ORDER

U.S. DEPARTMENT OF TRANSPORTATION
FEDERAL AVIATION ADMINISTRATION

SO 1770.23B

SOUTHERN REGION

7/28/95

SUBJ: ARTS IIA TELEPHONIC CASCADE

1. **PURPOSE**. This Order defines procedures for ARTS IIA Telephonic Cascade message dissemination.

2. **DISTRIBUTION**. This Order is distributed to the Branch level in the Regional Air Traffic Division, and all ARTS IIA facilities Hubs.

3. **CANCELLATION**: SO Order 1770.23A, Air Traffic Facilities/ARTS IIA and ARTS IIIA Telephonic Cascade, dated February 3, 1992, is canceled.

4. **ACTION**.

a. All ARTS IIA facilities shall review this Order and determine the facility from which they receive Cascade messages and their responsibilities in relaying these messages.

b. Upon receipt of a Cascade message, take action to relay it verbatim and without delay to:

(1) The facility Automation Staff.

(2) The Automation Staff at the next facility, in accordance with the appropriate Appendix to this Order.

The originating party shall preface the message with "THIS IS AN ARTS (IIA) CASCADE MESSAGE" and determine if the recipient is familiar with the procedures in this Order. If a member of the Automation Staff is not available, Cascade messages may be taken by any Management or Staff member at the receiving facility. In the event the caller cannot deliver the message to the next facility in the Cascade sequence, he/she shall continue the Cascade by calling the next facility(ies) in the series, according to the appropriate Annex. ASO-510 should be advised of this occurrence.

c. Messages received during other than normal administrative hours should be relayed to the facility ATM, if deemed appropriate.

5. **EXPLANATION OF CHANGES**. This Order has been revised to provide Cascade procedures for ARTS IIA facilities.

Gary W. Tucker
Manager, Air Traffic Division

Distribution: A-X(AT-3); FAT-0 (Supvr)

Initiated By: ASO-510

SO 1770.23A

Appendix 1

ARTS IIA Cascade

(date)

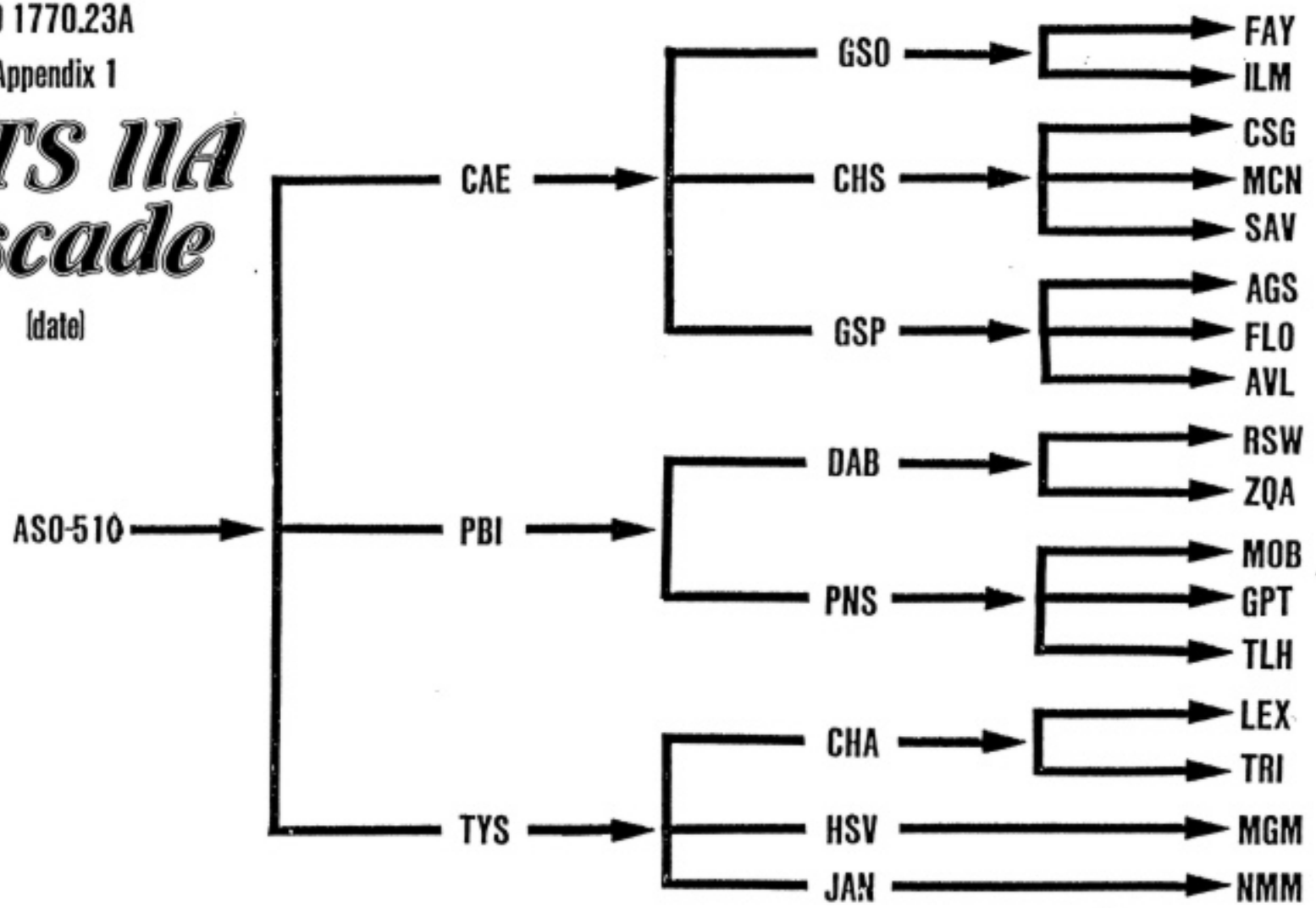

This chart depicts facility responsibilities for subsequent calls when the ARTS IIA Cascade is implemented. Example: West Palm Beach (PBI) is responsible to call Daytona Beach (DAB) and Pensacola (PNS). Daytona Beach is then responsible to call Ft. Myers (RSW) and Nassau, Bahamas (ZQA). RSW & ZQA have no calls to make.