Appendix B. Additional Guidance

Instructions for filling out the *LIR Lift Device Anchor Assessment*

Use the following URL (or scan the QR Code in paragraph 5 of Notice N JO 6850.118) to complete the assessment:

https://arcg.is/0KrKTy0

Complete one assessment for each ALSF/ALSF-2, DME, LDIN, MALS/MALSF/MALSR, ODALS, SSALR or RVR facility under your care. Complete an assessment even if the facility does NOT have any LIR Poles, or any tall enough to require a lifting device.

> **TIP:** Once an assessment is submitted, you should see a “Thank You” screen. At this screen you can hit your browser’s “Refresh” (↻) button to open a new assessment window.

Guidance for individual questions is as follows:

1. Facility ID (3-Letter Site Ident)

Use the unique facility identifier captured in FSEP to identify the site for which you are filling out the assessment. This Facility ID is often referred to as the site’s “3-letter ident” although in some cases the ID may be 4 letters long.

2. Runway Ident

Describe this facility’s position within the airport. Example: 35R/17L, or “south end.”

3. System Type

Select whether this facility is an ALSF/ALSF-2, DME, LDIN, MALS/MALSF/MALSR, ODALS, SSALR, or RVR facility.

4. Site Point of Contact

Enter the name of the primary maintainer of this facility or the SSC Manager if the facility has multiple maintainers.

5. Site Point of Contact Phone

This is the number AJW-152 will call to ask clarifying questions or, if applicable, to schedule upgrades. Make sure it matches the point of contact above and that the phone is typically answered/voicemail is typically checked. Extensions or emails may also be included here.

6. Does this site use Low-Impact Resistance (Orange Fiberglass) poles?

LIR Poles are made of Orange Fiberglass. See the images below. If your facility does not mount lights (or RVR/DME equipment) on LIR poles, mark no and the assessment is complete.

For Sites with LIR Poles

LIR Poles are approximately 6” in diameter and made of Orange Fiberglass. See Figure B-1 for assistance identifying Low Impact Resistance (LIR) poles.

MG-20 (Tilt-Down)



MG-20s over 12 feet should use Lifting Device

MG-30/40 (Tilt-Down)



MG-30s and MG-40s should use Lifting Device

MS (Suspended)



MS suspended poles do NOT use the Lifting device (they lower via pulleys)

Figure B-1. Examples of LIR poles and Mountings

Aluminum or Electro metallic poles do NOT count as LIR structures.

7. Total Number of LIR Poles at [your site name]

Count the number of Individual LIR poles at your site, including both suspended and tilt-down structures. If a station of lights is composed of multiple LIR poles (for example, the MALSR 1000-foot bar typically has a center pole and 2 wing poles), each individual pole counts for this question.

8. Total Number of MG (Tilt-Down) LIR Poles where the Lifting Device *does not* mount properly.

Do not count MS poles for this question. You are looking for MG-style poles above 12 feet tall that are either missing anchors or have anchors that are misaligned. Height estimates are acceptable. Therefore, any MG-20, MG-30, or MG-40 structures over ~12 feet tall with missing or misaligned anchors should be counted.

The easiest way to check if anchors are missing or misaligned, is to mount an LIR 5005R Lifting Device to the concrete pad. Figure B-2 shows a Lifting device that is properly mounted:

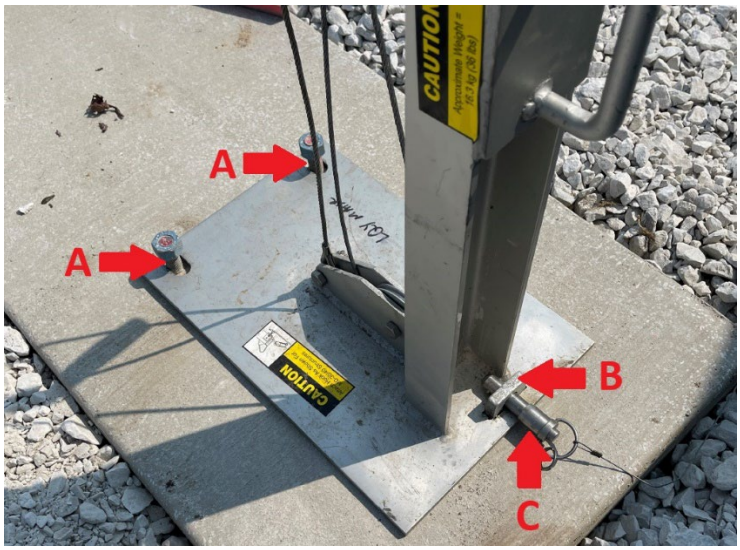

Figure B-2. L5005R Lifting Device Properly Secured

In order for a Lifting device to be considered properly mounted, the lifting device cannot have been modified in any way – no cutouts lengthened, no slots widened, no corners missing, etc. Also, the following conditions must be met:

a) The bolt channels of the Lifting Device must fit around the anchor bolts, tightly enough to prevent slipping out.

   NOTE: On MG 30/40 devices, the anchor bolts often double as supports for the third leg of the mounting frame. This is acceptable, as long as conditions (a), (b), and (c) are met.

b) The rear opening of the Lifting Device must slide comfortably over the rear tab when front is properly positioned & aligned.
c) The Lifting Device pin must be able to fit through the rear tab and secure the lifting device. An object with a smaller diameter (like a screwdriver) is NOT an acceptable substitute for meeting this condition.

If any of these conditions are violated when mounting the Lifting Device, the device does not mount properly and this LIR Pole/Concrete pad should be counted for this question.

If a lifting device cannot be obtained, Figure B-3 shows the required spacing for the three anchor points:

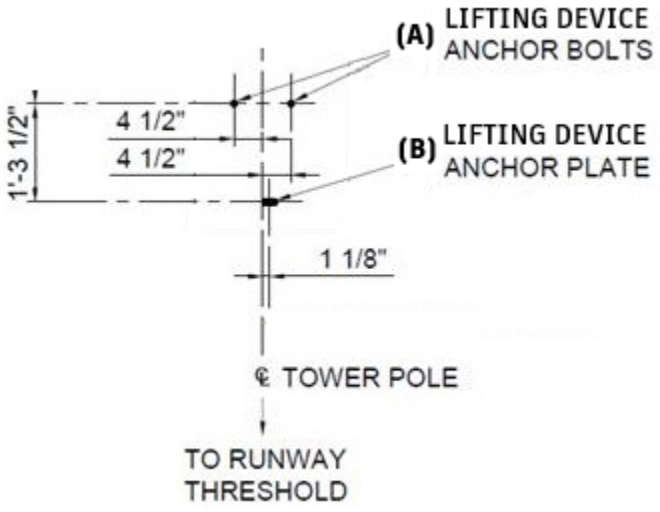

Figure B-3. LIR Tower Anchor Bolt Plan

Please note that the rear mounting tab is 1-1/8 inches off center by design, and that all 3 mounting points have less than < ¼ inch in tolerance in each direction. The hole of the mounting tab also needs to be at least ¼ inch above the concrete for the pin to fit through.

If any of these conditions are not met, the Lifting Device will not mount properly.