U.S. Department
of Transportation
**Federal Aviation Administration**

**Office of the Chief Counsel**

**800 Independence Ave., S.W.
Washington, D.C. 20591**

MAR 2 8 2016

Steve Lutjemeyer
Director of Quality Assurance
Shuttle America
8909 Purdue Road
Indianapolis, IN 46268

Re: Interpretation Concerning Use of a Minimum Equipment List (MEL) For Components Not Specifically Listed in the MEL and Whether a Missing Item Can Be Deferred in Accordance with the Non-essential Equipment and Furnishings (NEF) Process

Dear Mr. Lutjemeyer:

This is in response to your August 28, 2015 letter requesting an interpretation regarding the operation of an aircraft with missing items. You ask two questions. First, you ask whether MEL relief is appropriate under three different scenarios where there are missing parts, but the actual missing part is not on the MEL list. As explained below, MEL relief may be taken when a component of a system fails to perform its intended purpose (with the exception of warning/caution systems associated with the inoperative system), if that component is directly associated with and having no other function than to support the system specifically authorized relief by the MEL. Under such conditions, it is the system that is given relief. Second, you ask whether a missing Engine Fire Handle O-ring would be eligible to be deferred under the NEF program. As explained below, the answer is no.

**Question 1: Use of an MEL for components not specifically listed in the MEL**

With regards to your first question, you state that in scenario one, the E-170 passenger seat recline mechanism button is missing, which leads to a malfunctioning seat recline. Your MEL 25-21-10-2 states that the passenger seat recline mechanism "[m]ay be inoperative provided seat back is secured in the full upright position." You further state that the recline button is directly responsible for the function that is included in the Master Minimum Equipment List (MMEL).[1]

In scenario two, the E-170 Integrated Electronic Standby System (IESS) Standby Attitude Indicator was missing its STD button. Your MEL 34-11-00-1 states that the IESS Standby Attitude Indication "[m]ay be inoperative provided: a) All display units are operative, b) Operations are conducted in Day VMC only, and c) Operations are not conducted into known or

[1] An MMEL is a master list of aircraft items which may be inoperative under certain operational conditions, while maintaining the airworthiness of the aircraft and providing an acceptable level of safety. *See e.g.* http://fsims.faa.gov/PICDetail.aspx?docId=8900.1,Vol.4,Ch4,Sec3 at paragraph 4-680.

forecast over-the-top conditions." You state that with a missing STD button, the entire instrument is rendered inoperative since the flight crew cannot switch to the standard Barometric Pressure mode from the normal BARO-corrected altitude indication.

In scenario three, one half of a seat belt is missing. Your MEL 25-21-10-1 states that passenger seats "[m]ay be inoperative provided: a) the seat does not block an emergency exit, and b) the seat does not restrict any passenger from access to the main aircraft aisle, and c) the affected seat(s) are blocked and placarded 'DO NOT OCCUPY'." Your MEL also has a note that a seat with an inoperative seat belt is considered inoperative.

In these three scenarios, the FAA is guided by FAA Order 8900.1, Flight Standards Information Management System.[2] Volume 4, chapter 4, section 3, paragraph 4-683 of FAA Order 8900.1 states that "Definitions of the terms used in MMELs and MELs are found in MMEL Policy Letter (PL)-025."[3] MMEL Policy Letter (PL) 25, Revision 21 GC, definition number 19 states, "Inoperative instrument and equipment items, which are components of a system that is inoperative, are usually considered components directly associated with and having no other function than to support that system (warning/caution systems associated with the inoperative system must be operative unless relief is specifically authorized per the MMEL)."[4]

Therefore, an inoperative component of an item listed in the MEL causes the *entire* MEL item to be inoperative (not just the component) if the component is not specifically listed.[5] Thus, under your first scenario, it is the passenger seat recline mechanism that is given the MEL relief, not the passenger seat recline button. You may utilize MEL 25-21-10-2 for the passenger seat recline mechanism. Under scenario two, the entire IESS system is inoperative. Based on scenario 2 and the MEL relief example provided, you may utilize MEL 34-11-00-1.[6] In scenario three, the entire seat is inoperative and it is the seat, rather than the seat belt, that is given the MEL relief. You may utilize MEL 25-21-10-1 for the passenger seat.

**Question 2: Whether a missing Engine Fire Handle O-ring would be eligible to be deferred under the NEF program**

With regards to your second question, you state that the only function of this ring is to provide protection from dust, humidity or liquids from getting inside the housing of the unit. You also state that, according to the aircraft manufacturer, the O-ring has no effect on the function of the

---

[2] *See* http://fsims.faa.gov/PICResults.aspx?mode=EBookContents&restricttocategory=all~menu.
[3] http://fsims.faa.gov/PICDetail.aspx?docId=8900.1,Vol.4,Ch4,Sec3.
[4] *See* http://fsims.faa.gov/PICDetail.aspx?docId=PL-025.
[5] *See* http://fsims.faa.gov/PICDetail.aspx?docId=8900.1,Vol.4,Ch4,Sec3, at paragraph 4-684(A)(2)(e)(2) (stating that operators will typically list a MEL item exactly as it is shown in the MMEL. Some exceptions may include the following: "When an MEL item (e.g., an autopilot or satellite communications system) contains multiple components (e.g., switches or lights). Those components may be listed separately following the item in the MEL. For example, if a particular item has a switch, an operator could list that switch as an item on its MEL. This would allow just the switch to be inoperative. If the switch was not listed on the MEL and it became inoperative, the operator could not defer the switch individually. Instead, the autopilot itself would likely have to be deferred.").
[6] However, if MEL 34-11-00-2 were better described in the "Item" column to describe the relief to be effective for the STD Baro function, this relief would have been less onerous.

fire suppression handle or system. You further state that you were told by your CMT that the item was not eligible to be deferred under the NEF program since the O-ring was missing and there was no MEL relief.

The Engine Fire Handle O-ring is a subcomponent of a safety of flight item that is not deferrable or eligible to be included on your NEF list; the engine fire handle is part of the engine fire suppression system and affects the safety of aircraft operation, and it cannot fall under NEF, as "NEF are those items installed on the aircraft as part of the original certification, supplemental type certificate, engineering order, or other form of alteration that have no effect on the safe operation of flight and would not be required by the applicable certification rules or operational rules. They are those items that if inoperative, damaged or missing, have no effect on the aircraft's ability to be operated safely under all operational conditions."[7]

Any determination to add the missing O-ring as a deferrable item in the MMEL must be made by the FAA's Aircraft Evaluation Group (AEG) Flight Operations Evaluation Board (FOEB). In this case, the FOEB determined that the engine fire handle is part of the aircraft engine fire suppression system and is not authorized for MMEL relief.

I hope this information has been helpful. This response was coordinated with the FAA Flight Standards Service's Air Transportation Division (AFS-200), the Aircraft Maintenance Division (AFS-300), and the Seattle Aircraft Evaluation Group. If you have further questions concerning this response, please contact Sarah Sorg on my staff at 202-267-3073.

Sincerely,

Lorelei Peter
Assistant Chief Counsel for Regulations, AGC-200

[7] *See* http://fsims.faa.gov/wdocs/policy%20letters/pl-116_r3.htm. *See also* http://fsims.faa.gov/PICDetail.aspx?docId=8900.1,Vol.4,Ch4,Sec4 at paragraph 4-705.

SHUTTLE AMERICA
A REPUBLIC AIRWAYS COMPANY

August 28, 2015

Office of the Chief Counsel
800 Independence Avenue SW
Washington, DC 20591

Dear Sirs;

Shuttle America is requesting a legal interpretation of operating aircraft with missing items. The first three scenarios concerns missing parts on items that are listed in an approved MEL. The fourth scenario involves an item that we feel should meet the requirements of our NEF program.

The MMEL Policy Letter (PL) 25, Revision 21 GC, Definition # 19. "Inoperative Components of an Inoperative System", definition 19 states –

> ***19. <u>Inoperative Components of an Inoperative System</u>.*** *Inoperative instrument and equipment items, which are components of a system that is inoperative, are usually considered components directly associated with and having no other function than to support that system (warning/caution systems associated with the inoperative system must be operative unless relief is specifically authorized per the MMEL).*

We, as an operator, read this definition to mean that we can utilize an MEL[1] item when a component of a system fails to perform its intended purpose, with the exception of warning/caution components, even if the component of the system is not specifically listed in the MEL. To illustrate our position we offer the following scenarios.

- Scenario 1; E-170 Passenger seat recline mechanism button is found missing, which leads to a malfunctioning seat recline. (See Attachment 1) Our MEL 25-21-10-2 states -

| REV: 19 DATE: 03-13-15 | | | | System 25: Equipment / Furnishings | | | Shuttle America | |
|---|---|---|---|---|---|---|---|---|
| Sys/Seq Number | Tracking Number | Item | Normal Complement of Equipment | Minimum Equipment Required For Dispatch | Category | Remarks/ Exceptions | Placarding | Flight Crew Operating Procedure |
| 25-21-10 | -2 | Passenger Seat(s)<br>Recline Mechanism | - | 0 | D | (M) May be inoperative provided seat back is secured in the full upright position.<br>This Maintenance Deactivation procedure may be performed by the Flight Crew under direct, verbal communication with Maintenance Control.<br>***RMAT***<br>2011GL110098<br>Note: Compliance with the Maintenance Procedure must be documented in the aircraft logbook when MEL is initially issued. | Placard affected seat (s) "SEAT RECLINE INOP" | |

In this scenario the recline button is directly responsible for the function that is included in the MMEL. Passenger Seat Recline Buttons are installed to activate the recline actuator; with a missing button the seat recline function is

[1] Please note that the company MEL is FAA Approved, and this request does not include any reference to a system that is not listed in the MMEL for our aircraft type.

inoperative. This failure effect is no different than the failure of an internal part of the recline actuator that renders the system inoperative, therefore should be deferrable in accordance with MEL 25-21-10-2.

- Scenario 2; E-170 Integrated Electronic Standby System (IESS) Standby Attitude Indicator was found to be missing its STD button. (See Attachment 2) Our MEL 34-11-00-1, states -

| REV: 19 DATE: 03-13-15 | | System 34: Navigation | | | | | Shuttle America | | |
|---|---|---|---|---|---|---|---|---|---|
| Sys/Seq Number | Tracking Number | Item | Normal Complement of Equipment | Minimum Equipment Required For Dispatch | | Category | Remarks/ Exceptions | Placarding | Flight Crew Operating Procedure |
| 34-11-00 | -1 | Integrated Electronic Standby System (IESS) Standby Attitude Indication | 1 | 0 | B | May be inoperative provided:<br>a) All display units are operative,<br>b) Operations are conducted in Day VMC only, and<br>c) Operations are not conducted into known or forecast over-the-top conditions. | | Placard next to IESS | NOTE: FAR Part 1 states that "over- the- top " means above the layer of clouds or other obscuring phenomena forming the ceiling |
| 34-11-00 | -2 | Integrated Electronic Standby System (IESS) STD Baro | 1 | 0 | C | Maybe inoperative provided BARO knob on the IESS operates normally | | Placard next to IESS | |

In this scenario, with a missing the STD button, we feel that the entire instrument is rendered inoperative since the flight crew cannot switch to the Standard Barometric Pressure mode from the normal BARO-corrected altitude indication, therefore should be deferrable under MEL in accordance with 34-11-00-1.

- Scenario 3; Seatbelt, one half of a seatbelt is missing. Our MEL 25-21-10-1, states-

| REV: 19 DATE: 03-13-15 | | System 25: Equipment / Furnishings | | | | | Shuttle America | | |
|---|---|---|---|---|---|---|---|---|---|
| Sys/Seq Number | Tracking Number | Item | Normal Complement of Equipment | Minimum Equipment Required For Dispatch | | Category | Remarks/ Exceptions | Placarding | Flight Crew Operating Procedure |
| 25-21-10 | -1 | Passenger Seat(s) | - | 0 | D | (M) May be inoperative provided:<br>a) Seat does not block an emergency exit, and<br>b) Seat does not restrict any passenger from access to the main aircraft aisle, and<br>c) The affected seat(s) are blocked and placarded "DO NOT OCCUPY"<br>Note 1: A seat with an inoperative seatbelt is considered inoperative.<br>Note 2: Inoperative seats do not affect the required number of Flight Attendants.<br>Note 3: Affected seat(s) may include the seat(s) behind and/or adjacent outboard seats.<br>This Maintenance Deactivation procedure may be performed by the Flight Crew under direct, verbal communication with Maintenance Control.<br>***RMAT***<br>2011GL110008<br>Note 4: Compliance with the Maintenance Procedure must be documented in the aircraft logbook when MEL is initially issued. | | Placard affected seat(s) "DO NOT OCCUPY" | |

In this scenario we would MEL defer the passenger seat as inoperative. Note 1 of the MEL states: "A seat with an inoperative seatbelt is considered inoperative." With half the seatbelt missing the seatbelt would be considered inoperative therefore renders the seat inoperative and deferrable in accordance with MEL 25-21-10-1. It does not seem logical to strand passengers and ferry the aircraft to a maintenance location for repair when one half of a seat belt assembly is missing yet it is perfectly acceptable to operate the flight with the defective seat has been placed on MEL when the belt has damage that is out of limits.

We would like clarification as to why in the these three scenarios we would not be allowed to utilize the provision of the MMEL Policy Letter, Definition 19 to defer an item that is missing a part. It is our contention that definition # 19 was written to address these and many more scenarios just like this. We fully understand that through the FOEB process we can petition to add missing parts to each MEL item. However we do not see attempting to list every single item that could be missing on every component/system covered by the MMEL as a practical solution.

Scenario 4 involves a NEF deferral type item; Engine Fire Handle O-ring missing.
The only function of this o-ring is to provide protection from dust, humidity or liquids from getting inside the housing of the unit. The fire handle housing/unit is located on the overhead panel facing down so the possibility of dust or liquids entering the housing is remote. The O-ring has no effect on the function of the fire suppression handle or system according to the aircraft manufacturer. (See Attachment 3).

In this scenario we would review our NEF procedures and flow chart in our General Maintenance Manual. Our NEF Process Flow chart was developed directly from the FAA 8900.1 guidance. Following the flow chart (See Attachment 4) we would have determined that the O-ring would be eligible to defer in accordance with our NEF process, however was told by our CMT this item was not eligible to be deferred under the NEF program since the o-ring was missing and there was no MEL relief.

These four scenarios are actual events that have caused a number of conflicting discussions with our CMT as to what, if anything, can be missing and still operate an aircraft safely. Shuttle America takes great pride in operating safe, reliable, regulatory compliant aircraft carrying our passengers. As stated earlier, we fail to understand why it should matter why the item is inoperable as long as the aircraft can be flown safely without incident and the item can be deferred in accordance with an approved MEL or NEF process. Each of these four scenarios were also run through our risk analysis process and found to be low risk (Minor).

We respectfully request your input and clarification on this subject.

If you have any questions or need additional information concerning this issue, please feel free to contact me.

Sincerely,
Steve Lutjemeyer

Steve Lutjemeyer Digitally signed by Steve Lutjemeyer
DN: cn=Steve Lutjemeyer, o, ou, email=slutjemeyer@shuttleamerica.com, c=US
Date: 2015.03.23 13:47:51 -04'00'

Director of Quality Assurance
Shuttle America
8909 Purdue Road
Indianapolis, IN 46268
317-471-2338
slutjemeyer@shuttleamerica.com

Attachment 1
Seat Recline

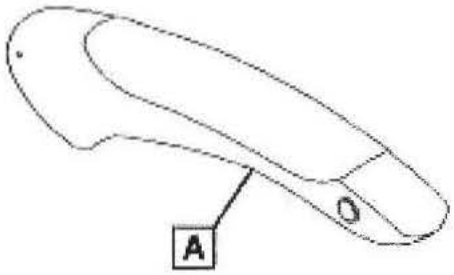


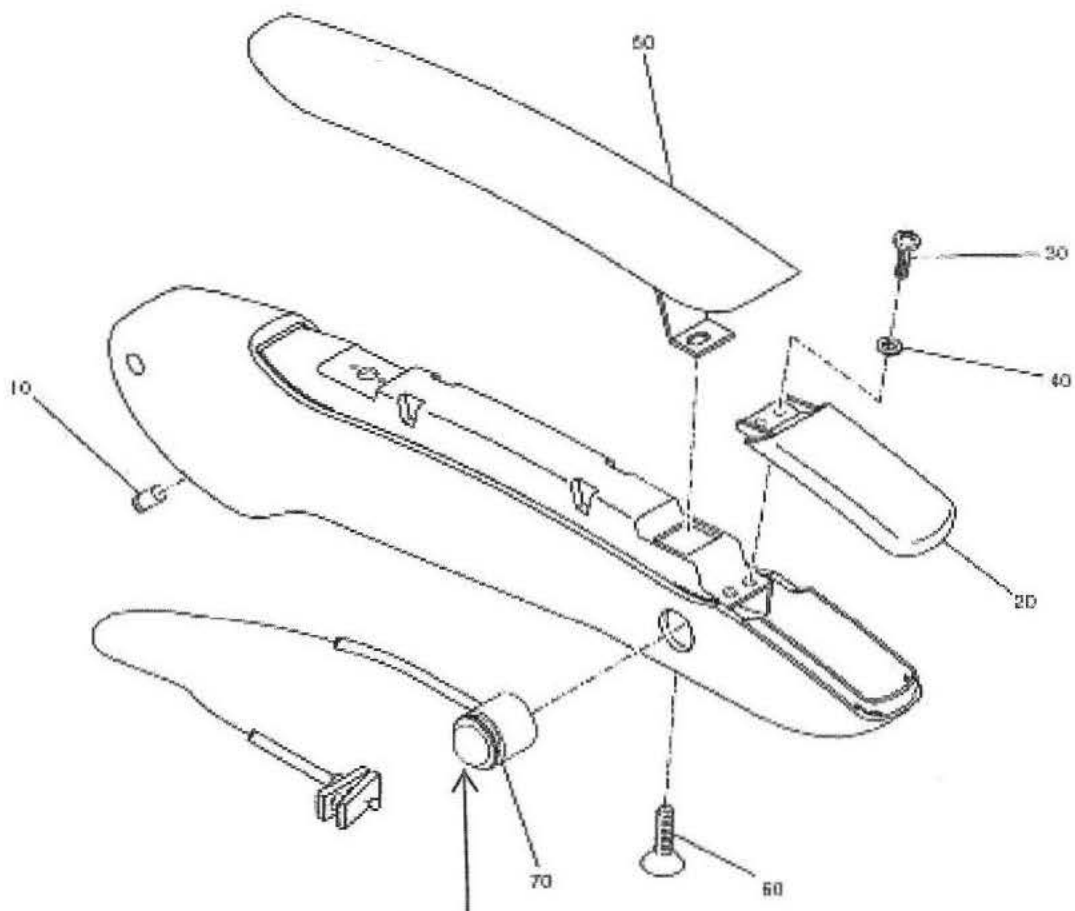

Attachment 2
IESS Indicator

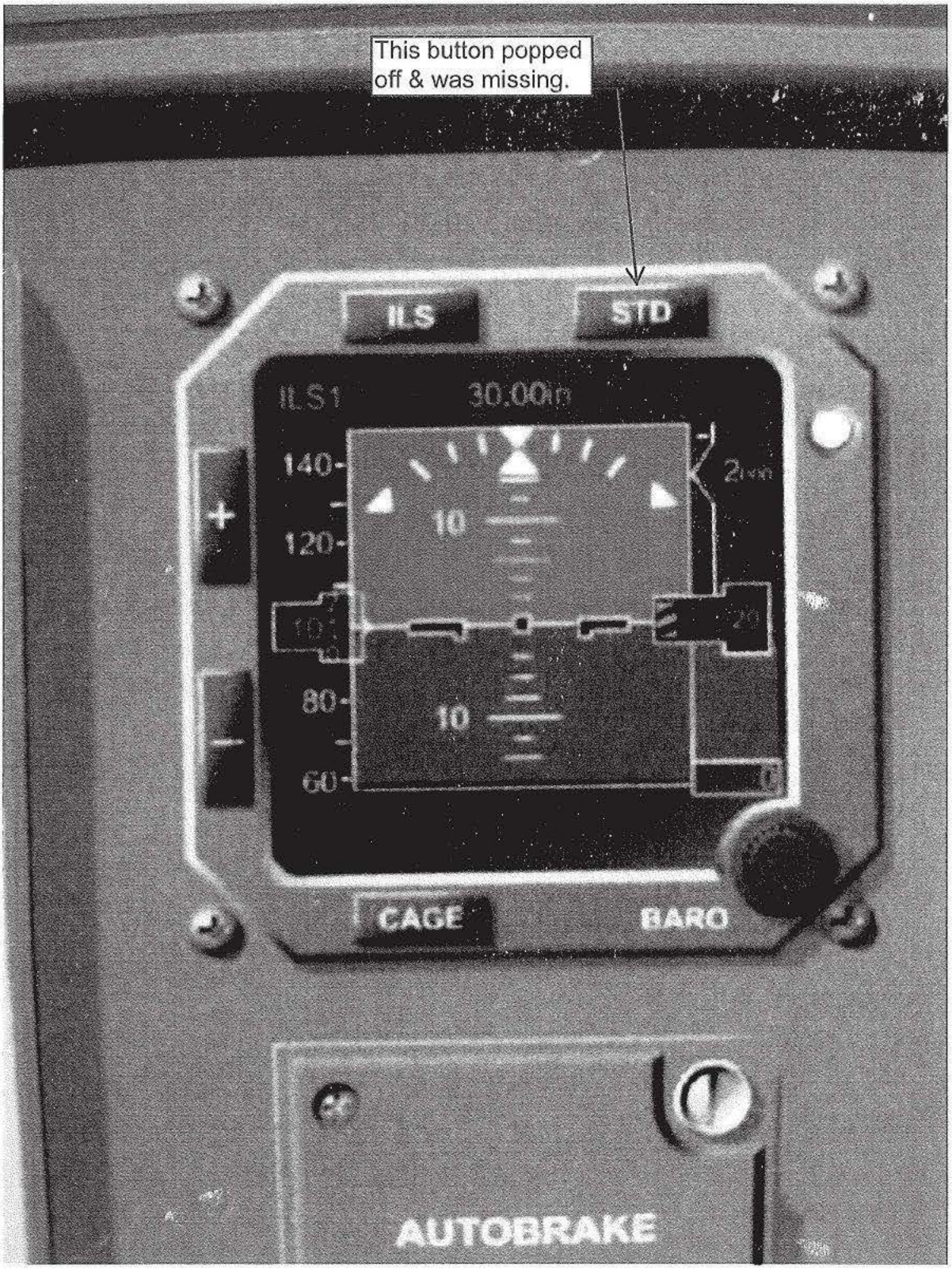

Attachment 3

**EMBRAER – Empresa Brasileira de Aeronáutica S.A.**
Av. Brigadeiro Faria Lima, 2170 – 12227-901 São José dos Campos - São Paulo – Brazil

# ETD2011-190/105089

REV.: /

Embraer Technical Disposition



## SUBJECT

**EMB 190 – S/N ALL – ATA 26-21 – Engine Fire Shutoff & Extinguishing Handle - Missing O-ring**

## CONTACT

**To:** Jon Payne
Customer Account Manager - Republic Airways
Embraer - Ft. Lauderdale
Phone: (317) 246-2641
Cell: (317) 379-5791

**From:** (RTS) Return To Service - Systems
Embraer Technical Support
AOG phone: +55 12 9121 2022
Office phone: +55 12 3927 3595
Office fax: +55 12 3927 4000

## IDENTIFICATION

| | | | | | |
|---|---|---|---|---|---|
| **Operator:** | Republic Airlines | | | **ATA:** 26-21 | |
| **A/C:** | EMB-190 | **A/C S/N:** | ALL | **FH:** N/A | **FC:** N/A |
| **P/N:** | J01250X200A20B8 | **Part S/N:** | N/A | **FH:** N/A | **FC:** N/A |

## RULES

• The technical disposition contained in this document is based solely on the data explicitly reported by the Operator. As no other information was provided by the Operator, Embraer assumes that the area/structural component(s) related to this technical disposition did not have any other previous damage and/or repair incurred to it. Therefore, Embraer disclaims any and all responsibility for incorrect, inaccurate or incomplete information provided by the Operator related to this matter.
• If the technical disposition contained in this document requires approval from the Local Regulatory Authority, please take the appropriate measures to obtain such approval.
• In case of any conflict between this document and any mandatory requirements issued by the Local Regulatory Authority, including but not limited to Airworthiness Directives, the Local Regulatory Authority document/orientation shall prevail.
• In case a structural repair affects a structure subject to an Airworthiness Directive or any other mandatory requirement issued by Local Regulatory Authority, Embraer strongly recommends the Operator to seek for an AMOC (Alternate Means of Compliance) within Local Regulatory Authority, even when the repair is followed by an ANAC form F200-06.
• This revision cancels and supersedes all the previous dispositions.

## REFERENCES

**Ref. A:** E-mail from Mr. Jonathan Payne dated September 15, 2011
**Ref. /B/:** IPC 26-21-01 Figure 1 Item 70/70A and 80/80A respectively for Engine 1 and 2
**Ref. /C/:** CMM 26-21-01 Figure 1002 Item 210A – O-ring 12.5X2 20B8 P/N J01250X200A20B8

## REVISION HISTORY

**Rev.:** Original Issue.

## DESCRIPTION

Republic Airlines reports events in which Engine Fire Shutoff & Extinguishing Handle O'ring (CMM 26-21-01 Figure 1002 Item 210) has been found missing in either Engine 1 or 2 positions. Customer

requests Embraer concurrence to continue revenue operation until next scheduled Basic Check upon finding issue date.

**DISPOSITION**

In attention to Republic Airlines request Ref /A/, Embraer has evaluated the Lever actuation function with the missing O-ring and it will not be jeopardized, and only a small play in the lever (when it is locked in the stowed position) is observed. Note that the Lever is still reachable in this condition as the maximum play inwards is the gap created from the missing O-ring protruded area out of the lever recess.

Supplier has also been contacted informing that the purpose of the O-ring in question is to provide protection from dust, humidity or liquids from getting inside the housing of the unit. As in the Ejets application the handle is installed in the upside down position the exposure for any liquid penetration is diminished.

Therefore, Embraer concurs to release Engine 1 and/or Engine 2 Fire Shutoff & Extinguishing Handle (Ref /B/) with missing O-ring (Ref /C/), until the subsequent basic check scheduled after issue date of the finding. During the basic check the affected handle (s) shall be replaced.

Embraer is pursuing with the supplier a procedure to allow installation of the O-ring on-wing as to avoid requirement to pull the handle during basic check. As soon as an update is made available Customer will be informed accordingly.

| This document was electronically signed by | **Claucio Oliveira** | on Sep 15th, 2010 |
|---|---|---|

### 5.13.4.5 NEF Process Flow

