CIVIL AERONAUTICS MANUAL 8

U. S. Department of Commerce — Civil Aeronautics Administration

Civil Aeronautics Manuals and supplements thereto are issued by the Office of Aviation Safety, Civil Aeronautics Administration, for the guidance of the public and are published in the Federal Register and Code of Federal Regulations.

CAA Library

Supplement No. 2 — November 15, 1951

Subject: 8.10
Eligibility for Type Certificate

The purpose of this supplement is to provide holders of Civil Aeronautics Manual 8 with amended policy concerning airworthiness requirements for special purpose aircraft and with a copy of Appendix B to Manual 8, entitled "Airworthiness Criteria for Agricultural and Similar Special Purpose Aircraft."

REMOVE AND DESTROY THE FOLLOWING PAGES:	INSERT IN LIEU THEREOF THE FOLLOWING PAGES:
8.0 and on the back 8.0-3(b)	8.0 and on the back 8.0-3(b)
8.10-3 and on the back 8.10-3	8.10-3 and on the back 8.10-3
	Appendix B

Office of Aviation Safety — E. S. HENSLEY, Director

RESTRICTED CATEGORY

§ 8.0 *Applicability of this part.* This part establishes standards for the issuance of type and airworthiness certificates for aircraft in the restricted category which are intended to be operated for agricultural, industrial, or other special purposes. This part also establishes operating limitations applicable to such aircraft.

§ 8.0–1 *Eligible special purposes (CAA interpretations which apply to § 8.0).* (a) The operating limitations specified in §§ 8.32 and 8.33 limit the special purposes for which an aircraft may be certificated in the restricted category under Part 8. Section 8.32 prohibits the carriage of persons or cargo for hire in restricted category aircraft. Section 8.33 prohibits the carriage of persons other than the crew during special purpose operations. A flight operation involving the carriage of persons or cargo under the conditions prohibited by §§ 8.32 or 8.33 will therefore not be considered an eligible special purpose for certificating the aircraft under the provisions of Part 8.

(b) The following are examples of special purpose operations considered to be within the applicability of Part 8:

Agricultural—spraying, dusting, and seeding; livestock and predatory animal control.

Forest and wildlife conservation.

Aerial surveying—photography, mapping; oil and mineral exploration.

Patrolling—pipelines, power lines, canals.

Weather control—cloud seeding.

Aerial advertising — skywriting, banner towing airborne signs and public address systems.

Appropriate combinations of such special purposes will also be eligible.

NOTE: A Certificate of Waiver or Authorization is required to conduct special purpose operations over certain areas (see §§ 8.31 and 8.31–1).

§ 8.0–2 *Applicability to aircraft previously certificated in the restricted category (CAA policies which apply to § 8.0).* (a) Aircraft which were certificated in the restricted category prior to the effective date of Part 8 (October 11, 1950) may at the option of the owner retain their existing certification status.

(b) Alternatively, aircraft previously certificated in the restricted category may be recertificated under Part 8 as follows:

(1) If the aircraft is not modified from its previously approved configuration, the applicant should apply for recertification in accordance with § 8.20–1 (a). The CAA representative, without further inspection of the aircraft, will issue a revised Operation Limitations Form ACA–309 (See § 8.30–1) indicating that the aircraft is certificated under Part 8. For agricultural aircraft the placard capacities of hoppers and tanks may be established and revised by the owner in accordance with § 8.10–4 (b). Repairs and alterations to such aircraft made after recertification under Part 8 will be handled in accordance with § 8.20–3.

(2) If the configuration of the aircraft is modified (i. e. a major alteration) from the previously approved configuration, the recertification procedure will be that specified in § 8.10–3.

(c) On or after October 11, 1950, an aircraft certificated for the first time in the restricted category must be certificated under Part 8, since previous restricted category requirements are rescinded on that date.

§ 8.0–3 *Applicability to aircraft certificated in a category other than restricted category (CAA policies which apply to § 8.0).* (a) Part 8 does not require an aircraft used for a special purpose to be certificated in the restricted category. An aircraft modified for a special purpose may therefore be certificated in a category other than the restricted category (e. g. normal, utility or acrobatic category), provided the modified aircraft fully complies with the airworthiness requirements for such category.

(b) An aircraft which has been previously modified and then certificated in a category other than restricted (as described in paragraph (a) of this section), may either retain its existing certification status or be recertificated in the restricted category under Part 8 in accordance with the procedure specified in § 8.0–2 (b). In the latter case, the CAA representative will issue both a revised Certificate of Airworthiness and revised Operation Limitations.

(c) An aircraft which has been previously type certificated in another category and then modified for a special purpose may be certificated in the restricted category in accordance with the procedure specified in § 8.10–3.

(d) An aircraft which has been certificated in the restricted category under Part 8 may be recertificated in another category when:

(1) The aircraft is restored to a configuration which is eligible for certification under an existing type certificate in such category, or

(2) Any changes from such configuration are shown to comply with the airworthiness requirements for the appropriate category.

(e) An aircraft may, however, be certificated in the restricted and other categories in accordance with the multiple airworthiness certification provisions of § 8.21.

§ 8.1 *Definitions.* (a) As used in this part, terms shall be defined as follows:

(1) *Administrator.* The Administrator is the Administrator of Civil Aeronautics.

(2) *Applicant.* An applicant is a person or persons applying for approval of an aircraft or any part thereof.

(3) *Approved.* Approved, when used alone or as modifying terms such as means, devices, specifications, etc., shall mean approved by the Administrator.

(4) *Authorized representative of the Administrator.* An authorized representative of the Administrator shall mean any employee of the Civil Aeronautics Administration or any private person, authorized by the Administrator to perform any of the duties imposed upon him by the provisions of this part.

§ 8.1–1 *Authorized representative of the Administrator (CAA interpretations which apply to § 8.1 (a) (4)).* The term "private person" mentioned in this section is interpreted to mean a Designated Aircraft Maintenance Inspector (DAMI), or a Designated Manufacturing Inspection Representative (DMIR). All such persons are issued a Certificate of Authority, Form ACA–1382, for the purpose of identification.

§ 8.10 *Eligibility for type certificate.* (a) Any aircraft of the following classifications shall be issued a type certificate in the restricted category, if the Administrator finds that no feature or characteristic of the aircraft renders it unsafe when operated in accordance with the limitations prescribed for its intended use:

(1) An aircraft type which has not previously been type certificated but which is shown by the applicant to comply with all of the airworthiness requirements of any other aircraft category prescribed in this subchapter, except those requirements which the Administrator finds inappropriate for the special purpose for which the aircraft is to be used; or

(2) An aircraft type which has been manufactured in accordance with the requirements of, and accepted for use by, a United States military service and subsequently modified for a special purpose, whether or not such aircraft has been issued a type certificate under the provisions of Part 9 of this chapter.

(b) A modification of a type certificate may be issued to an applicant for an aircraft which has been previously type certificated in another category and then modified for a special purpose when, upon inspection, the Administrator finds that the modifications conform to a good aeronautical practice and that no feature or characteristic of the aircraft renders it unsafe when operated in accordance with the limitations prescribed for its intended use.

§ 8.10–1 *Aircraft of a type not previously type certificated (CAA policies which apply to § 8.10 (a) (1)).* The following policies apply to the certification of new design restricted category aircraft which have not been type certificated or accepted for use by a U. S. military service.

(a) The applicant should submit an application for type certificate, Form ACA–312, in duplicate, to the appropriate CAA Regional Office, applying for a type certificate under this part. The CAA will issue a type certificate after the aircraft

has been shown to comply with appropriate airworthiness requirements.

(b) To establish the appropriate airworthiness requirements, the applicant may submit a proposal to the CAA Regional Office, Aircraft Division, in which he selects the airworthiness requirements of one of the standard categories (e. g. Normal or Utility in Part 3) as a basis, and indicates any requirements which he considers should be waived or modified for the special purpose involved. After examination of the applicant's proposal, the CAA will advise him of its acceptance as a basis for showing compliance, or specify the requirements which the CAA finds appropriate.

(c) In selecting and showing compliance with the appropriate airworthiness requirements the applicant may use as a guide, the information contained in Appendix B to this part, entitled "Airworthiness Criteria for Agricultural and Similar Special Purpose Aircraft."

§ 8.10–2 *Military type aircraft (CAA policies which apply to § 8.10 (a) (2)).* For certification in the restricted category, military aircraft are divided into three classes:

(a) *Military aircraft models previously type certificated in the limited category under part 9*

(1) For such aircraft, the certification procedure will be that specified in § 8.10–3.

(2) A list of military models that have been previously type certificated in the limited category is given in CAA Safety Regulation Release No. 277, "Status of Aircraft Certificated in the Limited Category."

(3) Compliance with the military technical orders listed on the CAA aircraft specifications will not be mandatory; however, the applicant should review the changes specified in these orders to determine if they are appropriate for the particular airplane and special purpose.

(b) *Military aircraft models previously type certificated under Part 4a.*

(1) Some military aircraft have been type certificated under Part 4a on the basis of required "conversion modifications" which are listed on the pertinent CAA aircraft specification. Such modifications will not be mandatory for certification under Part 8; however, the applicant should review the conversion modifications listed on the aircraft specification to determine if they are appropriate to the particular aircraft and special purpose.

(2) For such aircraft the certification procedure will be that specified in § 8.10–3.

(3) A listing of these military aircraft models is given in the CAA "Alphabetical List of Aircraft Specifications" which is included in the files of CAA Regional and District Offices, Aviation Safety Agents and Designated Aircraft Maintenance Inspectors.

(c) *Military aircraft models not previously type certificated in any category.* For military aircraft not covered by paragraphs (a) and (b) of this section, the certification procedure will be that specified in § 8.10–3 upon completing the following initial steps:

(1) The applicant should first submit a letter to the CAA, Aircraft Division, Washington 25, D. C., identifying the military model and the proposed special purpose, and requesting certification under Part 8.

(2) The CAA will check the military record of the aircraft type. If the record discloses unsafe characteristics, the CAA will inform the applicant of these, and the aircraft will not be eligible for certification unless they are corrected or can be compensated by operating restrictions. If the military record is considered satisfactory, the applicant will be so informed, and a type certificate issued for the basic type.

The certification procedure will then continue as specified in § 8.10–3.

§ 8.10–3 *Aircraft modified from a previously approved type (CAA policies which apply to § 8.10 (b)).* Under the provisions of §§ 8.10 (b) and 8.20 (a), a modification to the type certificate must be issued for an aircraft which has been previously type certificated in another category and then modified for a special purpose, in order to make the aircraft eligible for an airworthiness certificate in the restricted category. A

modification of the type certificate will be issued by means of Repair and Alteration Form ACA–337 upon completion of the procedure specified in paragraphs (a) through (f) of this section.

The term "another category", as used in § 8.10 (b), includes normal, utility, acrobatic, transport or limited categories, under Parts 3, 4a, 4b, 6, or 9 but does not include experimental. For aircraft previously certificated in the restricted category, see § 8.0–2.

(a) *Classes of modifications.* Since modifications may vary in scope from minor alterations to complete redesign of major components, the basis for determining the airworthiness of a modified aircraft will depend upon the nature and extent of the modification. For this purpose, modifications are divided into two classes:

(1) *Visual basis modifications.* Modifications in this class are those for which airworthiness can be determined by visual examination, using as guides the original design of the aircraft and available information on modification practices. (See § 8.10–4.)

The procedure for this class is given in paragraphs (b) through (f) of this section. The submittal of technical data, such as drawings and stress analysis, is not required; however, for some modifications of this class it may be desirable to obtain engineering advice.

Examples of this class are:

(i) The removal of a diagonal from a lower fuselage bay and substitution of equivalent bracing, installation of a hopper, and increase of engine weight and power, using information referenced in § 8.10–4 as a guide.

(ii) Reduction in span of a strut braced monoplane. In this case engineering advice should be obtained, since the loads in the wing spars may or may not be seriously changed, depending on the relative location of the strut attachment point in the original and modified designs. In such cases, the CAA will furnish technical assistance upon request by the applicant.

(2) *Design requirement modifications.* Some modifications may be so extensive that the original design of the aircraft and available information on modification practices no longer furnish a suitable basis for determining airworthiness.

An example is the conversion of a monoplane to a biplane, in which case the original design does not furnish an adequate basis of comparison for judging the structural strength of the new lift truss.

The airworthiness of this class of modifications should be determined in accordance with the applicable parts of the airworthiness requirements for new design aircraft, as specified in § 8.10–1 (b) or (c). Technical data or other proof of compliance should be submitted in accordance with those requirements.

(b) *Application.* The applicant should apply to a CAA Aviation Safety District Office, CAA Aviation Safety Agent, or a Designated Aircraft Maintenance Inspector (DAMI) who has been specifically authorized to perform restricted category certification, and request certification of the modified aircraft in the restricted category. The following documents should be submitted by the applicant:

(1) Duplicate copies of Repair and Alteration Form ACA–337. (See paragraph (d) of this section.) These forms are prepared by the agency performing the modification.

(2) Application for Airworthiness Certificate and/or Annual Inspection of an Aircraft Form ACA–305. (See § 8.20–1 (a).)

These forms are obtainable from all CAA Regional and District Offices and DAMI's. The applicant may consult with CAA or proceed with the modification prior to making formal application.

(c) *Performance of modification.* The modification to the aircraft should be performed by or under the supervision of an authorized agency (i. e., a certificated mechanic, or approved repair station having the proper ratings, or the manufacturer of the aircraft) as specified by § 18.10. Information for guidance in performing modifications is referenced in §§ 8.10–4 and 8.10–5.

(d) *Form ACA–337.* Two copies of Repair and Alteration Form ACA–337 should be prepared by the agency performing the modification, in accordance with the following:

APPENDIX B

AIRWORTHINESS CRITERIA FOR AGRICULTURAL AND SIMILAR SPECIAL PURPOSE AIRCRAFT

November 15, 1951

Table of Contents

Basis and Authority..... .0
Scope and Applicability..... .00
Safety Recommendations..... .01
Type Certificate..... .02
Airworthiness Certificate..... .03
Procedure for Showing Compliance..... .04
Inspection and Tests..... .05
Individual Certification..... .06
Certification of Series Aircraft..... .07
Changes..... .08
Minor Changes..... .080
Visual Basis Changes..... .081
Design Requirement Changes..... .082
Service Experience Changes..... .083
Definitions..... .09
General..... .090
Standard Atmosphere..... .0900
Airplane Configuration..... .0901
Weights..... .091
Empty Weight..... .0910
Maximum Weight..... .0911
Minimum Weight..... .0912
Power..... .092
Speeds..... .093
V_t..... .0930
V_{s_0}..... .0931
V_{s_1}..... .0932
V_{f_e}..... .0933
V_M..... .0934
V_d..... .0935
V_{n_e}..... .0936
Structural Terms..... .094
Structure..... .0940
Design Wing Area, S..... .0941
Design Wing Loading, W/S..... .0942
Limit Load..... .0943
Ultimate Load..... .0944
Factor of Safety..... .0945
Load Factor or Acceleration Factor, n .0946
Limit Load Factor..... .0947
Ultimate Load Factor..... .0948
Fire Prevention..... .095
Fireproof..... .0950
Fire-Resistant..... .0951
Flame-Resistant..... .0952
Flash-Resistant..... .0953
Inflammable..... .0954
Approved..... .096
Flight..... .1
Procedure..... .10
Weight and Balance..... .11
Empty Weight..... .110
Maximum Weight..... .111
Minimum Weight..... .112
Performance..... .12
Stalling Speeds..... .120
Stalling Speed Limit..... .121
Normal Climb..... .122
Flight Characteristics..... .13
Controllability..... .130
General..... .1300
Longitudinal Control..... .1301
Trim..... .131
Stability..... .132
Static Longitudinal Stability in Climb .1320
Static Directional and Lateral Stability..... .1321
Dynamic Stability..... .1322
Stalling..... .133
Level Flight Stalls..... .1330
Turning Flight Stalls..... .1331
Ground Characteristics..... .14
Longitudinal Stability and Control.. .140
Directional Stability and Control... .141
Shock Absorption..... .142
Flutter and Vibration..... .15
Strength Criteria..... .2
General..... .20
Loads..... .200
Applicability of Loads..... .2000
Factor of Safety..... .201
Strength and Deformations..... .202
Proof of Structure..... .203
Flight Loads..... .21
General..... .210
Design Air Speeds..... .2100
Load Factors..... .2101
Flight Load Factors..... .211
Wing and Wing Supporting Structure Design Conditions..... .212
Positive High Angle of Attack Condition..... .2120
Positive Low Angle of Attack Condition..... .2121
Negative Low Angle of Attack Condition..... .2122

Leading Edge Loadings..... .2123
Wing Loads in Landing..... .2124
Fuselage Design Conditions..... .213
Forward Fuselage Conditions..... .2130
Aft Fuselage Conditions..... .2131
Fuselage Section Between Wing Attach Points..... .2132
Fuselage to Wing Attach Points..... .2133
Dead Weight Items..... .2134
Control Surface and Control Surface Supporting Structure Design Conditions..... .214
Control System Design Conditions..... .215
Control Surface and System Tests..... .216
Supplementary Design Conditions..... .217
Engine Mount Loads..... .2170
Ground Loads..... .22
General..... .220
Design Landing Weight..... .221
Load Factor for Landing Conditions... .222
Landing Cases..... .223
Main Landing Gear Loads (Tail Wheel Type)..... .2230
Tail Wheel Loads (Tail Wheel Type)... .2231
Nose Wheel Type Gear..... .2232
Landing Gear Tests for Demonstrating Compliance..... .224
Nose Wheel Type Landing Gear Drop Tests..... .2240
Tail Wheel Type Landing Gear Drop Tests..... .2241
Landing Gear Wheels and Tires..... .225
Brakes..... .226
Design and Construction Standards.... .3
General..... .30
Special Factors..... .31
Control Surfaces and Systems..... .32
Flaps..... .320
Flutter Prevention Measures..... .33
Vision..... .34
Protection..... .35
Crew Protection,..... .350
Seats, Safety Belts or Harnesses..... .3500
Cockpit Hazards..... .3501
Cargo Provisions..... .3502
Toxic Materials..... .3503
Aircraft Protection..... .351
Corrosion Protection..... .3510
Dispensing Installations..... .3511
Aircraft Structure Covering..... .3512
Power Plant Installation..... .4
Engines..... .40
Propellers..... .41
Propeller Vibration..... .410
Propeller Pitch and Speed Limitations .411
Fuel System..... .42
Fuel System Arrangement..... .420
Fuel Flow Rate..... .421
Fuel Flow Rate for Gravity Feed Systems..... .4210
Fuel Flow Rate for Pump Systems..... .4211
Fuel Tanks..... .422
Fuel Tank Pressure Test..... .4220
Fuel Tank Installation..... .4221
Fuel Pump and Pump Installation..... .423
Fuel System Lines, Fittings, and Accessories..... .424
Fuel Strainer..... .4240
Oil System..... .43
Oil Tanks..... .430
Oil Tank Pressure Test..... .4300
Oil Tank Installation..... .4301
Oil System Lines, Fittings, and Accessories..... .431
Eugine Breather Lines..... .432
Cooling..... .44
Induction System..... .45
Induction System Anti-Icing Provisions..... .450
Carburetor Air Preheater Design..... .451
Exhaust System..... .46
Exhaust Manifold..... .460
Exhaust Heaters Used in Cabin Air Heating Systems..... .461
Fire Walls..... .47
Cowling..... .48
Power Plant Controls and Accessories .49
Power Plant Controls..... .490
Power Plant Accessories..... .491
Equipment..... .5
General..... .50
Required Equipment..... .51
Recommended Equipment..... .52
Design and Operating Limitations and Information..... .6
Design Limitations..... .61
Airspeeds..... .610
Never-Exceed Speed (V_{n_e})..... .6100
Maneuvering Speed (V_M)..... .6101
Flaps Extended Speed..... .6102
Powerplant..... .611
Maximum Weight..... .612

Airplane Center of Gravity..... .613
Operating Limitations..... .62
Markings and Placards..... .63
General..... .630
Airspeed Markings..... .631
Cockpit Control Markings..... .632
Powerplant Instrument Markings..... .633
Fuel Control Markings..... .634
Disposable Load Placards..... .635
Airplane Empty Weight and Balance Information..... .64
Identification Data..... .7

FIGURES

Figure .2100 Minimum Design Maneuvering Speed
Figure .2120 Design Limit Wing Loading
Figure .212(a) Distribution of Loading Between Upper and Lower Biplane Wings
Figure .212(b) Wing Flight Conditions
Figure .2123 Limit Leading Edge Loadings
Figure .2130 Typical Forward Fuselage Loading Diagram
Figure .2131 Typical Aft Fuselage Loading Diagram
Figure .214 Average Limit Control Surface Loadings
Figure .2170 Engine Torque vs. R.P.M.
Figure .222 Limit Load Factor For Landing Conditions
Figure .2230(a) Three-Point Landing Condition With Vertical Reactions (Tail Wheel Type)
Figure .2230(b) Level Landing With Inclined Reactions (Tail Wheel Type)
Figure .2230(c) Level Landing With Side Load (Tail Wheel Type)
Figure .2231(a) Three-Point Landing Condition With Vertical Reactions (Tail Wheel)
Figure .2231(b) Obstruction Load Condition (Tail Wheel)
Figure .2231(c) Side Load, Tail Wheel Free (Tail Wheel)
Figure .2231(d) Side Load, Tail Wheel Locked (Tail Wheel)
Figure .2232(a) Essential Dimensions of Tricycle Alighting Gear
Figure .2232(b) Three-Wheel Landing With Inclined Reactions (Tricycle Gear)
Figure .2232(c) Two-Wheel Landing With Vertical Reactions—Nose Up. (Tricycle Gear)
Figure .2232(d) Two-Wheel Landing With Inclined Reactions—Nose Down. (Tricycle Gear)
Figure .2232(e) Side Drift Landing (Tricycle Gear)
Figure .2232(f) Bending In Nose Strut (Tricycle Gear)
Figure .224 Minimum Free Drop Height

TABLES

Table .214 Average Limit Control Surface Loadings
Table .215 Limit Pilot Loads
Table .2230 Main Landing Gear Limit Loads (Tail Wheel Type)
Table .2231 Tail Wheel Limit Loads
Table .2232 Nose Wheel Type Landing Gear Limit Loads

APPENDIX B

Airworthiness Criteria for Agricultural and Similar Special Purpose Aircraft

.0 BASIS AND PURPOSE

These airworthiness criteria are issued by the Administrator as a guide whereby the applicant for a type certificate may select the appropriate airworthiness requirements for agricultural and similar special purpose aircraft in accordance with CAM 8.10-1. In accordance with CAR 8.10 (a) (1), these airworthiness criteria have been derived from Part 3 of the Civil Air Regulations, "Airplane Airworthiness—Normal, Utility, and Acrobatic Categories," as amended to July 1, 1951. Certain requirements of CAR 3 have been waived, modified, or presented in a different form, to provide criteria appropriate to the types of airplanes and operations provided in section .00 of this Appendix, and to simplify methods and procedures for showing compliance, in accordance with the objectives of CAR 8, as stated by the Civil Aeronautics Board in the preamble to that Part. (The Preamble is quoted in CAM 8.)

.00 Scope and Applicability. These criteria may be used as the basis for the issuance or modification of type certificates in the restricted purpose category of an aircraft intended to be operated for agricultural and similar special purpose operations. The criteria provided herein are applicable to single-engine airplanes intended for low speed dusting, spraying, and similar types of operations.

.01 Safety Recommendations. Several safety recommendations for consideration in the basic design of the aircraft are also included with these criteria. Additional suggestions and examples dealing with the safety aspects of agricultural aircraft and the dispensing installations are published in Appendix A to Civil Aeronautics Manual 8, entitled, "Restricted Category Aircraft Modifications."

.02 Type Certificate. An applicant will be issued a type certificate after the aircraft has been shown to comply with these airworthiness criteria together with procedural requirements described in Part 1 of the Civil Air Regulations. The procedure is further explained in CAM 8.10-1 and CAM 8.10-3 (a) (2) of Civil Aeronautics Manual 8.

.03 Airworthiness Certificate. An airworthiness certificate will be issued for aircraft type certificated in the restricted category under Civil Air Regulations 8.10 (a) (1) and subsequently manufactured under this type certificate when upon inspection of the airplane the Administrator determines that it conforms to the type design and is in condition for safe

operation, and has prescribed operating limitations in accordance with CAR 8.30 and CAM 8.30-1. The procedures for issuance of an airworthiness certificate are described in Parts 1 and 8 of the Civil Air Regulations and further explained in CAM 8.20-2 of Civil Aeronautics Manual 8.

.04 Procedure for Showing Compliance

(a) To expedite approval of the type design at least the following information whould be forwarded to the CAA in the early stages of the project:

(1) A general description of the airplane and any unusual or unconventional features therein, together with a three-view dimensional drawing.

(2) A statement of loading conditions to be used for major components. Where loading conditions differ from those specified in these criteria a complete description of the loadings used and their source are required.

(3) A statement outlining the method of analysis and tests to be conducted in substantiation of structural and powerplant items. This statement may be combined with the statement of (2) above if desired.

(b) Prior to certification, the applicant for a type certificate should either forward to or make available for review by the Administrator such other descriptive data, test reports, and computations as are necessary to demonstrate that the aircraft complies with these criteria. This technical information should be forwarded within three months after certification.

.05 Inspections and Tests. Representatives of the Administrator should have access to the airplane and may witness or conduct such inspections and tests as are necessary in complying with these criteria.

.06 Individual Certification. When an applicant requests certification of aircraft on an individual basis, he should show that the actual aircraft conforms to, or is conservative with respect to, the materials, dimensions, and other data used in the analytic or test reports.

.07 Certification of Series Aircraft. When the holder of a type certificate requests airworthiness certification of a series of aircraft by comparison with the basic type, he should have available sufficient drawings, jigs, templates, or sample parts to show that the series aircraft are equivalent to or better than the one originally type certificated, in respect to compliance with these criteria.

.08 Changes. Changes of the type design previously approved by the CAA are divided into the following classes:

.080 MINOR CHANGES. Minor changes which obviously do not impair the airworthiness of the aircraft need not be approved by the CAA.

.081 VISUAL BASIS CHANGES. Changes in this class are those for which the airworthiness may be determined by visual inspection by a representative of the Administrator and need not be substantiated by the submittal of technical data. However, a brief description of such modifications should be forwarded to the CAA for their reference file.

.082 DESIGN REQUIREMENT CHANGES. When changes other than those described in sections .080 and .081 are made, the altered aircraft should be shown to comply with the applicable airworthiness requirements.

.083 SERVICE EXPERIENCE CHANGES. When experience shows that any particular part or characteristic of the aircraft causes an unsafe condition, the Administrator may require appropriate changes to correct such condition.

.09 Definitions.

.090 GENERAL.

.0900 *Standard Atmosphere.* The standard atmosphere should be based upon the following assumptions:

(a) The air is a dry perfect gas.

(b) The temperature at sea level is 59°F.

(c) The pressure at sea level is 29.92 inches Hg.

(d) The temperature gradient from sea level to the altitude at which the temperature becomes -67°F. is -0.003566° F. per foot and zero thereabove.

(e) The density ρ_o at sea level under the above conditions is 0.002378 lbs. sec. ^{2}/ft.^{4}.

.0901 *Airplane Configuration.* This term refers to the position of the various elements affecting the aerodynamic characteristics of the airplane, such as landing gear and flaps.

.091 WEIGHTS.

.0910 *Empty weight.* (See section .111.)

.0911 *Maximum weight.* (See section .112.)

.0912 *Minimum weight.* (See section .113.)

.092 POWER. Take-off and maximum continuous power ratings are those established in accordance with CAR 13.

.093 SPEEDS.

Reference Sections

.0930 V_t —True air speed of the airplane relative to the undisturbed air.

In the following symbols having subscripts, V denotes:

(a) "Equivalent" air speed for structural design purposes equal to $V_t \sqrt{\rho/\rho_0}$.

(b) "True indicated" or "calibrated" air speed for performance and operating purposes equal to indicator reading corrected for position and instrument errors.

.0931 V_{s_0} —stalling speed, in the landing configuration.... .120(a)

.0932 V_{s_1} —stalling speed in the configuration specified for particular conditions..... .120(b)

.0933 V_{fe} —flaps extended speed..... .6102

.0934 V_M —design maneuvering speed..... .2100

.0935 V_d —design dive speed..... .2100

.0936 V_{n_e} —never exceed speed..... .6100

.094 STRUCTURAL TERMS.

.0940 *Structure.* Those portions of the airplane the failure of which would seriously endanger the safety of the airplane.

.0941 *Design Wing Area, S.* The area enclosed by the wing outlined (including ailerons and flaps in the retracted position, but ignoring fillets and fairings) on a surface containing the wing chords. The outline is assumed to extend through the nacelles and fuselage to the centerline of symmetry.

.0942 *Design Wing Loading, W/S.* The maximum weight of the airplane divided by the design wing area.

.0943 *Limit Load.* The maximum load anticipated in service.

.0944 *Ultimate Load.* The maximum load which a part of structure should be capable of supporting.

.0945 *Factor of Safety.* The factor by which the limit load should be multiplied to establish the ultimate load.

.0946 *Load Factor or Acceleration Factor, n.* The ratio of the force acting on a mass to the weight of the mass. When the force in question represents the net external load acting on the airplane in a given direction, n represents the acceleration in that direction in terms of the gravitational constant.

.0947 *Limit Load Factor.* The load factor corresponding to limit load.

.0948 *Ultimate Load Factor.* The load factor corresponding to ultimate load.

.095 FIRE PROTECTION.

.0950 *Fireproof.* "Fireproof" material means a material which will withstand heat equally well or better than steel in dimensions appropriate for the purpose for which it is to be used. When applied to material and parts used to confine fires in designated fire zones "fireproof" means that the material or part will perform this function under the most severe conditions of fire and duration likely to occur in such zones.

.0951 *Fire-Resistant.* When applied to sheet or structural members, "fire-resistant" material means a material which will withstand heat equally well or better than aluminum alloy in dimensions appropriate for the purpose for which it is to be used. When applied to fluid-carrying lines, this term refers to a line-and-fitting assembly which will perform its intended protective functions under the heat and other conditions likely to occur at the particular location.

.0952 *Flame-Resistant.* "Flame-resistant" material means material which will not support combustion to the point of propagating, beyond safe limits, a flame after removal of the ignition source.

.0953 *Flash-Resistant.* "Flash-resistant" material means material which will not burn violently when ignited.

.0954 *Inflammable.* "Inflammable" fluids or gases mean those which will ignite readily or explode.

.096 APPROVED. Approved, when used alone or as a modifying term, (such as approved methods, devices, specifications, materials, etc.) means approved by the Administrator.

.1 FLIGHT

.10 Procedure. Flight tests should be made to demonstrate the existence of satisfactory flight and ground handling characteristics. As a minimum measure of airworthiness, compliance with the standards specified in this section should be shown at the critical combination of weight and center of gravity within the range of either for which certification is desired.

.11 Weight and Balance. There should be established, as part of the type inspection, ranges of weight and center of gravity within which the airplane can be safely operated. Where comparatively large vertical movement of the center of gravity is allowed, consideration should be given to determining the effect on the flight characteristics.

.110 EMPTY WEIGHT. The empty weight and corresponding center of gravity location should include all fixed ballast, undrainable oil, full engine coolant, and hydraulic fluid.

.111 MAXIMUM WEIGHT. The maximum weight should not exceed any of the following:

(a) the weight selected by the applicant,
(b) the design weight for which the structure has been proven,
(c) the maximum weight at which compliance with the flight standards is demonstrated.

.112 MINIMUM WEIGHT. The minimum weight should not exceed the sum of the following:

(a) the empty weight

(b) the minimum cargo (170# in each seat)

(c) 1 gallon of fuel for every 12 maximum continuous horsepower for which the airplane is certificated,

(d) either 1 gallon of oil for each 25 gallons of fuel specified in (c) or 1 gallon of oil for each 75 maximum continuous horsepower for which the airplane is certificated, whichever is greater.

.12 Performance

.120 STALLING SPEEDS. The following should be determined using the procedure outlined in .1330(e):

(a) V_{S_0}—the stalling speed or the minimum steady flight speed with:

(1) engine idling, throttle closed (or not more than sufficient power for zero thrust),
(2) propeller in position normally used for take-off,
(3) landing gear extended,

(4) wing flaps in the landing position,
(5) cowl flaps closed,
(6) center of gravity in the most unfavorable position within allowable landing range,
(7) maximum weight.

(b) V_{S_1}—the stalling, or the minimum steady flight speed with:

(1) engine idling, throttle closed (or not more than sufficient power for zero thrust),

(2) propeller in position normally used for take-off, the airplane in all other respects (flaps, landing gear, etc.), in the particular condition existing in that particular test in connection with which V_{S_1} is being used,

(3) Maximum weight.

.121 STALLING SPEED LIMIT. The stalling speed at maximum weight in the configuration used during normal operations should not exceed 70 mph.

Recommendation.—Studies of forced landings show that, all other things being equal, the fatality rate is proportional to the stall speed, i.e., as the stall speed increases, the number of fatalities per accident increases. The record indicates that fatality rate increases rapidly above approximately 55 mph. Therefore, it is strongly recommended that the stall speed not exceed 55 mph in the landing configuration at maximum weight.

.122 NORMAL CLIMB. The steady rate of climb under sea level standard conditions should be at least 8 V_{S_1} or 300 feet per minute, whichever is greaeer, with:

(a) maximum weight,
(b) not more than maximum continuous power,
(c) landing gear fully retracted,
(d) wing flaps in the position selected by the applicant for the intended operation.

.13 Flight Characteristics

.130 CONTROLLABILITY

.1300 *General.* The airplane should be satisfactorily controllable and maneuverable during maneuvers appropriate to the intended operation including take-off, climb, level flight, dive, and landing, with or without power. It should be possible to make a smooth transition from one flight condition to another, including turns and slips, without requiring an exceptional degree of skill, alertness, or strength on the part of the pilot, and without danger of exceeding the limit load factor under all conditions of operation probable for the type.

Recommendation.—In cases where the control forces are considered marginally high the following limits are recommended:

	Type	*Pitch*	*Roll*	*Yaw*
(a) For temporary application.....	Stick	60	30	150
	Wheel	75	60	150
(b) For prolonged application.....		10	5	20

.1301 *Longitudinal Control.* (a) It should be possible at all speeds below 1.3 V_{S_1} to pitch the nose downward so that the rate of increase in air speed is satisfactory for prompt acceleration to 1.3 V_{S_1} with:

(1) maximum continuous power, the airplane trimmed at 1.3 V_{S_1},
(2) power off, the airplane trimmed at 1.4 V_{S_1},
(3) wing flaps and landing gear both extended and retracted.

(b) Demonstrations should be made to show that all reasonable changes in flap position and power can be made suddenly at any appropriate airspeed without requiring a change in trim control setting or the exertion of more control force than can be applied readily with one hand for a short period of time.

.131 TRIM. The means used for trimming the airplane should be such that, after being trimmed, and without further pressure upon or movement of either the primary control or its corresponding trim control by the pilot, the airplane will maintain:

(a) lateral and directional trim in level flight at the normal operating speed with the landing gear and flaps retracted,

(b) longitudinal trim during level flight at any speed from 1.3 V_{S_1} to 1.8 V_{S_1}, with landing gear retracted and with wing flaps in the position selected by the applicant for the intended operation.

.132 STABILITY. The airplane should be longitudinally, directionally, and laterally stable in accordance with the following sections. Suitable stability and control "feel" (static stability) should be required in other conditions normally encountered in service, if flight tests show such stability to be necessary for safe operation.

.1320 *Static Longitudinal Stability in the Climb.*

(a) From 1.2 V_{S_1} to 1.6 V_{S_1} the slope of the stick force curve should be stable and such that any substantial change in speed is clearly perceptible to the pilot through a resulting change in stick force with:

(1) wing flaps retracted,
(2) landing gear retracted,
(3) maximum weight,
(4) maximum continuous power,
(5) the airplane trimmed at 1.4 V_{S_1}.

(b) The friction within the control system should be such that the airspeed will return to within 10 percent of the original trim speed when the control force is slowly released from any speed from 1.2 V_{S_1} to 1.6 V_{S_1}.

.1321 *Static Directional and Lateral Stability*

(a) The static directional stability, as shown by the tendency to recover from a skid with rudder free, should be positive for all flap positions and power conditions, and for all speeds from 1.2 V_{S_1} up to the maximum permissible speed,

(b) The static lateral stability as shown by the tendency to raise the low wing in a side-slip, for all flap positions and power conditions, should:

(1) be positive at the maximum permissible speed,
(2) not be negative at a speed equal to 1.2 V_{S_1}.

(c) In straight steady sideslips, the aileron and rudder control movements and forces should increase steadily, but not necessarily in constant proportion, with increase in angle of sideslip. Rudder pedal forces should not reverse at any obtainable combination of sideslip and rudder angle.

(d) Sufficient bank should accompany sideslipping to indicate adequately any departure from steady unyawed flight.

.1322 *Dynamic Stability.* Any short period oscillation about any of the three primary axes occurring between stalling speed and maximum permissible speed should be heavily damped with the primary controls (a) free, and (b) in a fixed position.

.133 STALLING

.1330 *Level Flight Stalls.* (a) Stalls should be demonstrated under two conditions:

(1) with power off,
(2) with maximum continuous power.

(b) In either condition it should be possible, with flaps and landing gear in any position, with center of gravity in the position least favorable for recovery, and with appropriate airplane weights, to produce and to correct roll by unreversed use of the rolling control and to produce and to correct yaw by unreversed use of the directional control, during the maneuver described in (e), up to the time when the airplane pitches.

(c) A clear and distinctive stall warning should be unmistakably apparent to the pilot at a speed of 5 mph but not more than 10 mph above the stalling speed with flaps and landing gear in any position, both in straight and turning flight.

(d) During the recovery portion of the maneuver it should be possible to prevent more than 15 degrees roll or yaw by the normal use of the controls, and any loss of altitude in excess of 100 feet or any pitch in

excess of 30 degrees below level should be indicated on a placard in the cockpit and in clear view of the pilot.

(e) In demonstrating these qualities, the order of events should be:

(1) with trim controls adjusted for straight flight at a speed of approximately 1.4 V_{S_1}, reduce speed by means of the elevator control until the speed is steady at slightly above stalling speed, then

(2) pull elevator control back at a rate such that the airplane speed reduction does not exceed one mile per hour per second until a stall is produced as evidenced by an uncontrollable downward pitching motion of the airplane, or until the control reaches the stop. Normal use of the elevator control for recovery may be made after such pitching motion is unmistakably developed.

.1331 *Turning Flight Stalls.* When stalled during a coordinated 30° banked turn with 75 percent maximum continuous power, flaps and landing gear retracted, it should be possible to recover to normal level flight without encountering excessive loss of altitude, uncontrollable rolling characteristics, or uncontrollable spinning tendencies. These qualities should be demonstrated by performing the following maneuvers:

With the airplane in a coordinated 30° banked turn in level flight, the airspeed should be decreased by steadily and progressively tightening the turn with the elevator control until the airplane is stalled or until the elevator has reached its stop. When the stall has fully developed, recovery to level flight should be made with normal use of the controls.

Recommendation.—For aircraft designed for low speed flight, such as dusting, it is strongly recommended that the airplane be made as stall proof and spin proof as practicable.

.14 Ground Characteristics

.140 LONGITUDINAL STABILITY AND CONTROL. There should be no uncontrollable tendency to nose over in any operating condition reasonably expected for the type, or when rebound occurs during landing or take-off. Wheel brakes should operate smoothly and should exhibit no undue tendency to induce nosing over.

.141 DIRECTIONAL STABILITY AND CONTROL. (a) There should be no uncontrollable looping tendency in 90° crosswinds up to a velocity equal to 0.2 V_{S_0} at any speed at which the aircraft may be expected to be operated upon the ground.

(b) The airplane should be demonstrated to be satisfactorily controllable without exceptional degree of skill or alertness on the part of the pilot in power-off landings at normal landing speed and during which brakes or engine power are not used to maintain a straight path.

(c) Means should be provided for adequate directional control during taxiing.

.142 SHOCK ABSORPTION. The shock absorbing mechanism should not produce damage to the structure when the airplane is taxied on the roughest ground which it is reasonable to expect the airplane to encounter in normal operation.

.15 Flutter and Vibration. All parts of the airplane should be demonstrated to be free from flutter and excessive vibration under all speed and power conditions appropriate to the operation of the airplane up to at least the minimum value permitted for V_d flight in .2100. There should also be no buffeting condition in any normal flight condition severe enough to interfere with the satisfactory control of the airplane, or result in structural damage. However, buffeting as stall warning, is considered desirable and discouragement of this type of buffeting is not intended.

.2 STRENGTH CRITERIA

.20 General

.200 LOADS. The strength criteria of the following sections are specified in terms of limit and ultimate loads. Limit loads are the maximum loads anticipated in service. Ultimate loads are equal to the limit loads multiplied by the factor of safety.

.2000 *Applicability of Loads.* The air and ground loads specified in sections .21 and .22 are considered to be adequate for design of a conventional type aircraft suitable for agricultural and similar special purposes and may be used without further substantiation. For unconventional type aircraft for which little experience is available or for which it is evident that the loadings specified in the following sections are either unconservative or inapplicable, the applicant should propose suitable loading criteria for approval or comment by CAA. The term unconventional as used above refers to the basic design and Aerodynamic characteristics of the airplane as a whole and/or its major components and for which considerable experience and reliable test data are already available.

.201 FACTOR OF SAFETY. The factor of safety should be 1.5 unless otherwise specified.

.202 STRENGTH AND DEFORMATIONS. The structure should be capable of supporting limit loads without suffering detrimental permanent deformations. At all loads up to limit loads the deformation should be such as not to interfere with the safe operation of the airplane. The structure should be capable of supporting ultimate loads without failure for at least three seconds, except that when proof of strength is demonstrated by dynamic tests simulating actual conditions of load application, the three-second limit does not apply.

.203 PROOF OF STRUCTURE. Structural analysis may be used for proof of compliance with these criteria provided the structure conforms to types for which experience has shown such methods to be reliable. Structural static tests or dynamic tests, including flight tests, may also be used to demonstrate compliance with these criteria. If desired, combinations of structural tests, flight tests, and analyses may be employed. If static tests are used for proof of compliance, these tests should be carried to ultimate load unless supplemented by analyses. No material correction factor need be applied in cases of tests of structural components. If dynamic tests, including flight tests, are used for demonstration of compliance, they need only be carried to 1.15 times limit load and need not be supplemented by analyses. In the event that dynamic tests, including flight tests are employed, the aircraft used for the tests should be instrumented sufficiently to show that the design conditions have been met. In all cases certain portions of the structure should be subjected to tests as described in section .216.

.21 Flight Loads

.210 GENERAL. The flight loads specified may be considered to be independent of altitude and only the maximum design weight condition need be investigated. If loading conditions other than those specified are used, it should be shown that the level of safety specified will be met at all critical weights between the minimum design weight and the maximum design weight with any practicable distribution of disposable load within expected operating limits. The loads and loading conditions specified in the following sections are the minimum for which strength should be provided in the structure. These loads and loading conditions will generally cover loads incident to flight, but will not necessarily cover such loads as ground handling loads.

.2100 *Design Air Speeds.* Design air speeds include V_M(design maneuvering speed) and V_d (design diving speed). These speeds may be selected by the aircraft designer, except as follows: (a) the selected design diving speed need not be more than 1.50 V_M, but should not be less than 1.40 times V_M; (b) the design maneuvering speed should be at least equal to the speed obtained from Figure .2100 for the maximum wing loading W/S of the design.

.2101 *Load Factors.* The load factors specified in the following paragraphs represent load factors acting perpendicular or parallel as the case may be to the assumed longitudinal axis of the airplane. To obtain loads from the load factors specified, multiply the weight in pounds of the supported object by the load factor.

.211 FLIGHT LOAD FACTORS. The strength and deformation criteria of section .202 should be met for the airplane as a whole and the supports for dead weight items in the airplane at a limit positive vertical flight load factor of 4.2 and a limit negative vertical flight load factor of 1.0.

.212 WING AND WING SUPPORTING STRUCTURE DESIGN CONDITIONS. The primary wing structure and the structure affected directly by wing loads should meet the criteria of section .202 using the applied loads specified in sections .2120 through .2124. The wing may be assumed as a free body and the wing loads balanced by reactions at the wing to fuselage attach points. Although no specific unsymmetrical loading is specified, the wing structure should also be capable of sustaining unsymmetrical loads. See section .2134 for design loads on dead weight items and their supports. For biplane type airplanes, the distribution of loading between the upper and lower wings of the cellule may be found from Figure .212a. Figure .212b illustrates the wing loading conditions of sections .2120, .2121, and .2122.

.2120 *Positive High Angle of Attack Condition.* A limit loading per square foot of wing area, with upward and forward acting components, should be uniformly distributed over the wing span. The upward acting component should be equal to the maximum value of W/S multiplied by the positive

flight load factor of section .211 and should act perpendicular to the basic wing chord plane. The forward acting component should be 30 percent of the perpendicular loading and should act parallel to the basic wing chord plane. The chordwise center of pressure for this loading should be at 20 percent of the wing chord. (For convenience wing applied loads in pounds per square foot are given in Figure .2120 in terms of W/S and load factor.)

.2121 *Positive Low Angle of Attack Condition.* A limit loading per square foot of wing area, with an upward acting component, should be uniformly distributed over the wing span. This component should be equal to the maximum value of W/S multiplied by the positive flight load factor of section .211 and should act perpendicular to the basic wing chord plane at 60 percent of the wing chord. Although no aft acting chordwise loading is specified, the structure should be capable of sustaining aft acting chordwise loads.

.2122 *Negative Low Angle of Attack Conditions.* Strength should be provided for downward limit loading uniformly distributed over the wing span equal to the maximum wing loading, W/S, multiplied by the negative flight load factor specified in section .211. The chordwise center of pressure of this wing loading should be at 40 percent of the wing chord.

.2123 *Leading Edge Loadings.* The portion of the wing structure forward of the front spar or forward of the 20 percent wing chord point, if no front spar is provided, should meet the strength criteria of section .202 using the loading specified in Figure .2123 uniformly distributed over the wing span and applied separately in both the up and down direction.

.2124 *Wing Loads in Landing.* When the main landing gear is supported in the wing, the primary wing structure should be designed for the following applied loads:

(a) The loads from Table .2230 if the airplane has a tail wheel type landing gear, or

(b) The loads from Table .2232, Cols. 2, 3 and 4, if it has a nose wheel type gear.

The main wheel vertical and horizontal loads may be assumed to be balanced by concentrated loads at the wing to fuselage attach points. This condition will be critical only for the wing structure between the landing gear to wing attach points on opposite sides of the airplane.

.213 FUSELAGE DESIGN CONDITIONS. The primary fuselage structure and the supporting structure for dead weight items located in the fuselage should meet the criteria of section .202 under the applied loads specified in section .2130 through .2134. The local supporting structure for the empenage, the control system, the engine, and the landing gear (if installed on the fuselage), should be designed for the most critical loadings specified in sections .214, .215, .2170, and .22 respectively.

.2130 *Forward Fuselage Conditions.* The portion of the fuselage forward of the front main wing attach point should be designed for the applied loads specified in (a), (b), (c), and (d) below, acting independently. The loads from the dead weight items in the forward fuselage may be assumed to be uniformly distributed over the forward fuselage length with the exception of the engine weight load which may be assumed to be concentrated at the engine c.g. if the engine is in the fuselage. The weight distribution corresponding to maximum forward c.g. should be used for all conditions specified in this section. See Figure .2130 for a typical forward fuselage loading diagram.

(a) Down Load.—Downward loads from an inertia load factor of 4.2 should be used in the condition.

(b) Up Load.—Upward loads from an inertia load factor of 1.0 should be used in this condition.

(c) Side Load.—Sideward loads from an inertia load factor of 1.0 should be used in this condition.

(d) Supplementary Loads.—When equipped with a nose wheel type landing gear, sufficient strength should be provided for the nose wheel loads specified in Table .2232, Col. 5, using: (a) only the sideward and upward load components, and (b) only the forward and upward load components. The inertia load factor should be assumed equal to zero.

.2131 *Aft Fuselage Conditions.* The portion of the fuselage aft of the rear main wing attach point should be designed for the applied loads specified in (a), (b), (c), and (d) below, acting independently. For simplicity the loads from the dead weight items in the aft fuselage may be assumed to be uniformly distributed over the aft fuselage length with the exception of the empenage dead weight which may be assumed to be concentrated at the empenage c.g. The weight distribution corresponding to maximum aft c.g. should be used for all conditions specified in this section. See Figure .2131 for a typical aft fuselage loading diagram.

(a) Down Load.—Downward loads from an inertia load factor of 4.2 combined with the maximum down tail load of section .214 should be used in this condition.

(b) Up Load.—Upward loads using the maximum up horizontal tail load of section .214 should be used in this condition. The vertical inertia load factor may be assumed to be zero.

(c) Side Load.—Sideward loads from an inertia load factor of 1.0 combined with the maximum vertical tail load of section .214 should be used in this condition. In analyzing for this condition, proper allowance should be made for the torsion which will exist when the center of pressure of the vertical surface is above the fuselage elastic axis.

(d) Supplementary Load.—When equipped with a tail wheel type landing gear, sufficient strength should be provided in the primary fuselage structure for the tail wheel loads specified in Table .2231, Col. 2, and Col. 3. The inertia factor should be assumed equal to zero.

.2132 *Fuselage Section Between Wing Attach Points.* The portion of the fuselage structure between the front and rear main wing attach points should be designed for the critical loadings from either section .2130 or section .2131, whichever is greater. For convenience, the maximum loads (bending moment, shear, torque) at the front or rear attach points found from these sections may be assumed constant throughout the entire section. When large items of mass, such as hoppers, cargo compartments, etc. are located in this region, the local loads due to these installations should be combined with the overall loads in a conservative manner.

.2133 *Fuselage to Wing Attach Points.* The fuselage to wing attach points and fuselage structure directly affected should be designed for the critical loads of sections. 2120, .2121, .2122, and .2124 when the landing gear is attached to the wing. Conservative assumption should be used for the distribution of drag load to the attach points. Although no unsymmetrical loading is explicitly specified, sufficient strength should be provided at the attach points and in the carry-through structure for unsymmetrical loads.

.2134 *Dead Weight Items.* The local supporting structure for dead weight items should be designed for the following limit loads applied independently:

(a) Down Loads = 4.33 x weight of item in pounds
(b) Up Loads = 1.0 x weight of item in pounds
(c) Fwd. & Aft = 1.0 x weight of item in pounds
(d) Side = 1.0 x weight of item in pounds

Since items of mass located away from the airplane c.g. sustain higher load factors due to unbalanced pitching, or yawing moments, conservative assumptions should be made with regard to the design loads imposed on their supporting structure. See section .2170 for loads on engine mounts and sections .3510 and .3512 for loads imposed during minor crashes.

.214 CONTROL SURFACE AND CONTROL SURFACE SUPPORTING STRUCTURE DESIGN CONDITIONS. (a) The control surface and the supporting structure directly affected by the control surface loads should meet the criteria of section .202 using the limit loadings and distribution in Table .214. Note that only symmetrical loadings are specified; the structure should be capable of sustaining unsymmetrical loadings when such loadings might produce a more critical design condition than those specified.

(b) If the distribution of loading on the movable surface of (a) above results in hinge moments greater than those corresponding to the pilot forces specified in section .215 below, this distribution may be modified as necessary to reduce the hinge moments, but the total loads on the fixed and movable surfaces should remain that of (a).

.215 CONTROL SYSTEM DESIGN CONDITIONS. (a) The controls and the control system and the parts of the structure directly affected by control system loads should meet the criteria of section .202 under the limit pilot loads specified in Table .215 on following page.

Table .215.—Limit Pilot Loads

Control		Design Limit Load
Aileron.....	Stick	67 pounds
	Wheel**	53 D* inch-pounds
Elevator.....	Stick	167 pounds
	Wheel	200 pounds
Rudder.....	.....	200 pounds

*D = Diameter of control wheel.

**The control wheel, its attachment and affected parts of the control column should also be designed for a single tangential force having a limit value equal to 1.25 times the couple force determined from the above criteria.

.216 CONTROL SURFACE AND SYSTEM TESTS. With the control surface loaded so as to produce the pilot effort forces specified in section .215, the controls may be operated through their full range of travel. In the test there should be no jamming and the deflection should not exceed 30 percent of the full control surface travel of the unloaded surface. If the pilot effort forces produce surface loadings in excess of the design surface loads of section .214, then the surface may be loaded so as to produce the loadings of section .214 and the difference between this loading and the pilot effort forces may be applied to the system at the control surface horn.

.217 SUPPLEMENTARY DESIGN CONDITIONS

.2170 *Engine Mount Loads.* Engine mounts and the structure directly affected by loads on the engine mount should meet the criteria of section .202 under the limit loads specified in (a) and (b) below.

(a) Engine torque loads as specified in Figure .2170 combined with the loads on the mount resulting from the airplane acceleration specified in section .2120.

(b) Side loads resulting from a lateral acceleration of the airplane equal to 1.5g.

.22 Ground Loads. The limit loads specified in the following subsections are external loads and may be used directly for design purposes in lieu of loads based on more rational criteria.

.220 GENERAL. In general, except as noted in other sections, the ground loads specified below should be used only for the design of the landing gear and its local supporting structure.

.221 DESIGN LANDING WEIGHT. The design weight used in the landing conditions should be equal to or greater than the maximum gross weight used for the structural design of the airplane for flight loads.

.222 LOAD FACTOR FOR LANDING CONDITIONS. The strength and deformation standards of paragraph .202 should be met for the airplane as a whole at a limit load factor given in Figure .222.

.223 LANDING CASES. The landing gear and the structure affected by loads on the landing gear should meet the criteria of section .202 under the loads resulting from the following cases.

.2230 *Main Landing Gear Loads (Tail Wheel Type).* The landing cases specified in Table .2230 and described in Figure .2230 apply to the main landing gear tail wheel type.

.2231 *Tail Wheel Loads (Tail Wheel Type).* The landing cases specified in Table .2231 and described in Figure .2231 apply to the tail wheel. Only the aft fuselage (section .2131) and local tail wheel supporting structure need be investigated for these loads.

.2232 *Nose Wheel Type Gear.* The landing cases specified in Table .2232 and described in Figure .2232 apply to landing gear of the nose wheel type.

.224 LANDING GEAR TESTS FOR DEMONSTRATING COMPLIANCE. Compliance with the landing condition standards of section .22 may be demonstrated by free drop tests of the complete assembled airplane if the complete airplane is dropped at least twice from the drop height specified in Figure .224 in each of the following attitudes without detrimental permanent set.

.2240 *Nose Wheel Type Landing Gear Drop Tests.* Airplanes equipped with nose wheel type gear should be dropped:

(a) In the full nose-up attitude onto a level platform.

(b) In the level attitude, with the center of gravity in its most forward position, onto platforms under the main and nose wheels and inclined at an angle $18^{\circ}\ 16^{1}$ up and forward.

(c) In the level attitude onto platforms under the main wheels only and inclined as in (b). The nose wheel should not be allowed to contact in this test.

.2241 *Tail Wheel Type Landing Gear Drop Tests.* Airplanes equipped with tail wheel type gear should be dropped:

(a) In the three-point landing attitude on a level surface.

(b) In the level attitude onto a level platform. The main gear only should be allowed to contact during this test.

(c) The level attitude onto platforms under the main wheels only and inclined at an angle of $18^\circ\ 16^1$ up and forward. The tail gear should not be allowed to contact in this test.

.225 LANDING GEAR WHEELS AND TIRES. Main and nose landing gear wheels should be of an approved type. The main wheels and tires should have static ratings equal to or greater than the gross weight of the airplane divided by the number of main wheels. The nose wheel and tire should have a rating (tire rating to be compared with the dynamic rating established for such tires) equal to or greater than the load obtained assuming a force of 1g downward and .31 g forward acting at the center of gravity of the airplane.

.226 BRAKES. If brakes are installed, they should be adequate for speed control during taxiing and should be capable of preventing the aircraft from rolling while applying full engine take-off power.

.3 DESIGN AND CONSTRUCTION STANDARDS

.30 General. The structure and all mechanisms essential to the safe operation of the airplane should not incorporate design details or be constructed of materials which experience has shown to be unreliable or otherwise unsatisfactory. The use of standard parts and approved components is recommended.

.31 Special Factors. If analysis is used to prove the strength of fittings, the loads specified in section .2 should be multiplied by an additional factor of 1.15. Castings used in primary structural parts should be designed for loads exceeding the loads specified in section .2 by a factor of 2.00 unless special quality control measures for such castings are established. To account for wear and other service problems, bearing surfaces of control surface hinges should have strength for loads appreciably in excess of the design loads of section .2 unless lubricated ball or roller bearings are incorporated.

.32 Control Surfaces and Systems

.320 FLAPS. The motion of flaps on either side of the airplane should be synchronized by a positive interconnection unless it is shown by flight test that the airplane has safe characteristics with the flaps extended on one side only.

.33 Flutter Prevention Measures. Wing, tail surface, control systems and other structural parts should be free from flutter at all speeds up to V_d as defined in section .2100.

One of the following means may be used in showing compliance:

(a) a satisfactory flutter analysis may be submitted,

(b) the standards of CAA Airframe and Equipment Engineering Report No. 45 "Simplified Flutter Prevention Criteria for Personal Type Aircraft" may be met, or (c) flight flutter tests may be conducted to show that a flutter condition would not develop at speeds up to V_d.

.34 Vision. The pilot compartment should be arranged to afford the pilot a sufficiently extensive clear and undistorted view for the safe operation of the airplane. An unobstructed range of pilot view in an arc 90 degrees each side of the airplane center line and 20 degrees from the horizontal down over the nose is recommended.

.35 Protection

.350 CREW PROTECTION

.3500 *Seats, Safety Belts or Harnesses.* Sufficient strength should be provided in the seat and seat installation and in the attachment for safety

belt and/or harness for crash landings in which it is assumed that the following ultimate acceleration forces are acting separately on the occupants:

(a) Forward —9.0
(b) Sideward—3.0
(c) Vertical—6.0 (Down)
3.0 (Up)

The weight of a crew member should be assumed to be at least 180 pounds.

Recommendation. The military services have found that crash injuries and fatalities can be greatly reduced by providing cockpit structures, safety belt, shoulder harness and seat installations which can withstand a forward acting acceleration force on the occupants of 20 g or more. It is suggested that similar provisions be incorporated in agricultural aircraft.

.3501 *Cockpit Hazards.* Protrusions, knobs, sharp corners or other objects which are likely to be contacted by the crew in the event of a minor crash should be suitably padded or constructed so as to minimize the likelihood of serious injuries to the crew. If shoulder harnesses or equivalent means are provided to retain the crew in position in minor crashes, no padding or similar provisions need be provided.

.3502 *Cargo Provisions.* It is recommended that heavy items of mass, such as dust or spray containers, be so located or installed in such a manner that they will not shift and injure the crew under crash conditions. The items themselves and the supporting structure for such items located aft of or in the immediate vicinity of the cockpit should be designed to restrain these items and their contents when subjected to the crash acceleration specified in section .3500.

.3503 *Toxic Materials.* If toxic materials are to be carried or dispersed by the aircraft suitable provisions for ventilating the cockpit to minimize the hazard to the crew from the toxic materials should be provided. Compartments containing toxic material containers and lines should comply with the ventilation and drainage criteria of section .3511.

.351 AIRCRAFT PROTECTION

.3510 *Corrosion Protection.* All members of the structure should be suitably protected against deterioration or loss of strength in service due to weathering, corrosion, abrasion or other causes. Due to the corrosive nature of some dusts and sprays used in agricultural operation, the design should be such as to reduce entry of these materials into interiors of wings, fuselage, etc.

.3511 *Dispensing Installations.* Compartments containing flammable material containers and lines should be free of ignition sources and should be provided with adequate ventilation and drainage to assure that no hazardous accumulation of flammable liquids or vapors can occur. Containers

of flammable materials should be vented overboard and provided with positive seal filler caps. All flammable material discharge, vent, and drainage points should be located so as to obviate possible ignition from engine exhaust or other source. Care should be taken to provide leak proof seams and connections. All metal components, including equipment items of the airplane, should be electrically bonded by means of a flexible conductor attaching the component to the basic structure of the airplane.

All liquid containers should be baffled so as to prevent rapid movement of the container contents and adverse aircraft center of gravity shifts. The containers should be designed for and subjected to a pressure test in which a limit pressure of H/6.5 psi is applied to the closed tank where H equals the depth of the tank in inches when the airplane is in level position. In no case should the limit pressure be less than three pounds per square inch.

.3512 *Aircraft Structure Covering.* Where flammable materials can impinge directly on surfaces of the airplane during dispensing operations, such surfaces should be at least flame resistant.

.4 POWERPLANT INSTALLATION

All components of the powerplant installation should be constructed, arranged, and installed in a manner which will assure the continued safe operation of the airplane and powerplant. Accessibility should be provided to permit such inspection and maintenance as is necessary to assure continued airworthiness.

.40 Engines. Engines installed in certificated airplanes should be of a type which has been certificated in accordance with the provisions of Part 13, "Aircraft Engine Airworthiness," or should be military approved aircraft engines.

.41 Propellers. Propellers installed in certificated airplanes should be of a type which has been certificated in accordance with the provisions of Part 14, "Aircraft Propeller Airworthiness," or should be military approved aircraft propellers. The maximum engine power and propeller shaft rotational speed permissible for use in the particular airplane involved should not exceed the corresponding limits for which the propeller has been certificated.

.410 PROPELLER VIBRATION. In the case of airplanes equipped with propellers having metal blades or other highly stressed metal components, the vibration characteristics of the propeller-engine combination should be approved by the Administrator.

.411 PROPELLER PITCH AND SPEED LIMITATIONS. Suitable means should be provided to limit the propeller pitch and speed to values which will assure safe operation under all normal conditions of operation.

.42 Fuel System. The fuel system should be constructed and arranged in a manner to assure the provision of fuel to each engine at a flow rate and pressure adequate for proper engine functioning under all normal conditions of operation, and also to minimize the possibility of the formation of vapor lock in the system.

.420 FUEL SYSTEM ARRANGEMENT. Fuel systems should be so arranged as to assure against the possibility of air lock due to unequal feeding in case two or more tanks can supply fuel simultaneously.

.421 FUEL FLOW RATE. The ability of the fuel system to provide the required fuel flow rate should be demonstrated, with the airplane in the attitude corresponding to the best angle of climb at minimum weight, and at a pressure not less than the minimum permissible for satisfactory engine operation with the particular carburetor setting employed. For the purpose of this demonstration the attitude at the best angle of climb may be calculated. The quantity of fuel in the tank being tested should not exceed ten percent of the tank capacity, plus one gallon.

.4210 *Fuel Flow Rate for Gravity Feed Systems.* The fuel flow rate for gravity feed systems (main and reserve supply) should be 150 percent of the actual take-off fuel consumption of the engine.

.4211 *Fuel Flow Rate for Pump Systems.* The fuel flow rate for both the primary and energency pump should be 0.9 lbs. per hour for each take-off horsepower or 125 percent of the actual take-off fuel consumption of the engine, whichever is greater. In the case of hand-operated pumps, this flow should be available when the pump is operated at not more than 60 complete cycles (120 single strokes) per minute.

.422 FUEL TANKS. Fuel tanks should be capable of withstanding without failure any vibration, inertia, and fluid and structural loads to which they may be subjected in operation. Suitable means should be provided to permit satisfactory drainage in the normal ground attitude of water, sediment, or other foreign material that may have collected in the tank. The fuel tank outlet should be provided with a suitable finger strainer which is accessible for cleaning.

Fuel tanks should be suitably vented from the top portion of the tank. The vent should be so constructed as to preclude the possibility of siphoning fuel during normal operation. There should be no undrainable points in the vent line in either the ground or level flight attitude. Vents should not terminate at points where the discharge of fuel from the vent outlet will constitute a fire hazard or from which fumes may enter personnel compartments or other portions of the airplane.

Unless a separate sediment bowl is provided, fuel tanks should be provided with an adequate sump which will be effective in all normal ground and flight attitudes.

. An expansion space of at least 2 percent of the tank capacity should be provided in the tank. It should not be possible inadvertently to fill the expansion space when the airplane is in the normal ground attitude.

.4220 *Fuel Tank Pressure Test.* Fuel tanks should be capable of withstanding an internal test pressure of 3 1/2 psi without failure or leakage or excessive distortion.

.4221 *Fuel Tank Installation.* The method of support for tanks should be such as to adequately distribute over the tank surface the loads resulting from weight of the fluids in the tanks. Tanks should be protected against chaffing at the points of support. If flexible tank liners are employed, they should be so supported that wear of lines will not occur and so that the liner will not be required to withstand fluid loads.

Tank compartments should be ventilated and drained to prevent the accumulation of inflammable fluids or vapors. Compartments adjacent to tanks which are an integral part of the airplane structure should also be ventilated and drained.

Fuel tanks should not be located on the engine side of the firewall.

.423 FUEL PUMP AND PUMP INSTALLATION. If fuel pumps are provided, at least one pump for each engine should be directly driven by the engine. Emergency fuel pumps should be provided to permit supplying all engines with fuel in case of the failure of any engine-driven pump.

.424 FUEL SYSTEM LINES, FITTINGS, AND ACCESSORIES. Fuel lines should be installed and supported in a manner which will prevent excessive vibration and will be adequate to withstand loads due to fuel pressure and accelerated flight conditions. Lines which are connected to components of tne airplane between which relative motion might exist should incorporate provisions for flexibility. Drains should be provided to permit safe drainage of the entire fuel system.

.4240 *Fuel Strainer.* An accessible fuel strainer should be provided between the fuel tank outlet and the fuel pump or carburetor inlet.

.43 Oil System. Each engine should be provided with an independent oil system capable of supplying the engine with an ample quantity of oil at a temperature not exceeding the maximum which has been established as safe for continuous operation.

.430 OIL TANKS. Oil tanks should be capable of withstanding without failure all vibration, inertia, and fluid loads to which they might be subjected in operation.

An expansion space of not less than ten percent of the tank capacity or 1/2 gallon, whichever is greater, should be provided. It should not be possible inadvertently to fill the oil tank expansion space when the airplane is in the normal ground attitude.

Oil tanks should be suitably vented. Vents should be so arranged that condensed water vapor which might freeze and obstruct the line cannot accumulate at any point.

.4300 *Oil Tank Pressure Test.* Oil tanks should be capable of withstanding an internal test pressure of 5 psi without failure or leakage, or excessive distortion.

.4301 *Oil Tank Installation.* Oil tank installations should comply with the requirements of section .4221.

.431 OIL SYSTEM LINES, FITTINGS AND ACCESSORIES. Oil lines should comply with the provisions of section .425. Drains should be provided to permit safe drainage of the entire oil system and should incorporate means for positive locking in the closed position.

.432 ENGINE BREATHER LINES. Engine breather lines should be so arranged that condensed water vapor which might freeze and obstruct the line cannot accumulate at any point. Breathers should discharge in a

location which will not constitute a fire hazard in case foaming occurs. The breather should not discharge into the engine air induction system.

.44 Cooling. Tests should be conducted to demonstrate that suitable cooling means are provided to maintain engine temperatures within safe operating limits under all normal conditions of operation when the outside air temperature is 100° F at sea level (decreasing at the rate of 3.6° F per thousand feet above sea level).

.45 Induction System. Each engine should be provided with an alternate air intake in addition to the normal carburetor air intake.

.450 INDUCTION SYSTEM ANTI-ICING PROVISIONS. The engine air induction system should incorporate a preheater or equivalent means to minimize the possibility of carburetor icing.

.451 CARBURETOR AIR PREHEATER DESIGN. Means should be provided to assure adequate ventilation of exhaust carburetor air preheaters when the engine is being operated with carburetor heat off. The preheater should be constructed in such a manner as to permit inspection of exhaust manifold parts which it surrounds.

.46 Exhaust System. The exhaust system should be constructed and arranged in such a manner as to assure the safe disposal of exhaust gases without the existence of a hazard of fire or carbon monoxide contamination of air in personnel compartments.

Unless suitable precautions are taken, the exhaust discharge and exhaust system parts should not be located in close proximity to portions of any systems carrying inflammable fluids, vapors, or dust, nor should they be located under portions of such systems which may be subject to leakage. All exhaust system components should be separated from adjacent inflammable portions of the airplane which are outside the engine compartment by means of fireproof shields. The exhaust outlet should not be located at any point which might result in ignition of inflammable fluids or dust being discharged from the airplane.

.460 EXHAUST MANIFOLD. Exhaust manifold should be made of fireproof material. Portions of the manifold which are connected to components between which appreciable relative motion might exist should incorporate provisions for flexibility.

.461 EXHAUST HEATERS USED IN CABIN AIR HEATING SYSTEMS. Heat exchangers of this type should be so constructed as to preclude the possibility of exhaust gases entering the ventilating air. Suitable means should be provided to permit inspection of critical portions of the heater or exhaust manifold parts.

.47 Firewalls. All engines should be isolated from the remainder of the airplane by means of a tight firewall constructed of the following materials or equivalent:

(a) Heat and corrosion resistant steel 0.015 inch thick.

(b) Low carbon steel, suitably protected against corrosion, 0.018 inch thick.

.48 Cowling. Provision should be made to permit rapid, complete and safe drainage of all portions of the cowling in all normal ground and flight attitudes.

Cowling should be constructed of fire-resistant material. All portions of the airplane lying behind openings in the engine compartment cowling should also be constructed of fire-resistant materials for a distance of at least 24 inches aft of such openings.

.49 Powerplant Controls and Accessories.

.490 POWERPLANT CONTROLS. Controls should maintain any necessary position without constant attention by the flight personnel and should not tend to creep due to control loads or vibration. Controls should be plainly marked to show their function and method of operation unless the function is obvious.

.491 POWERPLANT ACCESSORIES. Accessories driven by the engine should be limited in power requirements and overhung mass to the maximum allowable for the engine drive on which they are mounted.

Electrical accessories subject to arcing or sparking should be installed so as to minimize the possibility of their contact with any inflammable fluids or vapors which might be present in case of failure or leakage.

.5 EQUIPMENT

.50 General. Only the equipment specified in section .51 of these criteria need be installed in an airplane submitted for certification under these criteria. The equipment provided should have no features which experience has shown will render it unreliable or otherwise unsatisfactory. Such additional equipment as is necessary for a specific type of operation is listed in other pertinent parts of the Civil Air Regulations.

.51 Required Equipment

(a) Airspeed Indicator
(b) Altimeter
(c) Power Plant Instruments
(d) Approved safety belts or harnesses.

.52 Recommended Equipment

(a) Magnetic Direction Indicator
(b) Stall Warning Indicator
(c) Approved Shoulder Harnesses.

.6 DESIGN AND OPERATING LIMITATIONS AND INFORMATION

.61 Design Limitations. *Design limitations should be established as* follows and submitted to the CAA for inclusion in the Aircraft Specification.

.610 AIRSPEEDS.

.6100 *Never-Exceed Speed, (V_{n_e}).* This speed should not exceed 0.9 times the maximum dive speed demonstrated in flight tests or 0.9 v_d, as defined in section .2100, whichever is the lesser.

.6101 *Maneuvering Speed, (V_M).* This speed should not exceed the speed from Figure .2100.

.6102 *Flaps Extended Speed, (V_{f_e}).* The flap extended speed should not exceed 24 times the square root of the wing loading W/S, where W is the maximum gross weight used for design of the airframe.

.611 POWERPLANT. The applicable limits on rotational speed and manifold pressure should not exceed, and the fuel octane rating should not be less than those established in the type certification of the engine and propeller.

.612 MAXIMUM WEIGHT. The airplane design limitation maximum weight should be determined in accordance with section .111.

.613 AIRPLANE CENTER OF GRAVITY. The design limitation center of gravity limits should be those determined in accordance with section .11.

.62 Operating Limitations. Operating limitations appropriate to the special purpose for which the airplane is to be used will be prescribed by the Administrator on Form ACA-309 in accordance with CAM 8.30-1.

.63 Markings and Placards.

.630 GENERAL. The following information should be displayed on markings and placards on the appropriate parts of the airplane. Markings and placards should be such that they cannot be easily disfigured or obscured.

.631 AIRSPEED MARKINGS. The following airspeed limits as specified in section .610 should be marked on the airspeed indicator or on a placard posted adjacent to the indicator.

Maximum Airspeeds

Flaps extended..... V_{f_e}
Abrupt maneuvers..... V_M
Never exceed..... V_{n_e}

.632 COCKPIT CONTROL MARKINGS. Cockpit controls with the exception of the primary flight controls should be marked plainly as to their function and method of operation. All emergency controls should be colored red.

.633 POWERPLANT INSTRUMENT MARKINGS. All required powerplant instruments should be marked with a red radial line at the maximum and minimum (if applicable) indications for safe operation. The normal operating ranges should be marked with a green arc which should not extend beyond the maximum and minimum limits for continuous operation. Take-off and precautionary ranges should be marked with a yellow arc.

.634 FUEL CONTROL MARKINGS

(a) Controls for fuel tank valves should be marked to indicate the position corresponding to each tank, the capacity of each tank, and the minimum fuel octane rating.

(b) When more than one fuel tank is provided, and if safe operation depends upon the use of tanks in a specific sequence, the fuel tank selector controls should be marked adjacent to or on the control to indicate to the flight personnel the order in which the tanks should be used.

.635 DISPOSABLE LOAD PLACARDS. Each cargo compartment, disposable load installation (hoppers and spray tanks), and ballast location should bear a placard which states the maximum allowable weight of contents and, if applicable, any special limitations of contents due to loading criteria, etc. For type certification, the weights specified on these placards should be consistent with the maximum weight and center of gravity range established under sections .111 and .11. These placards may be changed in accordance with CAM 8.10-3.

.64 Airplane Empty Weight and Balance Information. The manufacturer should furnish with each airplane a weight and balance report showing the empty weight and center of gravity data as determined in accordance with sections .10 and .11.

.7 IDENTIFICATION DATA.

In accordance with CAR 1.50, an identification plate should be securely attached to the structure in an accessible location where it is not likely to be defaced in normal service or destroyed in an accident.

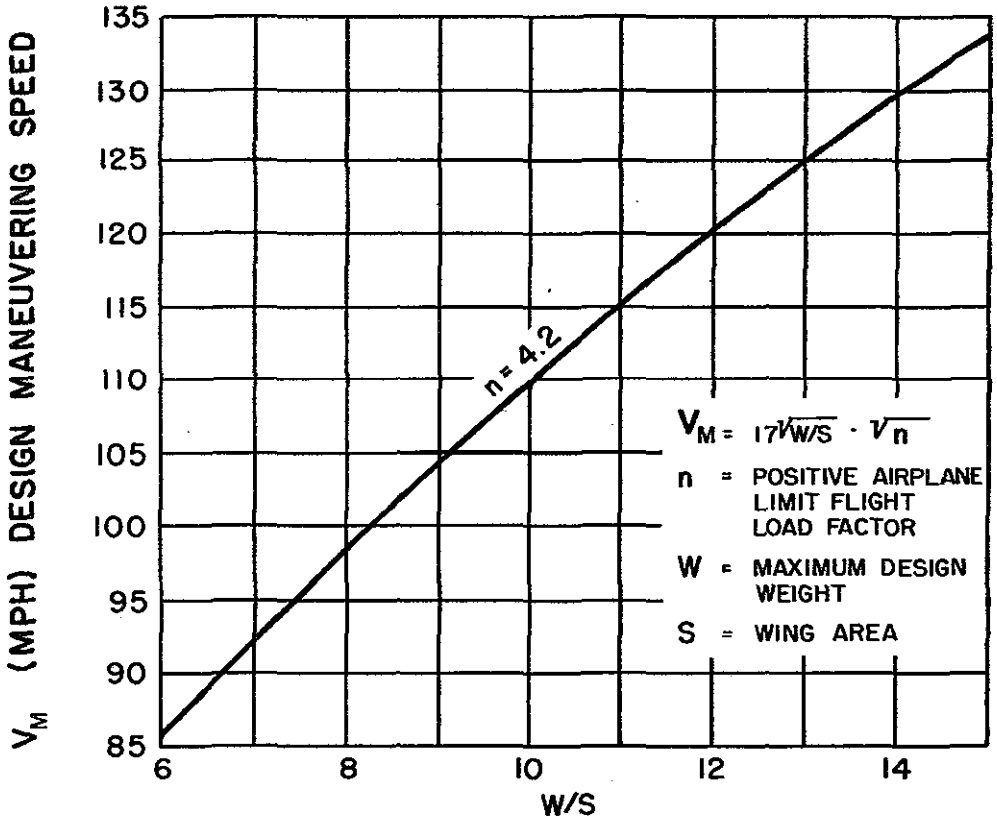

Figure .2100.—Minimum Design Maneuvering Speed

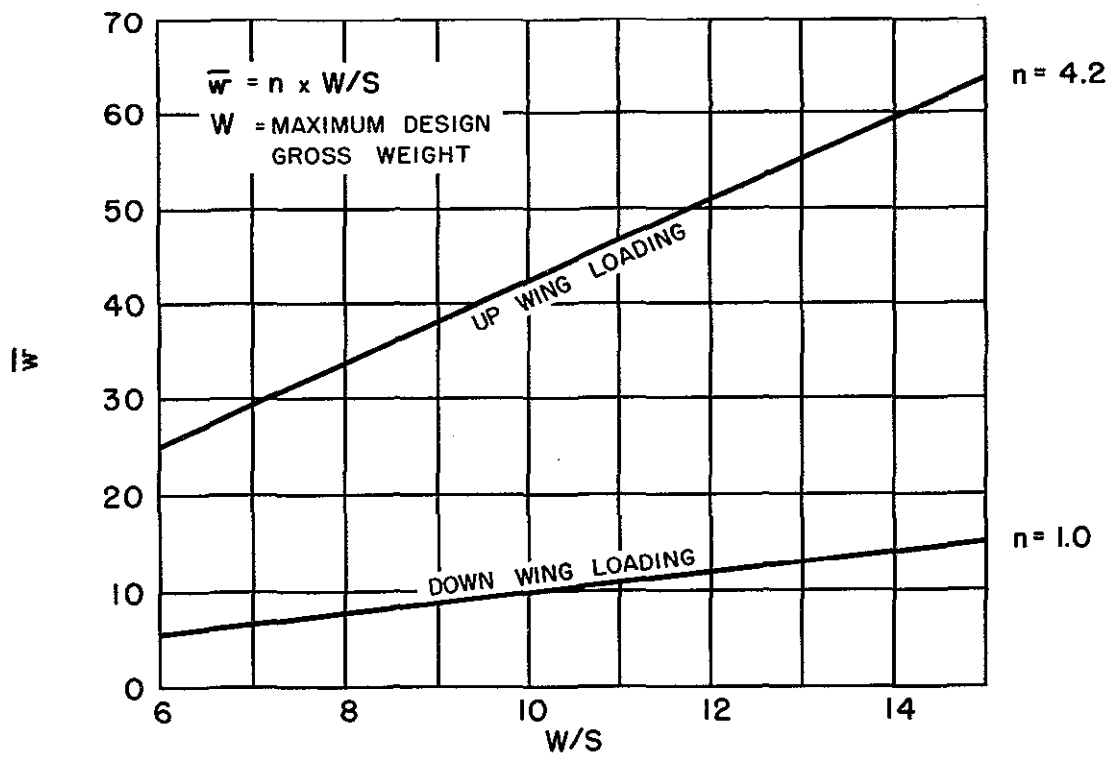

Figure .2120.—Design Limit Wing Loading

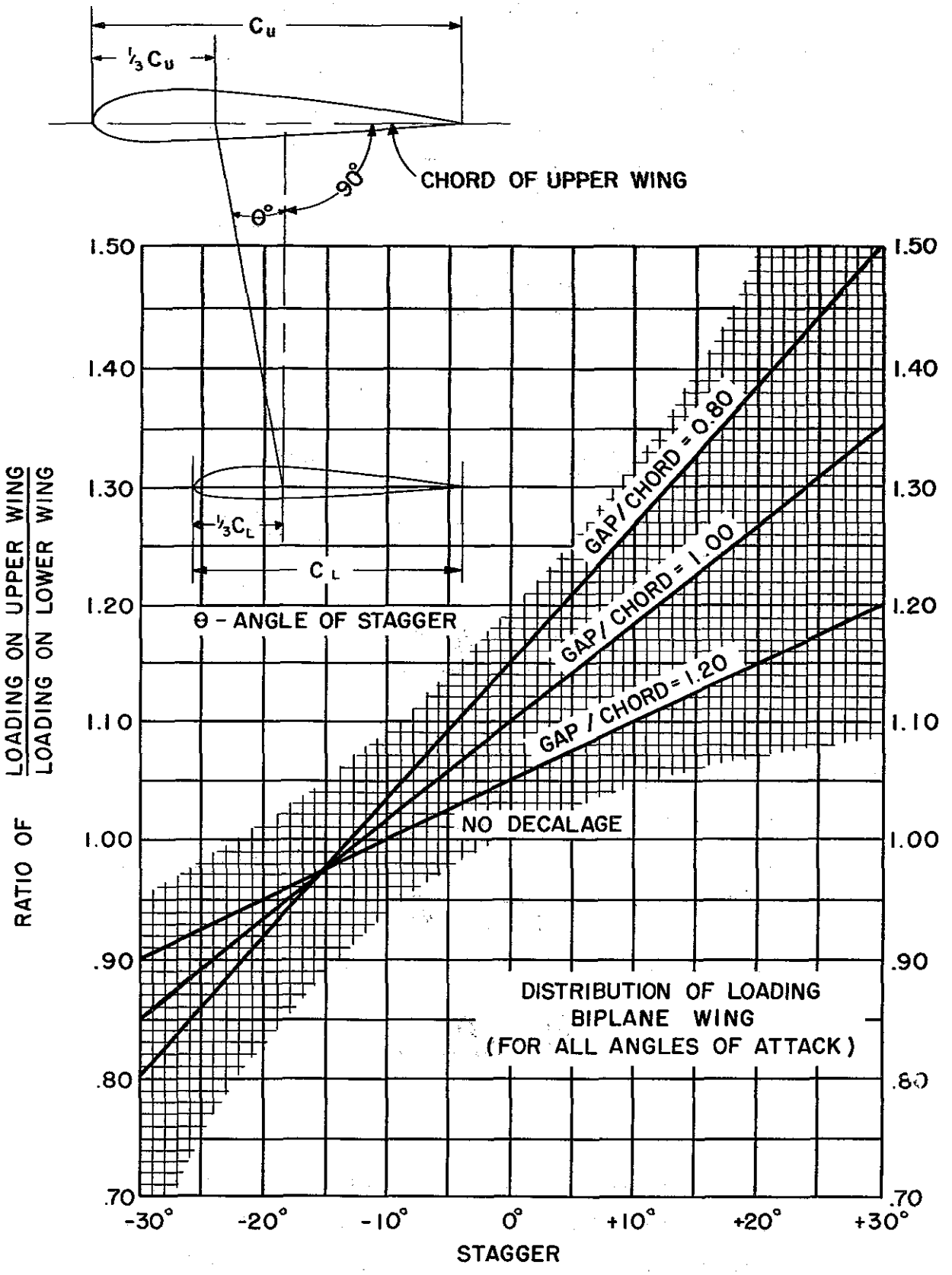

Figure .212(a).—Distribution of Loading Between Upper and Lower Biplane Wings

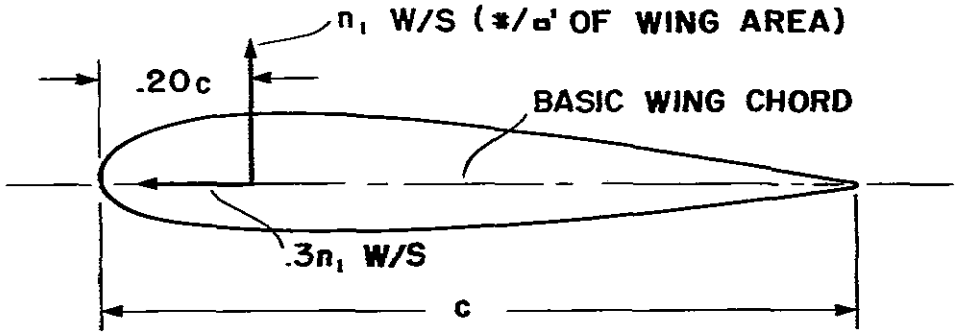

P. H. A. A.

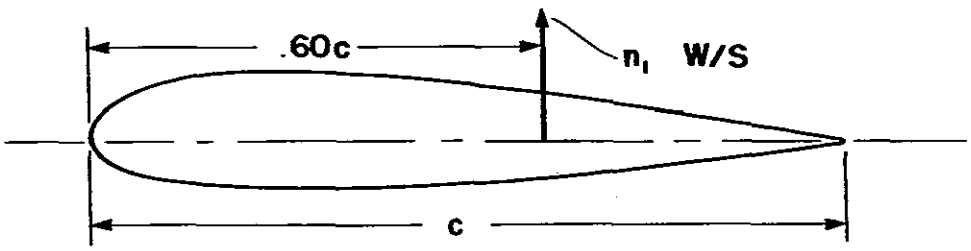

P. L. A. A.

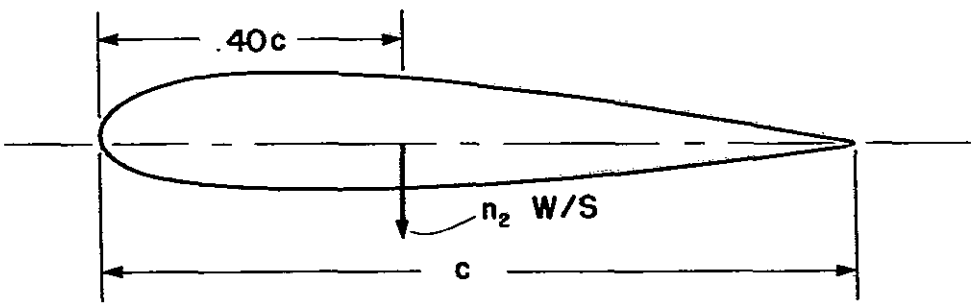

N. L. A. A.

WHERE :

n_1 = MAXIMUM POSITIVE FLIGHT LOAD FACTOR

n_2 = MAXIMUM NEGATIVE FLIGHT LOAD FACTOR

W/S = MAXIMUM GROSS WEIGHT WING LOADING

Figure .212(b).—Wing Flight Conditions

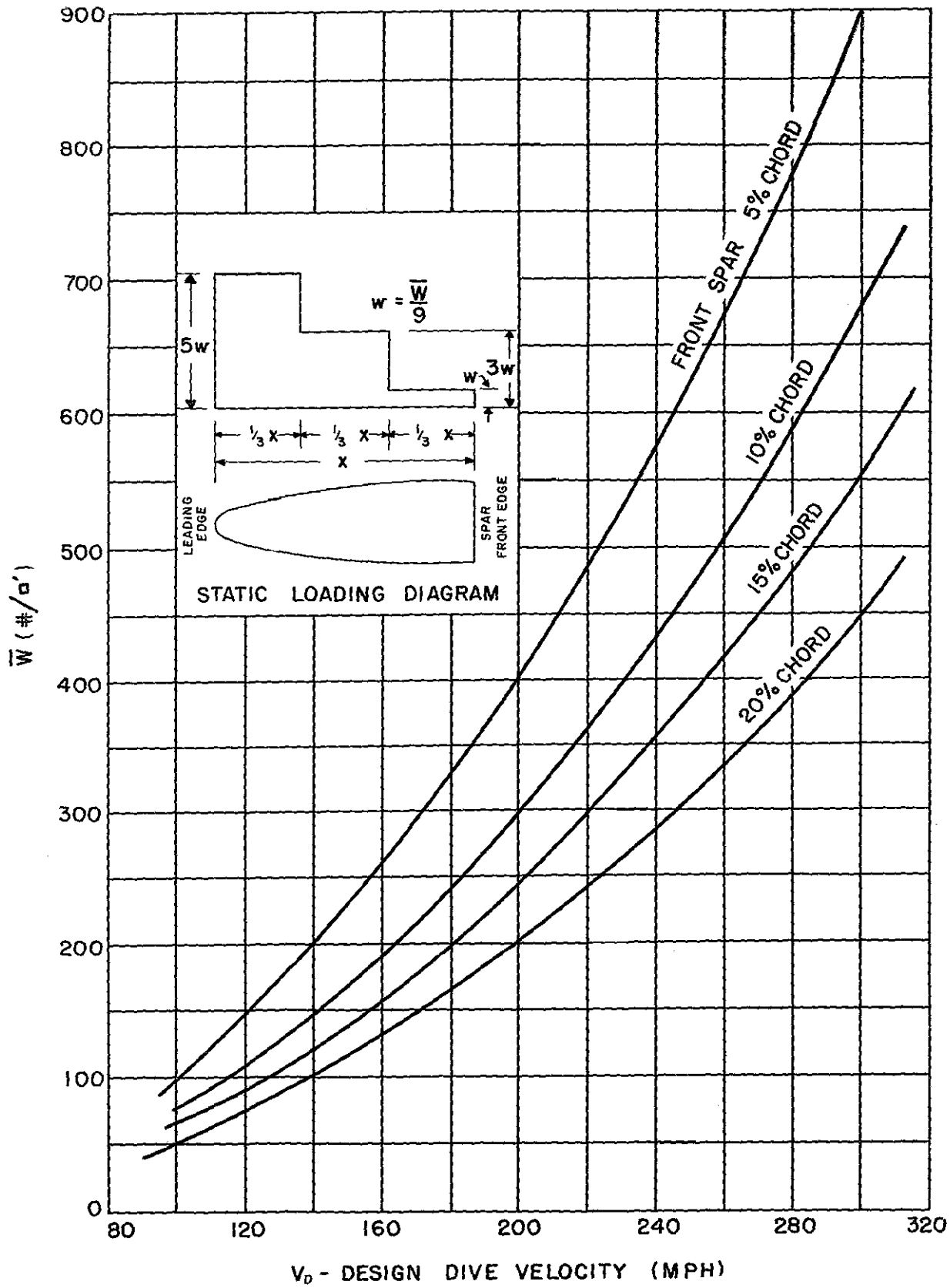
900
800
700
600
500
400
300
200
100
0
80
120
160
200
240
280
320
W̄ (#/a')
V_D - DESIGN DIVE VELOCITY (MPH)
FRONT SPAR 5% CHORD
10% CHORD
15% CHORD
20% CHORD
w = W̄/9
5w
w
3w
⅓ x
⅓ x
⅓ x
x
LEADING EDGE
SPAR FRONT EDGE
STATIC LOADING DIAGRAM

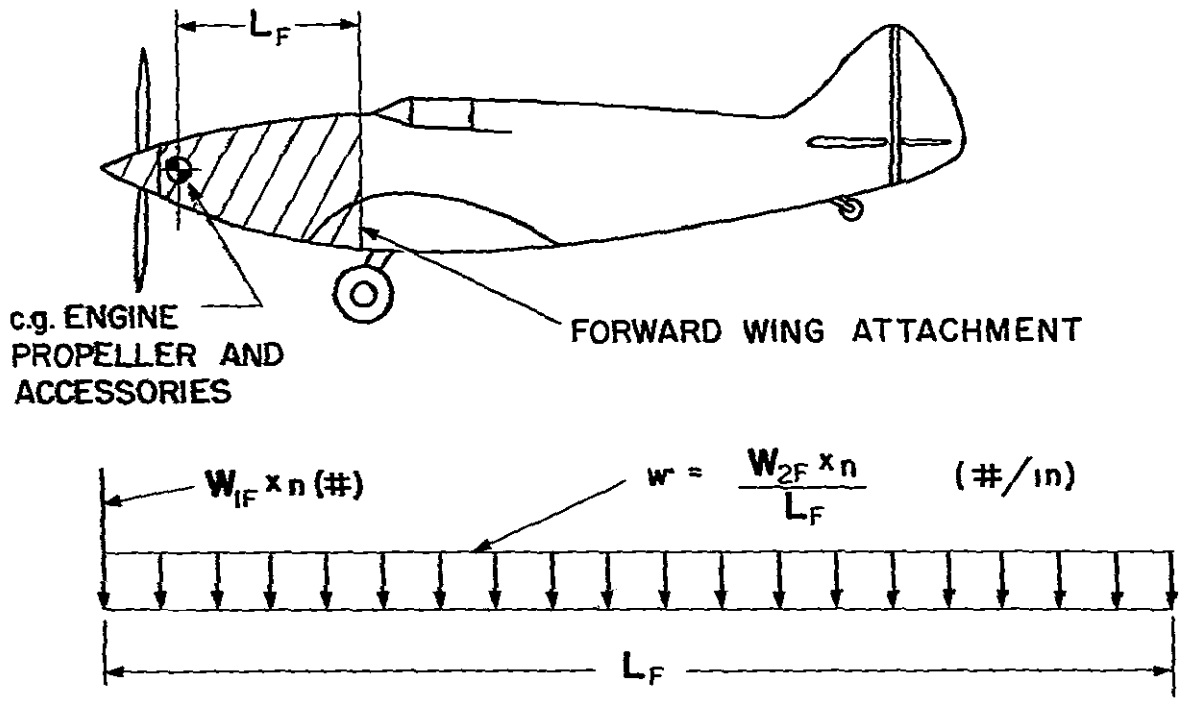

W_{1F} = WEIGHT OF ENGINE PROPELLER, AND ACCESSORIES ASSUMED CONCENTRATED AT THEIR c.g.

W_{2F} = WEIGHT OF ALL ITEMS IN FUSELAGE FORWARD OF FORWARD WING ATTACHMENT INCLUDING STRUCTURE WEIGHT BUT EXCLUDING ENGINE ITEMS (USE WEIGHT ITEMS FOR MOST FORWARD c.g.)

n = LOAD FACTOR FROM SECTION .2130

Figure .2130.—Typical Forward Fuselage Loading Diagram

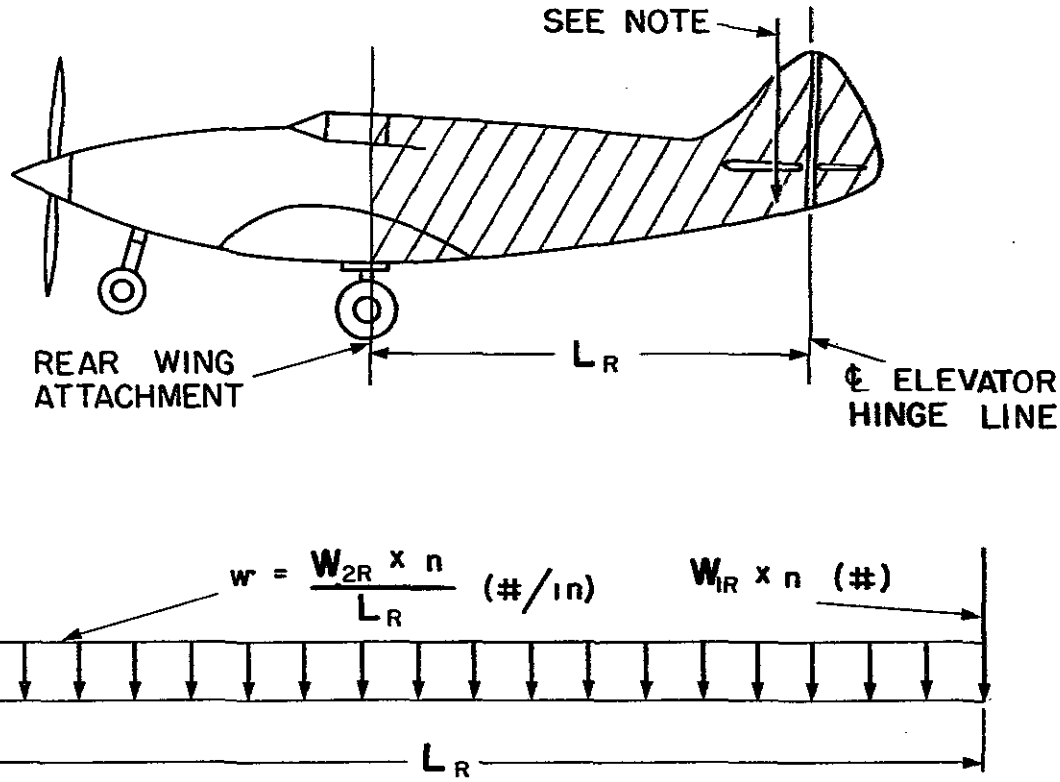

W_{IR} = WEIGHT OF HORIZONTAL AND VERTICAL TAILS

W_{2R} = WEIGHT OF ALL ITEMS IN FUSELAGE AFT OF REAR WING ATTACHMENT INCLUDING STRUCTURE WEIGHT BUT EXCLUDING TAIL (USE WEIGHT ITEMS FOR MOST AFT c.g.)

n = LOAD FACTOR FROM SECTION .2131

NOTE: FOR AFT FUSELAGE OVERALL DESIGN THE HORIZONTAL AND VERTICAL TAIL LOADS FROM SECTION .214 MAY BE ASSUMED CONCENTRATED AT 50% OF THE TAIL SURFACE CHORD.

Figure .2131.—Typical Aft Fuselage Loading Diagram

TABLE .214

AVERAGE LIMIT CONTROL SURFACE LOADINGS

SURFACE	DIRECTION OF LOADING	MAGNITUDE OF LOADING	CHORDWISE DISTRIBUTION
HORIZONTAL TAIL	(a) UP AND DOWN	FIGURE .214 CURVE ③ *	Ⓐ 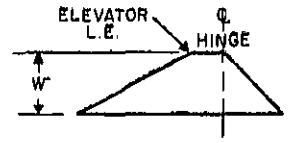
	(b) DOWN	FIGURE .214 CURVE ③ * *	Ⓑ 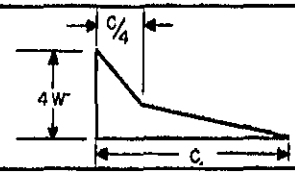
	(c) UP	.60 x DOWN LOAD (b) * *	
VERTICAL TAIL	(a) RIGHT OR LEFT	FIGURE .214 CURVE ③ *	SAME AS Ⓐ ABOVE
	(b) RIGHT OR LEFT	FIGURE .214 CURVE ② * *	SAME AS Ⓑ ABOVE
AILERON	(a) UP AND DOWN	FIGURE .214 CURVE ④ *	Ⓒ 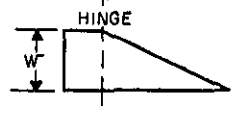
WING FLAP	(a) UP	FIGURE .214 CURVE ②	Ⓓ 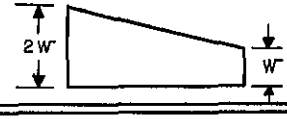
TRIM TAB	(a) UP AND DOWN	FIGURE .214-CURVE ② *	SAME AS Ⓓ ABOVE

NOTE - IF THE DESIGN MANEUVERING SPEED, V_M, SELECTED FOR DESIGN IS GREATER THAN THE VALUE SPECIFIED IN FIGURE .2100, THE VALUES MARKED * SHALL BE MULTIPLIED BY $\left(\frac{V_M \text{ SELECTED}}{V_M \text{ MINIMUM}}\right)^2$ AND VALUES MARKED * * SHALL BE MULTIPLIED BY $\left(\frac{V_M \text{ SELECTED}}{V_M \text{ MINIMUM}}\right)$

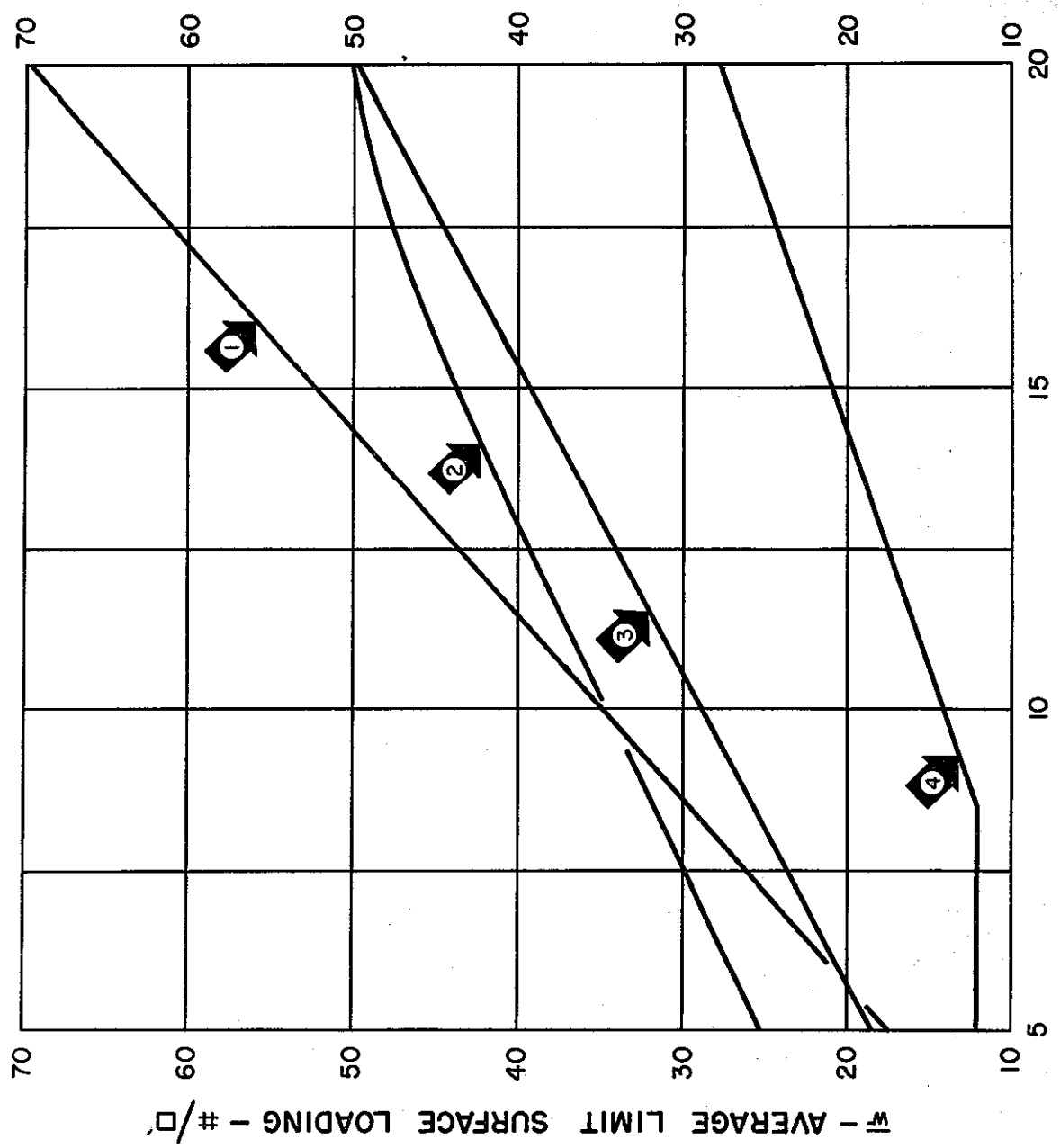
70
60
50
40
30
20
10
5
10
15
20
WING LOADING - W/S - #/□'
W' - AVERAGE LIMIT SURFACE LOADING - #/□'
1
2
3
4

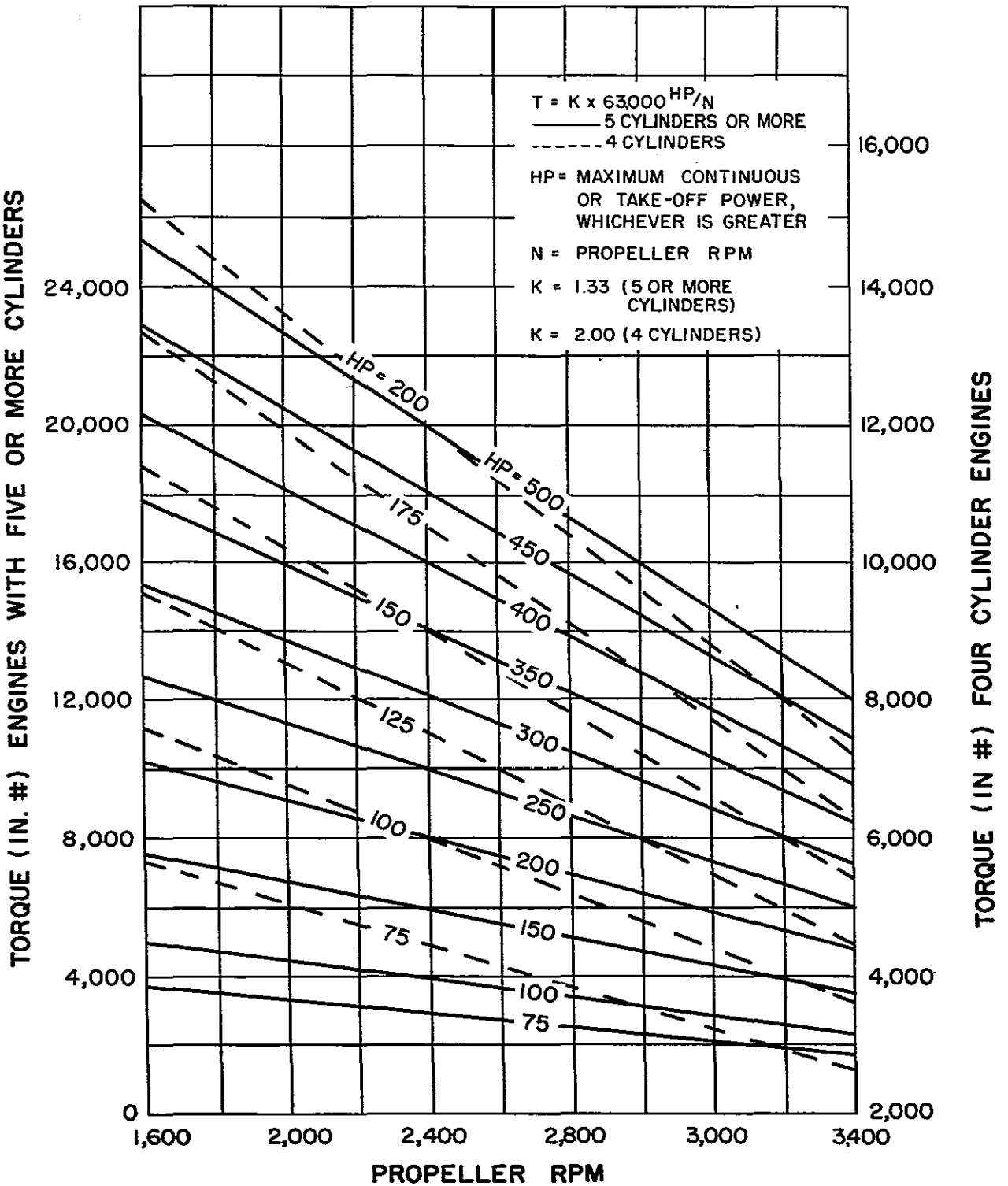

Figure .2170.—Engine Torque vs. R.P.M.

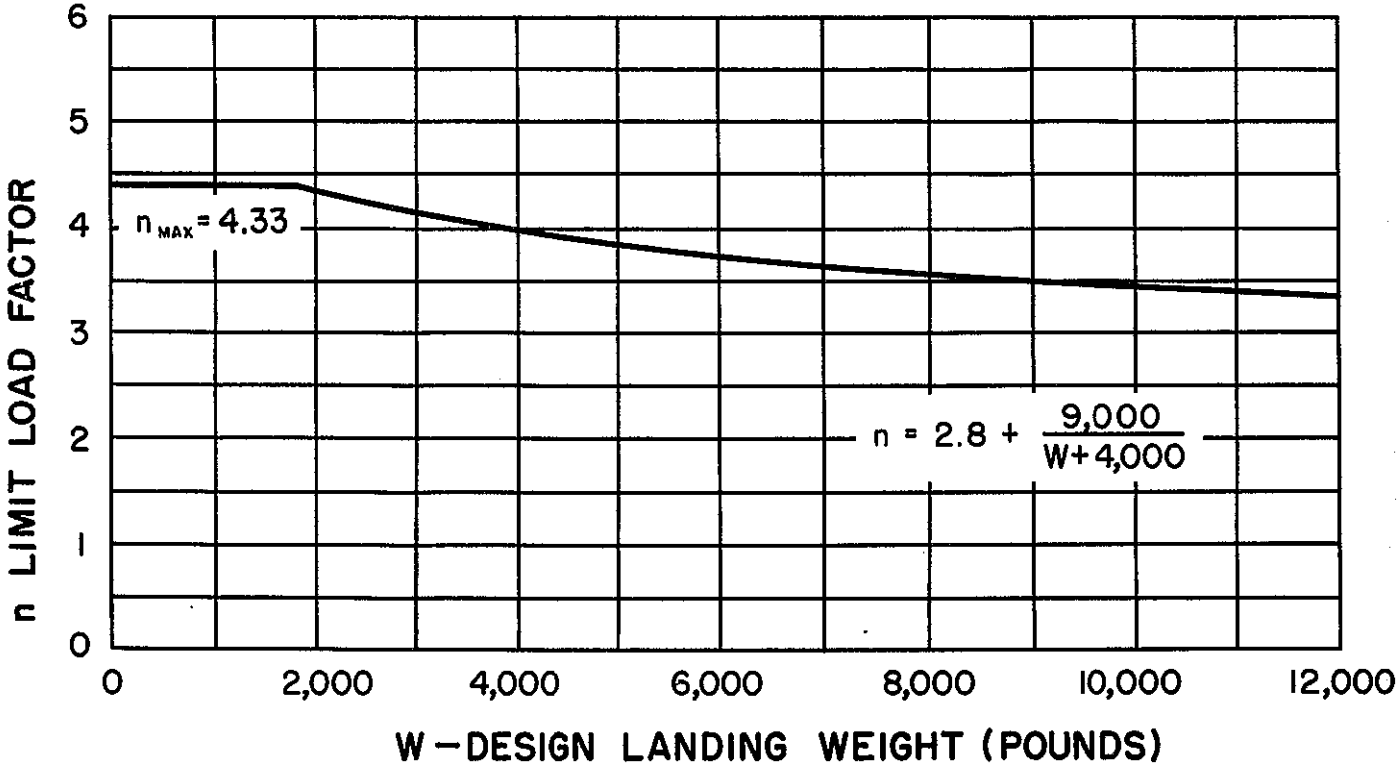

Figure .222.—Limit Load Factor For Landing Conditions

Table .2230: MAIN LANDING GEAR LIMIT LOADS (TAIL WHEEL TYPE)

Condition	1 3-point landing vertical reactions	2 Level landing with inclined reactions	3 Level landing with side load
Attitude.....	See Figure .2230(a)	See Figure .2230(b)	See Figure .2230(c)
Vertical component on both wheels	$\frac{b}{d}$ nW	nW	1.33W
Fore and aft component, both wheels.....	0	0.33W	0
Lateral component.....	0	0	0.5W acting inboard one side; 0.33W acting outboard on the other.
Shock absorber extension (hydraulic shock absorb.).....	See Note (1)	See Note (1)	Static deflection of Oleo.
Shock absorber deflection (rubber or spring shock absorber).....	100%	100%	100%.
Tire deflection, note (2).....	Static	Static	Static.
Loads applied at.....	Center of wheels	Center of wheels	Ground contact point.

Note (1): For the purpose of design, the maximum load factor should be assumed to occur throughout the full extent of the shock absorber stroke, from 25% deflection to 100% deflection, and the load factor should be used with whatever shock absorber extension is most critical for each element of the landing gear. The load factor may be obtained from Fig. .222.

Note (2): Static deflection of tires may be obtained from the "Tire and Rim Association Yearbook."

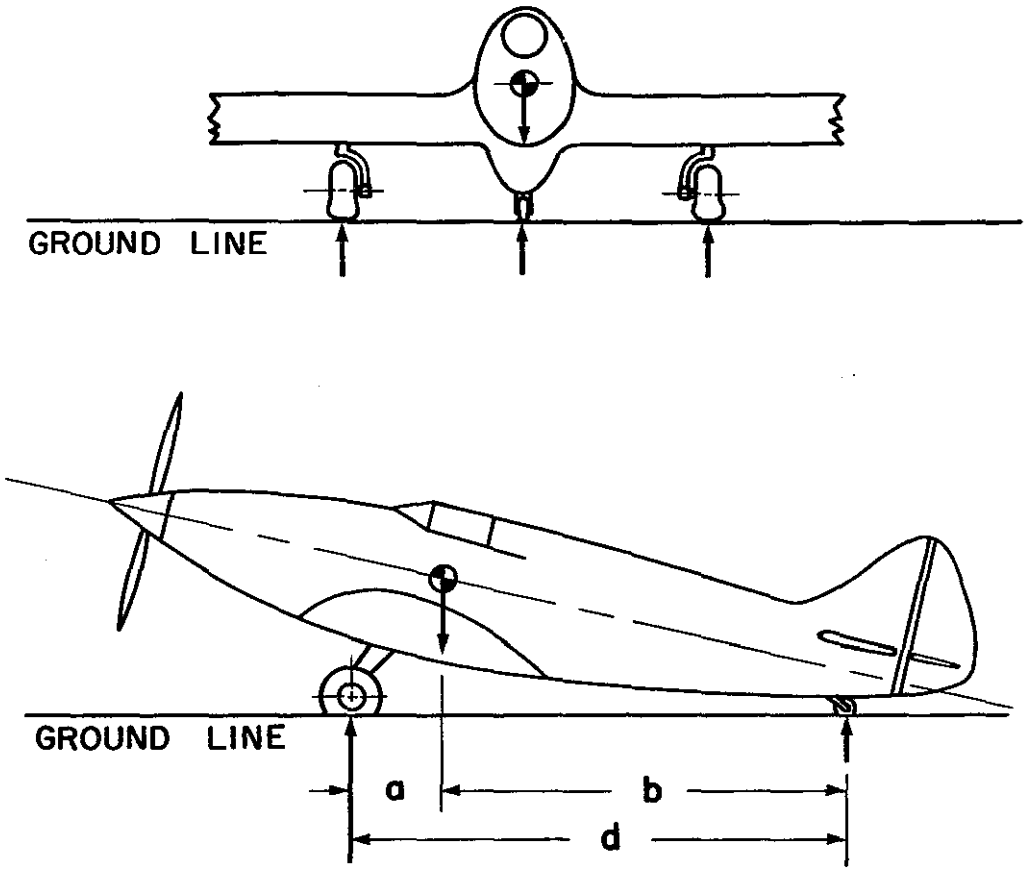

Figure .2230(a).—Three-Point Landing Condition With Vertical Reactions (Tail Wheel Type)

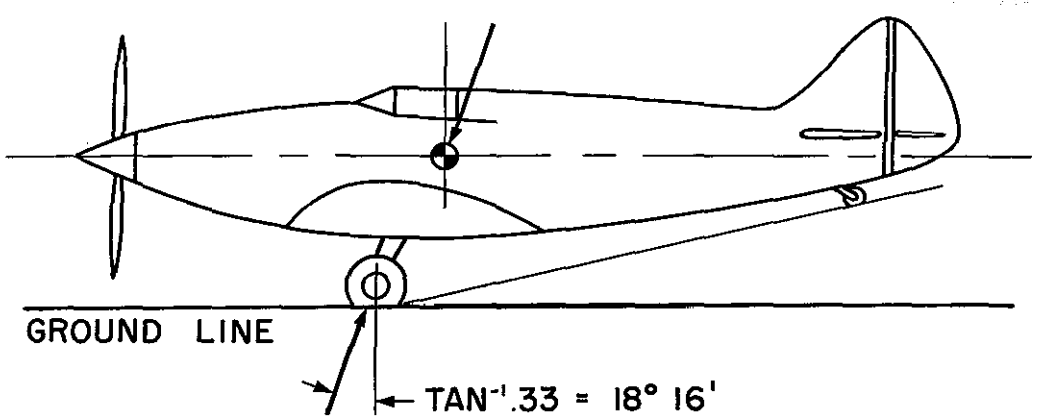

Figure .2230(b).—Level Landing With Inclined Reactions (Tail Wheel Type)

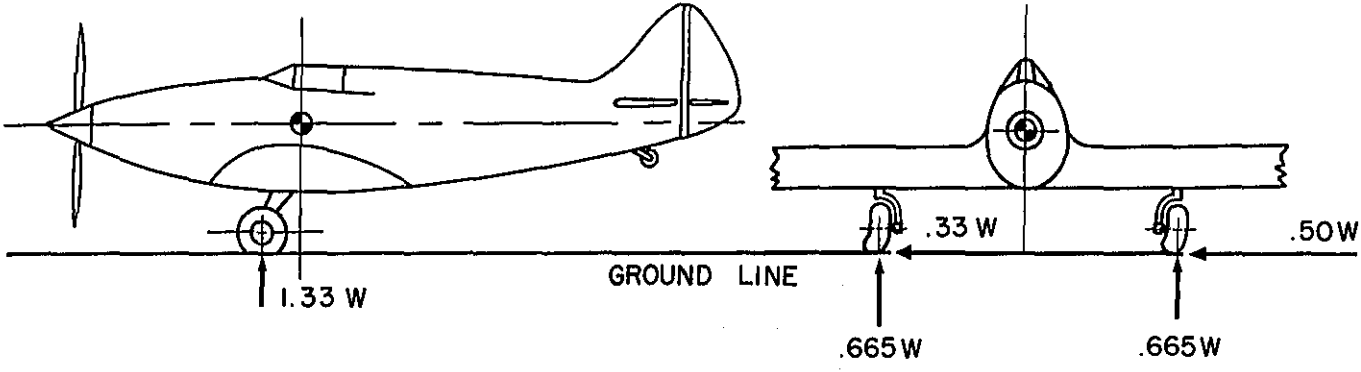

Figure .2230(c).—Level Landing With Side Load (Tail Wheel Type)

Table .2231: TAIL WHEEL LIMIT LOADS

Condition	1 3-point landing vertical reactions	2 Obstruction load condition	3 Side load-free swiveling wheel	4 Side load-locked wheel or skid
Attitude.....	See Figure .2231 (a), Note (2).	See Figure .2231(b), Note (2).	See Figure .2231(c), Note (2).	See Figure .2231(d), Note (3).
Vertical component (2)....	$\frac{a}{d}$ nW, Figure .2230(a)	$0.707\frac{a}{d}$nW, Figure .2230(a)	$\frac{aW}{d}$	$\frac{aW}{d}$
Lateral component (2).....	0	0	$\frac{aW}{d}$	$\frac{aW}{d}$
Fore and aft component....	0	0.707 $\frac{aW}{d}$	0	0
Shock absorber extension (hydraulic shock absorber).....	Note (1)	Note (1)		
Shock aosorber deflection (rubber or spring shock absorber).....	100 percent	100 percent	100 percent	100 percent
Tire deflection.....	Static	Static	Static	Static
Load applied at.....	Center of wheel	Center of wheel	Center of wheel	Ground contact point.

Note (1). For the purpose of design, the maximum load factor will be assumed to occur throughout the full extent of the shock absorber stroke, from 25% deflection to 100% deflection, and the load factor should be used with whatever shock absorber extension is most critical for each element of the landing gear.

Note (2). The maximum value of $\frac{a}{d}$ should be used.

Note (3). Required only when locking device or skid is used.

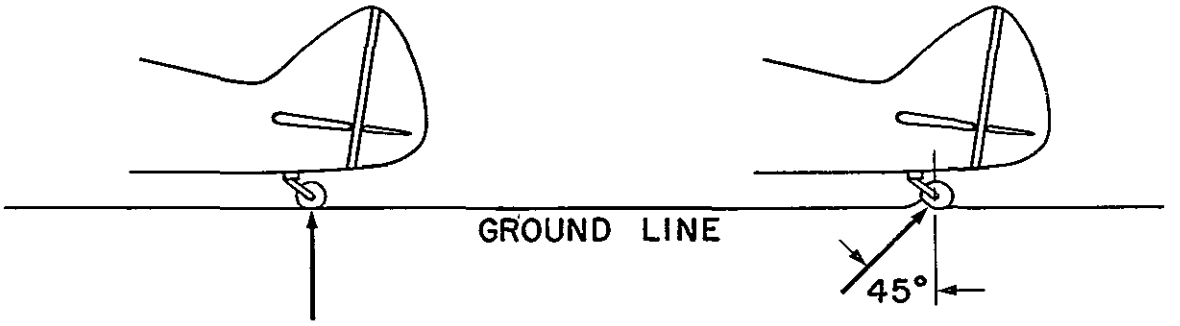

Figure .2231(a).—Three-Point Landing Condition With Vertical Reactions (Tail Wheel)

Figure .2231(b).—Obstruction Load Condition (Tail Wheel)

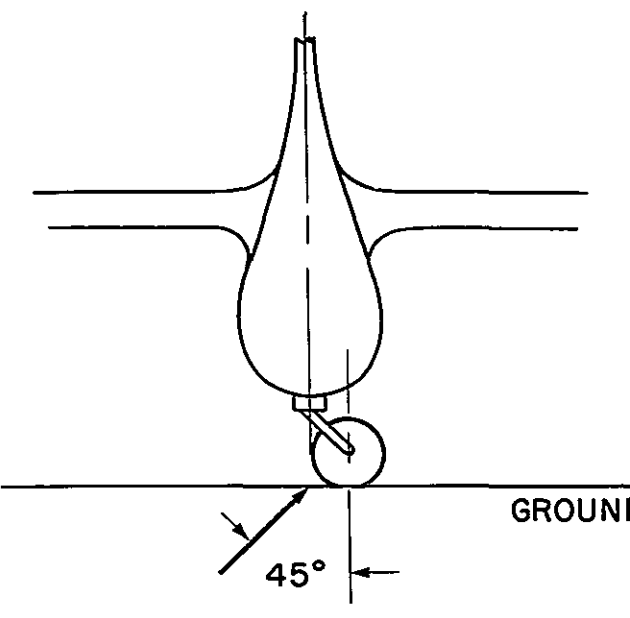

Figure .2231(c).—Side Load, Tail Wheel Free (Tail Wheel)

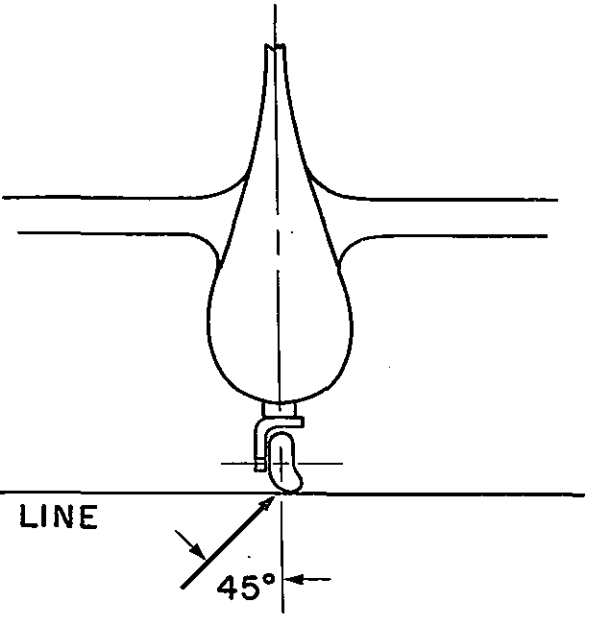

Figure .2231(d).—Side Load, Tail Wheel Locked (Tail Wheel)

Table .2232: NOSE WHEEL TYPE LANDING GEAR LIMIT LOADS

Condition	1 3-wheel landing with inclined reactions Note (2)	2 2-wheel landing with vertical reactions, nose up	3 2-wheel landing with inclined reactions, nose down	4 Side drift landing	5 Bending in nose strut
Attitude.....	See Figure .2232(b)	See Figure .2232(c)	See Figure .2232(d)	See Figure .2232(e)	See Figure .2232(f)
Shock absorber extension (hydraulic shock absorber)....	Note (1)	Note (1)	Note (1)	100 percent	Note (1)
Shock absorber deflection (rubber or spring shock absorber) Note (1).....	100 percent	100 percent	100 percent	100 percent	100 percent
Tire deflection.....	Static	Static	Static	Static	Static
Main wheel loads (both wheels) Vr.....	$n\frac{Wb'}{d'}$	nW	nW	1.33W	
Dr.....	0.33Vr	0	0.33Vr	0	
Sr	0	0	0	0.5W acting inboard on one wheel. 0.33W acting outboard on other wheel.	
Nose wheel loads Vf.....	$n\frac{Wa'}{d'}$	0	0	0	$2.25\frac{Wa}{d}$
Df.....	0.33Vf	0	0	0	Aft 0.8Vf Note (3). Forward 0.4Vf
Sf.....	0	0	0	$0.5n\frac{Wa}{d}$	0.7Vf
Loads applied at.....	Center of wheels.	Center of wheels.	Center of wheels.	Ground contact point.	Center of wheel.

Note (1). For the purpose of design, the maximum load factor should be assumed to occur throughout the full extent of the shock absorber stroke from 25% deflection to 100% deflection and the load factor may be used with whatever shock absorber extension is most critical for each element of the landing gear. The load factor may be obtained from Figure .222.

Note (2). The most forward center of gravity position should be investigated. Direction of the components is taken with respect to the ground line unless otherwise noted.

Note (3). The specified forward, aft, and side components may be assumed to act separately but should be combined with the specified vertical load in each case.

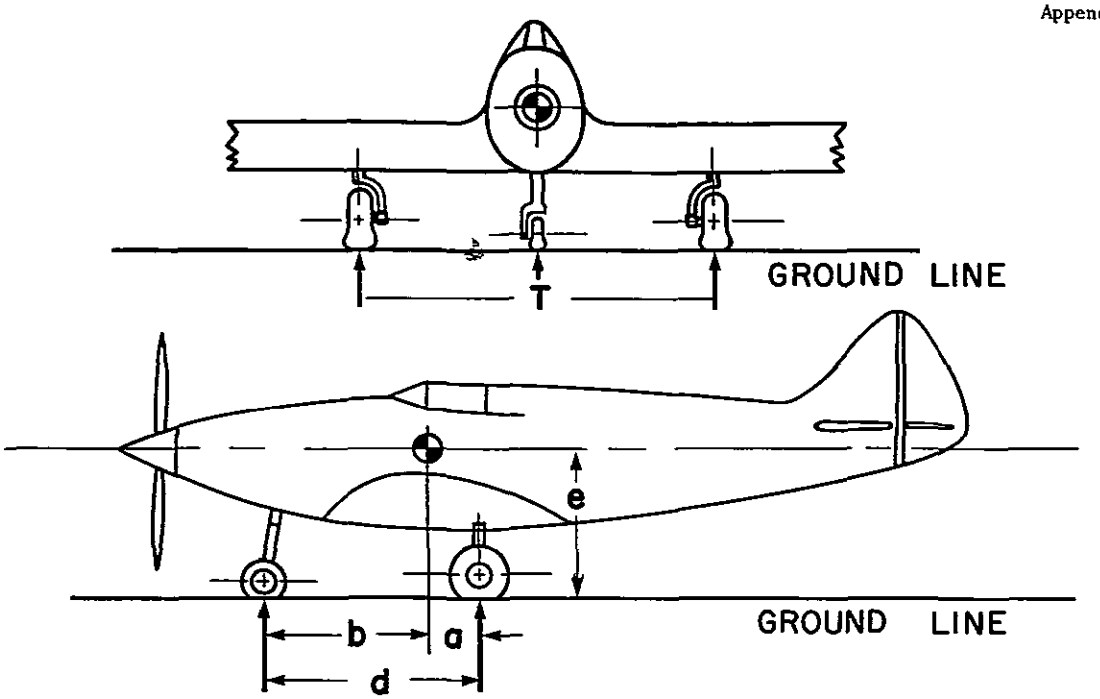

Figure .2232(a).—Essential Dimensions of Tricycle Alighting Gear

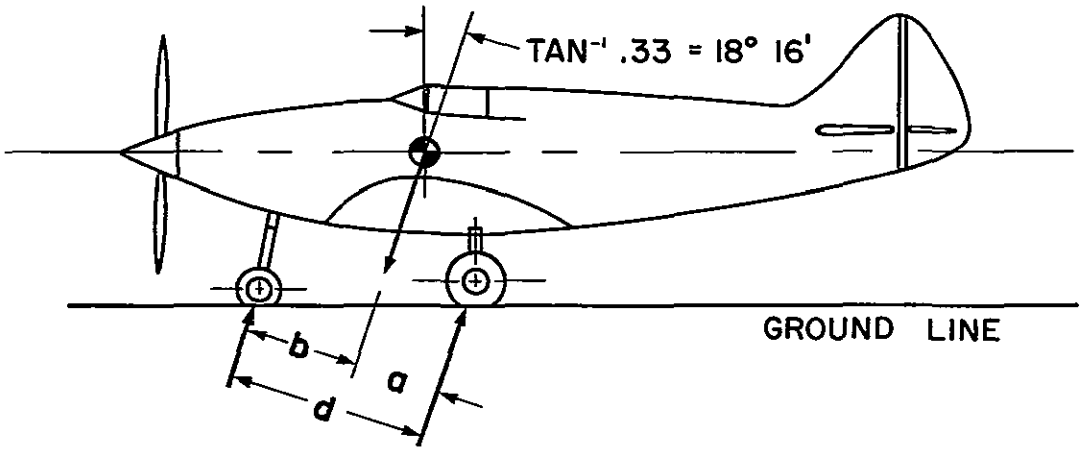

Figure .2232(b).—Three-Wheel Landing With Inclined Reactions (Tricycle Gear)

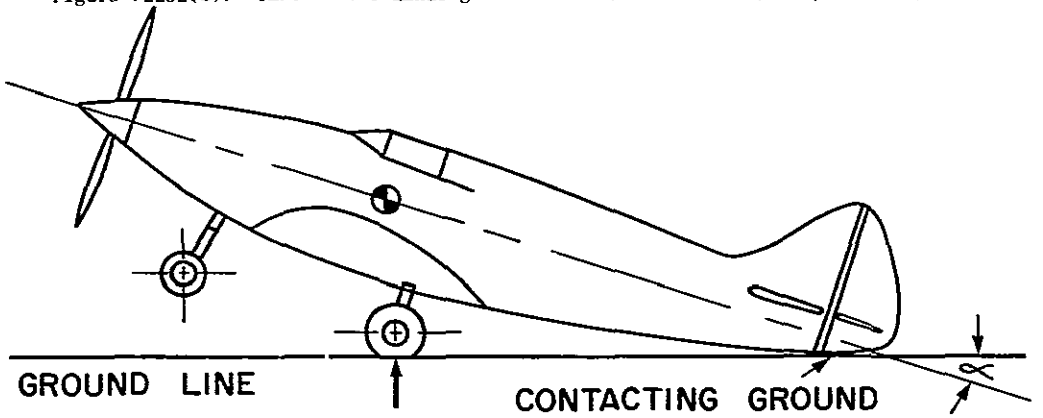

NOTE: IF ANGLE ∝ GIVES WING ANGLE OF ATTACK BEYOND STALL REDUCE ∝ UNTIL THE STALLING ANGLE IS ATTAINED

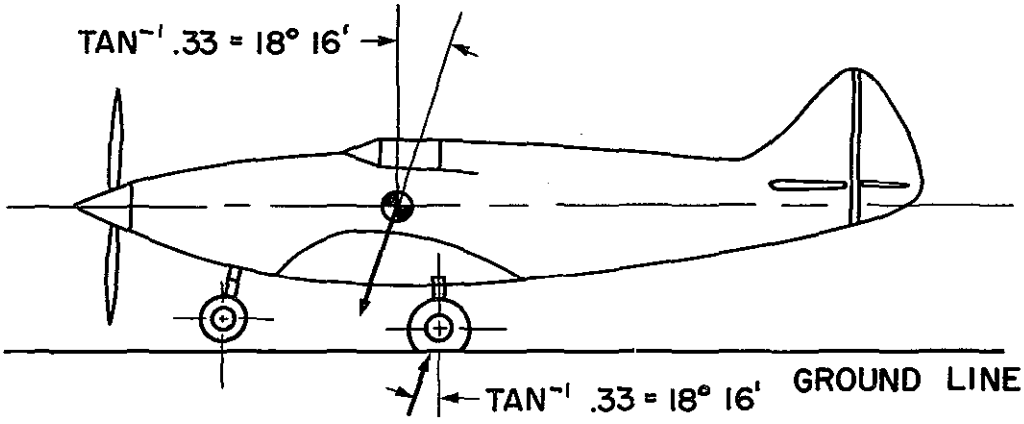

Figure .2232(d).—Two-Wheel Landing With Inclined Reactions—Nose Down. (Tricycle Gear)

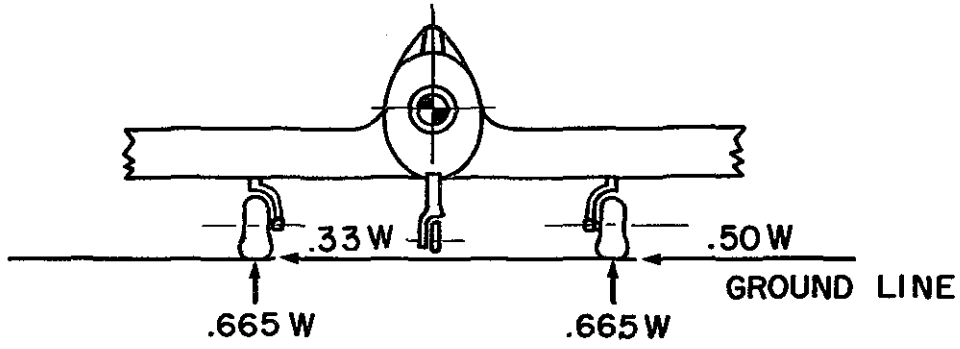

Figure .2232(e).—Side Drift Landing (Tricycle Gear)

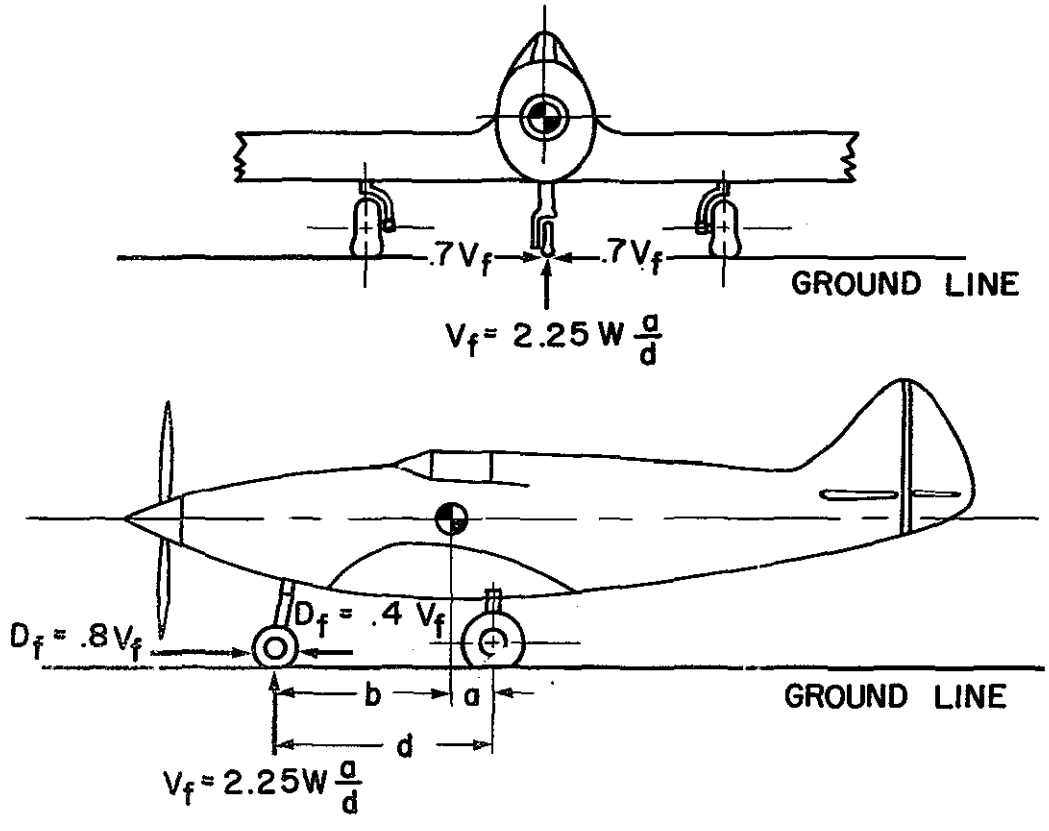

Figure .2232(f).—Bending in Nose Strut (Tricycle Gear)

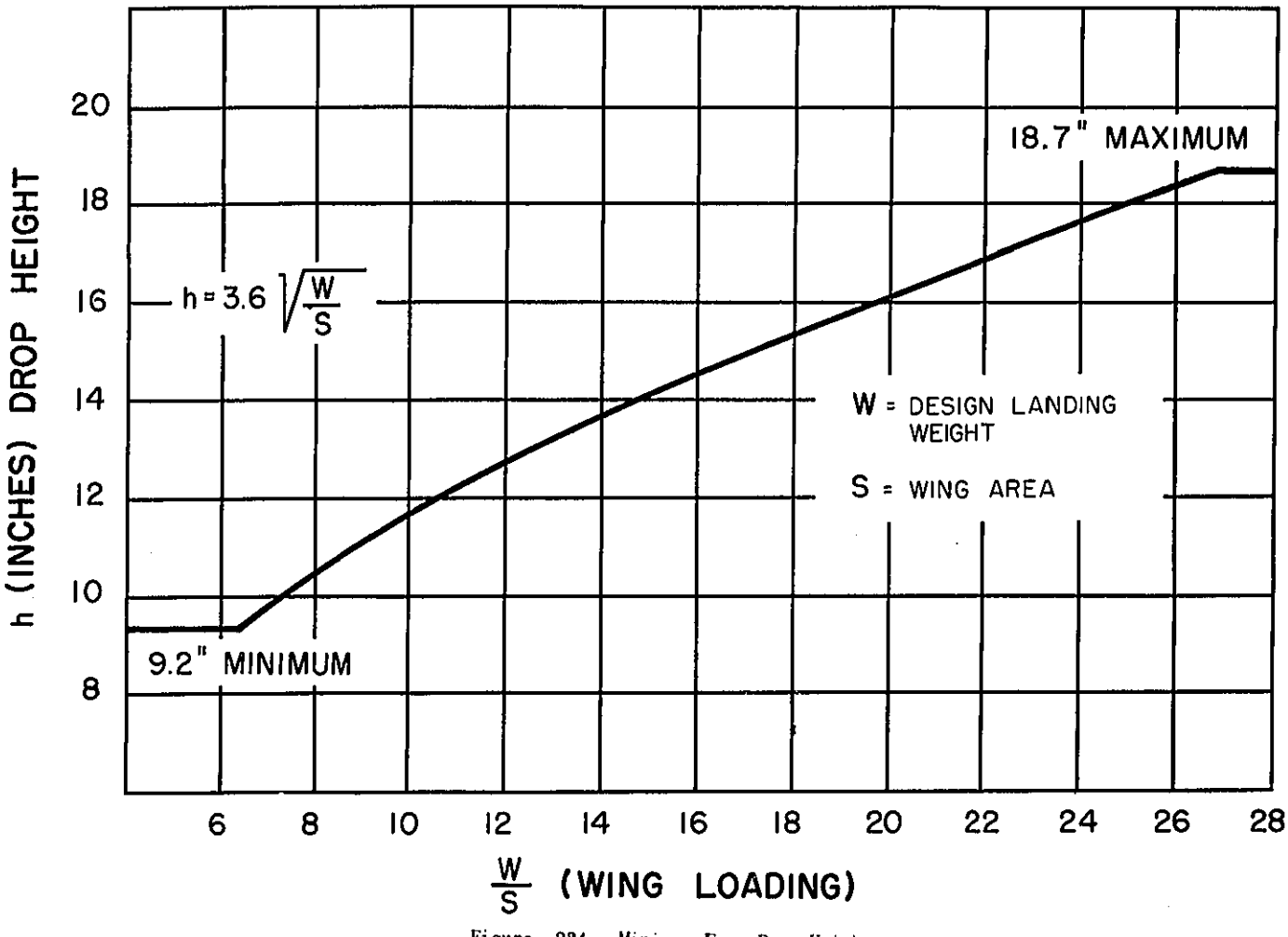

Figure .224.—Minimum Free Drop Height