U. S. DEPARTMENT OF COMMERCE

Jesse H. Jones, Secretary

CIVIL AERONAUTICS ADMINISTRATION

Donald H. Connolly, Administrator

*

Civil Aeronautics Manual 04

AIRPLANE AIRWORTHINESS

UNITED STATES GOVERNMENT PRINTING OFFICE

WASHINGTON : 1941

INTRODUCTORY NOTE

This manual contains material which is intended to interpret and explain the airplane airworthiness requirements specified in Part 04 of the Civil Air Regulations, to suggest how the presentation of the required technical data may be simplified in order to expedite the examination thereof, and to present acceptable methods for showing compliance with the requirements.

This manual contains all of the revisions which were issued for the first edition, and, in addition, includes the manual revisions proposed in Aircraft Airworthiness Section Report No. 19, "Flutter Prevention Measures". A new section, CAM 04.43-13 (Power Boost Controls) has been added in this edition, while Section E, Appendix I of the previous manual (regarding the performance of large seaplanes) has been deleted in view of recent revisions to the performance requirements of CAR 04.

It should be understood that any method which can be shown to be equivalent of one set forth in this manual will be equally acceptable to the Administration. Likewise, any interpretation herein shown to be inapplicable to a particular case may be suitably modified for such case on request. In either event such acceptance or modified interpretation will become effective as of the date of approval, rather than the date of its incorporation in this manual. This manual will be revised from time to time as equally acceptable methods, new interpretations, or the need for additional explanations are brought to the attention of the Administrator.

For reference purposes, this manual will be abbreviated by "CAM 04". The designation "CAR 04" will be used in referring to Part 04 of the Civil Air Regulations.

The material in this manual is so arranged and the sections numbered to correspond with the pertinent sections of Civil Air Regulations 04 that, for example, CAM 04.030 corresponds to CAR 04.030, and CAM 04.129-A1 refers to a specific breakdown of CAR 04.129. This edition of CAM 04 contains material pertaining to CAR 04.0 through 04.4. The remaining sections of CAR 04 will be covered by future additions.

On the reverse side of this page will be found a form for convenience in maintaining a record of subsequent revisions.

	Page No.
04.110 Indicated Airspeed, V	.1-6
04.111 Design Level Speed, V_L	.1-6
04.112 Design Gliding Speed, V_g	.1-6
04.116 Design Maneuvering Speed, V_P	.1-8
04.129 Aerodynamic Coefficients	.1-8
04.129A General	.1-8
04.129B Determination of Corrected Airfoil Characteristics	.1-11
04.129C Computation of Additional Characteristics	.1-11
04.129D Extension of Characteristic Curves	.1-13
04.129E Biplane Effects	.1-14
04.131 Primary Structure	.1-14

04.2 STRUCTURAL LOADING CONDITIONS

04.20 General Structural Requirements	*
04.201 Deformations	.2-1
04.21 Flight Loads	*
04.212 Load Factors	*
04.213 Symmetrical Flight Conditions (Flaps Retracted)	*
04.214 Symmetrical Flight Conditions (Flaps or Auxiliary Devices in Operation)	*
04.215 Unsymmetrical Flight Conditions	*
04.216 Special Flight Conditions	*
04.217 Wing Load Distribution	.2-8
04.217A Span Distribution	.2-8
04.217B Chord Distribution	.2-10
04.217C Special Loadings	.2-12
04.217D Determination of Point of Application of the Resultant Air Loads on a Wing	.2-12
04.217E Resultant Forces on Biplanes	.2-17
04.218 Balancing Loads	.2-17
04.218A General	.2-17
04.218B Balancing the Airplane	.2-19
04.22 Control Surface Loads	.2-23
04.220 General	.2-23
04.221 Horizontal Tail Surfaces	*
04.222 Vertical Tail Surfaces	*
04.224 Wing Flaps	.2-27
04.23 Control System Loads	*
04.230 General	.2-27
04.234 Flap and Tab Control Systems	.2-28
04.24 Ground Loads	*
04.240 General	.2-29
04.241 Level Landing	*
04.242 Three-Point Landing	*
04.243 Side Load	.2-33
04.244 One Wheel Landing	.2-33
04.246 Side Loads on Tail Wheel or Skid	.2-34

* (See NOTE page g)

CIVIL AERONAUTICS MANUAL

	Page No.
04.25 Water Loads	*
04.250 General	.2-34
04.254 Step Landing (Boat Seaplanes)	*
04.26 Special Loading Conditions	*
04.266 Rigging Loads	.2-40
04.271 Fittings	.2-40
04.272 Castings	.2-40
04.274 Wires at Small Angles	.2-41
04.277 Control Surface Hinges and Control System Joints	.2-41
04.3 PROOF OF STRUCTURE	
04.30 General	*
04.301 Combined Structural Analysis and Tests	.3-1
04.302 Load Tests	*
04.31 Proof of Wings	.3-1
04.31A Determination of Spar Loading	.3-1
04.31B Determination of Running Chord Load	.3-5
04.31C Determination of Running Load and Torsion at Elastic Axis	.3-5
04.31D Lift-Truss Analysis	.3-7
04.31E Wing Torsion Tests and Determination of Coefficient of Torsional Rigidity C_{TR}	.3-8
04.311 Beams	.3-12
04.311A Wood Spars	.3-12
04.311B Metal Spars - General	.3-12
04.311C Truss Type Metal Spars	.3-14
04.311D Thin-Web Metal Spars	.3-15
04.311E Stressed-Skin Wings	.3-15
04.313 Ribs	.3-17
04.313A Test Requirements	.3-17
04.313B Test Loadings	.3-17
04.32 Proof of Tail and Control Surfaces	.3-18
04.321 Rigging Loads	.3-18
04.323 Vibration Tests	.3-18
04.33 Proof of Control Systems	.3-24
04.34 Proof of Landing Gear	.3-24
04.340 Energy Absorption Tests	.3-26
04.340A General	.3-26
04.340B Main Gear Tests - First Method	.3-26
04.340C Main Gear Tests - Second Method	.3-29
04.340D Tests of Tail Wheels and Tail Skids	.3-30
04.340E Tests of Nose Wheel Type Gear	.3-30
04.340F Tests at Provisional Weight	.3-30

* (See NOTE page g)

	Page No.
04.36 Proof of Fuselages and Engine Mounts	.3-31
04.36A General	.3-31
04.36B Stress Analysis Procedure	.3-31
04.36C Special Analysis Methods	.3-34
04.36D Analysis of Stressed-Skin Fuselages	.3-36
04.37 Proof of Fittings and Parts	.3-36
04.4 DETAIL DESIGN AND CONSTRUCTION	
04.40 General	*
04.400 Materials and Workmanship	.4-1
04.401 Fabrication Methods	*
04.402 Joints, Fittings and Connecting Parts	.4-3
04.403 Tie Rods and Wires	.4-6
04.404 Flutter Prevention Measures	.4-7
04.404A General	.4-7
04.404B Rigidity	.4-9
04.404C Mass Balancing	.4-11
04.404D Frequency Ratio	.4-13
04.404E Detail Design	.4-16
04.41 Detail Design of Wings	*
04.411 Wing Beams	*
04.415 Fabric Covering	.4-18
04.416 Metal-Covered Wings	.4-20
04.42 Detail Design of Tail and Control Surfaces	.4-20
04.421 Stops	.4-22
04.422 Hinges	.4-22
04.423 Elevators	.4-22
04.424 Dynamic and Static Balancing of Control Surfaces	.4-23
04.425 Wing Flaps	.4-31
04.426 Tabs	.4-31
04.43 Detail Design of Control Systems	.4-33
04.431 Stops	.4-35
04.432 Joints	.4-35
04.434 Flap Controls	.4-35
04.435 Tab Controls	.4-35
04.437 Single-Cable Controls	.4-35
04.44 Detail Design of Landing Gear	.4-36
04.440 Shock Absorption	.4-36
04.444 Retracting Mechanism	.4-37
04.45 Hulls and Floats	.4-37
04.450 Buoyancy (Main Seaplane floats)	.4-38
04.451 Buoyancy (Boat Seaplanes)	.4-38
04.452 Water Stability	.4-38
04.46 Fuselage and Cabins	*

* (See NOTE page g) (f)

CIVIL AERONAUTICS MANUAL

		Page No.
APPENDIX I	An Interpretation of CAR 04.003 For the Case of Large Airplanes	I-1
APPENDIX II	Sample Weight and Balance Report	II-1
APPENDIX III	Biplane Wing Lift Coefficients	III-1
APPENDIX IV	(To Be Supplied)	IV-1

NOTE: Sections denoted by asterisks do not appear in this Manual but subdivisions of such sections are contained herein.

CIVIL AERONAUTICS MANUAL

.0 GENERAL

.00 DEVIATIONS

1. The requirements are based on the present development in the science of airplane design. Experience indicates that, when applied to conventional types of design, they will result in an airworthy aircraft. New types of aircraft and new types of construction may, however, incorporate features to which the requirements cannot be logically applied. In such cases it is necessary that the applicant show:

   a. that the requirement is not applicable because the airplane is shown to be unconventional with respect thereto.
   b. that the objective on which the requirement is based can be shown to have been met.

2. As used in CAR 04 "unconventional" refers not only to deviations from the conventional with respect to general design and design details, but also with respect to size. As the requirements of CAR 04 have been based largely on experience with airplanes weighing less than 30,000 pounds, they cannot logically be extended to aircraft of considerably greater size. Appendix 1, containing suggestions on the trend of the requirements for large airplanes, has therefore been included for the information of designers.

.01 CLASSIFICATION OF AIRPLANES. (To be furnished later)

.02 AIRWORTHINESS CERTIFICATE

1. An Airworthiness Certificate is a document issued by the Administrator certifying that the aircraft is considered airworthy when operated in accordance with the operation limitations (including restrictions, if any) listed on the Aircraft Operation Record attached thereto. An aircraft is assigned an identification mark according to its degree of airworthiness. There are three types of identification mark designations, the NC, NR, and NX.

2. NC Designation. This type of identification mark is assigned to those airplanes which fully comply with the airworthiness requirements of the Civil Air Regulations.

3. NR Designation. This type of identification mark is assigned to those airplanes which comply with the airworthiness requirements of the Civil Air Regulations except in some limited respect but are in condition for safe operation for particular activities.

In such cases the lack of compliance with certain of the requirements will be compensated for by operation limitations and restrictions other than those normally employed under the NC designation. Where possible, use should be made of the NC designation; i.e., the NR should not be considered as a means of avoiding the necessity for showing compliance with the usual airworthiness requirements. Further, the NR designation should be applied only to aircraft which are ineligible for the NC designation. In general, NR aircraft will be those used in an industrial operation. However, each case will be handled on its individual merits upon presentation of proper data to the Administrator.

4. NX Designation. This type of identification mark is assigned to those airplanes which have not demonstrated compliance with the airworthiness requirements of the Civil Air Regulations, but which in the opinion of an authorized representative of the Administrator exhibit no apparent unairworthy features and are in condition for safe operation for experimental purposes.

.03 TECHNICAL DATA REQUIRED

1. When technical data are submitted as a basis for an airworthiness certificate they should include information which, in conjunction with suitable inspection and test procedure, will enable the Administrator to determine whether the aircraft is eligible for such certificate. All technical data submitted by the applicant for the Administrator's file will be held confidential and will be used only in connection with the airworthiness rating of the airplane or airplanes to which such data apply; provided, however, that the Administrator may at his discretion make such use of the confidential data as is required in the interests of public safety. Access to confidential data will be provided to accredited representatives of the holder of, or applicant for, a pertinent type certificate. Confidential data will not be used for reference purposes in connection with the repair, alteration or remodeling of certificated airplanes by persons other than the holder of the pertinent type certificate without the written consent of such holder unless he is out of business or has given the Administrator blanket permission for such use.

2. A technical data file for each model airplane for which a type certificate is desired is necessary. This means that a complete file for each model is required to the extent that reference can be made to previously submitted data for a similar model. When the Application for Type Certificate and the Application for Production Certificate forms are submitted, they should refer to the particular models involved. When more than one model is covered by the technical data submitted, separate applications for type certificate should be executed and forwarded for each model.

.030 SUBMISSION TO BRANCH OFFICE.

1. When data are submitted to a branch office of the Administrator, an extra copy of the three-view drawing, main assembly and installation drawings, drawing lists, applications, reports, all electrical system data, including a running load analysis, and all powerplant reports and assembly drawings should be included for the Washington office files. Failure to follow this procedure may lead to serious and undesirable delay for the manufacturer in the examination of data requiring the attention of the Washington office.

.031 DATA REQUIRED FOR AIRWORTHINESS CERTIFICATE.

1. General. When an airworthiness certificate only is desired, the data required is dependent on the particular problems involved in the design concerned. The minimum data needed as a basis for the issuance of an airworthiness certificate for a single airplane for which a type certificate is not sought or has not previously been issued, are as follows for the NC designation:

a. A three-view drawing of the airplane, to a designated scale, specifying the external dimensions, manufacturer's designation, engine model designation, design weight, empty weight, wing and control surface areas, seating arrangement, fuel and oil capacity, baggage capacity (in pounds) and equipment supplied.

b. A complete explanation of the current status of the model airplane involved.

c. Such additional technical data as are deemed necessary by the Administrator. The applicant is free to develop and present any means he can for showing compliance with the specified requirements. Reports on satisfactory strength tests may be substituted for strength analyses. In most cases it is desirable that a personal contact be made to supplement the material presented for consideration.

The above may, and usually will, also apply to an aircraft for which an NR identification mark is desired, but will not in general, apply to an aircraft for which an NX identification mark is desired, since airplanes in this latter designation may be certificated by a representative of the Administrator upon a satisfactory visual inspection only.

2. Service Types. In the case of service type airplanes, the additional data deemed necessary by the Administrator under 1c above will include at least the following:

a. A comparison with the service type, describing the differences, if any.
b. Such drawings and technical data as are necessary to substantiate all of the differences in the primary structures described in accordance with a above.
c. A copy of the Army or Navy specification(s) pertinent to the basic service type.
d. Summary data, certified to by the Air Corps or the Bureau of Aeronautics, whichever agency is involved, making clear the exact status of its final approval and acceptance of the service type, particularly with respect to gross weight, design speeds, equipment, approved center of gravity range, flutter and vibration, and flight characteristics.
e. One copy each of the complete drawing and equipment lists.

.032 DATA REQUIRED FOR TYPE CERTIFICATE

1. As a basis for type certification the data listed in the following paragraphs should be submitted.

.0320 DRAWINGS

1. A set of drawings should be submitted in blueprint form, or equivalent. Drawings should be folded to a size approximately 9" x 12", and should contain at least the following information:

a. The manufacturer's designation of the original model to which each drawing applies.
b. All dimensions essential to the reproduction of an identical airplane in respect to structural strength and dimensions.
c. All dimensions essential for checking the structural analysis.
d. Specifications of all materials used in the primary

structure, including the guaranteed physical properties in the case of materials the strength properties of which are developed through manufacturing processes, and specifications of all bolts, nuts, rivets and similar standard parts essential to the strength of the structure.

e. Details of the primary structure, seating arrangement, exits, control systems, powerplant installations, equipment installations, and other factors affecting the airworthiness of the airplane, except that adequate photographs may be substituted for drawings of the powerplant installation, including cooling and exhaust systems. Such photographs shall be made from marked negatives indicating the dimensions and materials of the piping and fittings. In any case diagrammatic layouts of the fuel and oil systems should be submitted.

f. Revision blocks stating the nature of the revision and the date it was made. The checking of revised drawings of relatively large size will be expedited if the change letters are printed in two perpendicular margins opposite the revision on the drawing in addition to being included on the revision block. Each change must be adequately described in the revision block of the drawing unless it is so described in a copy of a shop change notice attached to the changed drawing when submitting it to the Administrator for approval.

g. A three-view drawing of the airplane, to a designated scale, specifying only the external dimensions of the airplane (including dimensions and areas of wing and control surfaces) and the airplane and engine model designations. Do not include items of equipment on the three-view drawing, as this serves no useful purpose, the equipment being covered by a separate list. Likewise, all references to performance should be omitted.

h. An electrical wiring diagram and conduit installation drawings containing information pertaining to the rating, manufacturer's name and the model designation of items of electrical equipment.

2. Attention to the following list of frequently omitted items will be of assistance in expediting the work of the Administrator:

a. Complete dimensions, and references to all standard parts such as bolts, nuts and rivets used in assembling a given part.

b. Adequate material specifications and bend radii on all shop drawings.
c. Location and details of control system pulleys and of control surface stops.
d. Suitable assembly drawings showing the method of assembly and calling out the detail parts required for all major installations.
e. Adequate drawings and descriptions of the operation retractable landing gear control devices.
f. Drawings to show provision for expansion in oil tanks.
g. Details of measuring devices for fuel and oil tanks.
h. Complete structural drawings of all components.

3. Whenever a drawing previously submitted for one model is also applicable without change to a new model, an additional copy of the drawing is not required. However, as noted below, the drawing list should include a reference to the particular model airplane for which the drawing was originally submitted. Whenever the manufacturer's drawing number system permits, all drawings received by the Administrator are filed in a single consecutive file. The drawings list for each model will in this case be filed separately according to the pertinent model. In this manner duplication of files may be avoided.

.0321 DRAWING LIST

1. A drawing list should be submitted in duplicate, listing in numerical order or by suitable classification the number and title of each drawing submitted under CAM 04.0320. The drawing list should include references to all drawings originally submitted in connection with applications for airworthiness rating of other models and which apply to the model in question without change. The drawing list should also indicate, by letter, the latest revision of each revised drawing. In preparing the lists it is desirable that the drawings be grouped according to the airplane component concerned such as Wing Group, Fuselage Group, etc. Within each group the drawings should be listed in consecutive order.

2. In the case of large airplanes the list of drawings becomes very extensive. If the manufacturer uses a straight numerical numbering system it may become necessary to supplement the official drawing list arranged according to consecutive numbers by another list arranged according to components and subassemblies. The latter list will be used only as a ready reference for locating information in the file and need not be kept up to date according to the latest drawing changes. Such supplementary lists need not be submitted in duplicate.

3. When submitting data for approval of revisions to an approved file, the pertinent pages of the drawing list should be attached in duplicate. The data of the latest revision should be noted on the pertinent pages.

4. The drawing lists which are required to be submitted in duplicate for each approved file may take various forms dependent upon whether the drawings submitted pertain to one or more models. Sample lists to demonstrate an acceptable form for the usual cases involved are shown in Fig. 1.

.0322 EQUIPMENT LISTS.

1. Lists specifying the equipment supplied with each airplane should be submitted. The location, weight and model designation of each item of equipment, including the additional weight necessary for installation should be specified. A recommended form for equipment lists is shown in Fig. 2. This list shows a method of handling items in a simplified form which may include a number of related models and which makes it unnecessary to prepare separate lists for each model.

2. In the checking of equipment lists by the Administrator, particular attention is paid to ascertain:

a. The effects of the equipment installation on the aircraft structure. The examiner ascertains that satisfactory analyses and drawings are submitted for such items as batteries, radios, extra fuel tanks, flares, etc;
b. that items for which approval is required, such as wheels, safety belts, etc., are of an approved type; and
c. the effects of the equipment installation weights on the longitudinal balance of the airplane. (See also CAM 04.0531.)

3. The following information is often incorrectly or incompletely supplied in preparing the required equipment lists. Careful attention to these details will prevent delays from this source.

a. The model designation of both propeller hub and blades should be specified together with the range in diameter for which approval is desired. Information regarding constant speed control units, etc., should be included.
b. Optional fuel and oil tank installations should be specified with pertinent weights, capacities and locations thereof. When the horizontal arm of the fuel or oil in the tank is different from the arm of the tank installation the list should include both arms.

SAMPLE DRAWING LISTS
(Ref. CAM 04.0321)

I. List when only one new model is involved.

MODEL 10 DRAWING LIST

Drawing No.	Change	Title	Originally Submitted For Model
		WING GROUP	
22001	B	Frame Assembly, Outer Wing	10
22002	K	Spar Assembly, Outer Front	10
		FUSELAGE GROUP	
		POWERPLANT GROUP - Etc.	

Latest Revision 7/21/37.

II. List when new model has only minor variations from previously approved basic model (10).

MODEL 11 DRAWING LIST

With the exception of the drawings listed under A and B below the drawing list of Model 10 applies also to Model 11.

A. Model 10 Drawings not pertinent to Model 11. (See arrangement under I above.)
B. Drawings pertinent to Model 11 which are in addition to Model 10 list less group A above. (See arrangement under I above.)

III. List when new model is a major revision of a previously approved model or models.

MODEL 15 DRAWING LIST

Drawing No.	Change	Title	Originally Submitted For Model
		WING GROUP	
25001	---	Frame Assembly, Outer Wing	15
25002	---	Spar Assembly, Outer Front	15
25003	A	Fitting, Front Spar, Root Attachment	10
25004	E	Fitting, Front Spar, Strut	11
		Etc.	

Latest Revision 3/27/38

Fig. 1

RECOMMENDED FORM FOR
EQUIPMENT LISTS

CLASS I ITEMS

Item No.	Item	Make and Model	Horiz. Arm From Datum*	Weights Used on Models				
				A	B	C	D	E
1	NACA Cowl	Drwg. No. 39700	-48	28.0	28.0	31.0	33.0	33.0
2a	Propeller - Wood	Hartzell 669M	-67	42.0	42.0			
2b	Propeller - Fixed Metal	Curtiss 55501	-66			51.0	51.0	51.0
3	Starter - Direct Electric	Eclipse E-80	-36	20.0	20.0	20.0	20.0	20.0
4	Generator - Engine Driven	Eclipse LV-180	-36			18.0	18.0	18.0
5	Storage Battery	Exide 6-T-S-7-1	-32			36.0	36.0	36.0
6	Battery Box		---	---	---	---	---	---
7	Position Lights	Grimes A	---	---	---	---	---	---
8	Landing Lights	Grimes Retractable	9			11.0	11.0	11.0
9	Instruments a. Compass b. Altimeter c. Tachometer							
10	Safety Belts (5)	Rusco AE-200	---	---	---	---	---	---
11	Fuel Tanks - Two 35 gal.	Drawing No. 39724	30	---	---	---	---	---
12	Oil Tanks - One 5 gal.	Drawing No. 39745	-32	---	---	---	---	---
13	Bonding	------	---	---	---	---	---	---
14	Oil Cooler	Drawing No. 17091	-48	---	---	---	---	---
15	Wheels (List tires when a special type or size is required)	Hayes 651 M	7	75	75	75	75	75
16a	Carburetor Air Heater	Drawing No. 32001	-40					
16b	Carburetor Air Heater	Drawing No. 32002	-40					

OPTIONAL EQUIPMENT

(Includes Class II and Class III)

Item No.		Make and Model	Used on Models	Total Instln. Wt. (*Net Increase over Class I)	Hor. Arm From Datum*
20	Flares-Parachute	International Mark I 3-1 1/2 Minute Electric	All	17.0	106
21	Extra 20 gal. fuel tank (Plus 6 gal. oil tank-No increase)	Drawing No. 39670	C,D,E	12.0	79
22	Special Upholstering				
	a. Leather	Full Grain	All	30.0	45
	b. Leather Seats only	Full Grain	All	11.0	41
23	Special Instruments				
	a. Large Compass	Pioneer Straitflight	All	6.0	-13
	b. Thermocouple Installation	Weston 602 (Single Lead)	All	1.5	-13
	c. Etc.				
24.	Generators				
	a. Engine driven				
	1. Bosch	LE 70/12 R5	A,B	13	-34
	2. Bosch	LE 70/12 R6	C,D,E	-8.0	-32
25.	Radio Equipment				
	a. Receivers				
	1.	RCA-AVR-7 Series	All	24	+9
		(Chassis and Power Supply)		18	-10
		(Controls and Wiring)		6.0	
	b. Compasses				
	1.	RCA-AVR-8	All	64.0	20
		(Chassis and Power (Supply)		43.0	15
		(Hoop Assembly)		10.0	40
		(Controls and Wiring)		11.0	15

* Distances measured aft of the datum are positive, those forward are negative.

(REF. CAM 04-0322)

FIG. 2 RECOMMENDED FORM FOR EQUIPMENT LISTS

c. Items which include a number of distributed parts, such as a radio, should be listed with the installation weight and its arm for balance purposes, but the location of the main units should also be given.
d. Wheels, tires and such items should be specified by model designation, name of manufacturer and size, and the weights and horizontal arms should be given.
e. The weights of certain items such as position lights, safety belts, and special throttle controls need not be specified but the list should include the model designation and name of manufacturer in order that it may be determined whether or not they are of an approved type.
f. For special items such as carburetor heaters, oil coolers, etc., which may not have a model designation, the pertinent drawing number should be specified.
g. The weight of items of equipment should be given to the nearest pound.

.0323 PRELIMINARY WEIGHT AND BALANCE REPORT

1. A report should be submitted in which the range of center of gravity locations for which rating is sought is determined versus weight and with respect to suitable reference planes or lines. This report determines the CG positions and the weights to be used for design purposes. It should include the Balance Diagram (CAM 04.0324) and the Weight Table (CAM 04.0325). If the limits of the final range as determined during the Type Inspection appreciably exceed the design limits, use of the final values should be substantiated insofar as they affect the design computations.

.0324 BALANCE DIAGRAM

1. The report required in CAM 04.0323 should include a diagram showing the location of the centers of gravity of the component parts of the airplane and its contents, and the location of a suitable reference chord for the wing system, and the location of the assumed center of pressure of the horizontal tail. The locations of these items should be indicated by reference to suitable horizontal and vertical planes.

2. The amount of detail necessary in preparing an acceptable balance diagram will vary considerably depending upon the size of the project and the variations in possible loading conditions. When large variations in the amount of equipment are expected, it may be desirable to use a separate equipment balance diagram. The balance diagram should include the following:

a. Outline of the airplane (side view).
b. Horizontal and vertical scales. For horizontal arms it is preferable that the datum be chosen at some definite and accessible point on the airplane, such as a point at the leading edge of the wing. This facilitates checking in the field. Distances aft of this point are generally assumed as positive and those forward as negative. For vertical arms the datum may be chosen at some arbitrary location below the extended landing gear, so that all distances are up and positive.
c. Item designations. These designations (usually numbers) should correspond with the designation used in the weight table and, when possible, with the designations used in the equipment list and weight and balance reports.
d. Item Locations. The various items should be shown in the proper location on the outline noted in (a) above. Such location may be indicated by a small circle together with the item designation noted in (c) above.
e. Dimensions. The following should be given:

(1) Length of MAC.
(2) Horizontal distance from datum to the leading edge of the MAC.
(3) Vertical distance from the datum to a definite and accessible point on the airplane such as the centerline of the propeller.

3. A suggested form for the balance diagram for an airplane in the one to five place size range is shown in Fig. 3.

4. For large airplanes, and especially airline aircraft having many possible loading conditions, a more detailed balance diagram is necessary in order to permit a ready check of many of the component items. The following method is suggested as one possible means of solving the problem satisfactorily for practical use.

a. Prepare an outline drawing (side view), with established vertical and horizontal reference planes located relative to some fixed point on the airplane structure. Include certain additional parallel auxiliary reference planes, called stations, designated by their distance in inches from the established reference planes. If possible, such station designations should agree with designations normally used in specifying stations of the structure and in locating various equipment of structural items shown on major assembly drawings or equipment installations.

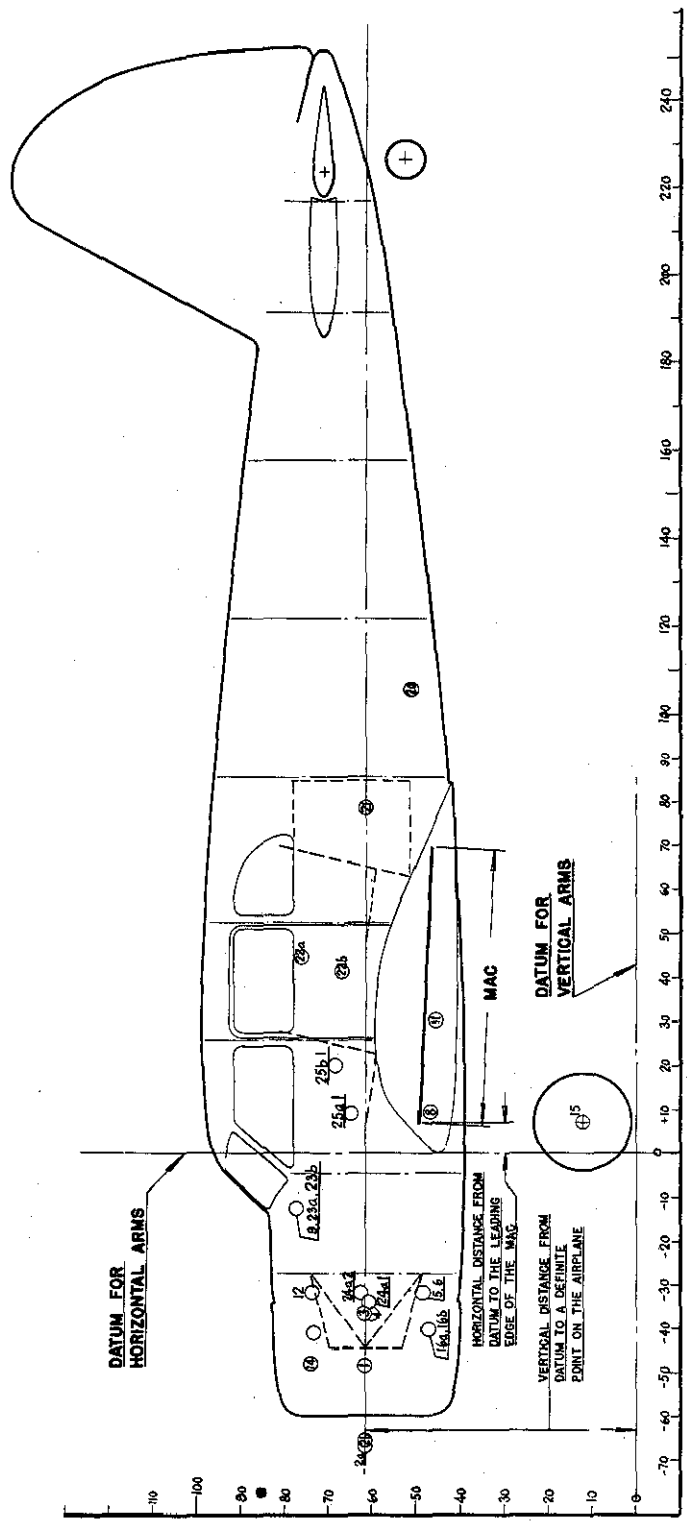

REF. CAM 04.0324

FIG. 3 SAMPLE BALANCE DIAGRAM

b. In cases where it is not practical to show each items as an individual number on the diagram, due to the large number of items involved, the CG's of groups of related items may be determined and each such CG shown as a single item on the balance diagram.

.0325 WEIGHT TABLE

1. The report specified in CAM 04.0323 . should include a table or list of the weights of all component parts of the airplane and its contents. The weights shown in the table should be broken down and itemized so that they may readily be used in the structural analysis reports of the individual components such as Wing, Fuselage, Engine Nacelles, etc.

.0326 STRUCTURAL REPORTS

1. A structural report should be submitted in which the strength of the structure is determined with reference to the strength requirements specified. The structural report should include the computations of the required limit loads and should demonstrate the ability of the structure to develop the required factors of safety with respect to these loads either by analytical methods satisfactory to the Administrator or by reference to authenticated test data, or by a combination of both. Note that CAM 04.0501 provides for discontinuance of the examination of reports in event that they contain errors which render them unsatisfactory. In order to avoid delays in the checking of data it is recommended that all computations be given an independent check by the manufacturer and be signed by both the original computer and the checker. A preferred form of title page, and of title block of subsequent pages, of engineering reports is shown in Fig. 4.

.0327 STRUCTURAL ANALYSIS

1. Computations submitted as part of the structural report should include a table, or tables, including the minimum margins of safety computed for all structural members and should bear the signature of the responsible engineer or engineers.

2. The history of past airplane model designs shows that in practically all cases the original design weight is increased sometime during the life of the project. In order that the approval of such changes may be handled without undue effort and resultant delay it is essential that each structural analyses report contain a table summarizing the minimum margins of safety determined in the body of the report. Such report tables should include the name of the element involved (such as spar), design condition, margin of safety, and page number reference.

(Sample title page for engineering reports)

NAME OF MANUFACTURER

AIRPLANE* MODEL NO.

REPORT NO.

TITLE OF REPORT

Date_____ Prepared by _____

Revisions_____ Checked by _____

_____ Approved by_____

_____ Witnessed by _____

_____

_____

* or Engine, Propeller or Equipment

Subject_____	MANUFACTURER	Page _____
Prepared By _____		Model _____
Date _____		Report No. _____
Checked By _____		

(Sample title block for report pages)

REF. CAM 04.0326

FIG. - SAMPLE TITLE PAGE AND TITLE BLOCK

0328 TEST REPORTS

1. Test reports submitted as a part of, or referred to in, the structural report should bear the signature of the Administrator's representative who witnessed the tests, except in the case of minor tests, in which case the applicant's certification that the report accurately represents the complete results of the tests will be accepted.

2. In the preparation of test reports submitted to the Administrator as partial proof of a given structure it is essential that they contain as a minimum the following information:

a. Determination of tests loads (including references to pertinent page and number of stress analysis report).
b. Distribution of loads during test.
c. Description and photographs of test set-up. (Detail views are necessary in some cases.)
d. Description of method of testing.
e. Results of tests, including photographs of structures found to be critical.
f. Log of deflection data. (Including sketches to show location of points at which the deflections were measured.)
g. Curves of deflection vs. load for each such point to permit determination of any evidence of permanent set.
h. Signature of Administrator's representative(s) and manufacturing engineer(s) who witnessed the test.
i. Signature of company engineer(s) responsible for test report.

.0329 SCHEDULE FOR SUBMITTING DATA

1. When submitting data for a type certificate for large projects that may require the attention of the Administrator for an extended period of time, it is desirable that information as to the schedule of approximate dates when the data will be received by the Administrator be forwarded at an early date. A sample of a preferred schedule of this nature is shown in Fig. 5.

.04 INSPECTION AND TESTS

1. For Type Certification. The procedure for inspection and tests where type certification is involved is outlined in CAM 04.05 below.

2. For Airworthiness Certification. The procedure for inspection and tests where an airworthiness certificate only is desired and type certification is not involved will include such parts of CAM 04.05 below as deemed necessary by the Administrator.

SAMPLE SCHEDULE OF SUBMISSION OF MODEL 120 TECHNICAL DATA TO THE CIVIL AERONAUTICS ADMINISTRATION

1.	Initiate Correspondence Regarding Plans for New Project	July 1, 1937
2.	Conferences and Correspondence re Special or Unconventional Features	August 1, 1937
3.	Structural Research Data	January 1, 1938
4.	Determination of Applied Loads	February 15, 1938
5.	Preliminary Weight and Balance Report	February 15, 1938
6.	Drawing and Equipment Lists	May 1, 1938
7.	Wing Group	May 1, 1938
8.	Engine Mount	May 1, 1938
9.	Landing Gear	May 15, 1938
10.	Tail Wheel	May 15, 1938
11.	Nacelle	May 15, 1938
12.	Tail Group	June 1, 1938
13.	Control System	June 1, 1938
14.	Fuselage	June 1, 1938
15.	Miscellaneous Tests	With Pertinent Group.
16.	Control Surface and Control System Proof and Operating Tests; Dynamic Drop Tests	October 1, 1938

The above dates represent the best present estimate of the dates at which the reports with assembly and detail drawings necessary for check can be submitted to the Administrator.

Fig. 5

.05 PROCEDURE FOR TYPE CERTIFICATION

.050 EXAMINATION OF DATA

.0500 PARTIAL DATA

1. The Administrator will examine partial units of the required technical data provided that each such unit is complete in itself with respect to both analyses and drawings.

.0501 DISCONTINUANCE OF EXAMINATION

1. Examination of any technical data, including drawings, submitted in connection with an application for airworthiness rating, will be discontinued if errors, omissions, or lack of references are found which, in the opinion of the Administrator, render the data unsatisfactory as a basis for proving compliance with the airworthiness requirements. The examination will be continued upon correction of the data to the Administrator's satisfaction. Minor errors and omissions, the effects of which can be readily evaluated, will not constitute cause of discontinuing examination of technical data.

.051 STRUCTURAL INSPECTION

1. An official representative of the Administrator will conduct such inspections of the structure and methods of fabrication as are deemed necessary by the Administrator prior to completion of the airplane and will witness structural tests in compliance with these regulations.

.052 TYPE INSPECTION AUTHORIZATION.

1. A type inspection will be authorized upon fulfillment of the following:

   a. Completion of examination of the structural report and drawings and correction by the applicant of all errors and omissions which, in the opinion of the Administrator, must be corrected before authorization of the type inspection.
   b. Completion, and acceptance by the Administrator, of all structural tests required as part of the structural report or to prove compliance with the requirements herein specified.
   c. Submission of the necessary test reports and their acceptance by the Administrator.

.053 TYPE INSPECTION PROCEDURE

1. The type inspection should consist of a ground inspection and a flight test of an airplane built to conform with the technical data previously submitted and approved and on which the authorization of the type inspection was based. The following subparagraphs should be complied with in connection with the type inspection.

.0530 STATEMENT OF CONFORMITY

1. The manufacturer should present to a designated inspector of the Administrator a certified statement of conformity, upon a form to be supplied by the Administrator, in which his chief engineer or other responsible technical representative should certify that the airplane submitted for type inspection has been manufactured in accordance with the latest technical data submitted to and approved by the Administrator (including all revisions and additions required by the Administrator in connection with authorization of the type inspection) except for any deviations therefrom, which should be listed and described.

.0531 WEIGHT AND BALANCE REPORT

1. The airplane should be weighed and its balance determined in the presence of an authorized representative of the Administrator, and the manufacturer should submit to such representative a complete report covering the determination of the weights and center of gravity locations for which certification is desired.

2. A recommended form for weight and balance reports is given in Appendix II. This report is based upon the actual weight of the airplane and the loadings as flown in the type tests. CAR 04.7 should be noted in connection with this section.

3. As the weight and balance report determines the equipment classification used on the pertinent aircraft specification, the following explanation of such classification is given:

a. Class I (Required equipment) includes all items which must be installed on the airplane at all times in order that the airplane may be deemed airworthy from all standpoints; i.e., structural, operational, aerodynamical and balance. For example, if an oil cooler is used to comply with the engine cooling requirements, the oil cooler is classified as Class I equipment. Similarly, if an airplane is equipped with electrically operated wing flaps or an engine with battery ignition, the power source is classified as Class I equipment. Wheels,

propellers, safety belts, required fire extinguishers, etc., are obviously Class I equipment. In addition to the above type of required equipment it is often necessary to classify as Class I equipment, certain items which ordinarily would be optional equipment, due solely to the fact that the weight and balance report does not substantiate the removal thereof. For example, when an item of equipment, which would otherwise be optional, is included in checks of both the most forward and most rearward CG positions substantiated, it is classified as required equipment for balance purposes only. (See Sections 2(B) and 3(B) of the Sample Weight and Balance Report in Appendix II.)

b. Class II optional equipment includes all items which have been substantiated from structural, operational and aerodynamical standpoints, but not from a balance standpoint. All airplanes equipped with any Class II item must be checked to ascertain that the approved CG limits are not exceeded with the most adverse loadings possible. It should be noted that when any item of Class II equipment is added, all optional equipment (including equipment otherwise in Class III) becomes, in effect, Class II equipment. A recheck of balance is therefore required if any subsequent change in equipment is made while any Class II item remains installed.

c. Class III optional equipment includes all items which have been substantiated from structural, operational and aerodynamical standpoints, and from a balance standpoint assuming no Class II item is installed. In order for an item of equipment to be eligible for such classification it must be shown that the CG of the airplane, equipped with all Class I and no Class II items, will not exceed the approved limits under the following loading conditions:

(1) If the item adversely affects the most forward CG condition, when it and only that portion of the useful load (persons, fuel, oil and cargo) plus only those other items of Class III equipment which also adversely affect the most forward CG condition, are present.

(2) If the item adversely affects the most rearward CG condition, when it and only that portion of the useful load plus only those other items of the Class III equipment which also adversely affect the most rearward CG condition, are present.

Note: The weight of the pilot will of course be included in both conditions. Full oil is used in both conditions except in the case of air carrier aircraft.

d. It should be noted that any item of optional equipment having its CG located between the approved CG limits automatically becomes a Class III item of equipment.

.0532 APPLICANT'S FLIGHT TEST REPORT

1. Prior to, or at the time of, presentation of the airplane for flight tests, the applicant should submit to the Administrator's representative a detailed report of flight tests of the airplane involved. This report should be signed by the applicant's test pilot who should certify that the airplane has been flown by him in all maneuvers necessary for proof of compliance with the flight requirements and found to conform therewith, except that for very large airplanes this procedure may be modified as deemed necessary by the Administrator. In order to expedite checking of this report it is advisable that the results of the applicant's flight tests be recorded on a form of the type used by the Administrator in connection with the required flight tests. Copies of this form may be obtained from the Administrator's engineering inspector.

.0533 GROUND INSPECTION

1. Before conducting any flight tests, the Administrator's representative will complete the ground inspection to determine that all items affecting the safety in flight have been found satisfactory.

.0534 FLIGHT TESTS

The airplane will be subjected to such flight tests as are necessary to prove compliance with the flight and operation requirements specified in CAR 04.7 and to supply the pertinent information required upon the form specified by CAM 04.0532.

.0535 DISCONTINUANCE OF TYPE INSPECTION

1. If during any part of the ground inspection or flight test there is noted any unfavorable characteristic or defect which is considered sufficiently serious by the Administrator's representative to warrant discontinuing the type inspection until corrective measures have been taken by the applicant:

a. the Administrator's representative will note each unsatisfactory item upon a form supplied for the purpose, with sufficient detail so that it will be clear to all concerned;
b. one copy of such form will be transmitted to the manufacturer;
c. the manufacturer should advise the Administrator when the aircraft incorporating the required changes will be available for continuance of the type inspection; and

d. the manufacturer should furnish the Administrator with technical data descriptive of all structural changes, except those of an obviously minor nature, such changes to be substantiated by test, if necessary, and approved prior to resuming the type inspection.

.054 ISSUANCE OF AIRCRAFT SPECIFICATION

1. Upon satisfactory completion of all reports, tests and inspections required to prove compliance with the airworthiness requirements of the Administrator, an Aircraft Specification will be issued for the type and model of the airplane in question. The Aircraft Specification will certify as to the airworthiness of airplanes of the type in question when manufactured and maintained in accordance with the provisions noted thereon.

.055 ISSUANCE OF TYPE CERTIFICATES

1. A type certificate such as is described in CAR 02 will be issued to the applicant upon compliance with the requirements therein.

.056 AUTHENTICATED DATA

1. As a part of the type certificate, the Administrator will furnish the applicant, upon issuance of such certificate, one set of drawing lists on which the seal of the Administrator is impressed. These lists will show acceptance of the drawings as partial proof of the airworthiness of the type of airplane to which they apply.

.06 CHANGES

1. Change, Repair or Alteration of Individual Certificated Airplanes. Change, repair or alteration of a certificated airplane renders such airplane subject to re-certification as to airworthiness in accordance with CAR 18, but does not affect the type certificate on which the airworthiness certification may have been based. As a general rule extensive revisions of the primary structure should not be undertaken without the cooperation of the airplane manufacturer. Changes which appear to be unimportant might seriously affect the structural safety or flying qualities, making the airplane unsafe. The manufacturer is supplied with complete strength calculations from which information regarding the approved member sizes and material specifications can be obtained. Also, the manufacturer may have already obtained the Administrator's approval of the proposed change.

2. Changes by Holder of Type Certificate. The holder of a type certificate should apply for approval of any specific change or revision of the approved drawings or specifications which affect the airworthiness of the airplane and should submit sufficient technical data in the form of strength calculations and strength tests, or both, to demonstrate continued compliance with the airworthiness requirements hereinafter specified. Corrected pages of the drawing lists, in duplicate, should also be submitted. Alternate installations should be so designated and properly indicated on the drawing lists. If, in the opinion of the Administrator, the changes are such as to affect the performance or operating characteristics, appropriate tests may be required. Upon satisfactory proof that the revisions do not render the airplane type unairworthy the Aircraft Specification may be modified to include airplanes embodying the approved changes and sealed copies of the revised drawing list pages will be returned to the applicant. The manufacturer should maintain a record of the airplane serial numbers to which the changes apply.

3. Changes by Persons Other Than Holder of Type Certificate. Changes such as described above, when made by persons other than the holder of the type certificate, are also subject to the procedure outlined above, except that the written consent of the holder of the type certificate should be obtained if it is desired to refer to technical data originally submitted to the Administrator in connection with type certification. With the consent of both the person making the change and the holder of the type certificate, all airplanes manufactured under the type certificate may be made eligible for such change by an appropriate revision of the pertinent Aircraft Specification.

.060 MINOR CHANGES

1. The procedure to be followed in obtaining approval of minor changes to airplanes manufactured under the terms of a type certificate will largely depend on the nature of the change involved. As soon as time will permit additions will be made to this manual covering certain specific changes in addition to that covered in 2 below.

2. When a tail wheel and tire are appended to a previously approved tail skid installation and the original provisions for shock absorption are left intact, the following procedure should be followed in obtaining approval of the change:

a. Submit the usual file drawings.

b. Substantiate the strength of skid structure and attachment to the fuselage if the point of contact with the ground of the proposed wheel installation is forward of the tail skid shoe contact point. For installations where the contact points coincide or the wheel is to the rear of the skid contact point, no structural investigation is required unless such procedure appears necessary.
c. Obtain inspection of installation and weight check by a representative of the Administrator.
d. Obtain recheck of landing and taxiing characteristics by a representative of the Administrator. No investigation of the status of the tire, strength of the wheel attachment to the skid, or the energy absorption capacity need be made.

.061 MAJOR CHANGES

A GENERAL

1. Major changes in existing designs will usually entail an appreciable expenditure of time and money on the part of the applicant for approval. Care should therefore be taken to determine the status of such changes with respect to the pertinent regulations, prior to any extensive rebuilding or conversion.

B INSTALLATION OF AN ENGINE OF A TYPE OTHER THAN THAT COVERED BY THE ORIGINAL TYPE (OR APPROVED TYPE) CERTIFICATE

1. It is generally understood that the purpose of most changes involving the installation of an engine of a type other than that covered by the original approval is to permit full advantage to be taken of improvements in engine performance which do not involve a material increase in engine weight. This is of direct benefit to the operator of the airplane, as it increases safety of operation and/or performance by improving take-off, climb, single-engine performance, true cruising speeds at altitude, engine reliability, and engine life between overhauls, with few (if any) changes in the aircraft structure. It should be carefully noted that these benefits will be difficult to obtain if the changes made require or involve an increase in the originally approved airplane gross weight or placard speeds. If the changes result in an increase in placard speeds, it will be necessary in any event to reinvestigate the structure for compliance with the flutter prevention measures referred to in CAR 04.404. Before making a change in engine it is always advisable for an owner to contact the manufacturer of the make of airplane involved to learn if the proposed change has ever been approved by the Administrator. If there is a record of approval, it is often a relatively simple matter to revise the airplane to conform with the manufacturer's approved data.

301230 O—41——3

2. The general procedure to be followed, when the rated power of the engine to be installed exceeds that originally used for design purposes or exceeds the rated power of the engine being replaced, is described in the following paragraphs. It consists, briefly, in substantiating the strength of the engine mount and adjacent structure for the take-off (one minute) power and for the local increase in weight, if any, and in limiting the engine output and indicated speeds for subsequent posting in the aircraft. The engine placard limits differentiate between the power permitted for continuous operation (maximum, except take-off), and that which has been approved for take-off only (take-off, one minute). The following procedure applies to modifications of existing designs but the principles will also apply to new designs under consideration.

3. To expedite handling and to reduce the usual exchange of correspondence to a minimum, the applicant for approval of the change should always supply a complete description of the proposed engine replacement. When an individual airplane is being modified it should be identified in the correspondence as to name of manufacturer, model designation, manufacturer's serial number and identification mark. In addition, a new or revised airplane model designation should be selected to distinguish it from the original model. The current status of the engine to be used, with respect to CAR 13, should be determined prior to the completion of any extensive changes. Field inspection personnel of the Administrator are supplied with this information and they will assist in the determination of the status of the engine in question. Copies of the approved engine specification can be obtained from the Administration's Publications and Statistics Division in Washington. If the details of the powerplant installation are affected, note that the pertinent requirements specified in CAM 04.0320-1(e) and CAR 04.6 call for certain approved file data.

4. The data submitted should include a comparison of the weights of the original and proposed engine installations. Appendix 1 of the Repair and Alteration Manual will be found useful in rechecking the balance. The aircraft specification, copies of which can be obtained from the Administration's Publications and Statistics Division, includes the approved center of gravity range.

5. Changes in engine mount structure and the local effects of an increase in engine weight must, of course, be investigated. The extent of such investigation will depend largely upon the amount of increased power

the applicant desires to use in take-off (one minute) and the remaining operations. See 7 below for references to operation limitations. See CAM 04.0320 for references to the information required on drawings submitted covering the changes made.

6. Airspeed Placard Limits. There are a large number of certificated airplanes in service which do not display the placard speeds specified in the current requirements. These airplane models were approved prior to the application of the 1934 edition of Aeronautics Bulletin No. 7-A in which the requirements for airspeed placards first appeared in the airplane regulations. In these cases when the rated power of the engine being installed exceeds that of the engine installation originally approved, the following airspeed limits should be displayed:

a. Level Flight or Climb: V_L.
b. Glide or Dive: $1.2V_L$. V_L is the actual indicated high speed in level flight obtainable with the power of the engine originally used.

If the applicant for approval wishes to raise these placard limits, there are no objections to his investigation of the case. The current requirements will serve as a guide for determining which components of the airplane and pertinent loading conditions or design criteria involve a consideration of design airspeeds. For cases in which airspeed placard limits were determined as part of the original approval, the use of an engine with rated power in excess of that originally used for design purposes will not require changes of the original airspeed placard limits. However, as previously mentioned, an attempt to increase these placard speeds will represent a revision of the basic structural design data and as such will usually require an appreciable amount of reinvestigation for purposes of determining whether the airplane structure can withstand the air loads incident to the increased performance. As a rule only the airplane manufacturer or an experienced engineer can efficiently make the necessary investigations. The Administrator does not initiate such studies.

7. Engine Placard Limits. The airplanes discussed in the first part of 6 above in most instances do not display the engine placard limits specified in the current requirements. In these cases when the rated power of the engine being installed exceeds that of the engine installation being replaced the following engine operation limits should be displayed:

a. Maximum, except take-off horsepower, not to exceed the output of the originally approved engine installation which is being replaced.
b. Take-off (one minute) horsepower, limited by:

(1) Approved take-off rating of engine. See CAR 04.60, CAR 13 and approved engine specification.
(2) Status of propeller used. See CAR 04.61, CAR 14 and approved propeller specification.
(3) Strength of engine mount structure. See CAR 04.26.
(4) Fuel flow capacity. See CAR 04.625.
(5) Engine cooling requirements. See CAR 04.640.

For cases in which engine placard limits were determined as part of the original approval of the airplane, the use of an engine with rated power different from that of the engine being replaced will require the display of new placard limits corresponding with the maximum permissible output determined by the following:

a'. Maximum, except take-off horsepower, limited by:
(1) Approved rating of engine. See CAR 04.60, CAR 13 and approved engine specification.
(2) Status of propeller used. See CAR 04.61, CAR 14 and approved propeller specification.
(3) Strength of engine mount structure. See CAR 04.26.
(4) Fuel flow capacity tests. See CAR 04.625. (There are a few supercharged installations for which the maximum, except take-off, rating is greater than the take-off rating. Therefore, the maximum, except take-off power, is used in determining the fuel flow required.)
(5) Full power longitudinal stability characteristics with rearmost center of gravity.
(6) Engine cooling tests. See CAR 04.640.
(7) Design power used in original analysis.

b'. Take-off (one minute) horsepower, limited by items listed in b(1) to b(5) above.

8. Inspection and Flight Tests. Following receipt and approval by the Administrator of file data satisfactorily accounting for the change in engine as discussed in the foregoing paragraphs, the usual inspection and a recheck of certain flight tests will be authorized. The extent of the flight tests will depend upon the nature of the replacement with respect to the original approval.

9. It will be of interest to designers to note that provision for future increases in engine power and airplane performance can easily be made in the original design by the following methods:

a. Assume a power loading of 12 pounds per HP in determining the maneuvering load factors. (See Fig. 04-3 of CAR 04.)
b. Design the engine mount, adjacent structure, and powerplant installation for the maximum power which might possibly be used in the future.
c. Assume a design level speed (V_L) considered high enough for all future operations. In this connection it should be noted that speed placards refer to "indicated" airspeeds and that the corresponding actual airspeed may therefore exceed the placard speed at altitudes above sea level.

C CONVERSION OF APPROVED TYPE LANDPLANE OR SEAPLANE TO APPROVED SKIPLANE STATUS

1. There are two distinct steps involved in obtaining the Administrator's approval of an airplane equipped with skis. These are as follows:

a. Approval of the ski model.
b. Approval of the airplane equipped with approved skis.

It should be noted that the approval of a ski and the approval of a ski installation are two separate cases. The Administrator's approval of a ski for a specified static load for quantity production under a type certificate does not imply approval of the ski installed on any certificated airplane. It means only that the ski itself is satisfactory. This is true also in the case of a single set of skis where no type certificate is involved.

2. Approval of the Ski Model. The strength of all skis must be substantiated in accordance with the requirements contained in CAR 15 (see also CAM 15) before they may be used on certificated aircraft, whether or not the designer or manufacturer desires to obtain a type certificate for the skis. The procedure for obtaining an approval for skis is explained in CAR 15.

3. Approval of an Airplane Equipped with Approved Skis. Certain airplane models are already approved with certain specific approved skis installed. The owner of a certificated airplane of some such model wishing to install skis, need only install skis of the model with which airplanes of his model are approved and his airplane will be approved with the skis installed, upon the satisfactory completion of an inspection of the installation by a representative of the Administrator. Should changes in the landing gear be necessary to accommodate the skis, the owner, of course, must make the changes in accordance with the change data approved by the Administrator. If

the airplane is of a model which has not been approved with the installation of skis of the particular approved model it is desired to install, the procedure hereinafter outlined should be followed:

a. Technical data showing any changes in the landing gear should be submitted to the Administrator for approval. This is not often necessary, as skis are usually designed to attach to the axles in place of the wheels.
b. Upon approval of the change data, if any, the installation must pass a satisfactory inspection by a representative of the Administrator.
c. During this inspection, the representative will obtain the weight of the ski installation and the weight of the wheel installation which has been replaced.
d. Upon completion of a satisfactory inspection, the representative will witness take-offs and landings, and other demonstrations if deemed necessary, of the airplane equipped with skis. The characteristics of the airplane equipped with skis must be acceptable to the Administrator's representative.

4. If the airplane inspected and tested is a standard airplane of a certain model and the skis installed are approved under a type certificate and manufactured under a production certificate or if the skis are manufactured under an approved type certificate, all airplanes of this model will be considered eligible for approval when equipped with skis of the model installed on the airplane inspected. The aircraft specification will identify the approval accordingly.

5. If the skis installed are <u>not</u> approved under an approved type certificate or were <u>not</u> manufactured under a <u>production</u> certificate, each airplane so equipped must undergo the tests of 3d above in order to be eligible for approval. The notes on the pertinent aircraft specification will list this distinction.

.062 CHANGES REQUIRED BY THE ADMINISTRATOR

1. Due to Revised Regulations. The type certificate permits production of aircraft under the terms of the airworthiness requirements in effect at the time of the type approval. Due to progress in the art, however, it may be advisable in rare cases, to require that airplanes being built under a type certificate be made to conform with a requirement made effective subsequent to the issuance of the type certificate.

2. Due to Unsatisfactory Service Experience. When unsatisfactory experiences are encountered in service it is the normal procedure for the manufacturer to prepare a service bulletin and forward it direct to the aircraft owners. Such service bulletins are usually prepared in cooperation with the Administrator. When the difficulty encountered is of sufficient importance to require immediate action an Airworthiness Maintenance Bulletin is prepared by the Administrator and is sent by registered mail to all owners to advise them of the nature of the difficulty, the corrective steps to be taken, and requesting them to contact an authorized representative of the Administrator regarding approval of the changes made. In addition a special note is generally issued as a supplement to the Aircraft Specification as a final check to insure that the particular item has been corrected by the time of the annual inspection.

.1 DEFINITIONS (INCLUDING STANDARD SYMBOLS, VALUES, AND FORMULAS)

A DEFINITIONS ADDITIONAL TO THOSE GIVEN IN CAR 04.1.

1. **Aerodynamic Center, a.c.** The point on the wing chord, expressed as a fraction of the chord, about which the moment coefficient is substantially constant for all angles of attack. The theoretical location is at 25 per cent of the chord. The actual location may differ from the theoretical location and may be determined from the slope of the moment coefficient curve as outlined in CAM 04.129C.

2. **Drag Area.** The area of a hypothetical surface having an absolute drag coefficient of 1.0.

3. **Equivalent Drag Area, S_D.** The drag area which, at a given value of dynamic pressure, will produce the same aerodynamic drag as the body or combination of bodies under consideration. (Note: $S_D = 1.28\ S_E$, where S_E is the equivalent flat plate area).

   a. S_{D_t} = estimated total drag area at high speed, in square feet. When the value of V_L is known or has been estimated, S_{D_t} can be determined by solving Eq. 16 in CAM 04. 1-C for d. When it is desired to estimate S_{D_t} first in order to compute the value of V_L, the equation $S_{D_t} = S_{D_f} + C_D S_W$ can be used. S_W refers to the total wing area exclusive of the area replaced by the fuselage and C_D can usually be assumed to be the minimum wing drag coefficient. Typical values of S_{D_f} (Drag area of airplane less wing) are given in Fig. 6.

4. **Margin of Safety, M.S.** The margin of safety is the percentage or fraction by which ultimate strength of a member exceeds its ultimate load.

   a. A linear margin of safety is one which varies linearly with the ultimate load.
   b. A nonlinear margin of safety is one which is based on stresses which are not proportional to the ultimate load. A nonlinear margin of safety is not a true measure of the excess strength of a member.

B STANDARD SYMBOLS

A -

a - position of aerodynamic center, fraction of chord; subscript "actual".

a.c. - aerodynamic center.

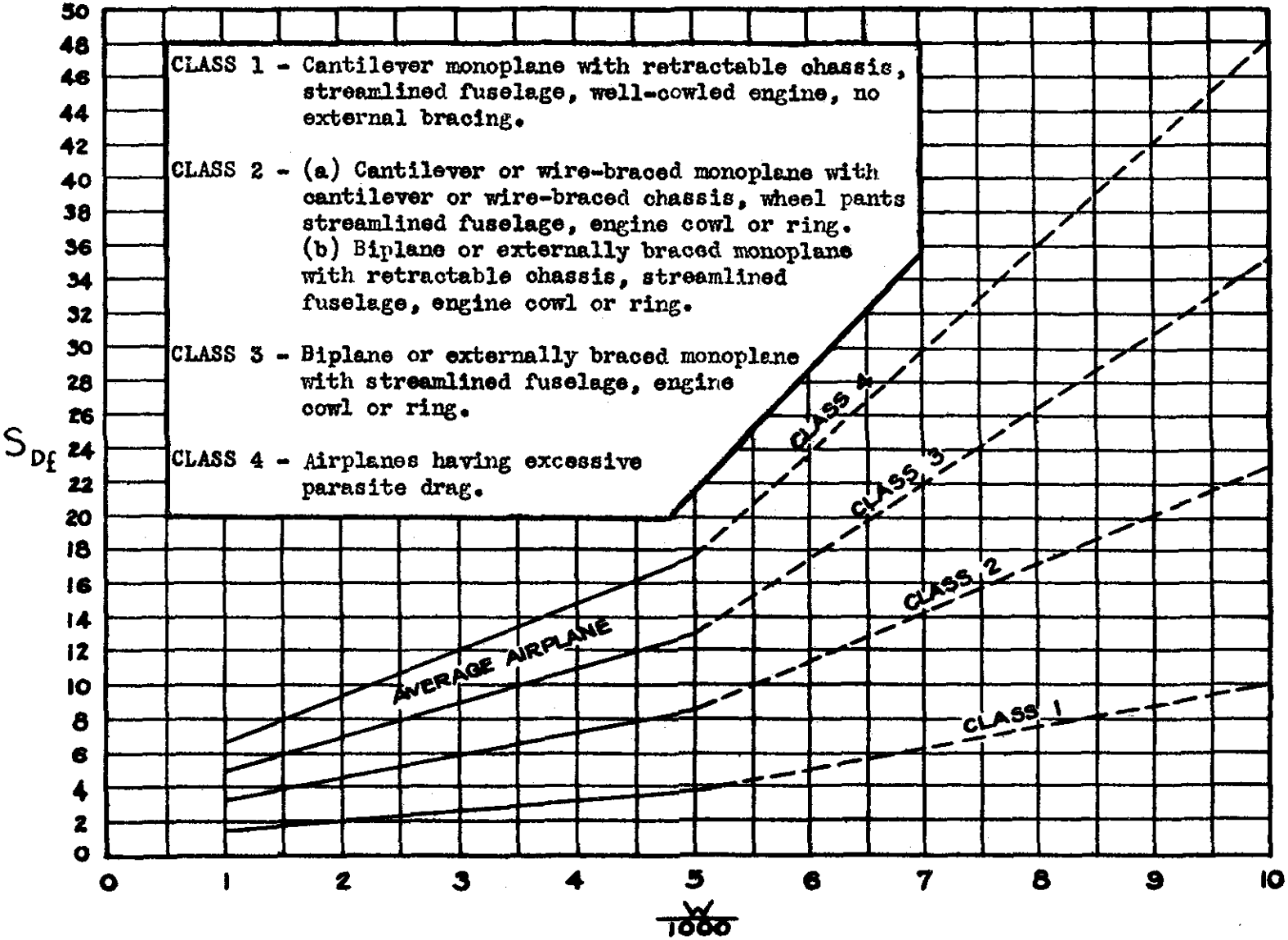

REF: CAM 04.1-A3

FIG. 6 VARIATION OF FUSELAGE DRAG AREA WITH GROSS WEIGHT

B -

b - distance between spars, fraction of chord; span of wing.

C - chord, feet; coefficient; constant; subscript, "chord".

CP - center of pressure, fraction of chord.

CG - center of gravity.

D - subscript "drag".

d - drag loading, lbs/sq ft.

e - unit wing weight, lbs/sq ft.

F - force, lbs.

f - unit stress, lbs/sq in; front spar location, fraction of chord; subscript, "fuselage".

g - acceleration of gravity (= 32.2 ft/sec^2); subscript "gliding".

HP - horsepower.

h - distance measured perpendicular to MAC, in terms of MAC.

i - subscript "induced".

j - position of wing CG, fraction of chord; factor of safety.

K - a general factor.

L - subscript "lift" or "level".

M - moment, ft lbs; subscript "moment".

m - slope of lift curve, ΔC_L/ radian; moment divided by W; subscript "maximum vertical".

MAC - mean aerodynamic chord.

MS - margin of safety.

N - subscript, "normal force".

n - load in terms of W (net value equals acceleration factor)*.

o - subscript, zero lift", "initial", "standard sea level".

P - design power (See CAR 04.105); load, lbs.

p - power loading, lbs/HP.

q - dynamic pressure, lbs/sq ft.

* Without subscript, n refers to an applied load normal to the basic wing reference chord.

R - resultant force or reaction, lbs; aspect ratio; subscript "resultant".

S - design wing area, sq ft. (See CAR 04.104)

S_D - equivalent drag area, sq ft. (See CAM 04.1 -A3).

S_E - equivalent flat plate area, sq ft.

T - tail load, lbs.

U - gust velocity, ft/sec.

V - airplane speed, mi/hr.

W - total weight of airplane and contents, lbs.

r - rear spar location, fraction of chord.

s - wing loading, lbs/sq ft; subscript, "stall".

t - subscript "tail".

u - subscript "ultimate".

v - airplane speed, ft/sec.

w - unit pressure, lbs/sq ft; subscript "wing".

$\bar{w}$ - average unit pressure, lbs/sq ft.

x - distance measured parallel to MAC in terms of MAC; subscript*.

y - subscript, "yield".

α - (alpha) - angle of attack, radians or degrees.

β - (beta) - flight path angle, degrees.

Δ - (delta) - increment.

η - (eta) - propeller efficiency.

ρ - (rho) - mass density of air.

* With subscript "x", n refers to an applied load parallel to the basic wing reference chord. (See Fig.22).

C STANDARD VALUES AND FORMULAS

Air Density:

1. ρ_o = .002378 slugs (lbs/32.2)/cu ft (standard sea level value).

Dynamic Pressures:

2. $q = 1/2\ \rho_o V_i^2$

$= .00119\ v_i^2$ (where v_i is "indicated" speed, fps.)

$= .00256\ V_i^2$ (where V_i is "indicated" speed, mph.)

Basic Airplane Parameters:

3. $s = W/S$

4. $p = W/HP$

5. $d = W/S_D$

Aerodynamic Coefficients:

6. $C_R = (C_L^2 + C_D^2)^{1/2}$

7. $C_N = C_L \cos \alpha + C_D \sin \alpha$

8. $C_C = - C_L \sin \alpha + C_D \cos \alpha$ (positive rearward)

9. $C_{M_X} = C_N (x - CP)$ (Where x is the distance, from the leading edge, of the point on the chord about which the moment is computed, expressed as a fraction of the chord).

Forces, Unit Loadings, and Couples:

10. $F_x = C_x S\ q$ (Where x may be R, L, D, N, C, or M)

11. $F_D = S_D\ q$

12. $M = F_M C$ (torque or couple)

$= C_M S\ q\ C$

13. $\overline{w} = C_N q$

14. $n = F/W$

15. $F_{pr} = 375 \eta HP_a/V_a$ (propeller thrust, pounds)

Speeds:

16. $V_{L_a} = 52.7\ (\eta\ d/p_a)^{1/3}\ (\rho_o/\rho_a)^{1/3}$ (mph) = actual air speed at air density ρ_a.

17. $V_s = 19.76\ (s/C_L\ max)^{1/2}$ (mph) = indicated stalling speed.

18. $V_m = 19.76\ (d)^{1/2}$ (mph) = indicated theoretical maximum vertical speed.

(Note: The value of "d" should be the same as that used in, or determined from, Eq. 16.)

19. $V_i = V_a(\rho_a/\rho_o)^{1/2}$ where V_i = indicated air speed.
V_a = actual air speed.
ρ_o = standard density of air at sea level.
ρ_a = density of air in which V_a is attained.

20. $\Delta C_L = m\ (U/v)$ = change in C_L due to gust.

21. $\Delta n = \Delta C_L\ (q/s)$ = change in load factor due to gust.

.104 DESIGN WING AREA

1. In computing the design wing area the plan form of tapered or elliptical wings may be represented by a number of trapezoids closely approximating the actual plan form and having an equivalent area.

2. Trailing edge cut-outs may in general be neglected if they do not remove more than one-half the chord.

3. The application of CAR 04.104 to several typical cases is illustrated in Fig. 7.

.105 DESIGN POWER, P.

1. For airplanes of less than 2000 pounds standard weight the design power should not be less than the maximum except take-off rating of the engine installed.

2. In the case of airplanes having standard weights of 2000 pounds or more, there are no specific restrictions in regard to the choice of design power.

.110 INDICATED AIRSPEED, V.

1. For stress analysis purposes all airspeeds are expressed as "indicated" airspeeds. The "indicated" airspeed is defined as the speed which would be indicated by a perfect airspeed indicator, namely; one which would indicate true airspeed at sea level under standard atmosphere conditions.

.111 DESIGN LEVEL SPEED, V_L.

1. In the case of airplanes of less than 2000 pounds standard weight the high speed in level flight at design power should not exceed the value chosen for V_L. Performance calculations based on actual flight test data will be acceptable to substantiate the value of V_L selected if it is found to be impractical to conduct tests at design power.

2. For airplanes having standard weights of 2000 pounds or more, there are no specific restrictions in regard to the choice of design level speed.

.112 DESIGN GLIDING SPEED, V_g.

1. The equation given in CAR 04.211 for the minimum value of V_g provides for the following factors:

a. Probability of exceeding the high speed in level flight. (V_g can never be less than V_L).

b. Effect of cleanness and weight on the gliding speed which can be attained at a given gliding angle. Both these quantities are included in the term V_m. Propeller drag at terminal speed is not allowed for as the formula will not give values of V_g high enough to cause the propeller thrust to reverse in direction.

c. Influence of airplane size on the maximum speed likely to be used. The factor K_g is an empirical factor based on the weight of the airplane. Its purpose is to provide higher design gliding speeds for small, highly-maneuverable airplanes.

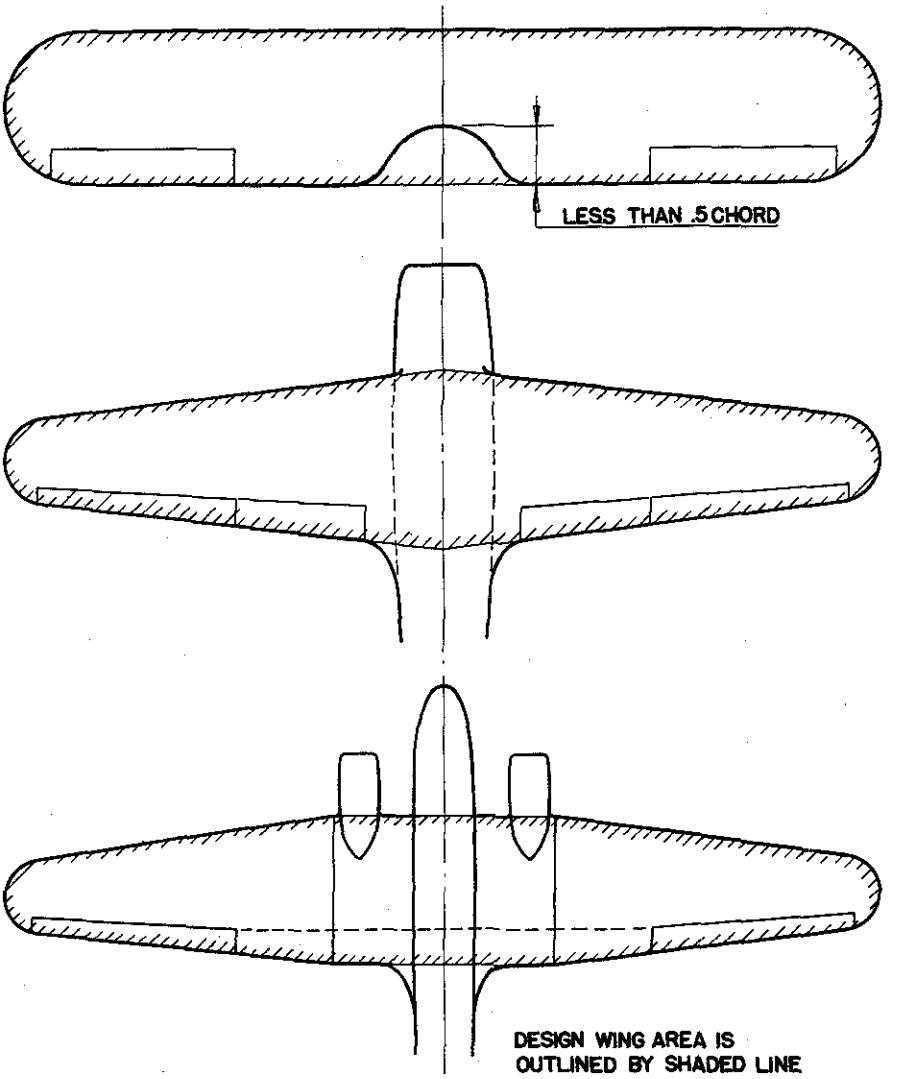

FIG. 7 TYPICAL DESIGN WING AREAS

.116 DESIGN MANEUVERING SPEED, V_p.

1. The equation given in CAR 04.211 for V_p is intended to provide for the following factors:

a. V_p cannot be less than the minimum speed of level flight.
b. Assuming that the size of the control surfaces is governed largely by the necessity for adequate control at the minimum speed, the formula tends to reduce the unit loading for the larger control surface areas required when the stalling speed is low.
c. The high speed of the airplane is included in the formula as a general measure of the magnitude of the maneuvering speed, so that the unit loading will be increased with an increase in high speed.
d. The factor K_p is an empirical factor to provide for the more severe maneuvers likely to be experienced by small airplanes. This factor is adjusted so as to make the control surface loadings for average airplanes agree approximately with those known to be satisfactory from past experience.

.129 AERODYNAMIC COEFFICIENTS.

A GENERAL.

1. The coefficients are absolute (non-dimensional) coefficients. When applied to an airfoil surface of given area they represent the ratio between an actual average unit pressure referred to the projected area of the airfoil and the dynamic pressure corresponding to the flight condition being considered. The subscripts denote the direction along which the force is measured, but do not change the basic reference area.

2. The subscripts "L" and "D" refer to directions normal to and parallel to the relative wind, while the subscripts "N" and "C" refer to directions respectively normal to and parallel to the basic wing chord. Subscript "R" refers to the direction of the resultant force. These factors are illustrated in Figs. 8 and 9. When the planes of the drag truss and lift trusses do not coincide respectively with the planes of the basic chord and the plane of the normal forces, a correction is necessary before the coefficients can be used directly in the wing analysis method outlined in CAM 04.31. The corrected coefficients are obtained by resolving the resultant force coefficients into components in the plane of the lift truss and drag truss, as shown in Fig. 10. The effect on the chord coefficient may be considerable, but the correction for C_N will usually be negligible.

3. The moment coefficient may be considered to be of the same nature as the force coefficients if the force to which it corresponds is applied as a couple at the leading and trailing edges of the wing chord, as shown in Figs. 8, 9 and 10. A positive moment coefficient requires an upward force at the leading edge, as shown. The conversion of center of pressure position into a moment coefficient about any given point can be easily accomplished by means of Eq. 9 in CAM 04. 1-C. It should be noted that the center of pressure and the moment coefficient are alternative in nature and can not both be used at the same time.

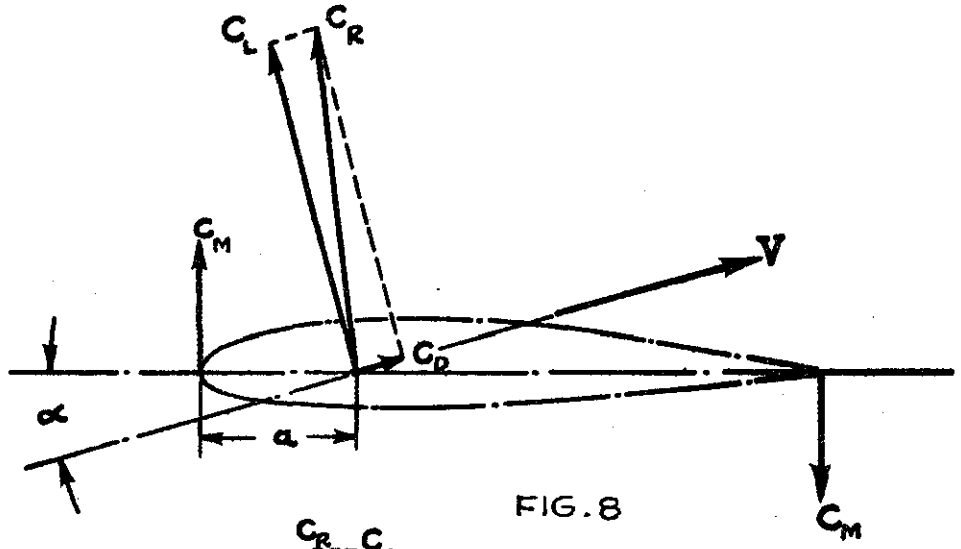

FIG. 8

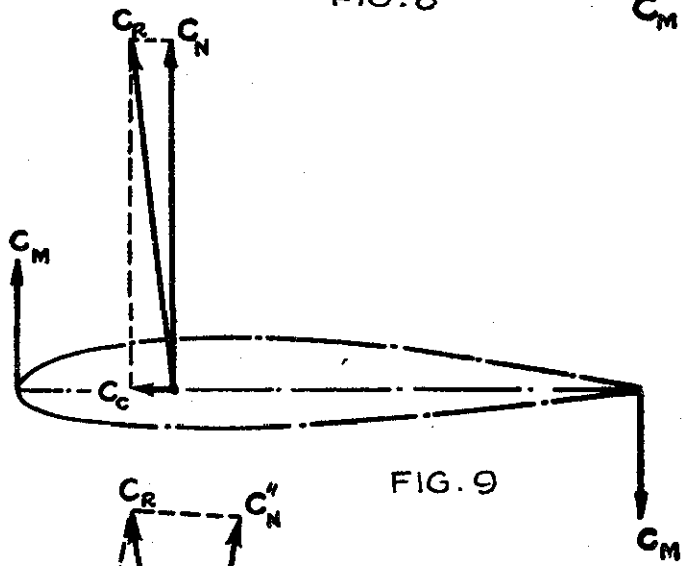

FIG. 9

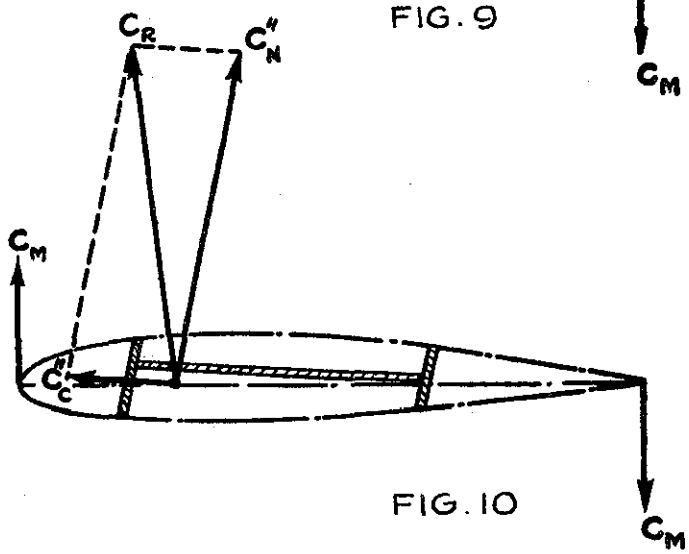

FIG. 10

REF. CAM 04.129-A2

FIGS. 8, 9, and 10- ILLUSTRATION OF AIRFOIL FORCE COEFFICIENTS

301230 O—41——4

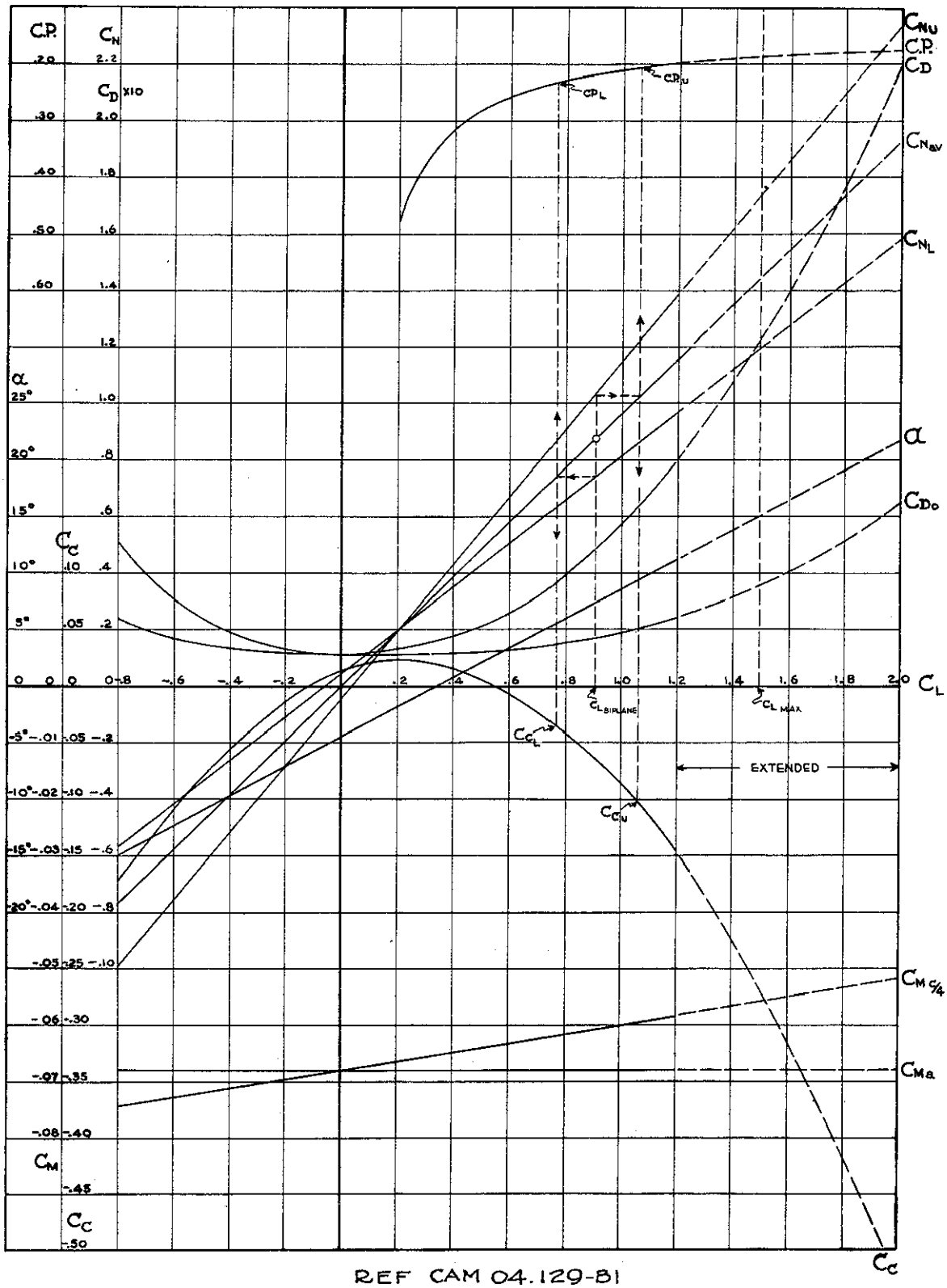

FIG. 11 CORRECTED AIRFOIL CHARACTERISTICS

B DETERMINATION OF CORRECTED AIRFOIL CHARACTERISTICS.

1. The standard airfoil characteristics for conventional airfoils are obtainable from NACA Reports and Technical Notes. The standard coefficients must usually be corrected and several additional coefficients should be plotted for use in the stress analysis. Simplified equations are outlined below for this purpose and Table I has been compiled to facilitate the numerical work. The results should be replotted in a convenient form such as that shown in Fig. 11, where C_L is used as the basic coefficient, instead of angle of attack.

2. Aspect Ratio Corrections. The methods of correcting for aspect ratio are well defined and are outlined in various text books and reports. The following equations may be used in this connection:

$$R = (kb)^2 / S$$

Where R = aspect ratio,
k = Munk's span factor for biplanes (for monoplanes k = 1.0),
b = span of longest wing, and
S = design wing area (See 6 CAR 04.104).

$$K = \frac{1}{R} - \frac{1}{R_6} = \frac{1}{R} - 0.1667$$

Where K = correction factor.

$$\alpha = \alpha_6 + 18.24\ KC_L \quad \text{(Items 2 to 4, Table I).}$$

Where α_6 = angle of attack (degrees) for a given C_L when aspect ratio is 6,

α = angle of attack (degrees) for same C_L when aspect ratio is R.

$$C_D = C_{D_6} + 0.318\ K\ C_L^2 \quad \text{(Items 5 to 7, Table I).}$$

Where C_{D_6} = C_D for given C_L when aspect ratio is 6.

C_D = " " " " " " " " R

$$m = m_6 \left[\frac{4}{3 + 6/R} \right]$$

Where m_6 = slope of lift curve when aspect ratio is 6.
m = " " " " " " " " R.

C COMPUTATION OF ADDITIONAL CHARACTERISTICS.

1. As indicated in Table I, certain additional characteristics are desirable and they may be determined as follows:

a. The normal force coefficient, C_N, can be determined from Eq. 7, CAM 04.1-C. The steps involved are shown as items 8 to 12 of

COMPUTATION OF AIRFOIL CHARACTERISTICS

1	C_L	-1.0	-.8	-.6	-.4	-.2	0	.2	.4	.6	.8	1.0	1.2	1.4	1.6	1.8	2.0	2.2
2	α_6																	
3	$\Delta\alpha = 18.24\ KC_L$																	
4	α = (2) + (3)																	
5	C_{D_6}																	
6	$\Delta C_{Di} = .318\ KC_L^2$																	
7	C_D = (5) + (6)																	
	$C_{D\,ext.}$ = (19) + (20)																	
8	COS α = COS (4)																	
9	SIN α = SIN (4)																	
10	C_L COS α = (1) X (8)																	
11	C_D SIN α = (7) X (9)																	
12	C_N = (10) + (11)																	
13	C_L SIN α = (1) X (9)																	
14	C_D COS α = (7) X (8)																	
15	C_C = (14) − (13)																	
16	C.P. = C.P.$_6$																	
	C.P. $_{ext.}$ = a − C_{Ma}/(12)																	
17	$C_{M\frac{1}{4}}$ = (.25 − (16)) X (12)																	
18	C_{Ma} = (17) + (a − .25) X (12)																	
19	C_{Di} = (6)/KR																	
20	C_{D_o} = (7) − (19)																	
21	ΔC_{Lu} (BIPLANE)																	
22	ΔC_{L_l} (BIPLANE)																	
23	C_{Lu} = (1) + (21)																	
24	C_{L_l} = (1) + (22)																	

R = K = 1/R − 1/6 = a = TABLE — I ΔC_{Lu} ΔC_{L_l} =

TABLE I COMPUTATION OF AIRFOIL CHARACTERISTICS

Table I. It will be found that C_N is almost identically equal to C_L for small values of the latter. This may not be true, however, for unconventional or modified airfoils, such as those equipped with flaps.

b. The chord coefficient, C_C, is determined from Eq. 8, CAM 04.1-C. The steps are outlined as items 13 to 15 of Table I.

c. The moment coefficient about the aerodynamic center, C_{M_a} is not given in some airfoil reports. In some cases the moment coefficient about the quarter chord point $C_{M_{C/4}}$ is plotted against C_L. In such cases a straight line can be drawn to fit the $C_{M_{C/4}}$ curve as closely as possible (See Fig. 11). The average value of C_{M_a} isthen obtained from the straight line where $C_L = 0$. The position of the aerodynamic center can then be obtained by the following equation:

$$a = .25 - (C_{M_1} - C_{M_a})$$

Where C_{M_1} is the value given by the straight line for $C_{M_{C/4}}$ where $C_N = 1.0$.

d. The values of a and C_{M_a} can also be obtained directly from CP curves as outlined in steps 16 and 17 of Table I, in which the values of $C_{M_{C/4}}$ are determined. These values can be plotted against C_L and the process for determining a and C_{M_a} can then be carried out as outlined above. In any case, the operations should be confined to the values of C_L which lie on the substantially straight portion of the lift coefficient curve.

e. The value of C_{M_a} can be separately determined for any given value of C_L by means of the equation:

$$C_{M_a} = C_{M_{C/4}} + (a - .25)\ C_N.$$

It may be advisable to plot these values for unconventional airfoils which do not have a well-defined aerodynamic center. Provision is made under Item 18 of Table I for determining local values of C_{M_a}.

D EXTENSION OF CHARACTERISTIC CURVES.

1. In the accelerated flight conditions it is possible to closely approach or exceed the maximum value of C_L shown on the basic airfoil characteristic curve without the breakdown of the flow characterized by the change in slope of the lift curve. The curve to be used for stress analysis purposes can be extended to represent the effect of a sudden change in angle of attack by the following approximations:

a. Referring to Fig. 11, extend the curve of angle of attack, α, to higher values of C_L by means of a straight line coinciding with the substantially straight portion of the original curve. The values of α so obtained should be entered in Table I under item 4. (The dotted lines in Fig. 11 indicates extended values).

b. Determine the induced drag coefficient as outlined in item 19 of Table I. R and K are defined in CAM 04.129-B.

c. Determine the profile drag coefficient C_{D_o}, item 20 of Table I. Plot these values for the original straight portion of the C_L curve and extend the curve so obtained along the same general path followed at the lower values of C_L, as shown in Fig. 11. Enter the values of C_{D_o} thus obtained under item 20.

d. Extend the C_D curve by determining the values for item 7 of Table I, as indicated.

e. The C_{M_a} curve can be extended as a horizontal straight line.
f. The extended values of C_N and C_C are determined as indicated under items 8 to 15 of Table I, using the extended values of C_D.
g. The CP values should be extended by means of the equation:

$$CP = a - C_{M_a}/C_N$$

using the extended values of C_N.

E BIPLANE EFFECTS.

1. The effects of biplane interference can be conveniently accounted for by a suitable modification of the corrected airfoil characteristic curves illustrated in Fig. 11. The modification of the various characteristics for each wing can be carried out as follows, referring to Table I:

a. Lift Coefficients. The individual life coefficients for each wing should be determined for the useful range of average lift coefficient, C_L, (Item 1 of Table I). Appendix III herein comprises the acceptable method and calls attention to the limitation in the application of NACA Report No. 501. This method derives increments which are added to and subtracted from the average lift coefficient. Items 21 and 24 are provided in Table I for this purpose.
b. Normal Force Coefficients. The corrected normal force coefficients for each biplane wing are plotted on Fig. 11. These values can be determined from the original curve of average normal force coefficient by using the corrected values of C_L under items 23 and 24, Table I.
c. General Characteristics. It is not necessary to plot the remaining characteristics for each biplane wing as they can be readily determined by the following method. Given a design value of the average C_N, the corresponding points on the C_N curves for each wing are determined. This individual value of biplane C_L corresponding to the biplane C_N are determined by horizontal lines intersecting the average C_N curve. The various coefficients for each wing are then determined for these values of C_L, as indicated by the vertical dotted lines on Fig. 11.

.131 PRIMARY STRUCTURE

1. This includes such items as control systems, fittings, auxiliary members used to support or strengthen other members carrying direct loads, covering of wings and control surfaces, etc., in addition to the main load carrying structure.

.2 STRUCTURAL LOADING CONDITIONS.

.201 DEFORMATIONS.

1. Detrimental permanent deformations are in general considered as those which correspond to stresses in excess of the yield stress. The yield stress is defined as the stress at which the permanent strain is 0.002 inches per inch.

2. In determining the permanent deformations the effects of slippage or jig deflection may be deducted if properly measured.

.2121 GUST LOAD FACTORS

1. The following formula for the load factor added in encountering a a gust should be used for wings:

$$\Delta n = \frac{KUVm}{575\ (W/S)}$$ where Δn = limit load factor increment.

K = gust factor, see CAM 04, Fig. 11a.
U = gust velocity, feet per second.
(Note that the "effective" sharp-edged gust equals KU).
V = indicated airspeed, miles per hour.
W/S = wing loading (CAR 04.106).
m = slope of lift curve, C_L per radian, corrected for aspect ratio.

.2131 CONDITION I (POSITIVE HIGH ANGLE OF ATTACK).

1. This condition is illustrated graphically in Fig. 12. It is primarily designed to represent conditions at which the highest positive acceleration or load factor is likely to be obtained and is based on either a gust or maneuvering condition. The maneuvering load factor increments given in CAR Fig. 04-3 are semi-empirical and are based largely on past experience. They represent the highest increments of acceleration which are to be expected during maneuvers.

2. As it is possible to develop the limit load factor for Condition I in various flight attitudes, a definite range of values of C_L is included, as indicated in Fig. 12. This corresponds to the assumption that the limit load factor will be developed at speeds somewhat below the V_L, the lowest speed being that associated with the value of C_{Lmax}. The modified flight conditions, which are explained in succeeding sections, are intended to provide for the effects of this assumption and are so specified as to require a minimum amount of investigation.

3. It will be noted that in Condition I a value for the CP is specified, instead of the moment coefficient. If it is desired to find the moment coefficient to be used in Condition I, the values of CP and C_{N_I} can be inserted in equation 9, CAM 04 1-C. In the case of a biplane, the proper correction should first be made to the upper wing CP.

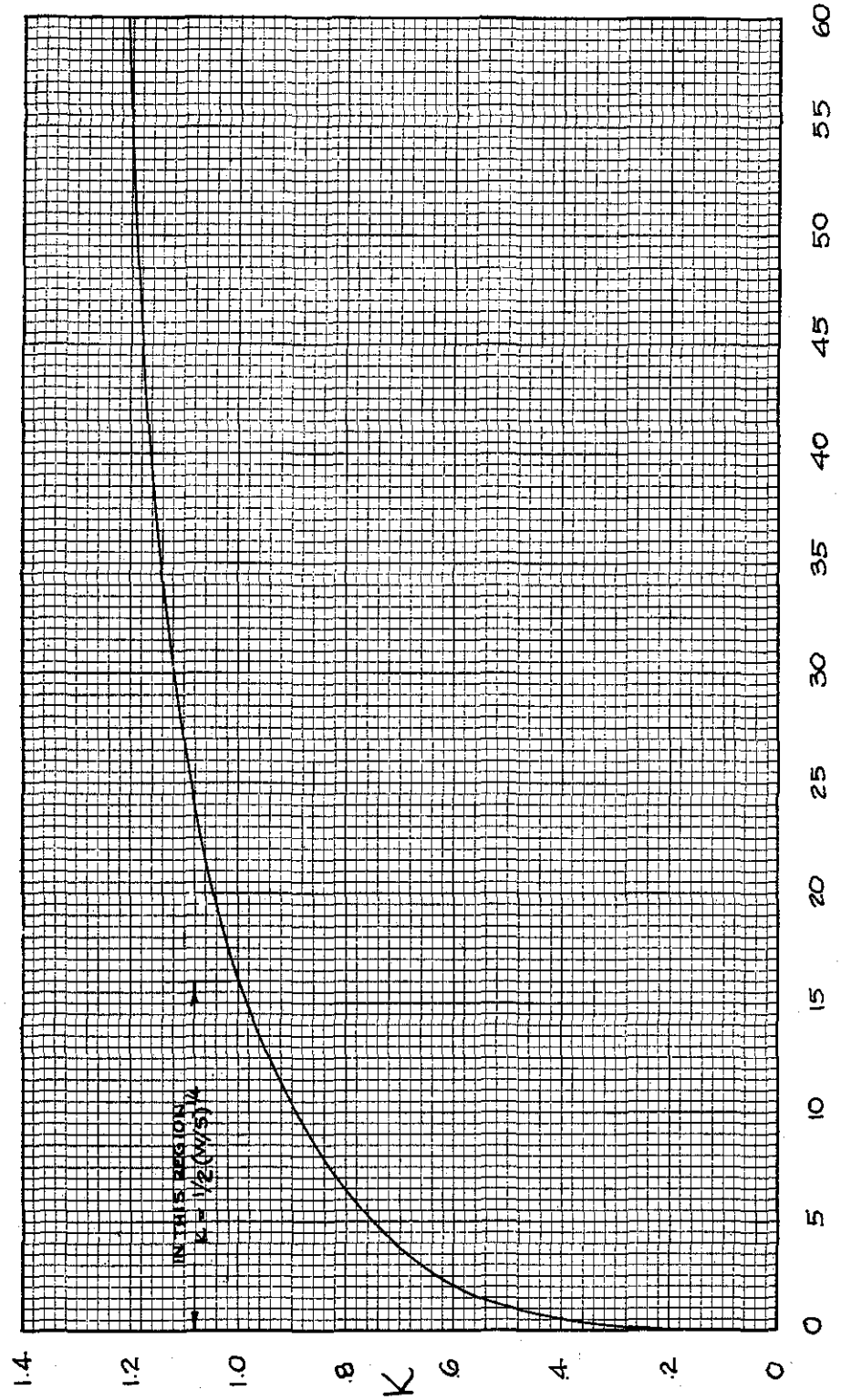

FIG. 11a.-VARIATION OF GUST FACTOR WITH WING LOADING.

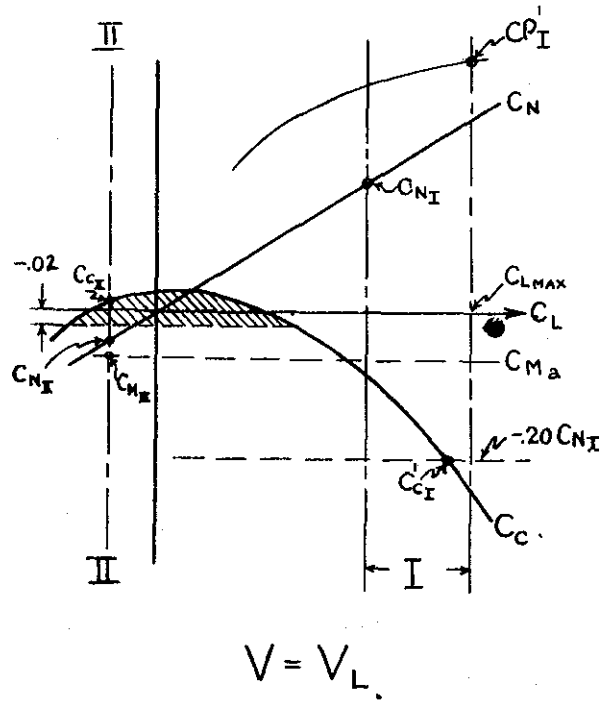

MAY BE NEGLECTED

Fig. 12 Conditions I & II

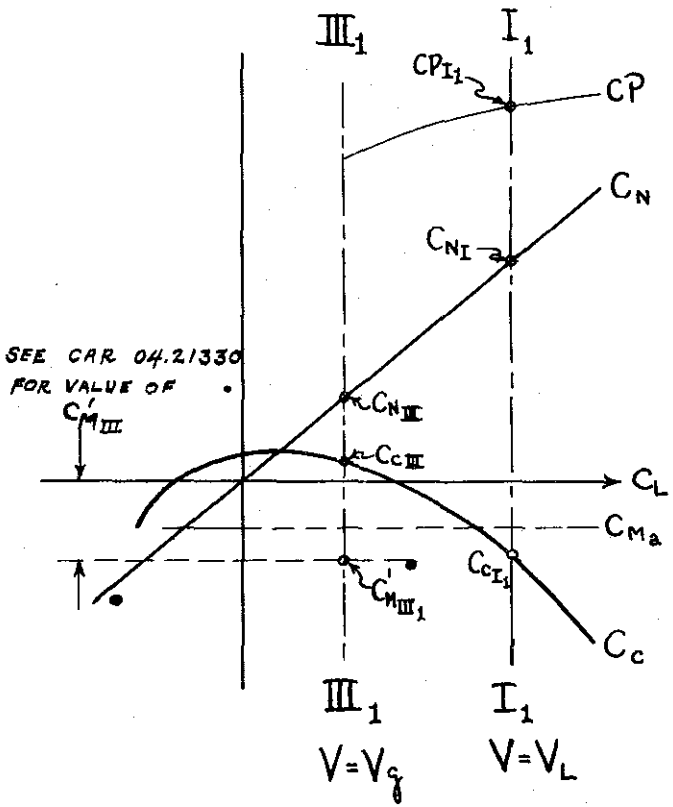

Fig. 13 Conditions I_1 & III_1

FIGS. 12 and 13

4. The arbitrary assumption of $C_C = -.20\ C_N$ is based on an average figure for C_C at C_{Lmax} and an adjustment of the design speed to give the applied load factor required. If the gust condition causes the value of C_L to exceed C_{Lmax}, the chord coefficient will usually be greater negatively than the arbitrary value specified.

.21310 CONDITION I_1 (POSITIVE HIGH ANGLE OF ATTACK MODIFIED)

1. In condition I, the value of C_N required to produce the specified limit load factor at the high speed of the airplane will usually be considerably less than that corresponding to C_{Lmax}. Condition I is designed to be critical for the front spar in bending and compression. For this reason arbitrary values of C_C and CP are assigned, which ordinarily represent a pull-up to the limit load factor at a speed lower than V_L. In certain cases, however, the actual accelerated condition at V_L may be critical for some portions of the structure, in which case it should be checked. The characteristics used for Condition I_1 are illustrated on Fig. 13. This condition applies in any event to the following cases:

a. Front Spar. When the tension flange or chord member of a front spar is designed for low margins of safety in Condition I, the smaller forward chord component which occurs in Condition I_1 may permit the net tension load to become greater than that computed for Condition I and thereby result in negative margins of safety.

b. Rear Spar and Rear Lift Truss. When a wing section having a small negative or a positive moment coefficient is employed, it is possible for the rear spar to receive its greatest beam loading when the limit load factor for Condition I is developed at the speed V_L.

.2132 CONDITION II (NEGATIVE HIGH ANGLE OF ATTACK).

1. This condition represents the effects of encountering a downward gust of 30 feet per second while flying at the speed V_L. The coefficients to be used are graphically illustrated on Fig. 12. The assumption of a zero chord coefficient in certain cases is not a requirement, but is permitted in order to simplify the analysis.

.2133 CONDITION III (POSITIVE LOW ANGLE OF ATTACK).

1. This condition represents an upward acceleration of the airplane at its design gliding speed V_g. The coefficients to be used are shown graphically on Fig. 14. As in Condition I, the applied load factor is considered to be produced by either a gust or a maneuver. As the speed V_g is the speed at which the airplane will be flown least, and not at all in very turbulent air, the gust load factor formula is based on a gust of 15 feet per second and the arbitrary value of the limit acceleration required is less than that for Condition I. This is further justified by the fact that for a conventional 2-spar wing, the value of the limit load factor affects the rear spar load much less than the values of speed and moment coefficient used and is therefore relatively unimportant. For other types of wings, the values of speed and moment coefficient are again usually the more important with respect to torsional loading, the maximum beam loading being obtained from Condition I.

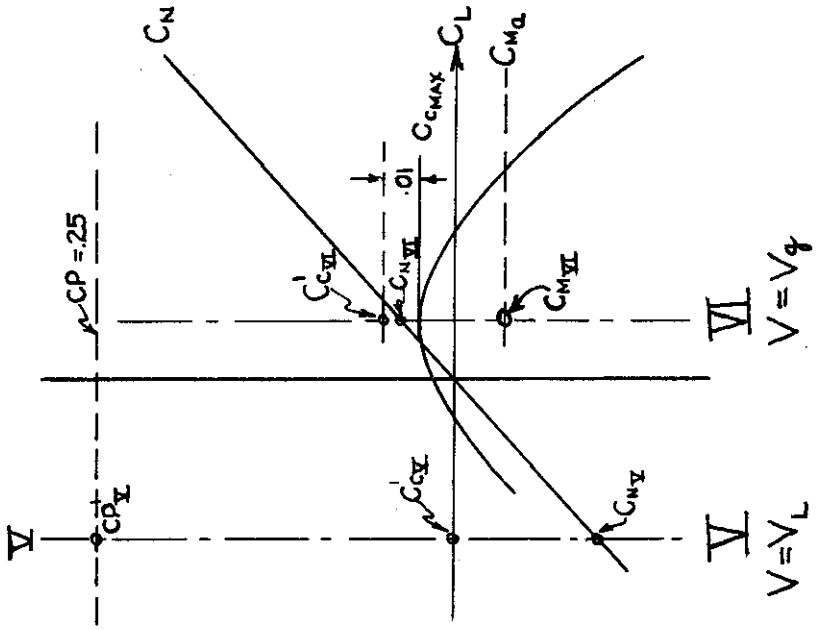

Fig. 15 Conditions V & VI

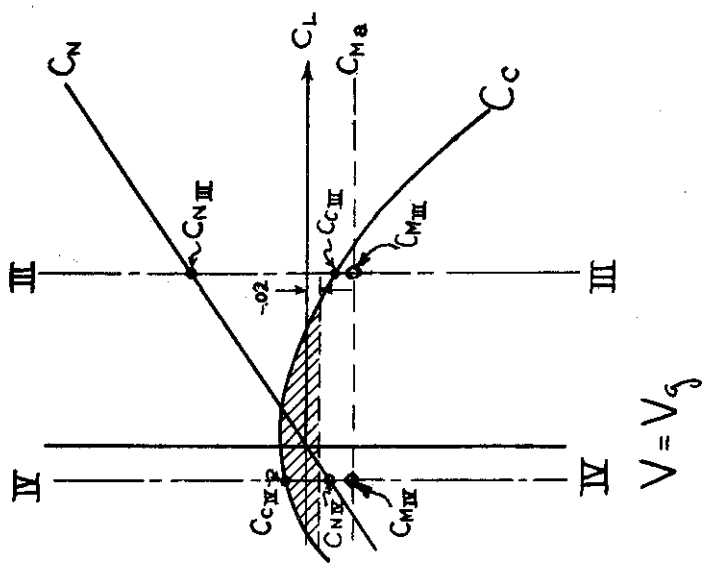

Fig. 14 Conditions III & IV

Figs. 14 and 15

.21330 CONDITION III_1 (POSITIVE LOW ANGLE OF ATTACK, MODIFIED).

1. This condition is included to provide for the use of ailerons during a pull-up or gust. It should be noted that a relatively small downward aileron deflection is sufficient to change the moment coefficient from a very small negative or from a positive value to the value specified. The effect of the displaced ailerons on high-moment airfoils is proportionately small and for that reason no corrections are required for such airfoils. In general the condition is critical only for the rear spar and the rear lift truss. This requirement is not applied to Condition IV, as the down load on the front spar is not as sensitive to changes in aileron position.

.2134 CONDITION IV (NEGATIVE LOW ANGLE OF ATTACK).

1. This condition, which is graphically illustrated on Fig. 14, represents the effects of encountering a "down" gust of 15 feet per second while flying at the design gliding speed, Vg.

.2135 CONDITION V (INVERTED FLIGHT).

1. An airfoil which has a negative moment coefficient always tends to produce an up load on the rear spar. It will usually be found, therefore, that none of the basic flying conditions produce any considerable down load on the rear spar (or any considerable "stalling" moment about the elastic axis of a wing). At large negative angles of attack, however, the moment coefficient about the aerodynamic center approaches zero and may even reverse in sign. This means that the CP approaches or lies behind the aerodynamic center. Condition V therefore represents such a condition, which is likely to be developed only in inverted flight. The applied load factors represent either a gust load factor, which may be produced while flying inverted, or a pull-up load factor based on the corresponding value for Condition I. For simplicity the value of C_C is assumed to be zero. See Fig. 15 for illustration of this condition.

2. It should be noted that the maximum rearward position of the CP for large negative angles of attack (above the negative stalling angle) approaches 40 per cent of the chord as a practical limit. For highly maneuverable airplanes, it would therefore be advisable to use this location of the CP in the inverted flight condition, in order to obtain adequate strength in the rear lift truss system.

3. In general, Condition V will not be critical for portions of the structure other than the rear spar, rear lift truss, and fuselage carry-through members. When a single-lift truss is used, a preliminary check should be made for this condition.

.2136 CONDITION VI (GLIDING).

1. This condition which is illustrated graphically in Fig. 15, is equivalent to the assumption that while flying at a speed V_g a small negative gust

changes the value of C_C to $C_{C_{max}}$. The increment of 0.01 is added to account for surface roughness and protuberances.

2. When this condition is applied to biplanes having a single lift truss it will usually be found that only the lower wing is critical with respect to rearward chord loads.

.2140 GENERAL.

1. For internally braced monoplane wings equipped with trailing edge flaps, no stress analysis of the wing structure as a whole need be submitted for the flaps conditions VII and VIII (CAR 04.2141 and 04.2142), provided that the average value of C_M' used in design conditions III and IV (CAR 04.2133 and 04.2134) equals or exceeds the quantity

$$C_{M_f} \times \left(\frac{V_f}{V_g}\right)^2$$

where: C_{M_f} is the average moment coefficient about the aerodynamic center (or at zero lift) for the airfoil section with flap completely extended. (The average moment coefficient refers to a weighted average over the span when C_M is variable. The wing area affected should be used in weighting).

V_f is the design speed with flaps extended, as specified in CAR 04.211.

V_g is the design speed used in conditions III and IV, as specified in CAR 04.211.

When the above condition is substantiated, no balancing computations for the extended flap conditions need be submitted and these conditions can also be eliminated from the design of the horizontal tail surfaces.

2. The foregoing interpretation applies to normal installations in which the flap is inboard of the ailerons, or in which a full span flap is used. For other arrangements it will be necessary to submit additional computations if it is desired to prove that flap conditions are not critical.

3. In all cases an investigation is required of the local wing structure to which the flap is attached, using the flap design loads as determined from CAR 04.2141 and 04.2142. The strength of special wing ribs used with split flaps, and the effect of flap control forces, should also be investigated. Reference should be made to current NACA reports and notes for acceptable flap data.

.2150 GENERAL

1. As an alternative procedure Conditions I_u, III_u, and V_u can be analyzed by modifying conditions I, III and V respectively so that 100 percent of the airload is assumed to act on one wing and 70 percent on the other, provided that the angular inertia of the wings is neglected. For airplanes over 10,000 pounds standard weight the latter factor may be increased linearly with standard weight up to 80 percent at 25,000 pounds. The effects of wing nacelles and landing gear may, however, be considered in computing the angular inertia.

2. When the procedure of paragraph 1 immediately above is followed, the approximate method of applying adjustments directly to the wing reactions may be used if desired. This method obviates the necessity for an additional determination of the beam load.

3. The use of more rational loading conditions than those specified in CAR 04.215 or in paragraph 1 above will be permitted if they are shown to be applicable. Such loading conditions should be based on studies giving consideration to unsymmetrical entries into gusts, to gusts affecting one wing only, and to maneuvering with ailerons.

4. The unsymmetrical flying conditions apply particularly to cabane bracing, which should be considered as part of the lift truss.

.2160 GUST AT REDUCED WEIGHT.

1. It should be noted that a decrease in airplane gross weight will increase the gust load factor. This may cause critical loads to be developed in parts of the structure supporting dead weight. This should be thoroughly investigated in the case of airplanes having a widely variable loading. In other cases it can usually be demonstrated that the gust at reduced weight condition is critical only for the forward portion of the fuselage, the engine mount, and the attachments of items of dead weight.

2. When engine nacelles or other large items of dead weight are attached to the wing structure, they should be checked for the load factor due to the combined linear and angular accelerations resulting from the loadings of Condition I_u (CAR 04.2151) determined at the minimum design weight.

.2164 WING TANKS EMPTY.

1. The specified weight reduction has particular application to cases in which the maximum authorized weight is based on full pay load and a fuel load of .15 gallons (.9 pounds) per certified maximum (except take-off horsepower) in accordance with CAR 04.740. In all other cases the reduction in weight may equal the weight of fuel that can be carried simultaneously with full pay load.

.217 WING LOAD DISTRIBUTION.

A SPAN DISTRIBUTION.

1. The span distribution of normal force coefficient (C_N) in the case of wings having less taper than that corresponding to a mean taper ratio of 0.5 and not having aerodynamic twist should be assumed to vary in accordance with Figs. 16 and 17, which are assumed to represent two extreme cases of tip loading. Each case should be investigated unless it is demonstrated that only one is critical. The mean taper ratio is defined as the ratio of the tip chord (obtained by extending the leading and trailing edges to the extreme wing tip) to the root chord (obtained by extending the leading and trailing edges to the plane of symmetry).

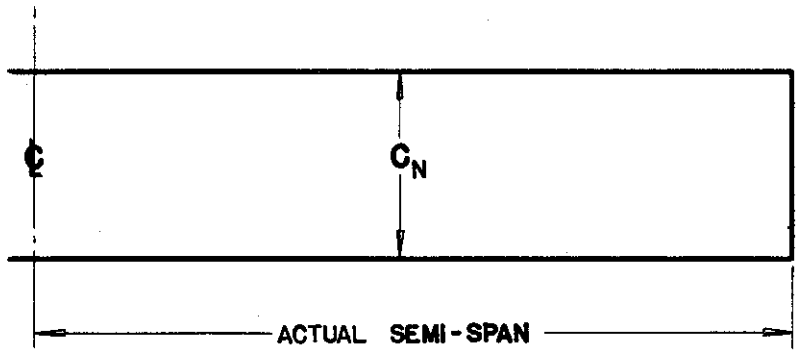

FIG. 16 SPAN DISTRIBUTION – NO TIP LOSS

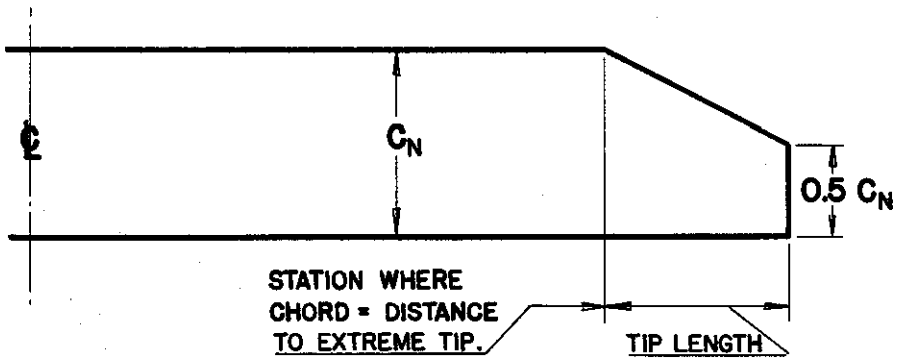

FIG. 17 SPAN DISTRIBUTION – WITH TIP LOSS

REF. CAM 04.217-A

NOTE : ABOVE FIGURES APPLY ONLY TO WINGS WITHOUT AERODYNAMIC TWIST BUT HAVING MEAN TAPER RATIOS GREATER THAN 0.5

FIGS. 16 & 17. SPAN DISTRIBUTION OF C_N FOR WINGS.

2. In all other cases, the span distribution should be determined by rational methods unless it is shown that a more severe distribution has been used. Acceptable methods of determining rational span distributions are given in the Army-Navy-Commerce publication ANC-1 (1), "Spanwise Air Load Distribution" (obtainable from the Superintendent of Documents, Washington, D. C., at the nominal sum of 60 cents), in NACA Technical Report No. 585, and in NACA Technical Note No. 606.

3. The effects of nacelles on the normal force coefficient may, in general, be neglected. Their effects on chord loads are outlined in CAM 04. 217-C.

4. The effect of trailing edge cut-outs which remove less than 50 per cent of the chord may be neglected when Figs. 16 and 17 are used.

5. When the normal force coefficient is assumed to vary over the span, the values used should be so adjusted as to give the same total normal force as the design value of C_N acting uniformly over the span. (See CAM 04.217-D for additional information).

6. When Figs. 16 and 17 are used the chord coefficient should be assumed to be constant along the span, that is, it should be assumed that tip loss does not affect the chord coefficient.

B CHORD DISTRIBUTION.

1. The approximate method of chord loadings outlined in CAM 04.313 for the testing of wing ribs is suitable for conventional two spar construction if the rib forms a complete truss between the leading and trailing edges. An investigation of the actual chord loading should be made in the case of stressed-skin wings if the longitudinal stiffeners are used to support direct air loads. In some cases it is necessary to determine the actual distribution, not only for total load but for each surface of the wing. If wind tunnel data are not available, the methods outlined in NACA Reports Nos. 383, 411 and 465 are suitable for this purpose. These methods consist in determining the "basic" pressure distribution curve at the "ideal" angle of attack and the "additional" pressure distribution curve for the additional angle of attack. These curves can be coordinated with certain values of C_L, so that the final pressure distribution curve can be obtained immediately for any C_L. Curves of this nature for several widely-used airfoils can be obtained directly from the NACA.

2. Leading Edge Loads. On high speed airplanes the leading edge loads developed may be exceptionally severe, particularly the "down" loads which are produced by negative gusts when flying at the design gliding speed. The magnitude of such loads can be estimated, without determining the entire chord distribution, by the method outlined in NACA Report No. 413.

3. Effects of Auxiliary Devices. When a design speed higher than required is used in connection with wing flaps or other auxiliary high-lift devices, it will be necessary to determine the chord distribution over the entire airfoil. The effect of any device which remains operative up to V_g should be carefully investigated. This applies particularly to auxiliary airfoils and fixed slots.

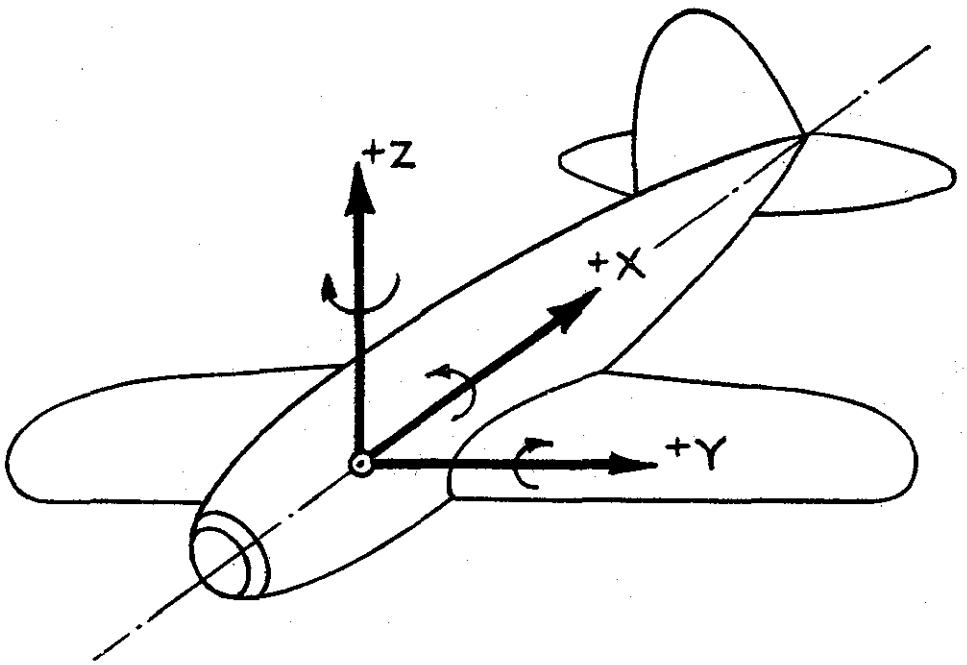

FIG. 18 - CONVENTION OF AXES, FORCES AND MOMENTS.
(REF. CAM 07.217-D3)

NOTE: THERE ARE NO FIGURES 19 & 20 IN THIS EDITION, AS THEY WERE DELETED BY A REVISION TO THE PRECEEDING EDITION.

301230 O—41——5

C SPECIAL LOADINGS.

1. Parasite Drag. The drag of large items attached to the wing cellule (such as nacelles) should be estimated and considered in conjunction with the conditions in which the addition of such a drag load may result in a critical load in any member(s).

2. Propeller Thrust. The propeller thrust from a nacelle may be neglected in the detailed analysis of the wing structure, with the following exceptions:

a. When the nacelle location is such as to produce large local loads on the wing structure (nacelle above wing, etc.)
b. When, in multi-engined airplanes, nacelles are located at a considerable distance from the plane of symmetry, in which case the wing attachment structure should be analyzed for the case of full power applied on one side only.

D DETERMINATION OF POINT OF APPLICATION OF THE RESULTANT AIR LOADS ON A WING.

1. A general method is outlined in Army-Navy-Civil Publication ANC-1(3)*, "Determination of the Points of Application of the Resultant Airloads on a Wing", for determining the mean effective value of the normal force coefficient, the average moment coefficient, location of the mean aerodynamic center and value of the mean aerodynamic chord. These factors are needed in order to determine the balancing loads for various flight conditions.

2. A simplified version of the method presented in ANC-1(3) is presented by Table II and is applicable to those cases where the span distribution outlined in CAM 04.217-A1 is employed. In order that the procedure may be entirely clear, the following instructions are presented:

a. In general, the summation of all forces acting upon a wing can be expressed as a single resultant force acting at a certain point and a couple, or moment of air forces, about this point. If the point is so chosen that, at constant dynamic pressure, the moment of the air forces does not appreciably change with a change in the angle of attack of the airfoil, the point can be considered as the mean aerodynamic center of the wing. The resultant force can be resolved into the normal and chord components and represented by the average coefficients C_N and C_C, while the moment may be represented by the average moment coefficient, C_M, multiplied by a distance which can be considered to be the mean aerodynamic chord. The values of the above quantities and the location of the mean aerodynamic center will depend on the plan form of the wing and the type of span distribution curve used.

*To be published soon.

b. The choice of a reference axis system is an arbitrary matter; any rectangular system of coordinates will be satisfactory. However, for the present case, it has been found convenient to choose a set of rectangular axes fixed in the airplane. The longitudinal or X-axis may be taken parallel to the line of thrust, parallel to the wing chord, perpendicular to the projection of the plane of the wing beams on the plane of symmetry, or any similar line in the plane of symmetry. The normal or Z-axis lies in the plane of symmetry perpendicular to the X-axis. The lateral or Y-axis is perpendicular to the plane of symmetry. The origin may be taken at any point in the plane of symmetry, preferably not too far from the wing. The resultant single force can then be expressed by its components in the XZ plane and the moment as a couple about the Y-axis. Forces which act up, aft, and toward the left wing tip are considered positive. Positive moments act counter clockwise about their respective axes when viewed from the origin.

c. An explanation and clarification of the procedure to be followed in filling out Table II is as follows:

(1) The semi-wing should be divided into a convenient number of strips with a number or letter assigned to each and listed in column 1.
(2) The distance from the plane of symmetry to the centroid of the area of each strip is listed in column 2.
(3) Column 3 contains the width of the strip.
(4) The mean chord of each strip is listed in column 4.
(5) The area of each strip is found in column 5 by multiplying column 3 by column 4. The sum of this column should equal half the wing area as indicated below the table. This is a check on the correctness of the strip areas and nothing more should be done until good agreement is obtained.

(6) The data for column 6 is taken from the assumed span distribution curve, Figure 16 or 17. The factor R_b represents the ratio of the actual C_N at any point to the value of C_{N_o} at the root of the wing.

(7) Column 7 contains the product of column 5 and 6. The sum of this column when divided by the sum of column 5 will give the value K_b, which is the ratio of the mean effective C_N to the value of C_{N_o} (at the root).

(8) Column 8 contains the product of columns 2 and 7. The sum of this column when divided by the sum of column 7 gives the lateral coordinate of the centroid of the semi-wing as indicated below the table.

(9) In column 9 is listed the distance of each section aerodynamic center aft of the YZ plane.

(10) Column 10 contains the product of column 7 and 9. The sum of this column when divided by the sum of column 7 gives the X-coordinate of the centroid as indicated below the table.

(11) In column 11 is listed the distance of each section aerodynamic center above the XY plane.

(12) Column 12 contains the product of columns 7 and 11. The sum of this column when divided by the sum of column 7 gives the Z-coordinate of the centroid as indicated below the table.

(13) Column 13 contains the product of columns 4 and 5. The sum of this column, when divided by the sum of column 5, gives the length of the mean aerodynamic chord. If a location is wanted for the mean aerodynamic chord, it should be drawn on the wing so that its aerodynamic center coincides with the centroid of lift determined by means of the preceding columns.

(14) Column 14 is a list of the section moment coefficients.

(15) Column 15 contains the product of columns 13 and 14. For wings that have no twist, the sum of this column when divided by column 13 gives the average moment coefficient for the wing.

3. In the case of twisted wings a different span distribution exists for each angle of attack. The location of the resultant forces can, however, be determined as in 2 above for any known span distribution.

Table II

Determination of Point of Application of Resultant Airloads on a Wing
(Ref. CAM 04-217-D)

1	2	3	4	5	6	7	8	9	10	11	12	13	14	15
Strip No.	y	Δy	C	$C\Delta y$	R_b	$R_b C\Delta y$	$yR_b C\Delta y$	x_{ac}	$x_{ac}R_b C\Delta y$	Z_{ac}	$Z_{ac}R_b C\Delta y$	$C^2\Delta y$	$C_{M_{ac}}$	$C_{M_{ac}}C^2\Delta y$
Ref.				(3)x(4)		(6)x(5)	(2)x(7)		(9)x(7)		(11)x(7)	(4)x(5)		(14)x(13)
Σ														

$$\bar{y} = \frac{\Sigma(8)}{(7)} =$$

$$\bar{x} = \frac{\Sigma(10)}{\Sigma(7)} =$$

$$\bar{z} = \frac{\Sigma(12)}{\Sigma(7)} =$$

$$\bar{c} = \frac{\Sigma(13)}{\Sigma(5)} =$$

$$C_M = \frac{\Sigma(15)}{\Sigma(13)} =$$

$$K_b = \frac{\Sigma(7)}{\Sigma(5)} =$$

Check: →

$$\text{Wing Area} = \frac{2}{144}\Sigma(5) =$$

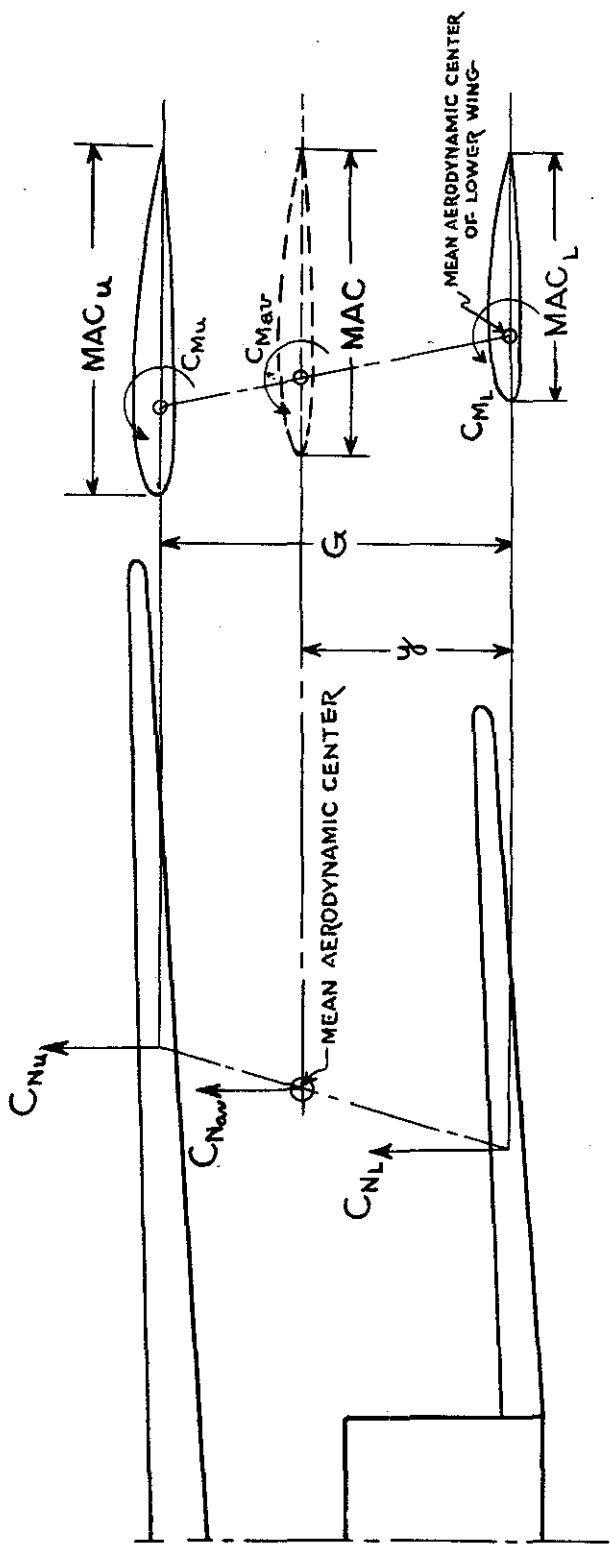

(a) $$y = \left(\frac{C_{N_u} S_u}{C_{N_u} S_u + C_{N_L} S_L}\right) G$$

(b) $$MAC = \frac{(MAC)_u S_u + (MAC)_L S_L}{S_u + S_L}$$

(c) $$C_{M_{aw}} = \frac{C_{M_u} S_u (MAC)_u + C_{M_L} S_L (MAC)_L}{S_u (MAC)_u + S_L (MAC)_L}$$

FIG 21 – RESULTANT FORCES ON A BIPLANE

(Ref. CAM 04.217-E)

E RESULTANT FORCES ON BIPLANES.

1. The mean aerodynamic center location and the value of the mean aerodynamic chord for each wing panel can be found as outlined in CAM 04.217-D. When wing flaps or other auxiliary high lift devices are used the mean effective moment coefficient for each wing panel should also be obtained. For a given flight condition, the values of C_N for each wing can be determined from Table II. The location of the mean aerodynamic center of the biplane and the determination of the resultant forces and moments can be accomplished as follows, referring to Fig. 21:

a. The mean aerodynamic center of the biplane cellule lies on a straight line connecting the mean aerodynamic centers of the two wing panels. The location on the line is determined from equation (a), Fig. 21.
b. Assuming that the mean effective moment coefficient is the same for each wing panel, the value of the mean aerodynamic chord for the biplane is determined from equation (b), Fig. 21.
c. If the mean effective moment coefficients for the two wing panels are different in value, the effective moment coefficient for the biplane can be determined from equation (c), Fig. 21.

2. The mean aerodynamic center of a biplane, as determined above, is based on the relative values of the normal forces acting on each wing. When the average normal force coefficient for the entire biplane is near zero, the relative loading on the wings varies over a wide range and the mean aerodynamic center, if determined as outlined above, would in some cases lie entirely outside of the wing cellule. For the same conditions, however, the chord force coefficients for the wings would be nearly equal, so that the resultant chord force would not act at the same point as the resultant normal force. As the location of the mean aerodynamic center is of interest mainly in balancing and stability computations, the following approximations and assumptions are permissible:

a. A single location may be assumed for the mean aerodynamic center for all the balancing conditions.
b. When the investigation of two different span distributions is required, the more nearly constant span distribution may be used in determining the mean aerodynamic center and MAC.
c. The computations may be made for an average value of $C_N = 0.5$, unless the biplane has an unusual amount of stagger or decalage, or is otherwise unconventional.
d. When the use of a single location for the aerodynamic center is not sufficiently accurate, the computation of the mean aerodynamic center for the entire biplane should be omitted and in balancing the airplane each wing should be treated as a separate unit.

.218* BALANCING LOADS.

A GENERAL.

* It will be noted that there is no .218 section in CAR 04. The subject of balancing loads has, however, been assigned this number in order to provide better continuity within the Manual.

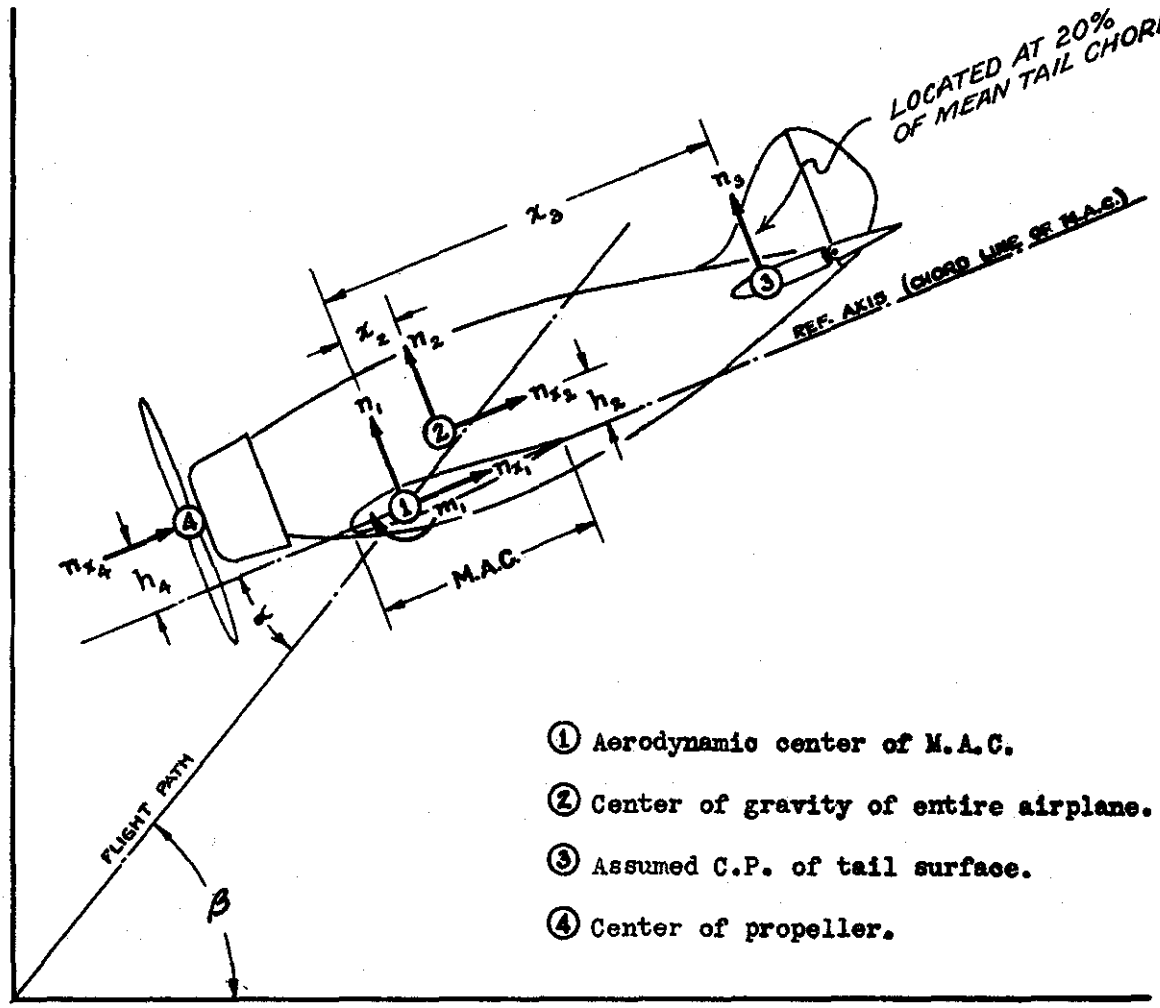

α = angle of attack, degrees (shown positive).

β = gliding angle, degrees.

n = force/W (positive upward and rearward).

m = moment/W (positive clockwise as shown).

x = horizontal distance from ① (positive rearward).

h = vertical distance from ① (positive upward).

All distances are expressed in terms of the M.A.C.

FIG. 22 BASIC FORCES IN FLIGHT CONDITIONS

(Ref. CAM 04.218-B)

1. The basic design conditions must be converted into conditions representing the external loads applied to the airplane before a complete stress analysis can be made. This process if commonly referred to as "balancing" the airplane and the final condition is referred to as a condition of "equilibrium". Actually, the airplane is in equilibrium only in steady unaccelerated flight; in accelerated conditions both linear and angular accelerations act to change the velocity and attitude of the airplane. It is customary to represent a dynamic condition, for stress analysis purposes, as a static condition by the expedient of assigning to each item of mass the increased force with which it resists acceleration. Thus if the total load acting on the airplane in a certain direction is "n" times the total weight of the airplane, each item of mass in the airplane is assumed to act on the airplane structure in exactly opposite direction and with a force equal to "n" times its weight.

2. If the net resultant moment of the air forces acting on the airplane is not zero with respect to the center of gravity, an angular acceleration results. An exact analysis would require the computation of this angular acceleration and its application to each item of mass in the airplane. In general, such an analysis is not necessary except in certain unsymmetrical flight conditions. The usual expedient in the case of the symmetrical flight conditions is to eliminate the effects of the unbalanced couple by applying a balancing load near the tail of the airplane in such a way that the moment of the total force about the center of gravity is reduced to zero. This method is particularly convenient, as the balancing tail load can then be thought of either as an aerodynamic force from the tail surfaces or as a part of a couple approximately representing the angular inertia forces of the masses of and in the airplane. Considering a gust condition, it is probable that angular inertia forces initially resist most of the unbalanced couple added by the gust, while in a more or less steady pull-up condition the balancing tail load may consist entirely of a balancing air load from the tail surfaces.

B BALANCING THE AIRPLANE.

1. The following considerations are involved in balancing the airplane:

   a. Full "power on" is assumed for conditions at V_L (Conditions I and II), but for conditions at V_g (Conditions III and IV) the propeller thrust is assumed to be zero.
   b. It is assumed that the limit load factors specified for the basic flight conditions are wing load factors. A solution is therefore made for the net load factor acting on the whole airplane. The value so determined can then be used in connection with each item of weight (or with each group of items) in analyzing the fuselage. For balancing purposes the net factor is assumed to act at the center of gravity of the airplane.
   c. Assuming that it is possible for a load to be acting in the opposite direction on the elevator, it is recommended that the center of pressure of the horizontal tail be placed at 20 per cent of the mean chord of the entire tail surface. This arbitrary location may also be considered as the point of application of inertia forces resulting from angular acceleration, thus simplifying the balancing process.
   d. In Fig. 22 the external forces are assumed to be acting at four points only. The assumption can generally be made that the fuselage drag acts at the center of gravity. When more accurate data are available,

TABLE III

BALANCING COMPUTATIONS

(See Fig. 22 for symbols)
(Ref. CAM 04.218-B3)

See CAM 04.218-B1 through B5

No.	Item	V_L = mph I	V_L = mph II	V_g = mph III	V_g = mph IV
(1)	W = gross weight, pounds				
(2)	$q = .00256 V^2$				
(3)	s = (1) /S				
(4)	q/s = (2) / (3)				
(5)	n_1 = applied wing load factor				
(6)	C_N = (5) / (4)				
(7)	C_L corresponding to C_N				
(8)	C_C				
(9)	n_{x_1} = (8) x (4)				
(10)	$n_{x_4} = F_{pr}/(1)$				
(11)	C_m = design moment coefficient				
(12)	m_1 = (11) x (4)				
(13)	n_3 = tail load factor				
(14)	n_2 = -(5) - (13) = net load factor				
(15)	n_{x_2} = - (9) - (10) = chord load factor				
(16)	T = (1) x (13) = tail load				

See CAM 04.218-B6

(17)	C_{mt} = moment coefficient of airplane less tail				
(18)	ΔC_m = (17) - (11)				
(19)	Δm_1 = (18) x (4)				
(20)	Δn_3 = (19) / $(x_3 - x_2)$				
(21)	ΔT = (1) x (20)				
(22)	T' = (16) + (21)				

the resultant fuselage drag force can of course be computed and applied at the proper point. In cases where large independent items having considerable drag (such as nacelles) are present, it is advisable to extend the set-up shown in Fig. 22 to include the additional

2. As shown in Fig. 22, a convenient reference axis is the basic chord line of the mean aerodynamic wing chord. (The basic chord line is usually specified along with the dimensions of the airfoil section.) The determination of the size and location of the MAC is outlined in CAM 04.217-D. In determing the vertical location of the aerodynamic center of the MAC (point 1 of Fig. 22) the vertical position of the MAC in relation to the wing root chord, or other similar reference line, should be considered.

3. A tabular form will simplify the computations required to obtain the balancing loads for various flight conditions. A typical form for this purpose is shown in Table III. In using Fig. 22 and Table III the following assumptions and conventions should be employed:

a. If known distances or forces are opposite in direction from those shown in Fig. 22, a negative sign should be prefixed before inserting in the computations. For instance, in the case of a high-wing monoplane, h_2 will have a negative sign. Likewise n_{x_4} will be either negative or zero in all cases. The direction of unknown forces will be indicated by the sign of the value obtained from the equations. A negative value of n_3 will usually be determined from the balancing process, indicating a down load on the tail. For conditions of positive acceleration the solution should give a negative value for n_2, as the inertia load will be acting downward. The convention for m_1 corresponds to that used for moment coefficients; that is, when the value of C_M is negative m_1 should also be negative, indicating a diving moment.

b. All distances should be divided by the MAC before being used in the computations.

c. The propeller thrust should be assumed to act along the thrust axis.

d. The chord load acting at the tail surfaces may be neglected.

4. Computation of Balancing Loads. In Table III the computation of balancing loads is indicated for typical flight conditions. The equations are based on the fact that the use of the average force coefficients in connection with the design wing area, mean aerodynamic chord, and mean aerodynamic center will give resultant forces and moments of the proper magnitude, direction and location. Provision is made in the table for obtaining the balancing loads for different gross weights. The table may be expanded to include computations for several loading conditions, special flight conditions, or conditions involving the use of auxiliary devices. It should be noted that a change in the location of the CG will require a corresponding change in the values of x_2 and h_2 on Fig. 22.

a. When the full-load center of gravity position is variable the airplane should be balanced for both extreme positions unless it is apparent that only one is critical. In certain cases it may also be necessary to check the balancing tail loads required for the loading conditions which produce the most forward and most rearward center of gravity positions for which approval is desired.

5. The following explanatory notes refer by number to items appearing in Table III;

(3) The wing loading, s, should be based on the design wing area.

(5) n_1 = limit load factor required for the condition being investigated. (See CAR 04.21).

(8) Determine C_C as specified in CAR 04.21. See also eq. 8, CAM 04.1-C.

(10) Propeller thrust, F_{pr}, should be determined from Eq. 15, CAM 04. 1-C for conditions at V_L. For conditions at V_g assume $n_{x_4} = 0$.

(11) The value of C_m' is specified in CAR 04.21. For a biplane see CAM 04.217-E of this bulletin. See also CAM 04.217-D in cases involving wing flaps.

(13) The net tail load factor, n_3, is found by a summation of moments about point (2) of Fig. 22, from which the following equation is obtained:

$$n_3 = \frac{1}{(x_3 - x_2)} \left[m_1 - n_{x_1} h_2 + n_1 x_2 + n_{x_4} (h_4 - h_2) \right]$$

Note: The above explanatory notes apply only when the set-up shown in Fig. 22 is used. If a different distribution of external loads or a different system of measuring distances is employed, the computations should be correspondingly modified.

6. The preceding paragraphs 1-5 and items 1-16 in Table III cover the determination of the balancing loads, without consideration for the moment which may be contributed by the fuselage and nacelles. The following explanatory notes refer by number to items appearing in Table III which provide for the determination of tail loads with consideration for fuselage moment effects, as required by CAR 04.2210.

(17) C_{mt} is the total moment coefficient about the c.g. of the airplane less tail, as determined from a wind tunnel test. When such test results are not available this item can be omitted, as other provisions to cover cases of this type are given in item (18) following. It will be noted that this coefficient is based on the design wing area and the mean aerodynamic chord.

(18) ΔC_m is the increment in moment coefficient due to the fuselage and nacelle moments, also based on design wing area and mean aerodynamic chord. When data on item (17) is not available, ΔC_m can be assumed equal to -0.01.

(22) T' is the tail load considering fuselage and nacelle moment effects.

.22 CONTROL SURFACE LOADS.

.220 GENERAL.

1. The requirements for the design of control surfaces as outlined in CAR 04.22 are based on the two separate functions of control surfaces: balancing and maneuvering. The requirements are specified so as to account also for the effects of auxiliary control devices, gust loads, and control forces.

2. The average unit loading normal to any surface is determined by the force coefficient C_N and the dynamic pressure q, as shown by Eq. 13, CAM 04. 1-C. When dealing with tail surfaces, it is customary to specify the value of C_N for the entire surface, including both the fixed and movable surfaces. The total load so obtained is then distributed so as to simulate the conditions which exist in flight. In the case of ailerons, flaps or tabs, the value of C_N is usually determined only for the particular surface, without reference to the surface to which it is attached.

3. The average unit loading is usually assumed to be constant over the span. On account of the nature of the chord distribution curves specified in CAR Figs. 04-4, 04-5 and 04-6, it will be simpler to assume that the unit loading at the hinge line is constant over the span

4. Although there are no specific chord loading conditions for control surfaces specified in CAR 04.22, such surfaces should be designed to withstand a reasonable amount of chord load in either direction. A total chord load equal to 20 percent of the maximum normal load may be used as a separate design condition. The distribution along the span may be made proportional to the chord, if desired. Tests for this condition are not required unless the structure is such as to indicate the advisability of such tests.

.2210 BALANCING (HORIZONTAL SURFACES).

1. The balancing loads should be applied to the horizontal tail surfaces, as the ailerons and the vertical tail surfaces are used only to a small extent for balancing purposes. The use of the vertical tail surfaces for balancing a multi-engined airplane having one engine dead is provided for in CAR 04.2220.

2. An acceptable method for accounting for fuselage and nacelle moments in the determination of the balancing tail loads is given in CAM 04.218-B6 and CAM 04 Table III. When wind tunnel tests have been used in this process the tail loads T' in item 22 of this table may be used for design purposes. When, however, the -0.01 moment increment has been used in lieu of wind tunnel tests to account for fuselage and nacelle moments, the balancing loads to be used for design purposes should be taken as either item 16 or item 22 in CAM 04 Table III, whichever are most severe. This is to allow for a possible range of fuselage and nacelle moment coefficients.

3. The chord distribution illustrated in CAR Fig. 04-4 is intended to simulate a relatively high angle of attack condition for the stabilizer, in which very high unit loadings can be obtained near the leading edge. The opposite loading required for the elevator in the balancing condition provides for the control force which the pilot might need to exert to hold the airplane in equilibrium.

4. In CAR Fig. 04-4, the load from the elevator is shown as a concentrated load acting at the elevator hinge line. The hinge moment is, of course, resisted by the control system and therefore does not affect the stabilizer. It will be noted in CAR 04.2210(b) that the opposite elevator load, P, may be assumed equal to zero when the balancing load is obtained with flaps deflected (Conditions VII and VIII). This is based on the improbability of the pilots having to push on the elevator control in order to obtain balance with flaps down.

.2211 MANEUVERING (HORIZONTAL SURFACES)

1. The requirements for maneuvering loads outlined in CAR 04 are intended mainly to place the determination of such loads on a speed - force coefficient basis, to specify values which agree substantially with previous practice, and to provide for the effects of increasingly greater airplane speeds. It should be understood that the method is designed for application to conventional airplanes and that in determining the maneuvering loads the designer should consider the type of service for which the airplane is to be used.

2. The design values of C_N specified in CAR 04 represent coefficients which can be attained by deflecting the control surfaces, the highest value representing the largest deflection of the movable surface expected at the design speed. Lower values are used for up loads on the horizontal tail surfaces and for the vertical tail surfaces, as the corresponding control forces are expected to be less in these cases. The numerical values of the coefficients are coordinated with the value of the factor K_p in the equation for design speed and do not represent the maximum coefficients which can be obtained with conventional control surfaces. Higher values may be desirable in certain cases, depending on the purpose of the airplane.

3. The chord distribution shown in CAR Fig. 04-5 represents approximately the type of loading obtained with the movable surface deflected. For tail surfaces, this type of loading is critical for the movable surface and for the rear portion of the fixed surface.

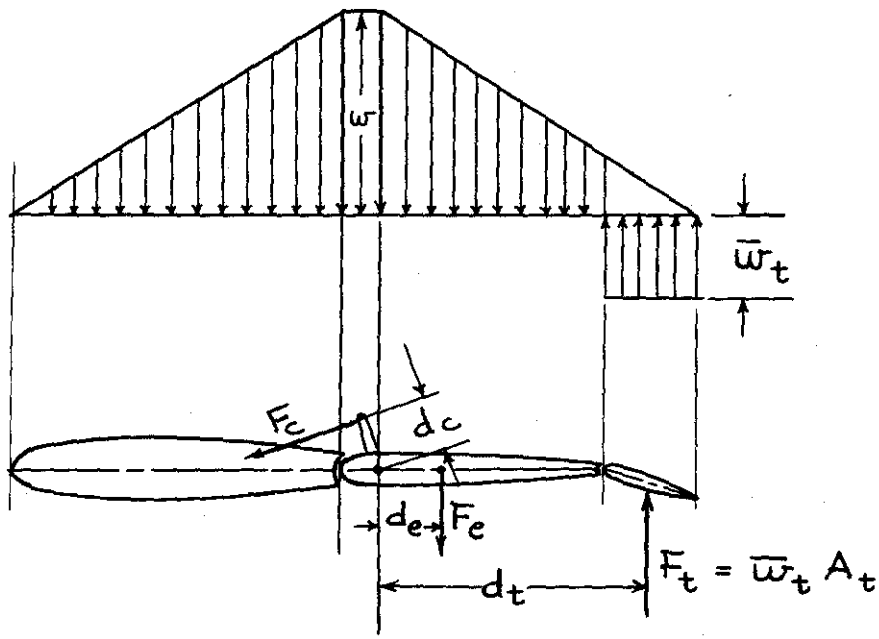

$$F_e = \frac{F_t d_t + F_c d_c}{d_e}$$

F_c = CONTROL SYSTEM FORCE

F_t = TOTAL TAB LOAD

F_e = TOTAL ELEVATOR LOAD

FIG.23 TAB LOADING CONDITION

(Ref. CAM 04.2213)

.2212 DAMPING (HORIZONTAL SURFACES)

1. When a control surface is deflected suddenly the full maneuvering load tends to build up immediately, after which the airplane begins to acquire an angular velocity. This angular motion causes the direction of the relative air stream over the fixed surface to change, which causes the air load on this surface to build up in a direction such as to oppose the angular rotation of the airplane. This load is concentrated near the leading edge of the fixed surface and is commonly referred to as the damping load. It is provided for in CAR 04 as a supplementary condition based on the initial maneuvering condition. The damping load is closely related in magnitude to the initial maneuvering load which produces it, so that it is convenient to use the latter loading condition to determine the damping load on the fixed surface. To avoid the necessity for a separate analysis for damping loads, the distribution is made the same as for the balancing loads. In the case of the horizontal surfaces, the damping load therefore acts as a minimum limit for the design of the fixed surface and need not be investigated when the balancing load is critical.

.2213 TAB EFFECTS (HORIZONTAL SURFACES).

1. The loading condition specified in CAR 04.2213 is diagrammatically illustrated in Fig. 23. This condition represents the case of the tab load and the control force both acting so as to resist the hinge moment due to t. air load on the movable surface. For convenience, the distances and moments can be computed for the neutral position of the movable surface and tab. Actually, the tab load will tend to decrease slightly when the movable surface is deflected, but this effect, being small and difficult to determine rationally, can be neglected.

.2220 MANEUVERING (VERTICAL SURFACES).

1. The comments in CAM 04.2211 in regard to horizontal surfaces also apply, in general, to the vertical surfaces.

2. It is specified that the value of V_p shall not be less than the level flight speed with one engine dead. This is based on the assumption that the unbalanced yawing moment present in such a condition will be balanced by the vertical tail surfaces. In some cases it may be advisable to increase the value of the normal force coefficient to account for features such as engines which are relatively far from the plane of symmetry. In estimating the speed with one engine dead the following approximate equation may be used:

$$V_p = 0.9\, V_L \left[\frac{n-1}{n}\right]^{1/3}$$

Where V_p = speed with one engine dead.

V_L = normal high speed.

n = total number of engines.

.2221 DAMPING (VERTICAL SURFACES).

1. The comments of CAM 04.2212 in regard to horizontal surfaces also apply, in general, to the vertical surfaces.

.2222 GUSTS (VERTICAL SURFACES)

1. The following points should be noted in connection with this requirement:

a. This gust condition applies only to that portion of the vertical surface which has a well defined leading edge. The total effective area for this condition is therefore the sum of the fin and rudder areas which lie behind such leading edge. In cases where the fin fairs gradually into the fuselage the leading edge is considered to be well defined for those longitudinal sections through the fin and rudder which have thickness-chord ratios of .20 or less. For the purposes of this requirement the "fin" is considered to include any rudder balance area ahead of the extended trailing edge of the fin.

b. The chord distribution specified in CAR Fig. 04-6 is applicable to those cases in which the mean chords of the effective fin and rudder areas are of approximately the same magnitudes. When this figure is used it should be noted that $\overline{w}$ refers to the average limit pressure over the total effective area of the vertical surface. The total load acting is therefore equal to $\overline{w}$ times the total effective area. This load is, however, applied to the fin only, in accordance with the specified distribution.

c. When the mean chords of the effective fin and rudder areas are of considerably different magnitude, the chord distribution for a symmetrical airfoil should be used. This distribution can be obtained from the curve marked "experimental mean" of Fig. 11, NACA Technical Report No. 353.

.224 WING FLAPS.

1. In the design of wing flaps, the critical loading is usually obtained when the flap is completely extended. The requirements outlined in CAR 04 apply only when the flaps are not used at speeds above a certain predetermined design speed. As noted in CAR 04.743, a placard is required to inform the pilot of the speed which should not be exceeded with flaps extended. Reference should be made to current NACA Reports and Notes for acceptable flap data.

.230 GENERAL.

1. In all cases the limit loads for control systems are specified as 125 per cent of the actual loads corresponding to the control surface limit loading, with certain maximum and minimum control force limits. The factor of 1.25 is used to account for various features, such as:

a. Differences between the actual and the assumed control surface load distribution.

b. Desirability of extra strength in the control system to reduce deflections.

c. Reduction in strength due to wear, play in joints, etc.

2. The maximum control force limits are based on the greatest probable forces which will be exerted by the pilot. These forces can be exceeded under severe conditions, but the probability of this occurrence is very low. The ultimate factor of safety of 1.5, which is required in any case, will permit the maximum limit load to be exceeded for a relatively short time without serious consequences.

3. The minimum control force limits apply only to cases in which the control surface limit loads are relatively small. The minimum control forces may be applied when the control surfaces are completely utilized and are against the stops.

4. The requirement of the multiplying factor of safety of 1.20 for fittings does not apply in the case of control systems, as the factor of 1.25 provides a sufficient margin and conservative rules are specified for determining allowable bearing stresses in joints. When the control system is designed by either the maximum or minimum control forces it is also unnecessary to use the extra factor of safety for fittings.

.234 FLAP AND TAB CONTROL SYSTEMS.

1. It should be noted that the flap position which is most critical for the flap proper may not also be critical for the flap control mechanism and supporting structure. In doubtful cases the flap hinge moment can be plotted as a function of flap angle for various angles of attack within the design range. The necessary characteristic curves should be obtained from reliable wind tunnel tests.

2. The following design conditions apply to crank and twist type controls for airplanes certificated in the "Transport" category:

a. From the cockpit control to the control system stops, tab control systems should be designed to withstand the following limit loads:
   (1) A torque of 133 inch-pounds applied to the control knob in the case of twist controls.
   (2) A torque given by the relation $T = 100\ R$ applied to the control wheel or crank in the case of controls that are not operated by a twisting motion. In this category will fall cranks, levers, and handwheels with a well-defined rim which can be grasped for turning.

b. From the control system stops to the tab, tab control systems should be designed to withstand limit loads corresponding to 125 percent of the limit load used for the design of the tab. In the case of multiple tabs or multiple surfaces each incorporating a tab, 125 percent of the limit load should be applied to all tabs simultaneously.

c. Care should be taken to secure a rugged connection between the tab and the irreversible unit.

.249 GENERAL.

1. Tail Wheel Type Gear. The basic landing conditions outlined in CAR 04.24 for conventional land type gear are tabulated in Fig. 24. This chart can be used as a summary of the load factors for the landing conditions by inserting the actual values used.

2. Nose Wheel Type Gear. The following design conditions have been found acceptable in certain cases of nose wheel gear. It is emphasized, however, that all unusual features of a particular design should be investigated to insure that all possible critical loadings have been considered. See also CAM 04.340 for a discussion of energy absorption tests.

a. Three-Wheel Landing with Vertical Reactions. The minimum limit load is specified in CAR 04 Fig. 04-10. The value of the sum of the static ground reactions shall be the weight of the airplane less landing gear. The total load shall be divided between the front and rear gear in inverse proportion to the distances, measured parallel to the ground line, from the CG of the airplane less landing gear to the points of contact with the ground. The load on the rear gear shall be divided equally between wheels. Loads shall be assumed to be perpendicular to the ground line in the three-wheel landing attitude, with all shock absorbing units and tires deflected to one-half their total travel unless it is apparent that a more critical arrangement could exist. The critical positions of the CG shall be investigated. The minimum ultimate factor of safety shall be 1.5.

b. Three-Wheel Landing with Inclined Reactions. The minimum limit load factor is specified in CAR 04 Fig. 04-10. The resultant of the ground reactions shall be a force lying in the plane of symmetry and passing through the CG of the airplane less landing gear. The basic value of the vertical component of the resultant force shall be equal to the weight of the airplane less landing gear. The horizontal component shall be 25 per cent of the vertical, acting aft. The total force shall be so divided between the front and rear gear that the resultant moment acting on the airplane will be zero. The load on the rear gear shall be divided equally between wheels. The shock absorbers and tires shall be deflected to the same degree as in condition a above. The critical positions of the CG shall be investigated. The minimum ultimate factor of safety shall be 1.5.

c. Two-Wheel Landing with Vertical Reactions - Nose Up. The minimum limit load factor is specified in CAR 04 Fig. 04-10. The airplane shall be assumed to be in an extreme nose-up attitude. The gross weight of the airplane less the rear gear shall be assumed to act at the rear wheels in a direction perpendicular to the ground line. The total load shall be divided equally between the two rear wheels. The resultant moment on the airplane shall be balanced by inertia forces. The shock absorbers and tires shall be deflected to the same degree as in condition a above. The minimum ultimate factor of safety shall be 1.5.

LANDPLANE LANDING CONDITIONS
FOR TAIL WHEEL TYPE GEAR (SEE CAR 04.24)

CONDITION	LEVEL	3-POINT	SIDE (1)	ONE-WHEEL LANDING (1)	BRAKED
REFERENCE CAR 04.	.241	.242	.243	.244	.245
LOAD FACTOR n (2) (Limit)	$2.80 + \frac{9000}{W + 4000}$ (3) $3.00 + 0.133(W/S)$	Same as Level	.667	.5 Level	1.33
ATTITUDE	Propeller Axis Horizontal	3-Point	3-Point (4)	Propeller Axis Horizontal	3-Point (4)
VERTICAL COMPONENT	nW (5)	nW (5)(7)	nW (6)	nW (5)	nW (5)
REARWARD COMPONENT	Resultant (8) Thru CG	Zero	.55 nW	Resultant (7)(8) Thru CG (Side View)	.55 Vertical
SIDE COMPONENT	Zero	Zero	nW (Inward)	Zero	Zero
SHOCK STRUT DEFLECTION	50% Travel (9)	50% Travel (9)	Static Position	50% Travel	50% Travel
TIRE DEFLECTION	50%	50%	25%	50%	25%

(1) Components act on one wheel only.
(2) Need not exceed 4.33.
(3) Use smaller value. See also Note (2) above.
(4) Reaction at tail equals zero.
(5) W is gross weight less wheels and chassis.
(6) W is gross weight.
(7) Distributed to wheels and skid so that moments about CG equals zero.
(8) Need not exceed 25% vertical component.
(9) Unless apparent more critical conditions exists.

FIG. 24 LANDPLANE LANDING CONDITIONS FOR TAIL WHEEL TYPE GEAR

d. Two-Wheel Landing with Inclined Reactions - Nose up. The minimum limit load factor is specified in CAR 04 Fig. 04-10. The airplane shall be assumed to be in an extreme nose-up attitude. The resultant force shall be determined in the same manner as in condition b above except that the gross weight of the airplane less the rear gear shall be used. The total load shall be divided equally between the two rear wheels. The resultant moment on the airplane shall be balanced by inertia forces. The shock absorbers and tires shall be deflected to the same degree as in condition a above. The minimum ultimate factor of safety shall be 1.5.

e. Two-Wheel Landing with Inclined Reactions - Nose down. The minimum limit load factor is specified in CAR 04 Fig. 04-10. The airplane shall be assumed to be in a nose-down attitude with the front wheel just off the ground. The resultant force shall be determined in the same manner as in condition b above except that the weight of the airplane less the rear gear shall be used. The total load shall be divided equally between the two rear wheels. The resultant moment on the airplane shall be balanced by inertia forces. The shock absorbers and tires shall be deflected to the same degree as in condition a above. The critical position of the CG shall be investigated. The minimum ultimate factor of safety shall be 1.5.

f. Two-Wheel Landing with Brakes - Nose down. The minimum limit load factor shall be 1.33. The airplane shall be assumed to be in a nose-down attitude with the front wheel just off the ground. The gross weight of the airplane less the rear gear shall be assumed to act at the rear wheels in a direction perpendicular to the ground line. In addition, a horizontal aft component equal to .55 times the vertical shall be applied at each wheel at the points of contact with the ground. The total load shall be divided equally between the two rear wheels. The resultant moment on the airplane shall be balanced by inertia forces. The tires shall be assumed to have deflected not more than one-quarter the nominal diameter of their cross-section, and the deflection of the shock absorbers shall be the same as in condition a above. The minimum ultimate factor of safety shall be 1.5.

g. Side Drift Landing. The minimum limit load factor is specified in CAR 04 Fig. 04-10. The attitude of the airplane, the vertical components of the landing gear reactions, and the deflections of the shock absorbers and tires shall be the same as in condition a above. In addition, a horizontal aft component and a side component, each equal to .25 times the vertical component, shall be applied at each wheel at the points of contact with the ground. The resultant moment on the airplane shall be balanced by inertia forces. The minimum ultimate factor of safety shall be 1.5.

h. Side Drift Landing with Brakes. The minimum limit load factor shall be 1.0. The attitude of the airplane, the static ground reactions on the front and rear gear, and the deflections of the shock absorbers and tires shall be the same as in condition a above. The total load on the rear gear shall, however, be applied entirely on one wheel. In addition, a side component equal to .75 times the vertical component shall be applied at each wheel at the points of contact with the ground. The side load at the rear wheel shall be assumed to act inward and the side load at the nose wheel shall be assumed to act in the same direction. A horizontal aft component equal to .55 times the vertical component shall be applied at the point of contact with the ground of each wheel equipped with brakes. (It should be noted that one rear wheel is not loaded). The resultant moment on the airplane shall be balanced by inertia forces. The minimum ultimate factor of safety shall be 1.5.

i. One-Wheel Landing. An investigation of the fuselage structure is required for a one-wheel landing in which only those loads obtained on one side of the fuselage in condition e above are applied. The resulting limit load factor is therefore one-half of the minimum limit load factor specified in CAR 04 Fig. 04-10. (This condition is identical with condition e above insofar as the landing gear structure is concerned). The minimum ultimate factor of safety shall be 1.5.

3. Ski Gear. As noted in CAR 04.2410 the ground loads for ski gear are the same as for wheel gear. However, the strength of skis and ski pedestals must be substantiated in accordance with the requirements of CAR 15.12. See also CAM 15.12. Approval of ski installations is covered in CAM 04.061. The Canadian ski gear requirements, which are of interest to manufacturers contemplating export to Canada, are listed in Inspection Handbook, Chapter XII.

4. Special Considerations. When lower limit and ultimate load factors are used under the provisions of CAR 04.240, adequate provision should be made to likewise hold the taxiing accelerations to lower values. Consideration should also be given to the fact that with such gear there is a tendency to make landings with a higher rate of descent than is common with gear developing higher factors. When lower factors are used in the case of rubber shock absorbers, special rulings should be obtained from the Secretary. When lower factors are used with oleo type gear the following practice has been found acceptable.

a. Such lower design load factors should never be less than one half the conventional values.

b. A margin between the design load factor and the load factor developed in the drop test should be shown. This margin should be at least 20 per cent (of the design load factor) at the one half value noted in a above, and may decrease linearly to zero as the conventional design load factors are reached.

c. The use of such lower ultimate load factors should be justified by drop tests in which the complete landing gear is used.

The provisions of a and b above can be expressed by the formulas given below. The maximum permissible developed load factor is

$$n_1 = \frac{2n_o\, n}{3n_o - n},$$

and the minimum required ultimate load factor for use in the analyses is

$$n = \frac{3n_o\, n_1}{2n_o + n_1},$$

but n should not be less than $0.5n_o$, where

n_o = ultimate load factor (Value from CAR Fig. 04-10 times 1.5),

n = minimum required ultimate load factor for use in the analysis,

n_1 = maximum permissible load factor developed in the drop test.

.2411 ENERGY ABSORPTION.

1. The definition of stalling speed V_s used in drop height calculations is given in CAR 04.113. If accurate flight test data for the airplane in question, or for a very similar airplane, are available, such data may be used as a basis for calculating the power-off stalling speed. However, the determination of speeds in the flight tests used in this connection should not involve an extensive extrapolation of the airspeed calibration. See also CAM 04.340.

.2420 ENERGY ABSORPTION.

1. See CAM 04.340 for general discussion.

.243 SIDE LOAD.

1. This condition represents a loading such as would be obtained in a ground loop.

.244 ONE WHEEL LANDING.

1. This condition represents the "whipping" condition obtained in either of the two following cases:

a. The airplane strikes the ground with one wheel only. The initial loading is such as to produce a relatively high angular acceleration, which is resisted by the angular inertia of the airplane about its longitudinal axis through the center of gravity.

b. After striking the ground on one wheel, or after a landing with considerable side load, the airplane has acquired an angular velocity about its longitudinal axis and tends to roll over on one wheel. By

the time the opposite wheel is clear of the ground, any appreciable side load will probably have disappeared, so that the one-wheel landing condition can be used again without modification. Any tendency to continue rolling after the load has been transferred entirely to one wheel will not be likely to increase the load on that wheel, as the kinetic energy of rotation will be converted into potential energy by the rise of the center of gravity.

2. This condition does not require an additional investigation of the landing gear structure as the loads are the same as in level landing.

.246 SIDE LOADS ON TAIL WHEEL OR SKID.

1. It is required that suitable assumptions shall be made to cover side loads acting on tail skids or tail wheels which are not free to swivel or which can be locked or steered by the pilot. In such cases it will be satisfactory to consider a side load acting alone and having a limit value equal to one-fourth the limit load acting on the tail skid (or wheel) in the three point landing condition (CAR 04.242). This side load should act normal to the plane of symmetry at the center of contact of the skid (or wheel) and the ground. The attitude of the airplane and the deflections of the tire and shock absorber unit should be assumed the same as in the three point landing condition. The minimum ultimate factor of safety should be 1.5.

2. It is also recommended that this side load condition be applied to swiveling tail wheel units with the modification that the wheel is assumed to be rotated 90 degrees from the plane of symmetry and the side load to be applied through the center of the axle.

.250 GENERAL.

1. The basic water landing conditions are tabulated in Fig. 25. This chart can be used as a summary of the load factors for the landing conditions by inserting the actual values used.

2. The landing conditions outlined for float seaplanes correspond, in general, to the conditions used for landplanes. These conditions apply to conventional float installations and in such cases will provide a sufficient range of loadings. When unconventional types of float bracing are employed it may be advisable to investigate other landing attitudes, depending on the type of loading which appears to be most critical for the structure.

3. In certain landing conditions a higher value of the minimum factor of safety is required for some portions of the structure. This is primarily for the purpose of obtaining greater rigidity and to provide for possible variations in the load distribution. In general, whenever the total factor of safety is 1.80 or greater, no further increase is required for fittings. (See CAR 04 Table 04-7). It may be advisable, however, to use an increased factor for fittings which are highly stressed or subjected to reversal of loading, in order to provide for the effects of stress concentration, fatigue, and wear at joints.

SEAPLANE LANDING CONDITIONS See CAR 04.25			
COMPONENT	FLOAT(1)		
CONDITION	Inclined Reaction	Vertical Reaction	Side Landing
REFERENCE CAR 04	.251	.252	.253
n (Limit)	4.20(2)	4.33 (2)	4.0
VERTICAL REACTION	nW (3)	nW (3)	nW (3)
REARWARD REACTION	1/4 Vertical	0	0
SIDE REACTION	0	0	1/4 Vertical
RESULTANT	Through CG Less Floats and Bracing		In plane through CG and perpendicular to propeller axis
FACTOR OF SAFETY	1.85 (4) 1.50 (5)		1.50
ATTITUDE	Propeller axis or reference line horizontal		

(1) For float requirements see CAR 04.257 and CAR 15.11
(2) Need not exceed 3.00 + .133(W/S).
(3) W is gross weight less floats and bracing.
(4) For float attachments and fuselage carry-thru members.
(5) For remaining structural members.

FIG. 25 SEAPLANE LANDING CONDITIONS

.2540 LOCAL BOTTOM PRESSURES

1. Since it is assumed that local pressures are applied only over a limited area at any instant, it is necessary to set up some value for such an area. Any solution to this problem will necessarily be an arbitrary one, therefore, it is desirable to consider the practical side of the picture. If the designer is held strictly to a certain shape and size of loaded area, it might complicate the structural analysis problem. To avoid this, a more flexible requirement is set up to the effect that the area shall be taken such as to cause the greatest local stresses in the adjacent structure. In no case need this area exceed a value of 2.0 square feet.

2. To illustrate the above, if a conventional plate-stringer bottom is used, the area could be taken as that determined by the stringer and frame spacing. This would be critical for the plate. To check the stringer and the attachment of the stringer to the frame, and to produce a maximum local load on the frame, the pressure would be applied to one stringer over an area of the same value, assuming the resulting load to be resisted entirely at the stringer attachment.

3. There have been several failures in actual practice of various hull components due to negative pressures aft of the front step. However, since data concerning negative pressures are so limited, it is not deemed advisable to specify any design criteria for this condition.

.2541 DISTRIBUTED BOTTOM PRESSURES

1. Although the bottom plating and stringers will be designed by local pressure, major members such as cross-frames and the keel will be critical when larger areas are loaded. Water tests indicate that average pressures over relatively large areas are considerably less than the "peak" local pressures. The requirement for distributed pressure consists of applying simultaneously over the entire hull bottom one-half of the pressure values required for local pressures.

2. The distributed pressure requirements are not intended to design the shell structure of the hull (sides in shear, etc.) but apply to belt frames, keels, bulkheads, and the attachment of the cross frames to the sides of the hull structure.

3. See CAM 04.2540-3.

.2542 STEP LOADING CONDITION

1. The local and distributed pressure requirements are intended to take care of the hull bottom as such, and therefore it is not too important to correlate the maximum impact factor with bottom pressure. This is further justified by the fact that the maximum impact factor does not occur until a considerable portion of the bottom has been submerged, at which time the bottom pressures have dropped considerably below the maximum values likely to be obtained locally.

2. The step loading condition is critical for the hull in shear and bending, and also may produce maximum downward inertia loads from nacelles, etc. The calculations can be considerably simplified if the resultant load is assumed to pass vertically through the center of gravity. Although the load may act at some point other than the c.g. and may actually be inclined rearward, these refinements will have very little effect on the shears and bending moments in the hull structure and may therefore be neglected. In order to provide adequate strength against forward inertia loads coming from wings, nacelles, etc., a rearward acting load is included in the bow loading condition.

3. To avoid excessive local shear loads and bending moments near the point of water load application, the water load may be distributed over the hull bottom. The area to be used in determining pressures (for comparison with those specified in CAR 04.2541(a)) should be the projected area of the hull bottom on a horizontal plane which intersects the bottom of the keel at the front step.

.2543 BOW LOADING CONDITION

1. The most severe upward shear loads and bending moments for the forward portion of the hull structure are probably caused by an impact load near the bow. Such a loading condition is likely to be obtained in landing or in take-off from rough water. A simplified procedure to cover this condition is discussed below. More rational methods may, of course, be used, subject to acceptance by the Administrator.

2. Considering the arbitrary nature of the hull loading conditions, it seems reasonable to dispense with numerous refinements in specifying the loading condition and to apply a concentrated load at some specified point in an arbitrarily chosen direction. Therefore, the bow impact load is applied to the keel at a point one-tenth of the distance from the bow to the step, and in an upward and rearward direction at an angle of 30° from the vertical. See Figure 25a. As this loading condition will produce a combination of vertical horizontal, and angular accelerations, all items of weight will produce inertia loads accordingly.

3. In those cases when it would be otherwise unnecessary to calculate the moment of inertia of the airplane about its lateral axis, the specified condition may be replaced by a simplified loading by making some conservative assumptions. To simplify the computation of inertia loads, an 'average' linear acceleration factor can be used. The approximate method then consists of applying to the keel at a point one-tenth of the distance from the bow to the step a load equal to $n_b W_e = 1/2 n_s W_e$ and computing the inertia loads over the forward portion of the hull by using a load factor of $0.65n_b$ applied vertically, together with a horizontal component of $0.50n_b$. This would result in an unbalanced bending moment and shear by the rearward portion of the hull. Since this condition is not likely to be critical for the rearward portion of the structure, these unbalanced forces and moments need not be applied to the rear portion for design purposes. The 'simplified' system for the bow loading condition is illustrated by Fig. 25b.

4. The use of a horizontal component of $.50n_b$ in the 'simplified' bow loading condition insures adequate forward-acting inertia loads for local design.

5. To avoid excessive local shear loads, the water reaction may be distributed over the hull bottom. The area to be used in determining pressures (for comparison with those specified in CAR 04.2541(a)) should be the projected area of the hull bottom on a plane which is normal to the resultant water load, and which intersects the bottom of the keel at a point one-tenth of the distance from the bow to the step.

.2544 STERN LOADING CONDITION

1. To simplify the computations and to decrease the amount of work required, the area to be used with the pressures specified in CAR 04.2541(a) may be taken as the projected area of the hull bottom on the plane defined in CAM 04.2542-3.

.2545 SIDE LOADING CONDITION

1. In cases where the specified condition appears to yield unreasonable results, alternative procedures may be used, subject to acceptance by the Administrator.

2. To avoid excessive local shear loads, the water reaction may be distributed over the hull bottom. The area to be used in determining pressures (for comparison with those specified in CAR 04.2541(a)) should be the projected area of the hull bottom on the plane defined in CAM 04.2542-3. The load to be used in determining pressures should be the vertical component of the resultant load.

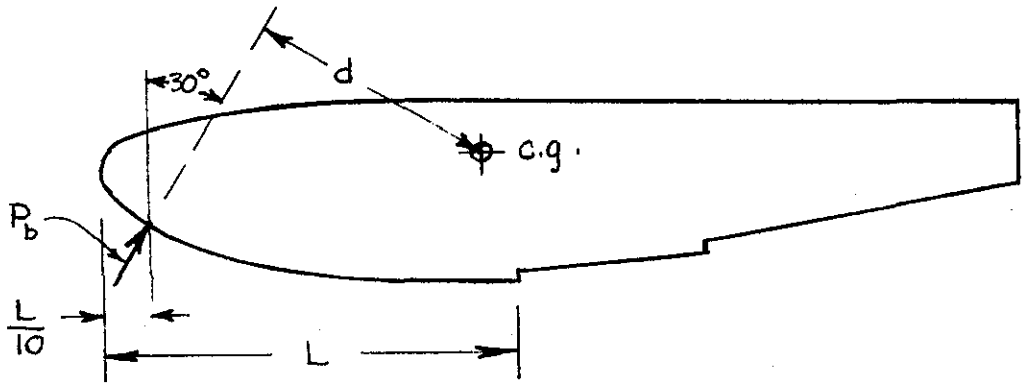

FIG 25a APPLICATION OF BOW LOAD

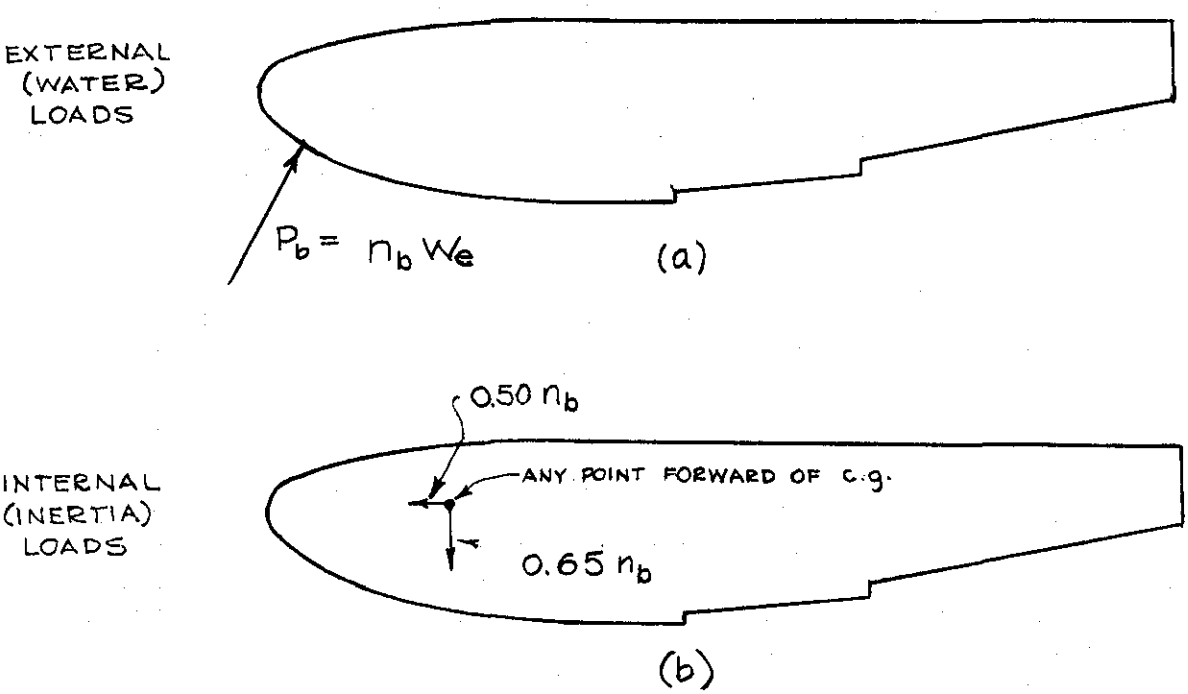

FIG. 25b SIMPLIFIED BOW LOADING CONDITION

.266 RIGGING LOADS.

1. The requirements are based on the necessity for proportioning wire sizes so as to prevent an excessive load being produced in any wire while rigging any other wire. They provide for an average rigging load of 20 percent. This means that when the maximum allowable ratio of rigging loads (two to one) exists between two wires, one will be assumed to be rigged to 13.3 percent, the other to 26.7 percent. If a larger ratio were permitted, such as three to one for instance, there would be a possibility of obtaining an excessively high rigging load in one wire while rigging the other to a relatively low percentage of its rated load.

2. A specific example of the application of these principles to an airplane wing is found in a biplane cellule in which lift wires are used for both front and rear spars, but which has only one landing wire (or pair of wires). In such a case the landing wire must act as a counter wire for all of the lift wires. This means that a relatively high load must be supplied by the landing wire to counteract normal rigging loads in the flying wires. To meet the requirement as to the maximum allowable ratio of rigging loads it is therefore necessary to use a large landing wire, even though its design load from the flying conditions is comparatively small. In this example it will also be noted that the drag truss wires may be loaded by rigging the flying wires. Obviously, the drag truss wires should be strong enough to prevent excessive rigging loads from being built up.

.271 FITTINGS.

1. As noted in the requirement a fitting is so defined as to include the bearing on the connected parts. This includes the bearing of bolts on spars.

.272 CASTINGS.

1. The additional ultimate factor of safety for castings is to account for the reduction in strength due to internal imperfections and also for the difference between the actual physical properties of the casting and the properties of cast test bars. It should be noted that when this factor is used, the 50% stress reduction specified in ANC-5 for casting materials may be disregarded. Consideration will be given to reduction in the specified ultimate factor of safety when suitable means of internal inspections are used and when, in addition, it can be shown that such means of inspection will result in the acceptance for use of only those castings having a definite value of minimum strength at the critical sections.

WIRES AT SMALL ANGLES.

1. The requirement is based on the fact that a decrease in the angle, between a lift wire and a spar. will greatly increase the deflection for a given loading. The formula used is so adjusted as to maintain, approximately, the deflection which would be obtained for a 30 degree angle between the wire and the spar. It will be noted that the value of K becomes 1.0 when the angle is 30 degrees. Since K approaches infinity as the angle approaches zero, it will be found impractical to design wire-braced structures for small angles between the wires and the members which they support.

CONTROL SURFACE HINGES AND CONTROL SYSTEM JOINTS.

1. It will be noted that it is unnecessary to prove the ultimate strength of ball and roller bearings if the limit load does not exceed the manufacturer's non-Brinell rating. If, however, the ultimate factor of safety of the bearing is proved, consideration will be given to the use of a yield factor of safety of less than 1.0 with respect to the manufacturer's non-Brinell rating provided that such use is substantiated by tests.

1. The purpose of the requirement is to provide additional strength for that portion of the wing structure which transmits the main landing gear reactions to the fuselage. It applies to all parts of the wing affected, including fittings of a type the failure of which would impair the strength of the wing in flight.

PROOF OF STRUCTURE.

000 1. Acceptable methods for computing the allowable loads and stresses corresponding to the minimum mechanical properties of various materials are given in the Army-Navy-Commerce Publication ANC-5, "Strength of Aircraft Elements", obtainable from the Superintendent of Documents, Washington, D.C., for 35¢.

01 COMBINED STRUCTURAL ANALYSIS AND TESTS.

1. The results of load tests as referred to in the requirement may be interpreted as the results of tests on similar structures when such tests are applicable.

022 1. Detailed recommendations as to acceptable methods of conducting structural tests are contained in Inspection Handbook, Chapter VIII, "Test Procedure".

2. Since it is required that the determination of test loads, the apparatus used in tests, and the methods of conducting tests shall be satisfactory to the Administrator, it is strongly recommended that, in the case of structural tests on all major units, the above items be fully covered by a report submitted to and approved by the Administrator before the actual tests are conducted.

1 PROOF OF WINGS

A DETERMINATION OF SPAR LOADING

1. The following method of determining the running load on the spars of a two-spar, fabric-covered wing has been developed to simplify the calculations required and to provide for certain features which cannot be accounted for in a less general method. It will usually be found that certain items are constant over the span, in which case the computations are considerably simplified.

2. The net running load on each spar, in pounds per inch run, can be obtained from the following equations:

$$y_f = \left[\left\{C_N\,(r-a) + C_{M_a}\right\} q + n_2\, e\,(r-j)\right] \frac{C'}{144\,b}$$

$$y_r = \left[\left\{C_N\,(a-f) - C_{M_a}\right\} q + n_2\, e\,(j-f)\right] \frac{C'}{144\,b}$$

Where y_f = net running load on front spar, lbs /inch.
y_r = net running load on rear spar, lbs /inch.
a, b, f, j, and r are shown on Fig. 26 and are all expressed as fractions of the chord at the station in question.

301230 O—41——7

TABLE IV

COMPUTATION OF NET UNIT LOADINGS (CONSTANTS)

(Ref. CAM 04.32-A3)

		Stations Along Span				
1	Distance from root, inches					
2	C'/144 = (chord in inches) /144					
3	f, fraction of chord					
4	r, " " "					
5	b = r - f = ④-③					
6	a, fraction of chord (a.c.)					
7	j, " " " *					
8	e = unit wing wt., lbs/sq.ft.*					
9	r - a = ④-⑥					
10	a - f = ⑥-③					
11	r - j = ④-⑦					
12	j - f = ⑦-③					
13	C'/144 b = ②/⑤					

* These values will depend on the amount of disposable load carried in the wing.

(Note: the value of "a" must agree with the value on which C_{M_a} is based.)

q = dynamic pressure for the condition being investigated.

C_N and C_{M_a} are the airfoil coefficients at the section in question.

C' is the wing chord, in inches.

e is the average unit weight of the wing, in pounds per square foot, over the chord at the station in question. It should be computed or estimated for each area included between the wing stations investigated, unless the unit wing weight is substantially constant, in which case a constant value may be assumed. By properly correlating the values of e and j, the effects of local weights, such as fuel tanks and nacelles, can be directly accounted for.

n_2 is the net limit load factor representing the inertia effect of the whole airplane acting at the CG. The inertia load always acts in a direction opposite to the net air load. For positively accelerated conditions n_2 will always be negative, and vice versa. Its value and sign are obtained in the balancing process outlined in CAM 04.218.

3. The computations required in using the above method are outlined in Tables IV and V, in a form which is convenient for making calculations and for checking. The following modifications and notes apply to these tables:

a. When the curvature of the wing tip prevents the spars from extending to the extreme tip of the wing, the effect of the tip loads on the spar can easily be accounted for by extending the spars to the extreme span as hypothetical members. In such cases the dimension (f) will become negative, as the leading edge will lie behind the hypothetical front spar.

b. The local values of C_N, item 14, are determined from the design value of C_N in accordance with the proper span distribution curve. Fig. 18c is used for this purpose, together with the value of K_b obtained for this figure, as outlined in CAM 04.217-D.

c. Item 15 provides for a variation in the local value of C_M. For Condition I, the value of C_M should be determined from the design value of CP by the following equation, using item numbers from Tables IV and V:

$$C'_{M_a} = (14) \times ((6) - CP')$$

d. When conditions with deflected flaps are investigated, the value of C_{M_a} over the flap portion should be properly modified. For most other conditions C_{M_a} will have a constant value over the span.

e. It will be noted that the gross running loads on the wing structure can be obtained by assuming e to be zero, in which case items 19, 25 and 30 become zero, y_f becomes (18) x (13), y_r becomes (24) x (13), and y_c becomes (29) x (2).

TABLE V

COMPUTATION OF NET UNIT LOADINGS (VARIABLES)

(Ref. CAM 04.31-A3)

CONDITION ----

q	$C_{N_{I(etc)}}$	C'_C	C'_M or C.P.	n_z	n_{x_z}

		(Refer also to TableIV)	Distance b from root					
	14	$C_{N_b} = C_{N_{I(etc)}} \times R_b/K_b$						
	15	C_{M_a} (variation with span)						
Front Spar	16	(14) x (9)						
	17	(16) + (15)						
	18	(17) x q						
	19	n_z x (8) x (11)						
	20	(18) + (19)						
	21	y_f = (20) x (13), lbs/inch						
Rear Spar	22	(14) x (10)						
	23	(22) - (15)						
	24	(23) x q						
	25	n_z x (8) x (12)						
	26	(24) + (25)						
	27	y_r = (26) x (13), lbs/inch						
Chord Load	28	C_C (variation with span)						
	29	(28) x q						
	30	n_{x_z} x (8)						
	31	(29) + (30)						
	32	y_c = (31) x (2), lbs/inch						

B DETERMINATION OF RUNNING CHORD LOAD

1. The net chord loading, in pounds per inch run, can be determined from the following equation:

$$y_c = \left[C_C \ q + n_{x2} \ e\right] C'/144$$

Where y_c = running chord load, lbs /inch
C_c = chord coefficient at each station. The proper sign should be retained throughout the computations.
q = dynamic pressure for the condition being investigated.
n_{x2} = net limit chord load factor approximately representing the inertia effect of the whole airplane in the chord direction. The value and sign are obtained in the balancing process outlined in CAM 04.218. Note that when C_C is negative, n_{x2} will be positive.

e and C' are the same as in CAM 04.31-A2.

2. The computations for obtaining the chord load are outlined in Table V, Items 28 to 32. The following points should be noted:

a. The value of C_C, item 28, can usually be assumed to be constant over the span. The only variation required is in the case of partial-span wing flaps or similar devices.
b. The relative location of the wing spars and drag truss will affect the drag truss loading produced by the chord and normal air forces. This can easily be accounted for by correcting the value of C_C as indicated in CAM 04.129-A2 and Fig. 10.

3. It is often necessary to consider the local loads produced by the propeller thrust and by the drag of items attached to the wing. The general rules concerning these items are outlined in CAM 04.217-C. The drag of nacelles built into the wing is usually so small that it can be safely neglected. The drag of independent nacelles and that of wing-tip floats can be computed by using a rational drag coefficient or drag area in conjunction with the design speed. The beam and torsional loads applied to the wing through the attachment members should also be considered in the analysis. In general, the effects of nacelles or floats can be separately computed and added to the loads obtained in the design conditions.

C DETERMINATION OF RUNNING LOAD AND TORSION AT ELASTIC AXIS

1. The following method can be used in cases where it is desired to compute the running load along any given axis, together with the unit value of the torsion acting about that axis.

2. As shown in Fig. 27, x denotes the location of the reference axis, expressed as a fraction of the chord. The net running load along the locus of the points x and the net running torsion about these points are found from the following equations:

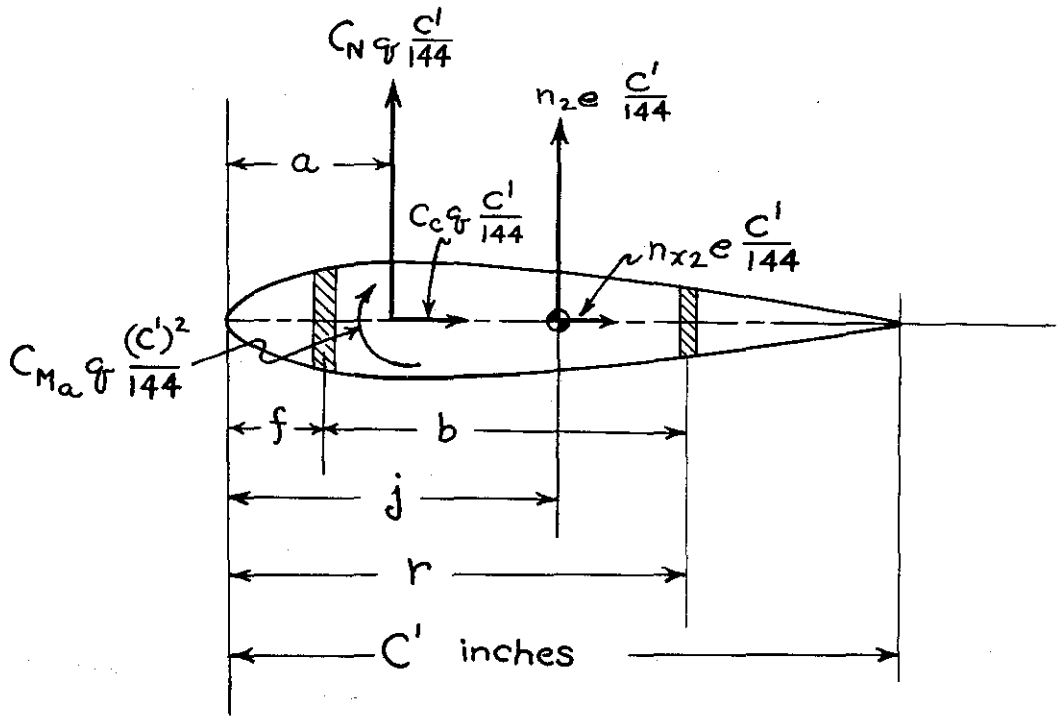

ALL VECTORS ARE SHOWN IN POSITIVE SENSE
(REF. CAM 04.31-A2)

FIG. 26

UNIT SECTION OF A CONVENTIONAL 2-SPAR WING

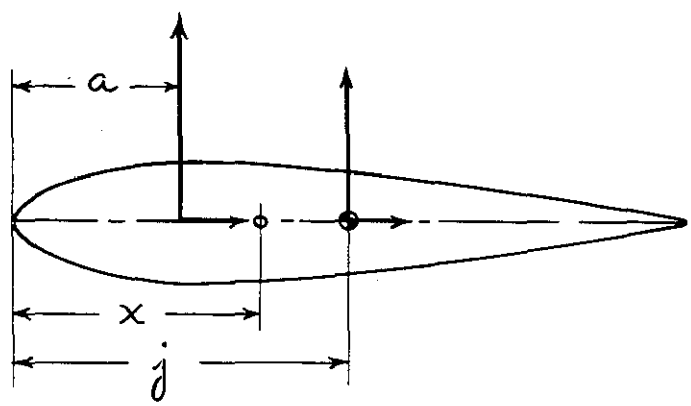

(REF. CAM 04 31-C2)

FIG. 27

SECTION SHOWING LOCATION OF ELASTIC AXIS

FIGS.26 and 27

$$y_x = (C_N q + n_2 e) \frac{C'}{144}$$

$$m_x = \left[\left\{C_N (x-a) + C_{M_a}\right\} q + n_2 e (x-j)\right] \frac{(C')^2}{144}$$

Where y_x is in pounds per inch run.
m_x is in inch pounds per inch run.
x is expressed as a fraction of the chord.
C' is the wing chord, in inches.

The remaining symbols are explained in CAM 04.31-A. (As noted previously, n_2 will always be negative in positively accelerated conditions.)

3. The computations required for this form of analysis can be conveniently carried out through the use of tables similar to Tables IV and V. The items appearing in each table would be changed to correspond to the equations given in 2 above. The computation of the running chord load can be made in the manner outlined in CAM 04.31-B.

LIFT-TRUSS ANALYSIS

1. Jury struts. In computing the compressive strength of lift struts which are braced by a jury strut attached to the wing, it is usually satisfactory to assume that a pin-ended joint exists at the point of attachment of the jury strut. The jury strut itself should be investigated for loads imposed by the deflection of the main wing structure. An approximate solution based on relative deflections is satisfactory, except when the jury strut is considered as a point of support in the wing spar analysis, in which case an accurate analysis of the entire structure is necessary.

2. Redundant Wire Bracing. When two or more wires are attached to a common point on the wing but are not parallel, the following approximate equations may be used for determining the load distribution between wires, provided that the loads so obtained are increased 25 per cent.

$$P_1 = \left[\frac{V_1 A_1 L_1 L_2^3}{V_1^2 A_1 L_2^3 + V_2^2 A_2 L_1^3}\right] B$$

$$P_2 = \left[\frac{V_2 A_2 L_1^3 L_2}{V_1^2 A_1 L_2^3 + V_2^2 A_2 L_1^3}\right] B$$

Where B = beam component of load to be carried at the joint,
P_1 = load in wire 1,
P_2 = load in wire 2,
V_1 = vertical length component of wire 1,
V_2 = vertical length component of wire 2,
A_1 and A_2 represent the areas of the respective wires, and
L_1 and L_2 represent the lengths of the respective wires.

The chord components of the air loads on the upper wing and the unbalanced chord components of the loads in the interplane struts and lift wires at their point of attachment to the upper wing should then be assumed to be

carried entirely by the internal drag truss of the upper wing.

3. Indeterminate Wing Cellules. In biplanes which have two complete lift truss and drag truss systems interconnected by an N strut, a twisting moment applied to the wing cellule will be resisted in an indeterminate manner, as each pair of trusses can supply a resisting couple. An exact solution involving the method of least work, or a similar method, can be used to determine the load distribution. For simplicity, however, it is usually assumed that the drag trusses resist only the direct chord loads and that all the normal loads and torsional forces are resisted by the lift trusses. This assumption is usually conservative for the lift trusses, but does not adequately cover the possible loading conditions for the drag trusses. In the usual biplane arrangement the lower drag truss will tend to be loaded in a rearward direction by the wing moment. Design Condition VI (CAR 04.2136) therefore represents the most critical condition for the lower drag truss. This condition should be investigated by assuming that a relatively large portion (approximately 75 per cent) of the torsional forces about the aerodynamic center are resisted by the drag trusses. In the case of a single-lift-truss biplane, the drag trusses must, of course, resist the entire moment of the air forces with respect to the axis of the lift truss.

E WING TORSION TESTS AND DETERMINATION OF COEFFICIENT OF TORSIONAL RIGIDITY C_{TR}

1. In order to determine the coefficient of torsional rigidity C_{TR}, it is necessary to apply a pure torsional couple near the wing tip and to measure the resulting angular deflection of the wing at selected intervals along the semi-span.

2. Set-up. The wing should be mounted on the fuselage or a suitable jig, either of which should be anchored solidly to the floor or wall to prevent movement or displacement of the wing. The landing gear should be blocked on the airplane. The torque load may be applied to the wing tip through several beams clamped to the wing as near to the tip as is practical, such as the outermost drag truss compression rib location. The platform cables should be attached to the torque beams an equal distance forward and aft of the elastic axis of the wing. This axis may be located experimentally by rocking the torque beam and noting the nodal point on the wing chord as viewed from the tip. Typical set-ups are shown in Figure 27a. Care should be taken to see that the strength of the local wing structure at the points of application of the torque loads from the beams is adequate. For conventional two spar wood wings, it is advisable to apply the load directly to the spars through wood blocks rather than attempt to carry the load through a rib to the spars. Wings which are to be fabric covered should be tested uncovered, unless a certain amount of conservatism is considered in comparing the results with Figure 32, in order to simulate the conditions found in service.

Scales for reading the deflections should be suspended from the leading and trailing edges of the wing (excluding the aileron T.E.) at intervals of approximately 10% of the wing semi-span, and should preferably be graduated in the decimal system with graduations sufficiently fine to obtain readings to a hundredth of am inch. The deflection readings can be readily obtained by the use of a "Wye" level or transit set up at some point that will permit sighting on all scales. Several additional scales should be attached to the fuselage and opposite wing (or jig) to determine if there is any relative movement of the entire airplane. The level should be checked against a bench mark on the wall before and after each group of readings.

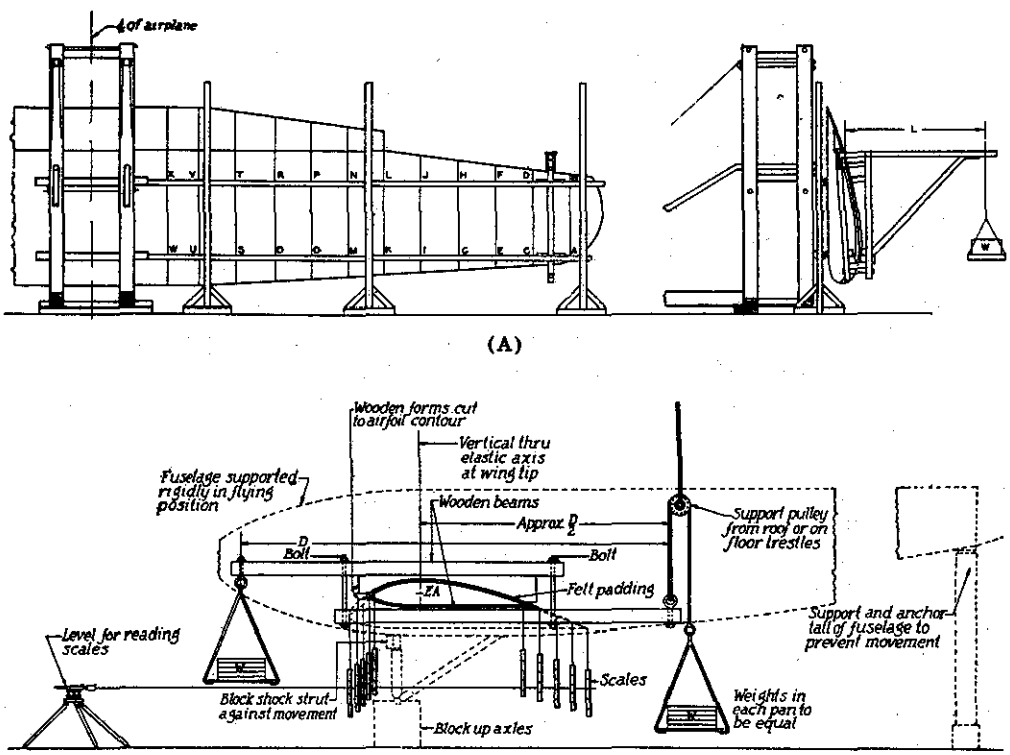

SET-UP FOR TORSIONAL TEST OF WING

FIG. 27a

3. Loading. The following procedure may be used:

a. Obtain zero torque reading on all scales, i.e., the two platforms should be supported so that there will be no torque couple acting.

b. Add a sufficient amount of weight to each platform until readable deflections are obtained. In general, for most aircraft from 1500 lbs. to 25,000 lbs. gross weight, it will be found desirable to make this first torque moment (in.-lbs.) equal numerically to twice the gross weight of the airplane. For aircraft below 1500 lbs. gross weight and biplanes, 70% of the above values may be used as a first trial. Care should be taken to include the tare weights of the platforms in the torque computations.

c. Take readings of all scales.

d. Add sufficient load to increase the torque by 50% and take scale readings.

e. Add sufficient load again to increase the original torque by 100% and take scale readings. This last torque should result in a twist of the wing of from 1.5 to 2.25° at the wing tip, which is desired in order to obtain satisfactory data for computing C_{TR}.

f. The data to be recorded are: the load applied; its lever arm; the deflection readings at selected points; and the exact location of these points both along the span and along the chord of the wing. It would be desirable to use a table such as shown on page .3-11 which would include all computations necessary for determining C_{TR}.

4. Interpretation of results. Having obtained the leading and tailing edge deflections (F and R in table Va) or a corresponding set of data, the angle of twist at each section of the wing for a given torque, or platform load, is calculated and plotted against the wing semi-span measured from the wing tip.

θ = Angle of twist in degrees at any section of the wing

$$\theta = \tan^{-1} \frac{\text{(Leading edge defl. (F) + trailing edge defl. (R))}}{\text{(c) Chord distances between scales}}$$

or

$$\theta = 57.3 \frac{(F + R)}{(C)} \text{ degrees}$$

Plotting the deflection (F and R) and angle of twist (θ) against wing semi-span (L) will reveal any inaccuracies in the data and will facilitate checking the results.

The coefficient of torsional rigidity may now be computed, using the following expression:

TABLE Va

WING TORSION TEST OF_____ MODEL_____ SERIAL NO._____

DATE_____ TORQUE ARM_____ inches

BY_____ LOCATED_____ inches from wing tip

MOMENTS (M) 1. W_1 x ARM =
2. W_2 x ARM =
3. W_3 x ARM =

DEFLECTION READINGS OF_____ WING (in.)

Platform load (incl. Platform wt.) (lbs)	section A-B		C-D		E-F		G-H		I-J		K-L		ETC
	Front	Rear	F	R	F	R	F	R	F	R	F	R	-
0	F_o	R_o											
1. W_1	F_1	R_1											
2. W_2	F_2	R_2											
3. W_3													
0									-				

DEFLECTIONS OF_____ WING (in.)

1. W_1	F_1-F_o	R_1-R_o										
2. W_2												
3. W_3												

TOTAL DEFLECTION OF_____ WING (in.) = F + R

1. W_1								
2. W_2								
3. W_3								

(C) CHORD DISTANCE BETWEEN DEFLECTION POINTS, F and R (in.)

ANGLE OF TWIST OF_____ WING (degrees) = 57.3 $\left(\frac{\text{total defl}}{C}\right)$

1. W_1								
2. W_2								
3. W_3								

(L) SEMI-SPAN DISTANCE FROM WING TIP (in.)

$dL/d\theta$ = 1/TANGENT TO "θ" VS "L" CURVE AT SECTIONS

1. W1							
2. W2							
3. W3							

$C_{TR} \times 10^{-6} = M \frac{dL}{d\theta} \times 10^{-6}$

1. W1							
2. W_2							
3. W_3							

Remarks:

$$C_{TR} = M \frac{dL}{d\theta} = \frac{M}{\frac{d\theta}{dL}}$$

where

C_{TR} = Coefficient if torsional rigidy (lb.in.^{2}). It is equal to the reciprocal of the torsional deflection per unit length per unit torque and is usually expressed in values to the 10^{-6}.

$d\theta$ = Angle of twist in degrees, in length dL (in inches), caused by a torque of M inch pounds. Referring to the curve of angle of twist (θ) vs. semi-span (L) shown in Figure 27b, it will be seen that $\frac{d\theta}{dL}$ = slope of the tangent drawn to the curve at any given point. Hence, it is only necessary to draw the required tangent to the curve at the value of L at which the C_{TR} is desired and obtain $\frac{d\theta}{dL}$ to use in the above formula for C_{TR}.

It is very important that the tangent line be drawn accurately. This can best be done by first drawing the reflected curve to the point of tangency (original curve may be drawn on transparent paper and used reversed or the tangent spotted in directly by use of a small mirror), and then by bisecting the resulting angle, as shown in Figure 27b for a wing section 60 inches from the wing tip. The tangent line should be extended to both axes so that the slope of the line may be computed accurately which in this example is equal to $d\theta_{60} / dL_{60}$.

C_{TR} should be computed for each of the three torque conditions used at a number of points along the wing semi-span and plotted against the distance from the wing tip (L). This curve will show the variation of torsional rigidity throughout the semi-span and may be used for purposes of comparison with wings similarly tested. See CAM 04.404-2 and Figure 32.

.311 BEAMS.

A WOOD SPARS.

1. The allowable total unit stress in spruce members subjected to combined bending and compression is covered in ANC 5, Section 2.41.

B METAL SPARS - GENERAL.

1. The bending moments and shears should be computed by precise formulas which allow for the effects of the axial loads. Formulas for shear can be developed by differentiating the formulas for bending moments. The values of EI used in the computations should preferably be determined from a test on a section of beam subjected to loads in the plane of the beam and normal to its axis. In such tests it is recommended that the beam be simply supported at the lift truss fittings and subjected to equal concentrated loads, at or near the third points of the span, of such magnitude that the maximum shear and bending moment on the test specimen are in the same ratio as are the maximum primary shears and bending moments on the corresponding spans of the beam in the airplane. If this is not practicable, the shear on the test beam should be relatively larger than in the airplane. The deflections in the test should be read to the degree of precision necessary to obtain computed values of EI which are accurate within $\pm$ 5 per cent.

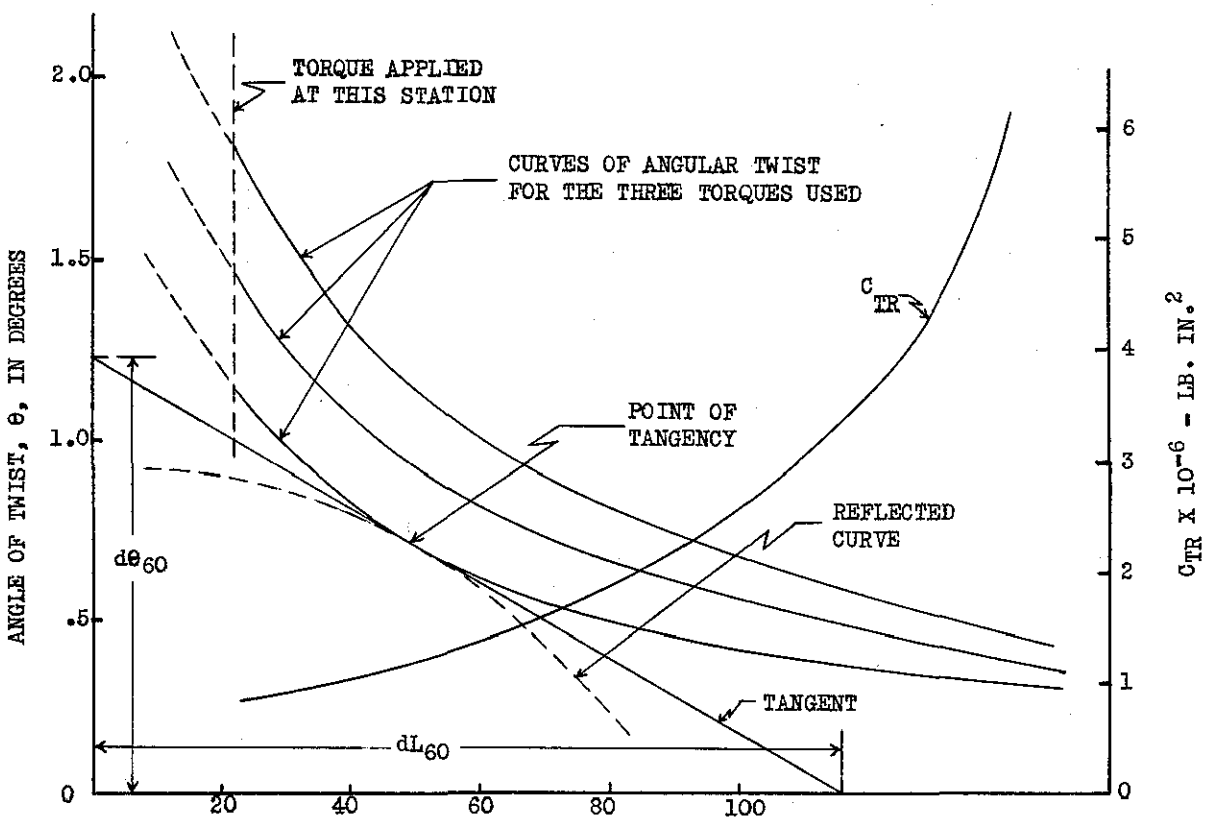

L - DISTANCE FROM WING TIP, INCHES

RECOMMENDED SCALES: L:1" = 20"
θ:1" = .1° TO .2°

FIG. 27b PLOT OF RESULTS OF TORSION TESTS

2. When such a test cannot be made, the value of EI may be computed from the geometrical properties of the section and the elastic properties of the material used, but before being used in the formulas for computing deflections, shears, or secondary bending moments, this value should be multiplied by a correction factor to allow for shear deformation, play in joints, and lack of precision in computing the geometric properties of irregular sections. The correction factors recommended are 0.95 for beams having continuous webs that are integral with the chords, extruded I, and similar beams; 0.85 for built-up plate girders having continuous webs connected to the chord by riveting; 0.75 for beams with webs having lightening holes of such shape that the beam cannot be analyzed as a truss.

C TRUSS-TYPE METAL SPARS

1. Metal truss spars, in which the axial load is so small that L/j (or equivalent symbol as used in the formulas for computing the stresses in beams subjected to combined loadings) is less than unity, may be analyzed as pin-jointed structures if the axes of the members meeting at each joint intersect at a point. When the axes of the members meeting at any joint do not intersect at a single point, the figure formed with the axes of the members as its sides may be called the "eccentricity pattern" of the joint. In these cases the axial loads in the actual truss members may be assumed to be the same as those in the members of an equivalent truss with the joints located anywhere on that side of the eccentricity pattern formed by the axis of the chord member. When there is an eccentricity pattern at the end of any truss member, the load on that member applied through that joint may be assumed to be composed of an axial load P, computed as described above, and a bending moment equal to Pe, where e is the normal distance from the axis of the member to the most distant corner of the eccentricity pattern. A more rational analysis can be made by dividing the total eccentric moment (about the true intersection of the web members) between the members intersecting at the joint in proportion to their relative resistance to rotation of the joint.

2. In metal truss spars, for which L/j is greater than unity, the bending moments and shears on the spar should be obtained by the use of the precise formulas. The values of EI to be used in these formulas should be obtained whenever possible from deflection tests of the type described in 04.311-B1. When tests are not practicable the deflections used for determining EI may be obtained by the use of any of the standard methods of computing the deflections of a truss, the assumed loading being that which would be used in a test. In computing these deflections it should be assumed that there is from 0.005 to 0.010 inch slip in the joint at each end of each web member of a riveted or bolted truss. No slip need be assumed in welded joints. Whether the deflections are obtained by test or are computed, EI values should be obtained for at least three points in each span of the truss and the average used in the precise formulas. When an external load parallel to the axis of the spar is applied at any section at a point other than the centroid of the chords at that section considered as a unit, it should be treated in the precise formulas as an equivalent combination of an axial load at that centroid and a bending moment.

3. The loads in the chord members at any section should be computed from $F = PA_c/A \pm M/h$, where P is the total axial load, A_c the area of the chord under consideration, A the sum of the areas of the chords without allowance for rivet holes, M the total bending moment from the precise formulas, and h

the distance between the centroids of the chords. Where the axis of the spar is not straight between support joints, M should be increased or decreased by Pe, e being the distance on the unloaded truss from the centroid of the chords, considered as a unit at the section under investigation, to a line joining the similar centroids at the support sections. When full scale tests are not practicable, the loads in the web members should be computed from $F = S/\sin \theta$, where θ is the angle between the web member and the axis of the spar and S is the derivative of the total bending moment with respect to x. If the chords are not parallel, S should be corrected by an amount equal to the shear carried by the chords which are cut by the same section as is the web member. Where the chord members change section, the web members should be designed to carry an additional load the component of which, parallel to the spar axis, is equal to the part of the total axial load P that must be transferred from one chord to the other. Thus, if the area of the upper chord changes from 0.6 of the total chord area to 0.5 of the total chord area, the added load in the web members will be $0.1P/\cos \theta$. For simplicity, this load may be applied entirely to the web member adjacent to the change of section, when such procedure is conservative for that member.

4. Design of Chord Members. The column length should be assumed as the center-line distance between truss joints for bending in the plane of the truss, using a restraint coefficient of not more than 2.0. For bending laterally it should be assumed as the distance between drag struts except that:

a. If the ribs have adequate strength to prevent lateral buckling the distance may be taken as not less than one-half the distance between drag struts.
b. If the wing covering is metal, suitably stiffened, the bending laterally may be neglected.

5. Design of Web Members. When there are no eccentricity patterns and the centroid of the rivet group is on the axis of the member, the column length may be assumed to be equal to the center line length of the member. The restraint coefficient used will depend on the type of joint employed but should in no case exceed 2.0. When eccentricity patterns exist or when the centroid of the rivet group is eccentric to the axis of a member, such member should be considered as an eccentrically loaded column of length equal to its true centerline length, the assumed eccentricity of the axial load at each end being taken as the arithmetical sum of the rivet group eccentricity and the distance from the axis of the member to the most distant corner of the eccentricity pattern. When a more exact method of analysis is employed, each member should be analyzed for the proper combination of axial load and end moment.

D THIN-WEB METAL SPARS.

1. Thin-web metal spars may be analyzed in accordance with the theory of flat plate metal girders, under the assumption that diagonal tension fields will be produced by the shear forces. For information on this subject see NACA Technical Note No. 469. The analysis should cover the attachment of the web to the flanges.

E STRESSED-SKIN WINGS.

1. Plywood Covered Wings. Wings that are completely covered with plywood may be designed under the following assumptions:

a. The covering will carry the shear due to the chord components of the external loads, provided that suitable compression members are installed between the spars, and that cut-outs are properly reenforced. The axial loads in the spars due to chord loads should not be neglected in the spar analysis.

b. If the loads on the spars are computed by means of conventional methods, without reference to the elastic characteristics of the entire structure, it may be assumed that plywood covering, if rigidly attached to the spars and ribs throughout their entire length, will carry 10 per cent of the moments of the wing due to the beam components of the air loads. The spars should be designed to carry at least 90 per cent of these moments. When such covering is removable or contains large openings or other discontinuities between the spars on either surface of the wing, proper reduction in assumed strength of the covering adjacent to such opening should be made. No reduction should be made in the shear loads to be carried by the spars.

2. Metal-Covered Wings. Because of the lack of uniformity in the types of metal-covered wings in general use, it is recommended that extensive static testing be employed either in lieu of, or in conjunction with, stress analysis methods. In many cases a proof test to the specified limit load is the only method by which the behavior of the metal covering can be determined. The following points should be considered in investigating the strength of metal covered wings:

a. Methods of analysis involving the use of the elastic axis of the wing are acceptable if the position of the elastic axis is definitely known. It is usually advisable to eliminate any uncertainty in this respect by assuming different positions for the elastic axis, thereby covering a range in which it is certain to lie.
b. Analyses of skin-stressed wings involving the strength of sheet and stiffener combinations, or the strength of thin-web girders, should be supplemented by data on at least one static test of a representative panel in which the design conditions are closely simulated. Such a panel should be relatively large in order to account for the interaction of various parts of the structure.

.3110 SECONDARY BENDING

1. In the design of wing spars and other members subjected to combined axial and transverse loading the effects of secondary bending can be accounted for by the "precise" equations based on the equation of the elastic axis. In order to maintain the required factor of safety, it is necessary to base such computations on ultimate loads, rather than on the limit loads.

.3111 LATERAL BUCKLING.

1. For conventional wings, the strength of the beams against lateral buckling may be determined by considering the sum of the axial loads in both spars to be resisted by the spars acting together. The total allowable column strength of

both spars is the sum of the column strengths of each spar acting as a pin-ended column the length of a drag bay. Fabric wing covering may be assumed to increase the total allowable column strength, as above determined, by 50 per cent. When further stiffened by plywood or metal leading edge covering extending over both surfaces forward of the front spar a total increase in allowable column strength of 200 per cent may be assumed.

.313 RIBS

A TEST REQUIREMENTS.

1. The rib tests requiredshould at least cover the positive high angle of attack condition (Condition I) and a medium angle of attack condition. The total load to be carried by each rib should equal 125 per cent of the ultimate load over the area supported by the rib. For the medium angle of attack condition, the load factor should be taken as the average of the ultimate load factors for conditions I and III.

2. The leading edge portion of the rib may be very severly loaded in conditions II and IV. An investigation of the maximum down loads on this portion should be made when V_g exceeds 200 mph. (See CAM 04.217-B2). When this requirement does not apply, it should be demonstrated that the rib structure ahead of the front spar is strong enough to withstand its portion of the test load acting in the reverse direction. A test for this condition will be required in the case of a rib which appears to be weak.

3. No less than two ribs should be tested in either loading condition. For tapered wings a sufficient number of ribs should be tested to show that all ribs are satisfactory.

B TEST LOADINGS.

1. The following loadings are acceptable for two-spar construction when the rib forms a complete truss between the leading and trailing edges. (See CAM 04.217-B1 for other cases.)

a. For the high angle of attack condition ribs having a chord length greater than 60 inches should be subjected to 16 equal loads so arranged as to be applied at 1.0, 3.0, 5.0, 7.3, 9.9, 12.9, 16.2, 19.9, 24.1, 28.9, 34.2, 40.4, 47.5, 56.5, 72.0 and 90 per cent of the chord. The sum of these loads should equal the total load carried by the rib, computed as specified in CAM 04.313-A1. For ribs having a chord of less than 60 inches, 8 equal loads may be used, their arrangement being such as to produce shears and moments of the same magnitude as would be produced by the application of 16 equal loads at the locations specified above.

b. For the medium angle of attack condition 16 equal loads should be used on ribs of chord greater than 60 inches, 8 equal loads for chords less than 60 inches. In either case the total load shall be computed as specified in CAM 04.313-A1. When 16 loads are used, they shall be applied at 8.34, 15.22, 19.74, 23.36, 26.60, 29.86, 33.28, 36.90, 40.72, 44.76, 49.22, 54.08, 59.50, 65.80, 73.54 and 85.70 per cent of the chord. When 8 loads are used they shall be so arranged as to give comparable results.

301230 O—41——8

2. When the lacing cord for attaching the fabric passes entirely around the rib, all of the load should be applied on the bottom chord.

3. When the covering is to be attached separately to the two chords of the rib, the loading specified in paragraph 1 of this section should be modified so that approximately 75 per cent of the ultimate load is on the top chord and 50 per cent on the bottom, the total load being 125 per cent of the ultimate load.

.32 PROOF OF TAIL AND CONTROL SURFACES.

1. In analyzing movable control surfaces supported at several hinge points, care should be taken in the use of the "three-moment" equation. In general, the assumption that the points of support lie in a straight line will give misleading results. When possible, the effects of the deflection of the points of support should be approximated in the analysis.

.321 1. The effects of initial rigging loads on the final internal loads are difficult to predict, but in certain cases may be serious enough to warrant some investigation. In this connection, methods based on least work or deflection theory offer the only exact solution. Approximate methods, however, are satisfactory if based on rational assumptions. As an example, if a certain counter wire will not become slack before the ultimate load is reached, the analysis can be conducted by assuming that the wire is replaced by a force acting in addition to the external air forces. The residual load from the counter-wire can be assumed to be a certain percentage of the rated load and will of course be less than the initial rigging load.

.323 VIBRATION TESTS

1. The required vibration tests may be made by shaking the various units of the airplane by means of an unbalanced rotating weight driven through a flexible shaft at speeds which can be controlled and measured, or by other acceptable methods. These tests should be made on a complete airplane. The frequencies obtained for the various units should be entered in Form ACA-719 - Flutter Control Data. (A reproduction of this form to approximately 1/2 scale is shown as Table Vb on the following page.) Copies of this form may be obtained from the offices mentioned in paragraph 2 below.

2. Vibration equipment is available at the Civil Aeronautics Administration offices at LaGuardia Field, Long Island; Kansas City, Missouri, and Santa Monica, California. Loan of this equipment may be obtained by contacting the Regional Manager. It is especially important that the manufacturer pay particular attention to the instructions furnished with the above vibration equipment, in order that satisfactory results may be obtained. However, the manufacturer may use other types of vibration equipment, in which case a report should be submitted containing a complete description of the equipment and sufficient test data to substantiate its accuracy. When a resilient element such as a spring or rubber ball is incorporated in the driving unit of the vibrator, its stiffness should be low relative to the stiffness of the surface being vibrated, in order to avoid misleading results. If the manufacturer desires, arrangements can be made to obtain experienced Civil Aeronautics Administration personnel to supervise the operation of the vibration equipment.

TABLE V_b

Form ACA-719

DATE OF TEST: _____ EQUIPMENT: _____

USE INK OR HEAVY PENCIL LINE AND ENTER DATA IN LEGIBLE FORM.

FLUTTER CONTROL DATA (k)

INDICATED DIVE SPEEDS
RESTOP: ___ m.p.h.
TESTED: ___ m.p.h.

MODEL: _____

TEST ENGINEER: _____

SERIAL NO.: _____

SURFACE		ACTUAL WT. OF SURFACE AND BALANCE LBS.	SEMI-SPAN LENGTH OF SURFACE FT.	CHORD at 3/4 semi-span FT.	AREA SQ. FT. (a)	BALANCE AREA (b)	CABLE TORSION & TEMP. LBS. & DEGREES F	OTHER TYPE OF CONTROL SYSTEM	ELASTIC AXIS % CHORD	C.G. % BALANCE % CHORD FROM L.E.	STATIC UNBALANCE Positive when aft of hinge line (+) Negative when forward of hinge line (-) Inch-lbs.	X STATE AXIS (h) ⊥	X STATE AXIS (h) ∥	K/I ⊥ State Axis	K/I ∥ State Axis	VIBRATION TEST DATA FREQUENCIES STRUCTURE BENDING C.P.M. 1	STRUCTURE TORSION C.P.M.	CONTROL SYSTEM SYMMETRICAL (j) C.P.M. 3	CONTROL SYSTEM ANTI. C.P.M. 4	SIZE & PITCH OF ATTACH	SKETCH NO. (g)	REMARKS
A AILERON	Left																				
	Right																				
B WING	Left	(c)								(i)					(e)	(f)					
	Right																				
C RUDDER																					
D FIN																					
X FUSELAGE															V						
															S						
F ELEVATOR	Left																				
	Right																				
G STABILIZER																	R				
H TAB-AILERON	TRIM SERVO											(d)									
I TAB-RUDDER	TRIM SERVO																				
J TAB-ELEVATOR	TRIM SERVO											(d)									
K FLAP																					

FREQUENCY (l) RATIOS

- RUDDER / FUSELAGE TORSION = C5 / R2 = { }
- RUDDER / FUSELAGE SIDE BENDING = C5 / R1 = { }
- RUDDER / FIN BENDING = C3 / F1 = { }
- * RUDDERS / STAB. BENDING = C3 / G1 = { }
- * RUDDERS / STAB. MOOR. ATTACH. = C4 / G2 = { }
- * RUDDERS / FIN BENDING = C4 / F1 = { }
- ELEVATOR SYM. / FUSELAGE VERTICAL BEND. = F3 / R1V = { }
- ELEVATOR SYM. / STABILIZER BENDING = F5 / G1 = { }
- ELEVATOR SYMTR. / FUSELAGE TORSION = F4 / R2 = { }
- AILERONS / WING BENDING = A3 / B1 = { }
- AILERONS / WING TORSION = A3 / B2 = { }
- WING BENDING / WING TORSION = B1 / B2 = { }
- STABILIZER BENDING / STABILIZER TORSION = G1 / G2 = { }

* only for rudders not in the plane of symmetry.

NOTES:

(a) Area of: (1) Aileron, (1) Rudder, (1) Flap, (1/2) Total Wing (Including Aileron and Flaps), (1/2) Total Stabilizer, (1/2) Total Elevator.
(b) All area forward of Hinge line.
(c) Estimated unit weight at 3/4 semi-span location.
(d) Not required if irreversible mechanism is used and tab frequency is greater than 1500 c.p.s.
(e) Include secondary mode for large aircraft, also unsymmetrical modes.
(f) For bi-planes include cellule torsion frequency.
(g) Show nodal lines, amplitudes, and vibration exciter location.
(h) Use axes given in CAM 04, or base upon vibration tests.
(i) C.G. location at 3/4 semi-span location. In percent of chord.

(j) Symmetrical - Both Ailerons down (or up).
- Rudder - Twin
Rudder Trailing Edges both in (or both out)
- Elevators - Both Halves down (or up).

(k) See CAM 04 for details.

(l) In coded fractions shown in Frequency Ratio column, letters refer to SURFACE line, numbers refer to FREQUENCIES column, thus C5 is Rudder symmetrical (control system) .
R2 Fuselage torsion

V = VERTICAL BENDING
S = SIDE BENDING
R = STAB. MOORING ABOUT ATTACHMENT

3. Attitude of Aircraft. All of the vibration tests, with the exception of the fuselage vertical bending and possibly the fuselage side bending tests, can be conducted with the airplane tail wheel (or skid) resting on the ground, providing that the natural frequencies of the various units may be correctly recognized with the airplane in this position. It has been found desirable, in some cases, to deflate the landing gear tires (and tail wheel tire, if used) approximately 25%, in order to lower the natural frequency of the tires below the frequency range expected for the structure. If difficulty is experienced in recognizing the significant frequencies with the tail wheel (or skid) on the ground, it should be raised just free from the ground, either by a sling around the fuselage located as far forward as is practical, or by blocking up in the region of the wings. The latter procedure may be preferable for the fuselage vertical and side bending modes.

4. Location of Vibrator on the Structure.

a. The proper location of the vibrator on the structure is important in obtaining satisfactory results. Suggested vibrator locations for exciting various modes of vibration are given in Fig. 28 .

b. The effect of the vibrator weight on the frequency of the structure may be appreciable especially for the control surfaces. The lightest weight vibrator giving satisfactory results should be used. In general, vibrators weighing up to 10% of the weight of the surface to which they are attached may be used without correcting the observed frequencies, unless the vibrator distance from the hinge line is such as to create a much larger relative effect upon the moment of inertia of the surface. However, approximate frequency corrections can be made by adding several small increments of weight near the vibrator at the same arm from the hinge line as the vibrator, and plotting the resulting total increment weights (including vibrator weight) against the frequencies observed. Extrapolating this curve to zero weight should give the corrected frequency.

c. In general, the following points should be considered in the attachment of any type of vibrator to a structure.

(1) The location is of primary importance and should be at a point of large deflection. See Fig. 28

(2) The vibrator should be so mounted that its line of force will be in the most advantageous direction to excite the vibration mode desired.

(3) It is desirable to attach the vibrator to a part of the structure that is fairly rigid such as the wing spar, control surface ribs, etc.

(4) The local structure to which the vibrator is attached should have adequate strength for the loads imposed by the vibrator.

VIBRATION MODES AND VIBRATOR LOCATION

(IN GENERAL ONLY A FRACTION OF THE MODES LISTED WILL BE APPLICABLE TO ANY ONE AIRPLANE)

ITEM	SURFACE	MODE	DESCRIPTION OF MODE AND SUGGESTED VIBRATOR LOCATION
1	Rudder (Single)	(As a Unit)	Rudder swinging back and forth, under the spring action of the control cables. (Vibrator aft of horn on rudder T.E.)
2	Rudder (Single)	Torsion	Torsional vibration of the rudder, under the spring action of the torque tube (Nodal line extends from trailing edge to torque tube.) (Vibrator near upper end on rudder T.E.)
3	Rudders (Twin Tail)	Sym.	Same as item 1 above, except both rudders swinging inward (or outward) at same time. (Vibrator aft of horn on rudder T.E.)
4	Rudders (Twin Tail)	Unsym.	Same as item 1 above, except both rudders moving to right (or left) together. (Vibrator aft of horn on rudder T.E.)
5	Rudders (Twin Tail)	Torsion	Same as item 2 above.
6	Elevator	Sym.	Both elevators swinging up or down together under the spring action of the control cables (or push pull tubes) (Vibrator at inner end of one elevator T.E. or aft of horn on single elevator.)
7	Elevator	Unsym.	One elevator (or 1/2 of single elevator) moving up, other down at same time under spring action of torque tube. (Nodal line in plane of surface, extending aft from point near center of elevator spar.) (Vibrator at center of semi-span near T.E.)
8	Aileron	Sym.	Each aileron as a unit swinging up and down together, under the spring action of the control cables (or push pull tubes). (Vibrator between center and inner end at aileron T.E.)
9	Aileron	Unsym.	One aileron as a unit moving up, other down at same time, under spring action of control cables. (Vibrator aft of horn at aileron T.E.)
10	Aileron	Torsion	Torsional vibration of aileron, under the spring action of the torque tube (Nodal line extends from trailing edge to torque tube.) (Vibrator near outer end at aileron T.E.)
11	Wing	Sym. Bending	Wing bending as a beam supported at its midpoint (fuselage), or as a braced beam supported at the brace points. (Vibrator near wing tip approximately on elastic axis of wing.)
12	Wing	Unsym. Bending	Same as item 11 above, except that right and left halves of the wing move in opposite directions at the same time. Usually only important in large multi-engine aircraft. (Vibrator near wing tip approximately on elastic axis of wing.)
13	Wing	Sym. Torsion	Torsional vibration of the wing about a spanwise axis. Right and left halves of the wing move in same direction about this axis at the same time. (Vibrator near wing tip, forward or aft of elastic axis of wing.)
14	Wing	Unsym. Torsion	Same as 13 above, except right and left halves of the wing move in opposite directions about a spanwise axis at the same time. (Vibrator near wing tip, forward or aft of elastic axis of wing.)
15	Wing (Biplane only)	Cellule Sym. Torsion	Same as item 13 above, except center of rotation may be located between upper and lower wings. (Vibrator acting in chordwise direction at upper wing outer rear interplane strut attachment.)
16	Wing (Biplane only)	Cellule Unsym. Torsion	Same as item 14 above, except center of rotation may be located between upper and lower wings. (Vibrator acting in chordwise direction at upper wing outer rear interplane strut attachment.)
17	Fuselage	Torsion	Whole tail unit and fuselage vibrating torsionally about longitudinal axis. (See item 23 also) (Vibrator on fin or stabilizer - on hinge line, at tip of surface.)
18	Fuselage	Side Bending	Whole tail unit vibrating in side direction about vertical axis through fuselage forward of tail unit. Usually important only on large airplanes. (Vibrator at tail end of fuselage.)
19	Fuselage	Vertical Bending	Same as item 18 above, except vibrating in vertical direction about horizontal axis through fuselage. Only important in very large aircraft having fuselage cutouts in top and bottom sides. (Vibrator at tail end of fuselage.)
20	Stabilizer	Sym. Bending	Stabilizer bending as a beam supported at its midpoint (fuselage). Usually only important in cantilever tail surface designs. If wire or strut braced with small tip overhang, the mode of vibration may not be such as to permit interaction with the elevator. (Vibrator near outboard end of stabilizer.)
21	Stabilizer	Sym. Torsion	Torsional vibration of the stabilizer. Similar to item 13, for the wing. Usually only important for cantilever and twin tail aircraft. (Vibrator near outer end of stabilizer at L.E.)
22	Stabilizer	Unsym. Torsion	Torsional vibration of stabilizer. Similar to item 14 for the wing. Nodal line at ℄ of stabilizer (fuselage). (Vibrator at leading edge of stabilizer or at trailing edge of elevator. Elevator clamped to stabilizer.)
23	Stabilizer	Rocking about its fuselage attachments	See item 17 also. Stabilizer as a unit rocking about its fuselage attachments. Usually only important for twin tail aircraft. (Vibrator on fin or outboard end of stabilizer on twin tail aircraft, or near outboard end of stabilizer - elevator hinge line on single tail aircraft.)
24	Fin (Single tail)	Bending	Fin bending as a beam fixed at one end. Usually only important in cantilever tail surface designs. (Vibrator near upper end of fin near rudder hinge line.)
25	Fin (Single tail)	Torsion	Torsional vibration of the fin. Similar to item 21 for the stabilizer. (Vibrator on fin L.E. near upper end.)
26	Fin (Twin Tail only)	Bending (Sym. with respect to attaching fin to stabilizer	Fin bending as a beam fixed at its attachment to stabilizer. (Vibrator near upper, or lower, end of fin near elastic axis of fin.) (Upper and lower portions may have different frequencies.)
27	Fin (Twin Tail only)	Bending (Unsym. with respect to attachment of fin to stabilizer)	Fin bending as a beam fixed at its attachment to stabilizer.
28	Flap	Torsion	Torsional vibration of outboard end of flap. Similar to item 10 above. Assuming irreversible control arm used. (Vibrator near outboard end of flap on T.E.) Only important when flap extends outboard on wing beyond 50% semi-span location.
29	Tabs (Rudder Aileron Elevator)		Note: Effect of vibrator weight on tab frequency should be investigated when vibrator is attached directly to tab.
30	Trim or Balance Tabs	Torsion	Torsional vibration of the tab under the spring action of the torque tube. Node on T.E. (Vibrator on tab near one end.)
31	Servo Tabs	Sym.	Tab as a unit swinging back and forth under the spring action of the control cables. (Vibrator on adjacent tab supporting structure, or on tab itself.)
32	Servo Tabs	Torsion	Same as item 10 above. (Vibrator on tab near one end.)
33	Balance Weights for movable surfaces - mounted on long supports	Bending of support	Support bending as a beam (fixed at one end) in various planes depending on the rigidity. Most important directions are vertical and sideways with relation to the airplane centerline. (Vibrator near balance weight support.)

FIG. 28

REVISED 9-40

5. Testing. A certain amount of experience is necessary in recognizing the various modes and resonant frequencies. In conducting the tests, the vibrator should be placed on the structure as suggested and then operated at increasing speeds until a response peak is reached (the amplitude of vibration of the structure is appreciably greater than at slightly higher or lower speeds, thus indicating a resonant condition).

6. During the vibration tests involving the control system, the controls should be restrained by an assistant to simulate the condition in flight. When the control system incorporates dampers or power boosters, their effect on the frequencies should be considered. It is important that cable control systems be rigged to their proper tension. In general it will be found that cable control systems will have a larger resonant frequency response range than a more rigid system, such as one incorporating push pull tubes with close fitting joints. In the former case, when an unusually large range is encountered, it is desirable to record the frequencies at both ends of the response range. In most cases it is satisfactory to note only the mean frequency value for the particular mode.

7. It should be noted that it may be possible to excite a certain mode in more than one way. For instance, the fuselage torsional frequency may be excited in the fin bending test and conversely the fin bending frequency may be excited in the fuselage torsion test. Cases of this type will serve as cross checks on each other.

The phase relationship of vibrating parts may be determined by the method shown in Fig. 28a as applied to the particular case of the elevators. The metal plates A and B, attached to the trailing edges of the elevators and interconnected with a wire, are necessary only in the case of fabric covered surfaces or surfaces which have a poor electrical interconnection. When the parts are vibrating the phase relationship may be determined by manually holding the leads C and D close to the surfaces so that intermittent contact is made during each cycle. If the light flashes or clicks are heard in the headphones at regular intervals (with the contacts in the same side; i.e., upper or lower), the surfaces are vibrating in phase, whereas, if the light does not flash, or no click is heard in the headphones, the surfaces are out of phase. This should be verified by reversing one contact, for example, putting contact D on the upper side.

The location of the nodes of the various forms of vibration should be established by the tests. In many cases the location of the nodes is self-evident, or can be determined by visual observation or by "feel". Determination of the nodes by the foregoing methods is generally satisfactory for most modes of vibration. If the torsional axis of vibration of the fuselage (or the nodes for other modes of vibration) cannot be definitely established by the above methods, a more detailed procedure, involving measurements of the amplitudes of vibration at various points, should be employed.

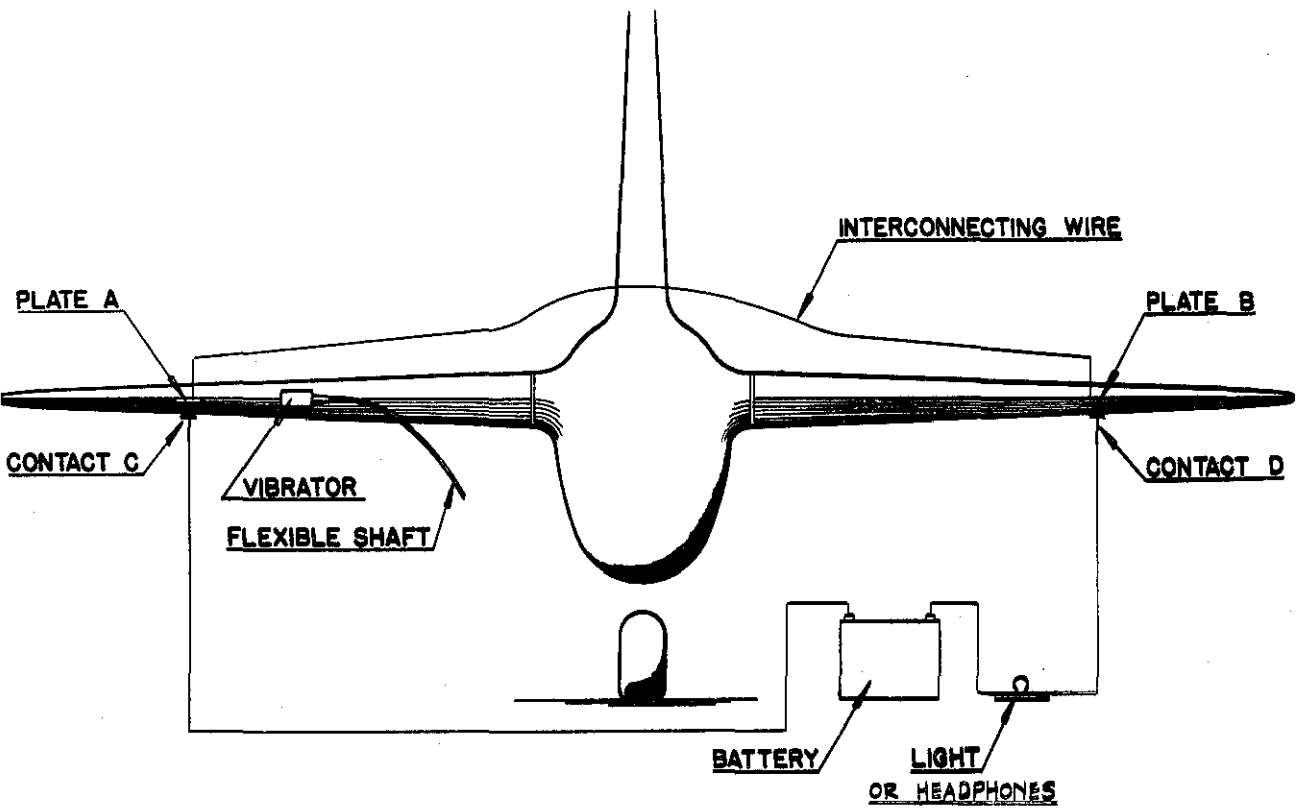

REF. CAM 04.323-7

FIG. 28A TEST SET-UP FOR DETERMINATION OF PHASE RELATIONSHIP.

9-40

8. A number of frequency trend curves are shown in Figure 28b. These will be expanded as more data become available. The wing and stabilizer data shown on this figure were obtained on unbraced surfaces. It should be appreciated that these trends are approximate and can serve as a rough guide only. Many factors, such as the type of construction involved, etc., will have a marked influence on the actual values which will be obtained for any particular design.

9. Fig. 28 gives a detailed description of the possible modes that may be observed during the tests and includes suggested vibrator locations for each mode. In general, only a fraction of the modes listed will be applicable to any one airplane.

.33 PROOF OF CONTROL SYSTEMS.

1. In some cases involving special leverage or gearing arrangements, the critical loading on the control system may not occur when the surface is fully deflected. For example, in the case of wing flaps the most critical load on the control system may be that corresponding to a relatively small flap displacement even after proper allowance is made for the change in hinge moment. This condition will occur when the mechanical advantage of the system becomes small at small flap deflections.

2. An investigation of the strength of a control system includes that of the various fittings and brackets used for support. In particular, the rigidity of the supporting structure is important especially in aileron, wingflap, and tab control systems.

.34 PROOF OF LANDING GEAR.

1. The landing conditions tabulated in Figs. 24 and 25 are chosen so as to cover the various possible types of landings with a minimum amount of investigation. It will usually be found that each different condition is critical for certain different members. If the design is such that it is obvious that a certain condition cannot be critical for any member, such a condition need not be investigated. It will probably be necessary, however, to determine the loads acting on the fuselage in all conditions, for use in the fuselage analysis.

2. In order to simplify the procedure used in analyzing landing gear and float bracing it is recommended that the following conventions be used:

a. The basic reference axes are designated by V (positive upward), D, (positive rearward) and H (positive outward). (For side landing conditions H will be positive outward only with respect to one side.
b. Tension loads are positive, compression loads negative.
c. Moments are represented by vectors according to the "right hand" rule.
d. The basic axes also represent positive moment vectors, each axis being the axis of rotation for the corresponding moment. (Note that changing the sign of a moment reverses the direction of the vector.)
e. In writing the equations of equilibrium, all forces are initially assumed to be tension, i.e., positive. The true nature of the forces will be indicated by the sign of the vector obtained in the final solution.
f. Moments can be combined vectorially in exactly the same manner as forces and can also be solved for by the same methods.

NATURAL FREQUENCY TRENDS

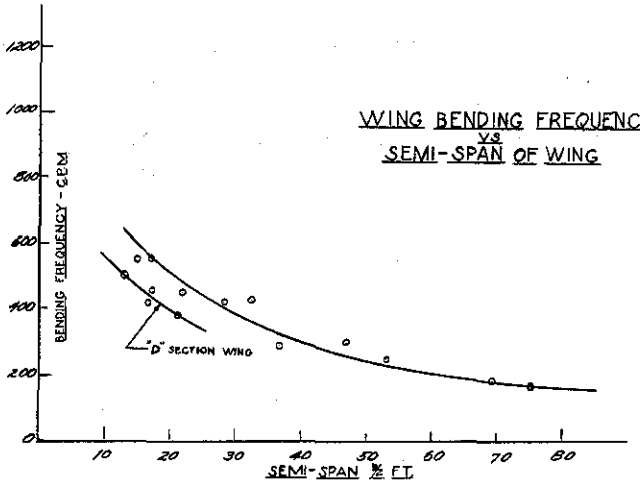

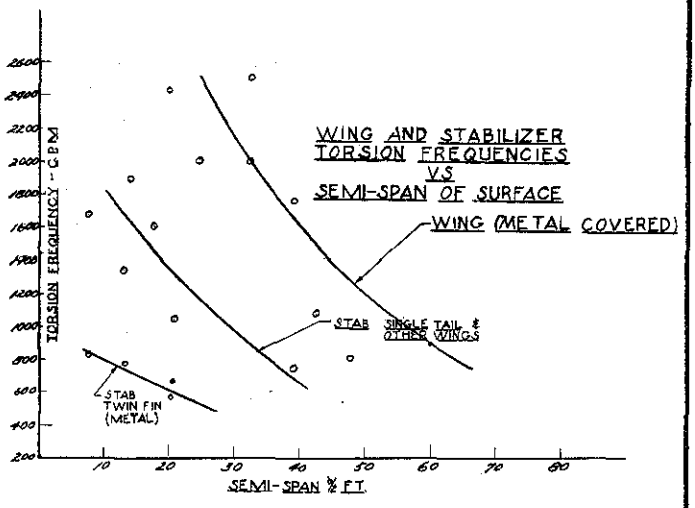

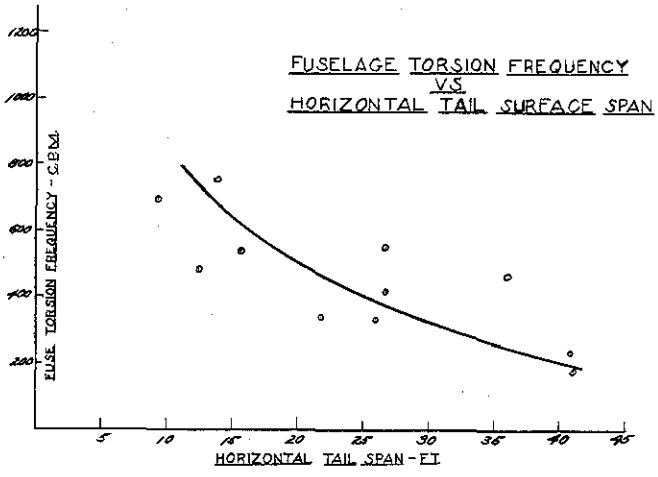

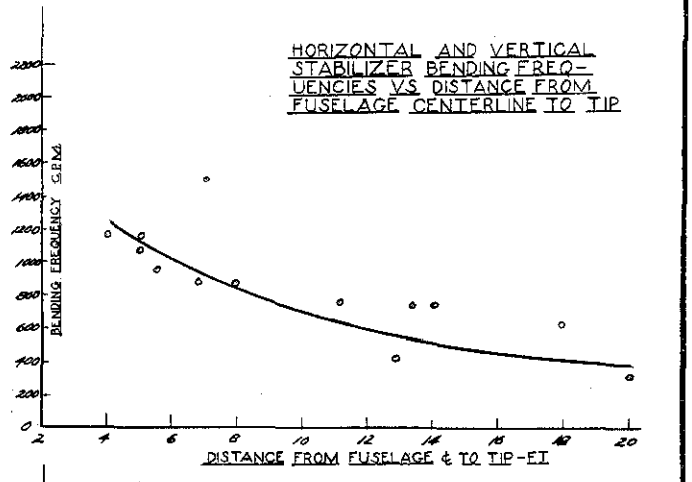

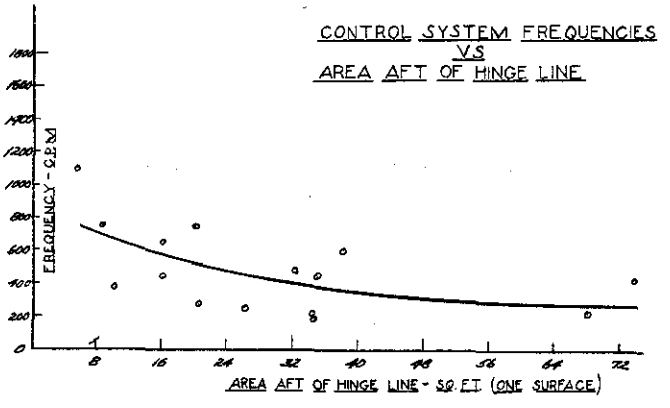

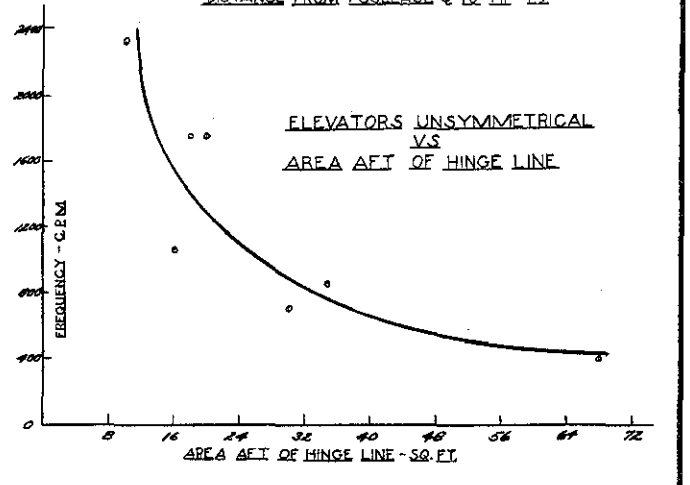

REVISED 9-40

FIG. 28b

.340 ENERGY ABSORPTION TESTS.

A GENERAL.

1. As stated in CAR 04.440 the shock-absorbing system must so limit the acceleration in specified drop tests (CAR 04.2411 and CAR 04.2420) that the ultimate load used in the design of any member is not exceeded. In general this is interpreted to mean that the acceleration recorded in drop tests should not exceed the ultimate load factor for the condition being tested. In infrequent cases the ultimate load factor is exceeded in a drop test but, due to margins of safety, the ultimate strength of any member is not exceeded. In such cases the true margins should be listed in the analysis. Drop tests alone from the required height are not acceptable as proof of strength. Any yielding of structural components in drop tests will be subject to review and further consideration.

2. Many cases arise which involve approval of a higher gross weight, the necessary greater height of drop, and/or the use of different tires from those used in the original drop test. In some such cases it may be possible to demonstrate compliance with the requirements without an additional drop test. In general, however, time and expense will be saved if such changes are anticipated and substantiated at the time of the original drop test.

3. In the drop test it is acceptable to allow for the effect of wing lift present in the landing maneuver only when such effect is substantiated, i.e.. when a completely rational analysis of the problem is made.

B MAIN GEAR TESTS - FIRST METHOD

1. The first method of testing involves dropping the fuselage or equivalent structure with the complete landing gear attached. A beam with the proper location of landing gear fittings may be considered as equivalent structure. Tests should be made for either the three-point or level landing condition, whichever is critical with respect to energy absorption, i.e., whichever (in the case of conventional gear) involves a smaller component of wheel travel (relative to the airplane) in the direction of the resultant external force. See E below for considerations in the case of nose wheel type gear. However, tests should also be made for the other condition if it involves higher bending loads in the shock absorber than does the critical condition.

2. For the three-point landing test the rear end of the fuselage is held in place on the floor as shown in Fig. 29. For the level landing test the rear end of the fuselage is raised until the center of gravity of the loaded airplane is vertically above the wheel axles, or until the fuselage is inclined at a nose-down angle of 14 degrees, whichever is reached first. The rear end of the fuselage is then held in this position, as shown in Fig. 29. Care should be taken, particularly in the level landing drop test, to restrain the rear end of the fuselage from rising as a result of the impact. When the airplane is in position for the drop it is advisable to place sand bags under the structure near the CG to minimize the damage in case of failure.

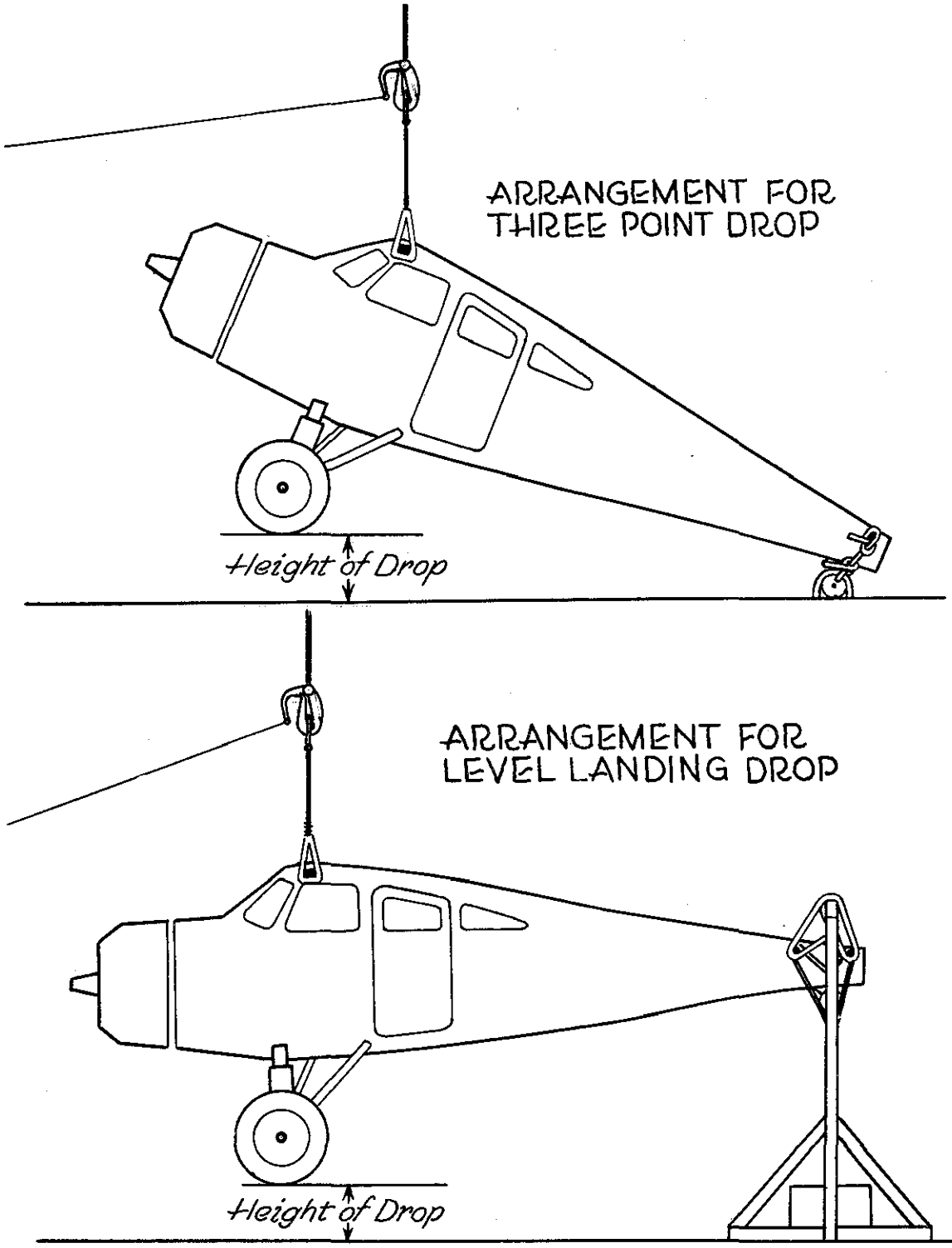

(Ref. CAM 04.340-B)

FIG. 29 SET-UP FOR LANDING GEAR DROP TEST

3. The accelerations should be obtained by use of a recording accelerometer, a space-time recorder, or other suitable means attached or connected as close to the CG as possible. The NACA has a number of accelerometers which are approved for this purpose and will lend them to manufacturers on request. In this connection it should be noted that when accelerometers are used they should have a very short natural period, i.e., 1/20 second or less. In general the use of a recording device in which a mass travels an appreciable distance will be questioned.

4. The following procedure should be observed in conducting the tests:

a. For tests in the level landing attitude the weight on the main wheels should be the full gross weight of the airplane. Note that this does not require that additional weight be used to duplicate the stress analysis resultant load which includes the vertical and aft components. In the three-point attitude the weight on the main wheels should be the static reaction for this attitude with the full gross weight at its most forward CG location.

b. The tire pressure should be the same as that recommended by the Tire and Rim Association for use in service. Likewise the proper fluid, fluid level and air pressure (if any) of the shock absorber should be used.

c. A hoisting sling with a quick-release mechanism is attached to the fuselage near the center of gravity. By means of this hoist the front end of the structure is raised until the tires are clear of the floor by the desired amount. When using the tape type space-time recorder it is desirable to mark the "static" and "clear" positions on the tape.

d. The floor, or a steel plate placed under the tires, may be greased if desired to prevent the tires from rolling off the rims if there is appreciable side movement of the wheels.

e. The quick-release is operated, allowing the structure to drop freely.

5. It is advisable that the drop height be increased by increments from some low value until the height specified in CAR 04.2411 is attained so that unsatisfactory characteristics can be detected before the gear is overstressed. Note that the specified height is measured from the bottom of the tire to the ground, with the landing gear extended to its extreme unloaded position.

6. The final test should be witnessed by a representative of the Administrator. The manufacturer's report should include, in addition to other data (see CAM 04.032-A), the accelerometer records or exact copies of them, with the magnitude of the maximum acceleration determined and marked thereon. A record of the maximum tire deflection should also be given.

C MAIN GEAR TESTS - SECOND METHOD

1. The second method of testing involves dropping the shock absorption unit, including wheel and tire assembly, in a special test rig. When using this method it is strongly recommended that the actual linkage ratios (wheel travel to shock absorber travel) be duplicated, and that bending in the shock absorber member (if present in service) be simulated in the test. When this is impracticable it will be acceptable to use the "in line" method (wheel, shock-absorber and load in line) outlined below provided that the following points are observed:

a. Prior to final tests the proposed test procedure should be submitted to the Administrator for ruling as to its acceptability.

b. Drops should be made from several different heights in order to establish the trend in accelerations.

c. The "in line" method is not recommended when the values of K (see 2a below) exceeds 1.75.

d. A margin between the developed acceleration and the ultimate load factor, proportional to the degree of bending present in service and the pertinent value of K, should be shown.

2. The following procedure should be observed in setting up for "in line" drop test:

a. Determine the value of K (ratio of the static load on the strut to the static load on the tire) for the critical condition being simulated in the test (See B above and E below for considerations involved).

b. Use a test weight equal to K times the static load on the tire. Of this test weight, the "unsprung" or "semi-sprung" portion of the jig weight, i.e., that portion of the jig weight which moves with the wheel, should be held to the minimum practicable.

c. Replace the original tire with a tire having a load deflection curve each ordinate (load) of which is K times the original value and each abscissa (deflection) of which is approximately 1/K times the original value, the original values being those for the tire actually used. In addition, the maximum deflection of the test tire should be limited to 1/K times the maximum deflection of the original tire. It may be possible to obtain the above characteristics by changing the inflation pressure of the original tire and by using stops.

d. The height of free drop should be 1/K times the height specified.

e. The foregoing adjustments are necessary in order to reduce to a minimum the errors in impact energy, piston velocity, and shock strut load. Note that such errors increase with an increase in the value of K.

D TESTS OF TAIL WHEELS AND TAIL SKIDS.

1. Tests for the energy absorption capacity of the tail wheel assembly may be made in a manner similar to that used for testing a complete main gear assembly (See CAM 04.340-B), except that the tests need be made only for the three-point condition. The test load may be obtained by loading the fuselage or by concentrating the required mass over the tail wheel.

2. In conducting these tests the front wheels rest on the floor while the tail is raised the required distance (See CAR 04.2411) and dropped. The accelerometer or space-time recorder tape is attached to the structure at a point over the wheel. Drop tests of complete assemblies, or "in-line" drops made in test rigs (See CAM 04.34-C), are equally acceptable.

3. Tests for the energy absorption capacity of tail skids should be conducted in a manner similar to that outlined above for tail wheels .

E TESTS OF NOSE-WHEEL TYPE GEAR

1. In general, the tests of main wheel and nose wheel installations may be made in accordance with the methods outlined in A to C above. The tests of each installation should be made for the most critical (most unfavorable with respect to shock absorption) of the conditions outlined in CAM 04.240-2a through 2e. Each of these conditions is assumed to be produced by the free drop from the height specified in CAR 04.2411. In determining the critical conditions, consideration should be given to the value of the component of wheel travel (relative to the airplane) in the direction of the resultant external force and also to the magnitude of this force. In general, the higher the force and the smaller the travel, the more critical the condition. In cases where question arises as to the applicability of the design conditions used it is advisable to conduct actual landing and taxiing tests with one or more accelerometers installed in the airplane.

2. In all cases the proposed test procedure, together with details of the installation, should be submitted to the Administrator for comment prior to the tests.

F TESTS AT PROVISIONAL WEIGHT

1. When advantage is taken of the provisions of CAR 04.711 in designing the landing gear only for the standard weight, it is necessary to show that the airplane is capable of safely withstanding the ground shock loads incident to taxiing and taking-off at the provisional weight. This can be demonstrated by showing that the accelerations developed in taxiing and taking-off over rough ground (off runway)are such that the limit load for any landing gear member is not exceeded. The accelerations developed in these tests should be obtained by means of a recording accelerometer.

PROOF OF FUSELAGES AND ENGINE MOUNTS

A GENERAL

1. In addition to determining the loads in the main structural members of a fuselage, the local loads imposed by the internal weights which they support should not be overlooked. This applies particularly to members which serve both as a critical portion of the primary structure and as a means of support for some item of appreciable weight. Also, whenever critical, control system loads which occur in the specific flight or landing conditions should be combined with the primary loads. The combined stresses should be determined in such cases.

B STRESS ANALYSIS PROCEDURE

1. Weight Distribution. All major items of weight affecting the fuselage should be so distributed to convenient panel points that the true center of gravity of the fuselage and its contents is maintained. A suitable vertical division of loads should be included. The following rules should be followed in computing the panel point loads for conventional airplanes:

a. The weight of an item located between two adjacent panel points of the side trusses should be divided between those panel points in inverse proportion to the distance from them to the center of gravity of the item.

b. The weight of an item to the rear of the tail post or forward of the front structure should be represented in the table by a load and a horizontal couple at the tail post or front frame, as the case may be.

c. The weight of an item supported at three or more panel points should be divided between those points by the aid of an investigation and analysis of the method of support, if practicable. When a rational analysis is not possible, the division may be estimated.

d. In all cases the moment of the partial panel loads due to any item about an origin near the nose of the fuselage should be equal to the moment of the item about that origin.

e. All loads may be assumed to lie in the plane of symmetry and to be divided equally between the two vertical trusses of the fuselage.

2. Balancing (Symmetrical Conditions). Methods of balancing the airplane are discussed in CAM 04.218. It will, in general, be satisfactory to apply directly the balancing loads found in the various flight conditions. The acceleration factor applied to each item of mass in the fuselage will be the net acceleration factor as determined from the

balancing computations. The basic inertia force on any item will be parallel to the resultant external applied force and will not, in general, be perpendicular to the thrust line. In certain cases the chord components of the inertia forces (i.e., the components along the thrust line or fuselage centerline) can conveniently be combined into a single force applied at the nose of the fuselage. This procedure permits the use of vertical inertia loads but it should not be used unless it is obviously conservative for the critical fuselage members.

3. Balancing (Unsymmetrical Conditions). In any condition involving angular acceleration about a given axis, the inertia force applied to the structure by any item of weight is proportional to the mass or weight of the item and to its distance from the axis of rotation. Each angular inertia force will act in a direction perpendicular to the radius line between the item and the axis of rotation. In order to facilitate the analysis of a condition involving both linear and angular acceleration, the loads produced by the linear accelaration should be determined separately from those produced by angular accelearation. When unbalanced external loads are applied this involves the determination of the magnitude of the net resultant external load and its moment arm about the proper axis through the CG of the airplane. It will usually be acceptable, in analyses of this nature, to represent the weights of major items such as wing panels, nacelles, etc., by assumed concentrated masses at the centers of gravity of the respective items. Fig. 30 illustrates approximate methods by which the fuselage can be balanced for a typical unsymmetrical landing condition (one-wheel landing).

a. Fig. 30a shows a level landing condition in which the resultant load does not pass through the center of gravity. In such a case it will generally be acceptable to apply a balancing couple composed of a downward force acting near the nose of the fuselage and an equal upward force acting at the same distance to the rear of the center of gravity. These arbitrary forces can be considered as approximately representing angular inertia forces and they may be divided between the nearest panel points, if desired.

b. Fig. 30b indicates an acceptable method of balancing externally applied rolling moments about thelongitudinal axis. The forces resisting angular acceleration are assumed to be applied by the wing. The arbitrary location shown is based on the fact that the effectiveness of any item is proportional to its distance from the center of gravity. The balancing loads may be assumed to be vertical, although they actually act normal to a radius line through the center of gravity of the airplane. If nacelles or similar items of large weight are attached to the wing, the balancing couples can be divided between nacelles and wing panels in proportion to their effectiveness. This type of balancing applies also to side landing conditions, including those for seaplanes.

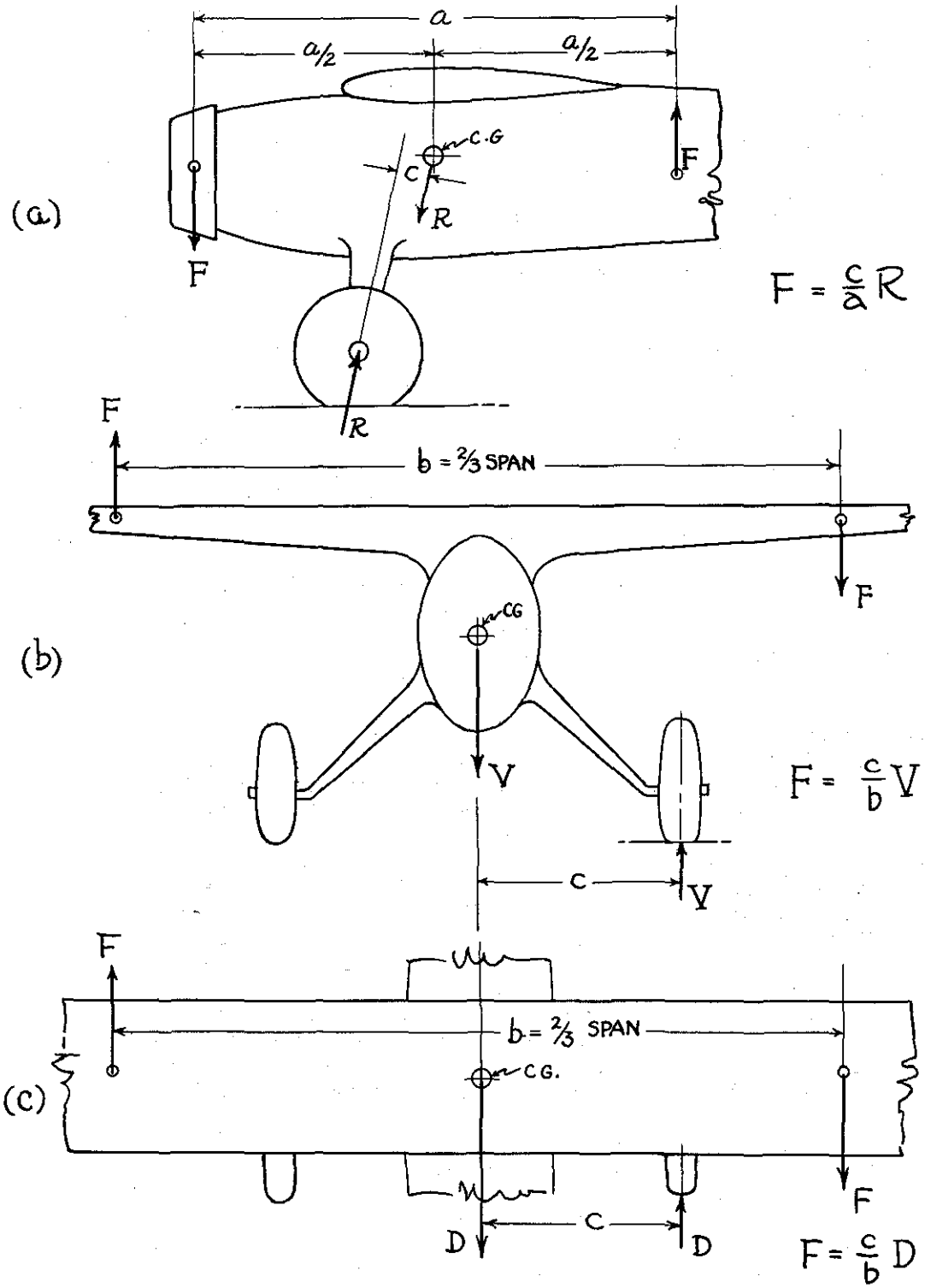

(REF CAM 04.36-B3)

FIG. 30 METHODS OF BALANCING FUSELAGE FOR UNSYMMETRICAL LOADS

301230 O—41——9

c. Fig. 30c shows an approximate method for balancing a moment about a vertical axis. This condition exists in a one-wheel landing. It is conservative (for the wing attachment members) to assume that the balancing couple is supplied entirely by the wing. The magnitude of the unbalanced moment about a vertical axis is, however, relatively small in the design conditions required in CAR 04. In order to secure ample rigidity against loads tending to twist the wing in its own plane, it may sometimes appear advisable to check the wing attachment members or cabane for a greater unbalanced drag load acting at one wheel, or for a side load acting at the tail.

d. It should be noted that the balancing couples shown on Fig.30 will act in addition to the inertia loads due to linear acceleration. For instance, in Fig. 30b the load V shown as a reaction at the CG actually represents the inertia loads of all the components of the airplane. Those due to the wing weight will act uniformly on each wing panel and will be added arithmetically to the forces representing the angular inertia effects. This applies also to the other cases illustrated.

C SPECIAL ANALYSIS METHODS

1. Torsion in truss-type fuselages. In analyzing conventional truss-type fuselages for vertical tail surface loads it will be found convenient to make simplifying assumptions as to internal load distribution. The following methods may be used for this purpose, the first method being more conservative than the second:

a. The entire side load and torque may be assumed to be resisted only by the top and bottom trusses of the fuselage. The distribution to the trusses can be obtained by taking moments about one of the truss centerlines at the tail post.

b. For the structure aft of the rearmost bulkhead the tail load may be represented by a side load acting at the center of the tail post and a couple equal to this load times its vertical distance from the center of pressure of the vertical tail. The side load may be assumed to be divided equally between top and bottom trusses. For the structure forward of the rearmost bulkhead the tail load may be represented by a side load acting at the center of the tail post and a torque acting at the rearmost bulkhead equal to the tail load times the vertical distance from the center of pressure of the vertical tail to the center of this bulkhead. This side load may be assumed to be divided equally between top and bottom trusses. The assumption may be made that the torque (not the forces composing the equivalent couple) is divided equally between the horizontal and vertical trusses. The couples acting on the bulkhead and resisted by the top, bottom, and side trusses can then be readily obtained. Stress diagrams should be drawn for the trusses to obtain the loads in the members. The longeron loads should be taken from the diagrams for the horizontal trusses or vertical trusses, or taken as the combined loads from both trusses, whichever are largest. (This arbitrary practice is advisable on account of the uncertainty of the load distribution between trusses.)

c. The diagonals of the rearmost bulkheads, i.e., the bulkheads through which the torque is transmitted to the wing, and of all bulkheads adjacent to an unbraced bay, should be designed to transmit the total torque. Intermediate bulkheads should be designed to transmit 25 percent of the total torque.

d. In some cases the loads obtained in the bottom truss members may be quite small. In such cases it should be noted that it is desirable to maintain a high degree of torsional rigidity in the fuselage and that the rigidity of the top truss will be completely utilized in this respect only when the bottom truss is equally rigid.

. Engine Torque. In investigating the conditions involving engine orque, the following points apply:

a. The basic torque may be computed by the following formula:

$T = 63{,}000\ P/N$, where
T = torque in inch pounds,
P = horsepower of engine,
N = propeller speed in revolutions per minute.

b. The resulting moment is taken care of by an unsymmetrical distribution of load between the wings and by forces in the fuselage cross bracing. In certain cases, especially when geared engines are used, the stresses due to the torque should be computed for all fuselage members affected, the necessary reactions being assumed at the connections of the wings with the fuselage. Otherwise the following approximation may be used for nose engines. The torque load is assumed to act down on the engine bearer and to be held in equilibrium by vertical forces acting at the main connections of the wings with the fuselage, the engine bearer and the members of the fuselage side truss being assumed to lie in a single plane parallel to the plane of symmetry.

c. When a direct-drive engine is carried by engine bearers that are supported at two or more points, the torque load should be divided between the points of support in the same proportions as the weights carried by the engine bearer. When an engine is supported by a vertical plate or ring, the torque can correctly be assumed to act at the points of attachment. (The dead weight of the engine, however, should be assumed to act at the center of gravity of the engine.)

d. In combining the torque condition with any other loading condition, for a symmetrical structure, the stresses due to torque are to be added arithmetically, not algebraically, to those obtained for the symmetrical loading condition, because if the forces induced by the torque load in any member are opposite in character to those due to the dead weights there will normally be a corresponding member on the opposite side of the fuselage in which the forces due to the torque loads and weights will be of the same character.

e. In analyzing an engine mount structure, care should be taken to distribute the torque only to those members which are able to supply a resisting couple. For example, in certain structures having three points of support for the engine ring, it may be necessary to divide the entire engine torque into a single couple, applied at only two of the supporting points.

D ANALYSIS OF STRESSED-SKIN FUSELAGES

1. The strength of skin-stressed fuselages is affected by a large number of factors, most of which are difficult to account for in a stress analysis. The following are of special importance:

a. Effects of doors, windows, and similar cut-outs.
b. Behavior of metal covering in compression as a shear web, including the effects of wrinkling.
c. Strength of curved sheet and stiffener combinations, including fixity conditions and curvature in two dimensions.
d. True location of neutral axis and stress distribution.
e. Applied and allowable loads for rings and bulkheads.

2. Unless a fuselage of this nature conforms closely to a previously constructed type, the strength of which has been determined by test, a stress analysis is not considered as a sufficiently accurate means of determining its strength. In all cases, the stress analysis should be supplemented by pertinent test data. Whenever possible it is desirable to test the entire fuselage for bending and torsion, but tests of certain component parts may be acceptable in conjunction with a stress analysis. As this subject is now being investigated by the NACA, the latest information should be obtained from that organization before the stress analysis or test methods are decided upon.

.37 PROOF OF FITTINGS AND PARTS

1. In the analysis of a fitting it is desirable to tabulate all the forces which act on it in the various design conditions. This procedure will reduce the chances of overlooking some combination of loads which are critical.

2. The additional ultimate factor of safety of 1.20 for fittings (CAR Table 04-7) is to account for various factors such as stress concentration, eccentricity, uneven load distribution, and similar features which tend to increase the probability of failure of a fitting. As noted in the Table, this factor may be covered by several other factors so that when the ultimate factor of safety for any portion of the structure equals or exceeds 1.80 the fittings included in this portion are not subject to an increase in factor above the value used for the primary members.

.4 DETAIL DESIGN AND CONSTRUCTION

.400 MATERIALS AND WORKMANSHIP

1. Materials and processes conforming to the specifications of the Army, Navy, S.A.E. or other responsible agencies are satisfactory. It is important that minimum specification values of strength properties given in ANC-5 be used rather than "typical" or "average" values.

2. Tolerances should be closely held in order that the assumed or tested structure is accurately reproduced. Metal sheet and tubing gages usually conform to well established specifications. Tolerances on machined parts are based on general practice and will vary from about ± .015 inch to values necessary tosecure interchangeability of mating parts. Tolerances on sheared and nibbled parts are usually ± 1/32 inch. Minus tolerances on section dimensions of wood structural members such as spars should not exceed 1/64 inch in the fully seasoned condition unless justified by check of margins. Plus tolerances are limited by assembly considerations.

3. Long assemblies such as spars with a large number of rivets will "grow" slightly as the riveting progresses. End fittings should therefore be jig installed as a last operation. A similar procedure is followed with welded assemblies. Heat treating of long welded structures results in shrinkage and in extreme cases allowances for this must be made.

.4010 GLUING

1. High grade casein, animal, and synthetic resin glues are satisfactory. Details of composition and methods are given in Appendix IV herein. It should be noted that condition of the surface, moisture content of the wood, gluing pressure, and protective coatings as well as other factors play an important part in the making of acceptable joints.

.4011 TORCH WELDING

1. Acceptable practices and further references are discussed in Appendix IV herein.

.4012 EIECTRIC WELDING

1. When arc welding is used the information needed for approval may be met by specifications or reports covering the following:

   a. The type of equipment to be used and the proposed scope of application of the process.

b. The proposed minimum requirements established for welders, covering qualifying tests, experience, etc. Reference to Air Corps Specification 20013-A "Welding Procedure for Certification of Welders", if this specification is used, is sufficient in this connection.

c. General procedure covering polarity, arc length, allowable voltage variation, electrode type and material, and identification of each welder's work.

d. Detail procedure for each combination of metals covering size and material of electrode, amperage and voltage for various gages of material.

e. The method of control including test and inspection procedure, etc. In this connection, sketches of the proposed standard test samples, a sample test report sheet, and a statement concerning the frequency of sample tests, should be submitted. Use of the Specification noted in b above is considered sufficient in this connection.

f. Drawings of parts to be welded.

2. When spot and/or seam welding are employed the information required for approval is similar to that required for the approval of arc welding, except that greater importance is attached to the equipment control means and the detail design of the pertinent joint than to the requirements for welders.

3. When the experience of a manufacturer and the reliability of the product has been demonstrated by him to be satisfactory, a blanket approval may be granted for his use of the process, i.e., he need not obtain approval of each subsequent specific application.

.4014 PROTECTION

1. Paints, varnish, plating and other coatings should be adequate for the most severe service expected. Information on the subject of protection is available from paint and varnish manufacturers as well as from metal and alloy producers. Reference may also be made to Appendix IV herein. Expensive changes dictated by service experience will be avoided if the question of protection is considered in the initial design stages. In addition to surface protection it is essential that moisture-trapping pockets and closed non-ventilated compartments be avoided. This is particularly true with light alloy and plywood structures. Drain holes should be provided at low points.

2. Two methods of specifying protective coatings are in general use. In one the various operations or code symbols therefor are listed on the pertinent detail or assembly while in the other method a specification

listing the operation and the numbers or classes of the parts to be so treated is prepared. The latter is more flexible when various agencies are being dealt with. Data submitted to the Administrator need cover only the minimum protection to be employed.

015 INSPECTION

1. Points most frequently in need of inspection are main fittings, control linkages, cables at pulleys and at fairleads and all moving parts and locations where wear is likely to occur or where lubrication is required. This includes all points where bolts or pins are installed as bearing surfaces which are subject to any movement and wear. Satisfactory inspection and servicing of these and other points can only be carried out if the size and location of inspection openings are such as to give adequate accessibility. Particular attention should be given to providing openings making it possible to inspect for rust or corrosion where dust, sand or moisture is likely to accumulate. Careful attention should be given to the tail section of the fuselage in this regard.

02 JOINTS, FITTINGS AND CONNECTING PARTS

1. These parts continue to be the most critical structural elements. No specific rules can be laid down but some of the more important considerations follow. The type of fitting is mainly dependent on the magnitude of the loads involved and the nature of the parts being connected. The material should be chosen after consideration of such factors as corrosion, fatigue, bulk, weight and production ease. It should be possible to inspect, service and replace each vital fitting. Points sometimes over-looked in the detail design of fittings include:

a. Stress concentration, either from section changes or from welding or heat treating effects.
b. Adequate allowance for flexibility of parts being joined.
c. Specifying proper surface condition, i.e., a rough turning job on a highly stressed part invites cracking and failure.

2. In the design of fittings at the end of wood spars there is a tendency to crowd bolts too close to the spar end in order to secure a more compact fitting. This sometimes results in a shear failure of the wood along the grain, even though the design load in the tension direction is samll. To reduce the possibility of such failures bolt spacings and end margins should be in accordance with Fig. 2-4 of ANC-5.

3. In using extruded sections it should be borne in mind that the nature of the extruding operation produces in effect a longitudinal grain structure. Fittings therefore should be designed to avoid critical "cross-grain" loading.

4. Fitting drawings should include tolerances for dimensions of critical sections, such as lugs, in order to maintain the required strength properties.

5. Some examples and discussion of good and bad fitting practice are given in Appendix IV herein.

Fig. 31 SUGGESTED CASTING PRACTICE
Ref. CAM 04.4023

ALLOY	MINIMUM FILLET RADIUS (3)	MINIMUM SECTION (3) (Webs, etc.)	MAXIMUM RATIO OF ADJACENT SECTIONS (4)	REMARKS (1)(2)
ALUMINUM - Alcoa 12, 43, etc., and equivalent	1/8"	1/8"		Used where strength is not primary consideration. Alcoa 12 (SAE No.33) should not be used where subject to shock or impact, due to its low elongation (2%). Alcoa 43 (SAE No.35) and 356 alloys which have high silicon content are used where leak-proof or complicated castings are required.
ALUMINUM - (High-Strength) Alcoa 195, 220 etc., and equivalent	3/16"	5/32 ~ 3/16" (1/8" if structurally unimportant)	3:1	Most aluminum alloy structural castings are made of the 195 or equivalent material. The 220 alloy is superior for shock and impact loading but castings should be simple due to the difficulty in securing satisfactory complex castings.
BRASS, BRONZE	1/8"	1/8"		Red brass such as SAE No. 40 or Federal Specification QQ-B-691, grade 2, is used in fuel and oil line fittings. Phosphor Bronze (SAE No.64 and No.65 or Federal Specification QQ-B-691 grade 6) is used for anti-friction installations such as bushings, nuts, gears and worm wheels. Manganese and aluminum bronzes (SAE No.43 and No.68 or Federal Specifications QQ-B-726 and QQ-B-691) are used where maximum strength and hardness are desired.
MAGNESIUM	1/8" (50% greater than aluminum preferred)	5/32"		Not recommended for use at elevated temperatures (limit approximately 400°F) or in exposed locations on seaplanes. Particular care should be observed in protecting against corrosion and electrolytic action.
STEEL	1/4" (1/2" preferred)	1/4"	5:2	Used primarily for heavily loaded parts such as in landing gear of large aircraft. Alloys used include chrome-molybdenum, nickel and manganese. When using high ultimate tensile-strengths the effect of the corresponding low elongation should be considered.

(1) For allowable stresses see ANC-5 "Strength of Aircraft Elements".
(2) For additional factor of safety see CAR 04, Table 04-7. When using this factor the 50% stress reduction noted in ANC-5 may be disregarded.
(3) Larger values should be used where possible.
(4) Highly dependent on other factors.

FIG. 31 SUGGESTED CASTING PRACTICE

4020 BOLTS, PINS AND SCREWS

1. Approved locking devices include cotter pins, safety wire, peening, and, with certain restrictions, Elastic Stop nuts and Dardelet Threaded parts.

2. Restrictions on the use of Elastic Stop Nuts are as follows:

   a. Two types of nuts, i.e. (1) fiber insert and (2) metallic insert (Hytemp), are approved subject to the following general restrictions:
      (1) They should be made to conform to Army or Navy material specifications.
      (2) They should not be used at joints which subject the bolt or nut to rotation
      (3) Bolts must be of such length that completely formed thread extends through the nut.
      (4) They should be called out on the pertinent drawings submitted to the Administrator.
      (5) Nuts of the fiber insert type should not be used where subject to temperatures in excess of 250°F.
      (6) Nuts of the metallic type (Hytemp) should not be used for primary structural connections in the following specific applications:
         (a) They should not be used to attach wing panels, fins and stabilizers.
         (b) They should not be used in the control system, including surfaces, hinges and bracket attachments thereof.
         (c) They should not be used to attach exhaust manifolds and similar items where the temperature may exceed 600°F.

3. Restrictions on the use of Dardelet Threaded parts follow:

   a. The parts must be manufactured by a licensee of Dardelet Threadlock Corporation under the terms of its license agreement. (Note this covers manufacturing considerations peculiar to this design.)
   b. They should be made to conform to Army or Navy material specifications.
   c. They should not be used at joints which subject the bolt or nut to rotation.
   d. Bolts must be of such length that completely formed thread extends through the nut.
   e. They should be called out on the pertinent drawings submitted to the Administration.

.4023 CASTINGS

1. Castings should be obtained from a reliable source with experience on similar type castings. Such castings should incorporate generous fillet radii, ample draft, and gradual changes of section. Sound castings can only be secured by proper consideration of and allowance for the flow of molten metal in the mold. Casting drawings should be "load marked", i.e., the direction and approximate magnitude of the design loads should be shown. It is then possible for the foundry to cast the densest and soundest metal at the critical sections. Finished surfaces should end in radii at inside corners to prevent stress concentration. Some of the more important design and drafting considerations are given in Fig.31. It should be emphasized that these are not given as requirements but merely as values and points found acceptable in general practice. Reference should be made to trade literature of the various metal and alloy producers for additional information.

2. As with other aircraft parts, the acceptance of castings for primary structure is predicated upon thorough and adequate inspection. It is customary to test and section or to X-ray the first castings of a new part in order to be certain of good design and satisfactory foundry technique. Production runs may be inspected visually in conjunction with occasional tests for verification. Hardness testing of the casting and physicaltests of test coupons cast with the part are also used. Steel castings with smooth surfaces may be inspected by magnafluxing. X-raying provides an excellent means of thoroughly inspecting castings if the results are properly interpreted, i.e., by an expert.

.403 TIE RODS AND WIRES

1. When unswaged threaded-end tie rods are used, particular attention must be paid to the end connections to insure proper alignment. The wires should be so carried through sleeves or fittings that any bending is limited to the unthreaded portion of the rod. Where this is not done, even small bending stresses may soon cause fatigue failure at the thread roots. High margins should be incorporated since practically all working from tension loads, with attendant stress concentration, will occur in the threaded portion. Swaged tie rods are considered much more satisfactory and may be no more costly in quantities. A satisfactory locking means should be used. Check nuts have been found acceptable for this purpose, when employed on terminals not subjected to appreciable vibration.

.404 FLUTTER PREVENTION MEASURES

A GENERAL

1. Flutter is a violent self-induced vibration of a body resulting from a coupling of aerodynamic, elastic and inertia forces acting upon the body. For detailed information on flutter theory and its application, reference should be made to one or more of the following:

Theodoresen and Garrick - "Mechanism of Flutter" NACA TR 685
Kassner-Fingado - "The Two Dimensional Problem of Wing Vibration"
Translation - Journal Royal Aero Society, October 1937
Küssner - "Status of Wing Flutter"
Translation - NACA TM 782, January 1936
Lombard - "Conditions For The Occurrence of Flutter"
California Institute of Technology Thesis (1939)

Reference to other work will be found in the bibliographies contained in the above. The study of flutter is passing through a period of rapid development and it appears that a better and more accurate understanding of the inter-relation of rigidity, mass properties and frequencies and their effect upon flutter will soon emerge.

2. Flutter theory is in general based upon <u>true</u> velocity and sea level atmospheric conditions. For this as well as other reasons an ample margin, particularly on high performance aircraft, should be maintained between the <u>computed</u> flutter speed and the <u>actual</u> dive speed attained in testing. The <u>trend</u> of critical flutter speed with altitude may be expressed thus:

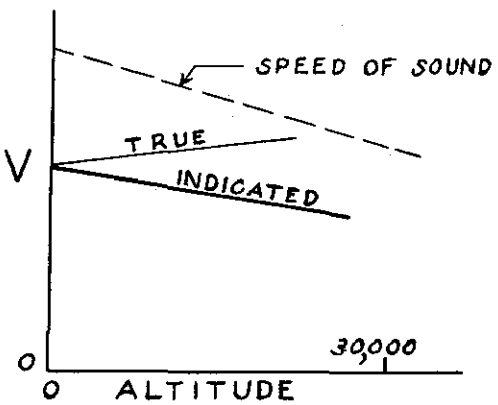

but values for specific cases will be dependent upon wing weight and other factors.

3. For wings, the use of the fundamental theory of Theodorsen has been simplified for certain cases by the work of Bergen and Arnold (given at the Institute of the Aeronautical Sciences meeting at Los Angeles in June 1940) who treat the special case of wing bending-aileron by a graphical method, and Wylie (unpublished). In addition, for civil aircraft, conventional size and performance, the use of a suitable wing torsional rigidity criterion, together with proper observance of other measures, provides adequate insurance against flutter.

4. For control surfaces, recent unpublished Air Corps studies (Dent and Smilg) indicate that a relationship:

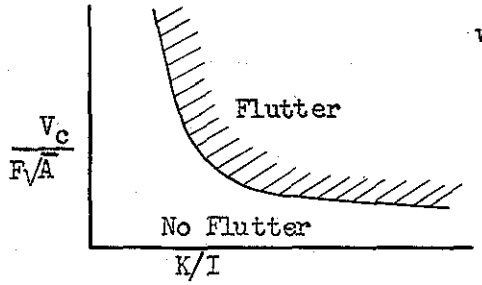

where V_C = Flutter Speed

F = Freq. Fixed Surface

A = Area Mov. Surface

K/I = Balance Coefficient of Movable Surface

holds considerable promise, and they have tentatively established a number of check points on the curve. The basic similarity of the above curve to the usual Küssner formula of:

$$V_C = \frac{F\,C}{K}$$

where F = Critical Frequency
C = Wing Chord
K = Reduced Frequency Coefficient (Dependent on particular characteristics of the airplane)

is apparent, since both show an increase in flutter speed with an increase in frequency or size of the airplane, other factors remaining constant (both C and $\sqrt{A}$ being dimensionally length units).

5. By replotting the Air Corps data on the scales used in Fig. 32A, the following is obtained:

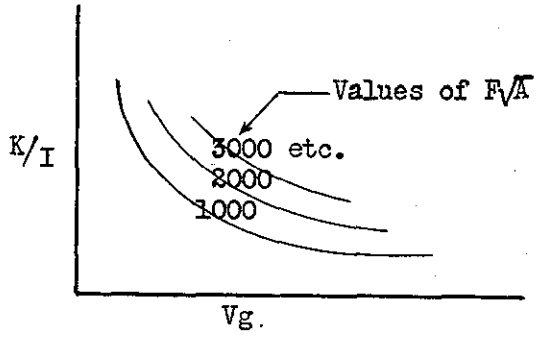

If the results of further study and experience warrant, suitable modifications to the K/I - Vg relation shown on Figures 32A and 32B will be made.

6. In general, the various limiting values given hereafter to rigidity, mass balance and frequency ratio, and the practices on detail design should be closely observed. As indicated above, however, rapid progress is being made toward a better understanding of the problem, and for new aircraft, therefore, it is recommended that an outline of the proposed flutter prevention measures be submitted to the Administration for examination and comment as early in the development as possible. The Flutter Control Data Form No. ACA-719 (Table Vb) used in the final vibration testing was evolved for the dual purpose of simplifying submittal of data and of facilitating study by the National Advisory Committee for Aeronautics and other interested government agencies through a more rapid collection of information.

B RIGIDITY

1. This factor is of first importance, since coupling (and consequently flutter) can only occur through deflection. However, increases in aircraft size, a trend toward thinner airfoils, prevalence of discontinuities and cutouts, and weight limitations make necessary the establishment of minimum acceptable rigidities. Rigidity may be represented in terms of frequencies, and often is in flutter theory.

2. Wings. The torsional rigidity of wings is highly important. This should be investigated by means of a wing torsion test (CAM 04.31E) unless other adequate data are submitted. Figure 32, a development of an earlier curve of the same number, but based upon considerably more information including certain Navy data, indicates values of C_{TR} which have been found satisfactory for conventional designs. If the test is conducted on a fabric covered wing with taut fabric, an allowance of approximately 10% (dependent somewhat on the size of the wing) should be made for the effect of fabric aging. Since the actual torsional deflection of the wing will depend upon the moment coefficient of the airfoil employed, it is advisable to introduce the additional criterion that the maximum torsional deflection under the limit load critical for torsion not exceed 3°.

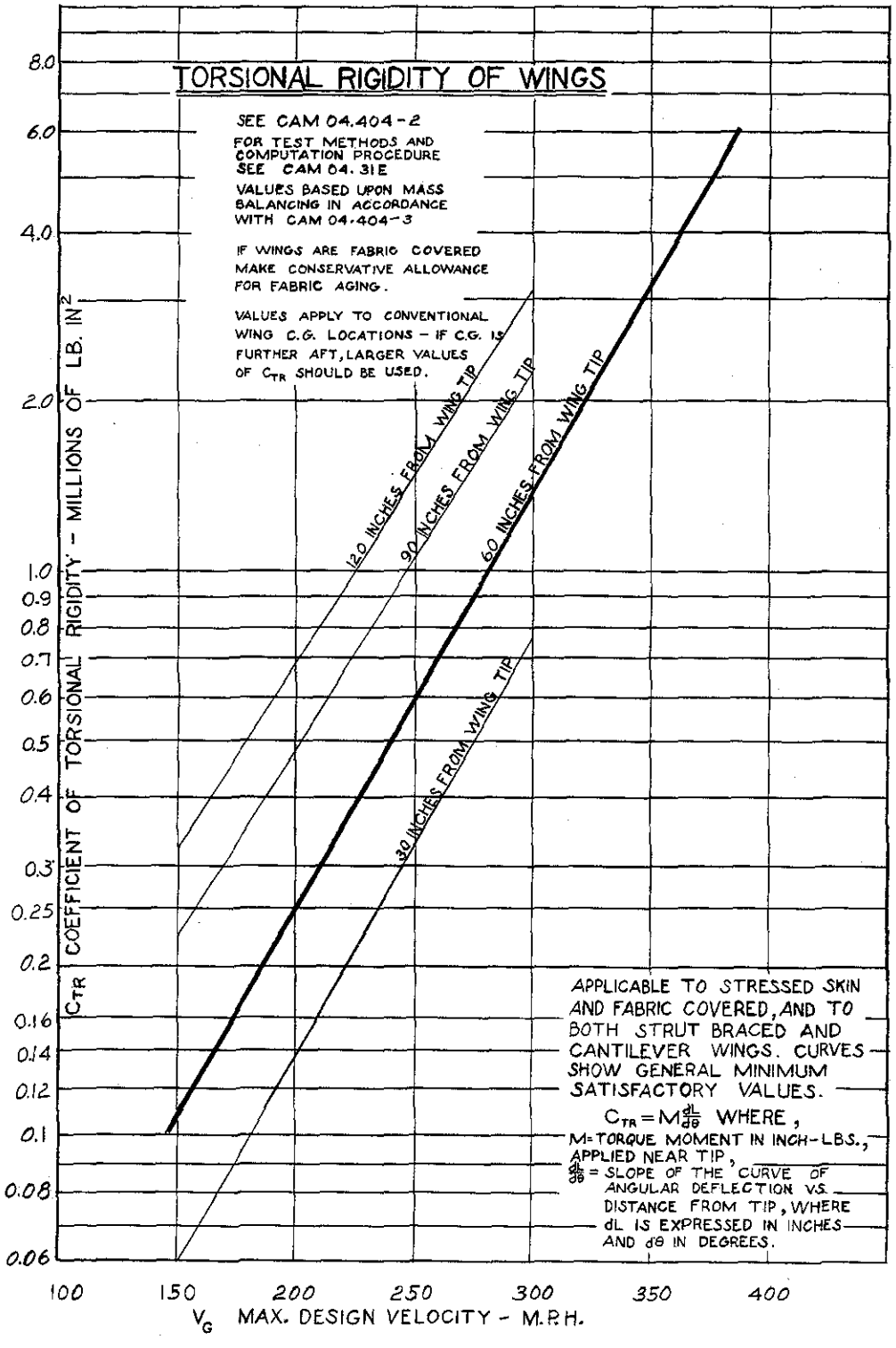

FIG. 32

REVISED 9-40

C MASS BALANCING

1. For methods of computing static and dynamic balance values see CAM 04.424. (The weight and static hinge moment, or c.g. location, of finished movable surfaces should be checked to insure that the computed values are not unconservative.) See paragraph F DETAIL DESIGN below, for notes on the installation of balance weights. Note that the specified dynamic balance coefficient values may in some cases be influenced by the frequency ratio (see Fig. 32C).

2. Compliance with the following dynamic balance coefficients and static balance conditions should be shown unless other equally effective steps to prevent control surface flutter are shown to have been taken:

a. Ailerons. When Vg is in excess of 150 mph the dynamic balance coefficient as computed about the aileron hinge axis and the longitudinal axis of the airplane should not be greater than the following value

$$K/I = 1.6\ (3 - Vg/100) \quad \text{(See Fig. 32A)}$$

except that it need not be less than zero. Ailerons on internally braced wings, or on airplanes with Vg in excess of 200 mph should be completely statically balanced about their hinge line when in the neutral position. Special consideration will be given to lesser static and dynamic balance when the aileron control system is substantially irreversible.

b. Rudders. When Vg is in excess of 150 mph, the dynamic balance coefficient of the rudder(s), as computed about the rudder hinge axis and the axis of torsional vibration of the fuselage, should not be greater than the value given in paragraph a. above, except that it need not be less than zero. When rudders are not in the plane of symmetry they should be completely statically balanced (zero unbalance).

c. Elevators. When Vg is in excess of 150 mph, the dynamic balance coefficient of each separate elevator (for each half of a continuous elevator), as computed about the elevator hinge axis and the centerline of the intersection of the stabilizer and the plane of symmetry, should not be greater than the following value

$$K/I = 3.0 - Vg/250 \quad \text{(See Fig. 32B)}$$

When the rudder(s) has (have) complete dynamic balance about a conservatively chosen axis, a special ruling may

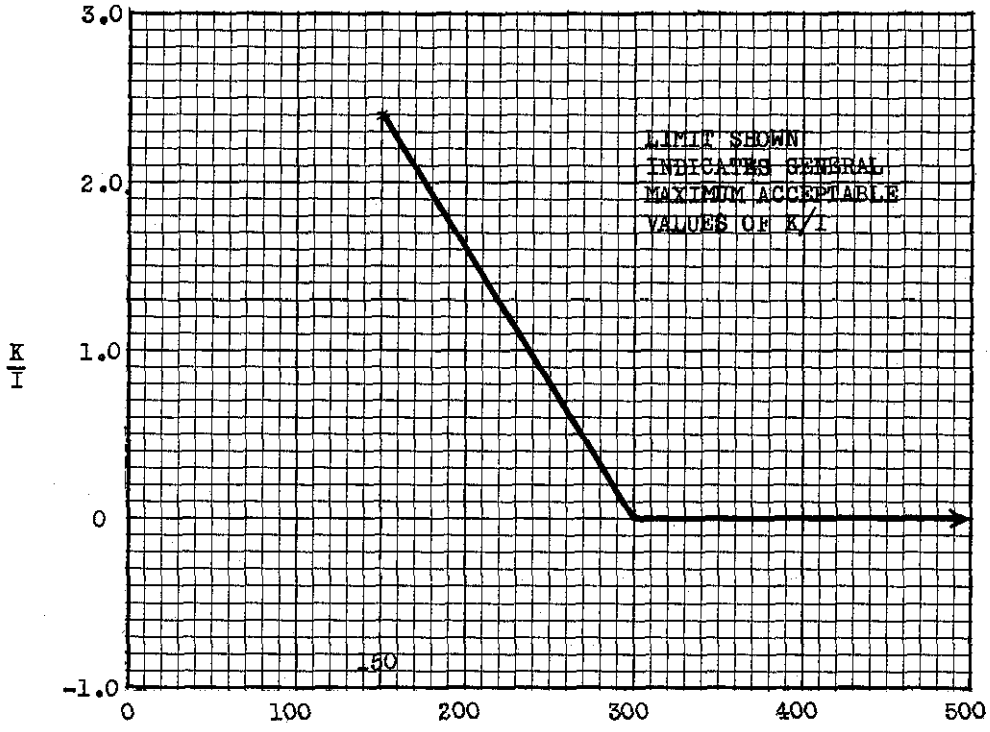

FIG. 32A AILERON & RUDDER DYNAMIC BALANCE

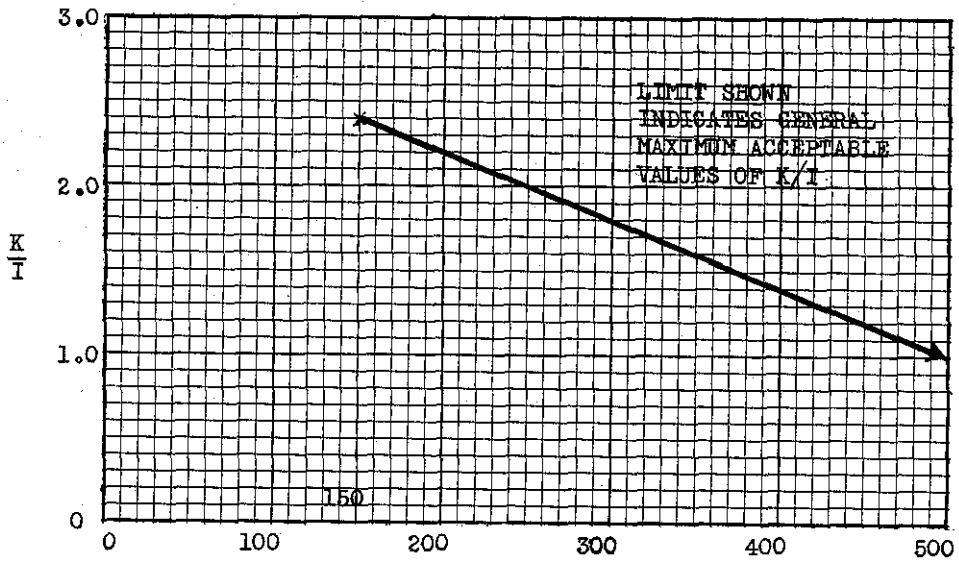

FIG. 32B ELEVATOR DYNAMIC BALANCE

be obtained from the Administration regarding the elevator dynamic balance if the coefficient is greater than above specified. This ruling will be dependent on the general design of the entire tail unit.

d. Tabs. Trim and balancing tabs should be statically balanced about their hinge axes unless an irreversible non-flexible tab control system is used. The balancing of control tabs will depend on the particular installation involved and special rulings should be obtained from the Administration in such cases.

D FREQUENCY RATIO

1. In accordance with general practice, in this discussion frequency ratio is defined as the frequency of the movable surface divided by the frequency of the fixed surface (or other element to which the movable surface is attached), and for a single airfoil as the frequency in bending divided by the frequency in torsion, thus:

$$\frac{F \text{ movable surface}}{F \text{ fixed surface}}, \text{ and}$$

$$\frac{F \text{ bending}}{F \text{ torsion}}$$

Tests conducted by the Air Corps with flutter models have indicated that, when the frequency ratio involving a movable surface is greater than 1.0 the possibility of flutter in this mode is much reduced as compared with frequency ratios less than 1.0. A study of previous vibration test data and the service records of the aircraft tested, together with Air Corps test data, have indicated the desirability of using the frequency ratio as an additional limitation on the curves of the dynamic balance coefficient (K/I) versus design gliding speed (Vg), as shown in Fig. 32A for the aileron and rudder and in Fig. 32B for the elevator.

2. This limitation is expressed as a curve in Fig. 32C. The shaded portion marked "Approval dependent upon special considerations" is considered an undesirable range and approval is subject to consideration of the modes involved, actual values of frequencies, speed of the aircraft, value of K/I, etc. For this reason it is advantageous to submit to the Administration as early as possible in the development of a new model an outline of the proposed flutter prevention measures.

301230 O—41——10

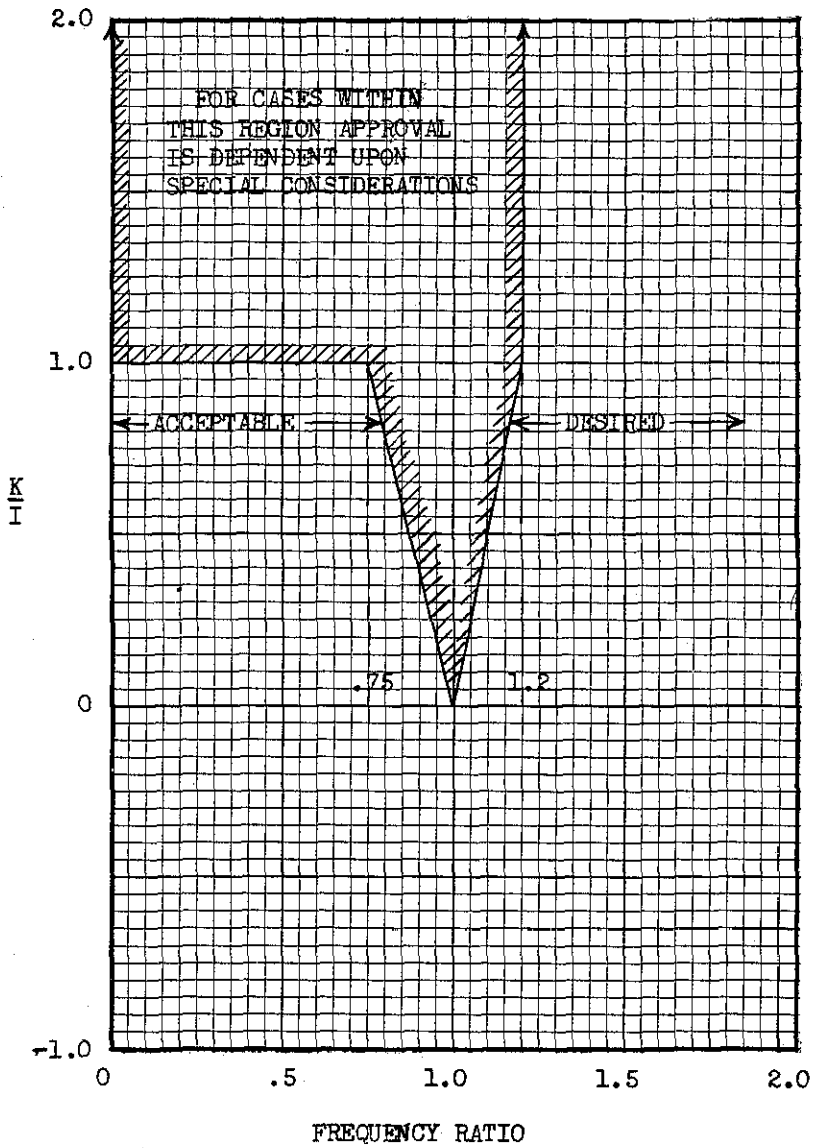

FIG. 32C DYNAMIC BALANCE VS.
FREQUENCY RATIO FOR CONTROL SURFACES

3. The following frequency ratios should be determined from the vibration test data (see CAM 04.323 and Form ACA 719) and check against the K/I - frequency ratio limitations of Figure 32C: (For description of particular modes see CAR 04.323)

a.** Rudder (as a unit) / Fuselage Torsion, or * Rudders (unsym.) / Fuselage Torsion

b.** Rudder (as a unit) / Fuselage Side Bending, or * Rudders (unsym.) / Fuselage Side Bending

c. Rudder (as a unit) / Fin Bending

d.* Rudders (Sym) / Stabilizer Bending

e.* Rudders (Unsym) / Stabilizer Rocking about Fuselage Attachments

f.* Rudder (Unsym) / Fin Bending

g. Elevator (Sym) / Fuselage Vertical Bending

h. Elevator (Sym) / Stabilizer Bending

i. Elevator (Unsym) / Fuselage Torsion, or Elevator (Unsym) / Stabilizer Rocking about Fuselage Attachments

j. Aileron (Sym) / Wing Bending (Sym)

k. Aileron (Sym) / Wing Torsion(Sym)

l. Wing Bending (Sym) / Wing Torsion (Sym)

m. Stabilizer Bending / Stabilizer Torsion

* Only for rudders not in the plane of symmetry.
** Only for a rudder in the plane of symmetry.

n. Balance Weight and Arm Assembly
Surface mode (see below)

Note: The critical balance weight and arm frequency will usually be bending in a plane normal to the hinge line of the surface. The surface mode would be the one likely to couple with the above—such as movable surface (sym.). It is desirable to have the above frequency ratio substantially greater than 1.0. However, the balance weight arm bending frequency should also be checked in a plane parallel to the hinge line of the surface. This may be critical for the elevator balance weight in a fuselage side bending mode, etc.

The following special cases should also be considered for large aircraft:

o. Aileron (Unsym)
Wing Bending (Unsym)

p. Aileron (Unsym)
Wing Torsion (Unsym)

q. Wing Bending (Unsym)
Wing Torsion (Unsym)

r.* Rudder (Torsion)
Fin Rocking about Stabilizer Attachments

Note: This would apply to outboard vertical surfaces disposed both above and below the stabilizer and is somewhat analogous to an elevator unsymmetrical—fuselage torsion case.

s.* Stabilizer Torsion
Fuselage Torsion

* Only for rudders not in the plane of symmetry.

In general the natural frequency of a tab having an irreversible control mechanism should not be less than 1500 c.p.m. In the case of a servo tab with a frequency ratio less than 1.2, complete dynamic balance should be had; i.e., K/I = 0.

E DETAIL DESIGN

1. Service troubles and accident records reveal that particular attention should be paid to items such as the following:

a. The trailing edges of movable surfaces should be rugged to reduce the possibility of additional weight being added during field repairs with an adverse effect on the mass balance characteristics.
b. Tab mechanisms should be simple and rugged to avoid improper assembly, or the possibility of play developing due, for example, to open end (i.e., magneto type) ball thrust bearings being inserted backwards.
c. Provide adequate "carry through" structure to insure rigidity.

2. A rugged aileron hinge bracket is of little merit unless the rear spar to which it attaches is well restrained against "rolling". Likewise rugged cabane members with good angular relations will fail to restrain the wing cellule if anchored into eccentric apex joints.

3. The interconnection between elevators should be rigid and rugged, in order to maintain a satisfactory margin of safety against an elevator unsymmetrical (torsion) mode of vibration. Butt welded joints should preferably be reinforced with gussets.

4. The general principles of flutter prevention should be observed on all airplanes. This applies particularly to the design and installation of control surfaces and control systems and includes such desirable features as structural stiffness, reduction of play in hinges and control system joints, rigid interconnections between ailerons and between elevators, complete static and dynamic balance of control surfaces and high damping. For fixed surfaces, such as wings, stabilizers, and fins, it is desirable to keep the center of gravity location of the surface as far forward as possible. Features tending to create aerodynamic disturbances, such as sharp leading edges on movable surfaces, should be avoided. These principles apply also to wing flaps and particularly to control surface tabs which are relatively powerful, and correspondingly more dangerous if not properly designed. In the design of control surfaces, dynamic balance should be achieved, as far as practicable, by distributing the structural material in such a way (element by element, spanwise) that a uniform condition of static balance will result without adding large amounts of lead. If possible, the use of large concentrated weights should be avoided, since fatigue failures may result in the supporting arms and attachments. When concentrated weights are used to achieve the required degree of dynamic and static balance, it is a good rule that the number of weights used be at least equal to the number of hinges. The attachment of each weight should be sufficiently strong and rigid that its frequency is above that

of the surface proper. Where weights are riveted into the leading edge of a surface no difficulty should be encountered on this point, but if an arm is used to support the mass, a design factor several times the Condition I load factor may be necessary for the arm and its attachment to the surface.

5. It should be realized that various forms of flutter are possible and that there usually exists for each type of flutter a critical speed at which it will begin. This critical speed will be raised by an improvement in the antiflutter characteristics of the particular portion of the airplane involved and may even be eliminated entirely in some cases.

.4110 WING BEAM JOINTS

1. See CAM 04.402.

.415 FABRIC COVERING

1. Except in the case of light airplanes, the fabric should conform with AN-CCC-C-599 or the equivalent. The material covered by this specification is commonly known as Grade A mercerized cotton fabric. In the case of light airplanes the use of a lighter weight fabric of similar quality, known as "light airplane fabric", is acceptable. This material should be purchased to a definite specification. The following values are acceptable:

Threads per inch	--- 114 warp, 116 fill
Strength	---------- 50 lbs/in warp, 40 lbs/in fill
Weight	---------- 2.6 oz/sq yd.

Tape and thread should likewise be of high quality and should be purchased to definite specifications.

2. Method of Attaching Fabric to the Structure. Usually this is accomplished by lacing to the ribs, in which case the proper spacing of ribs and lacing is very important. Fig. 33, derived from extensive experience, indicates maximum satisfactory values. Other means of attachment such as self-tapping screws, wire and strip should give comparable support. In questionalbe cases, sketches and tests (or test proposals) should be submitted for rulings by the Administration.

3. Dope and Other Protective Coatings. The number and type of such coatings is usually based on such factors as the service expected, degree of finish desired, and cost. A typical schedule for doping is given below:

a. Two coats of clear nitrate dope, brushed on and sanded after second coat.
b. One coat of clear nitrate dope, either brushed or sprayed and sanded.
c. Two coats of aluminum pigmented dope, sanded after each coat.
d. Three coats of pigmented dope (the color desired), sanded and rubbed to give a smooth glossy finish when completed.

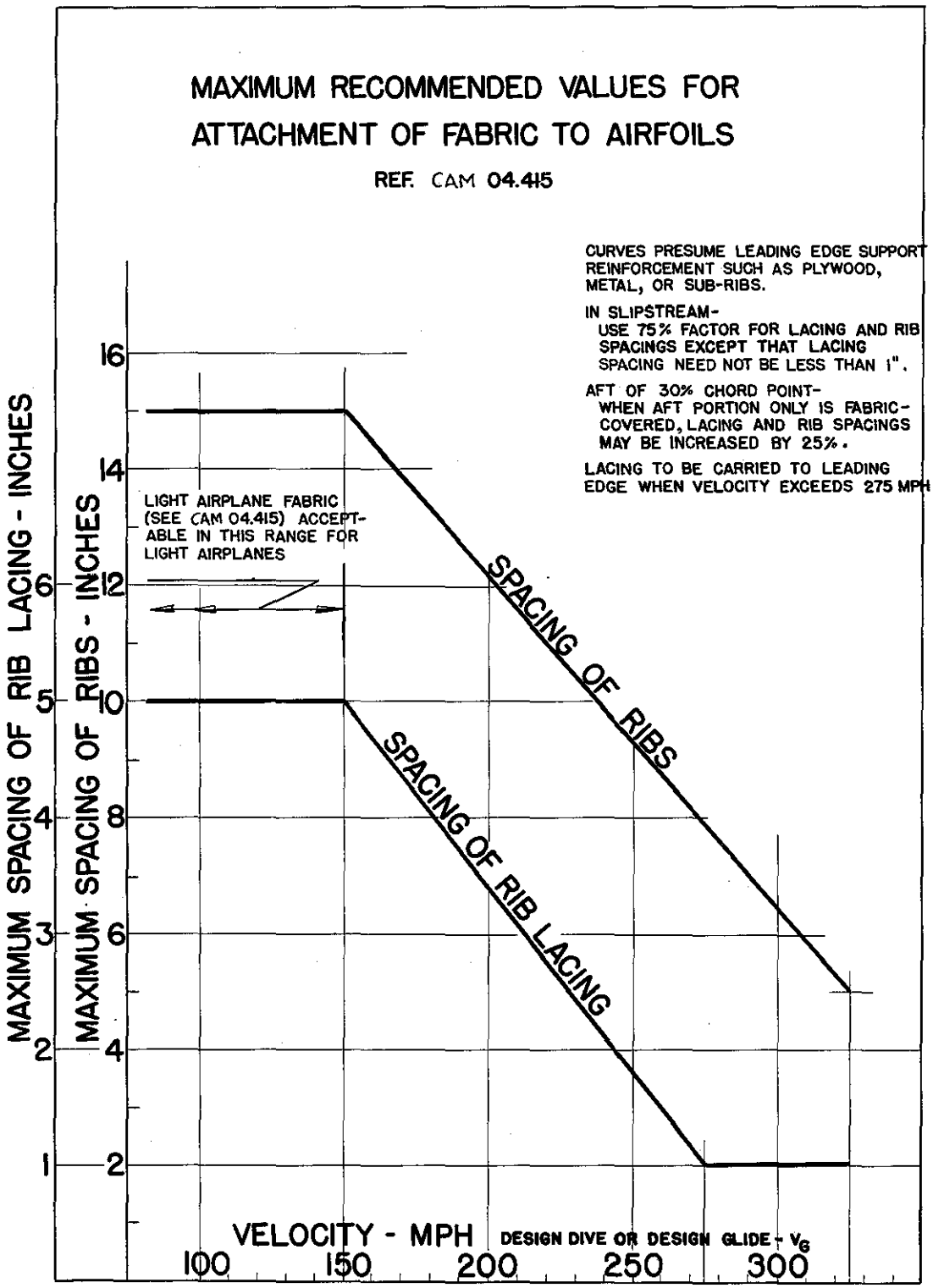

FIG. 33 FABRIC ATTACHMENT

Precaution should be taken not to sand heavily over center portions of pinked tape and over spars in order not to damage the rib stitching cords and fabric. For further details see Appendix IV herein.

.416 METAL-COVERED WINGS

1. The covering should be sufficiently strong and adequately supported to withstand critical air loads and handling without injury or undesirable deformations. Deflections or deformations at low load factors which may result in fatigue failures should be avoided. In general, skin which shows deformations commonly known as "oil-canning" under static conditions is considered unsatisfactory.

2. In an attempt to establish an empirical method of predicting panel sizes which will be free from unsatisfactory "oil-canning", Fig. 34 has been included as a proposal. In this case the skin thickness and unsupported panel width have been considered the main variables. Other important variables include stress (if appreciable) carried by skin, airspeed, wing loading, and workmanship. Comments and data on this subject are solicited.

.42 DETAIL DESIGN OF TAIL AND CONTROL SURFACES

1. It is very important that control surfaces have sufficient torsional rigidity. No specific limits of permissible maximum deflection of the surface alone are offered, since these may vary widely with the type, size and construction of the surface. However, the behavior of the surface during proof tests should be closely observed. In addition the effect of the control system "stretch" on the total surface deflection under limit maneuvering loads should be considered from the standpoint of "surface usefulness", as described in CAM 04.43-11.

2. Clearances, both linear and angular, should be sufficient to prevent jamming due to deflections or to wedging by foreign objects. It is common practice in the design stage to incorporate an angular clearance of 5 degrees beyond the full travel limit. Surfaces and their bracing should have sufficient ground clearance to avoid damage in operation.

3. External wire bracing on tails is subject to vibration and the design of the wire assembly and end connections should be such as to withstand this condition. Swaged tie rods are recommended, except that for use on light aircraft unswaged rod is acceptable if the points covered in CAM 04.403 are followed. Leading edges and struts should have adequate strength to withstand handling loads if handles or grips are not provided.

4. Direct welding of control horns to torque tubes (without the use of a sleeve) should be done only when a large excess of strength is indicated.

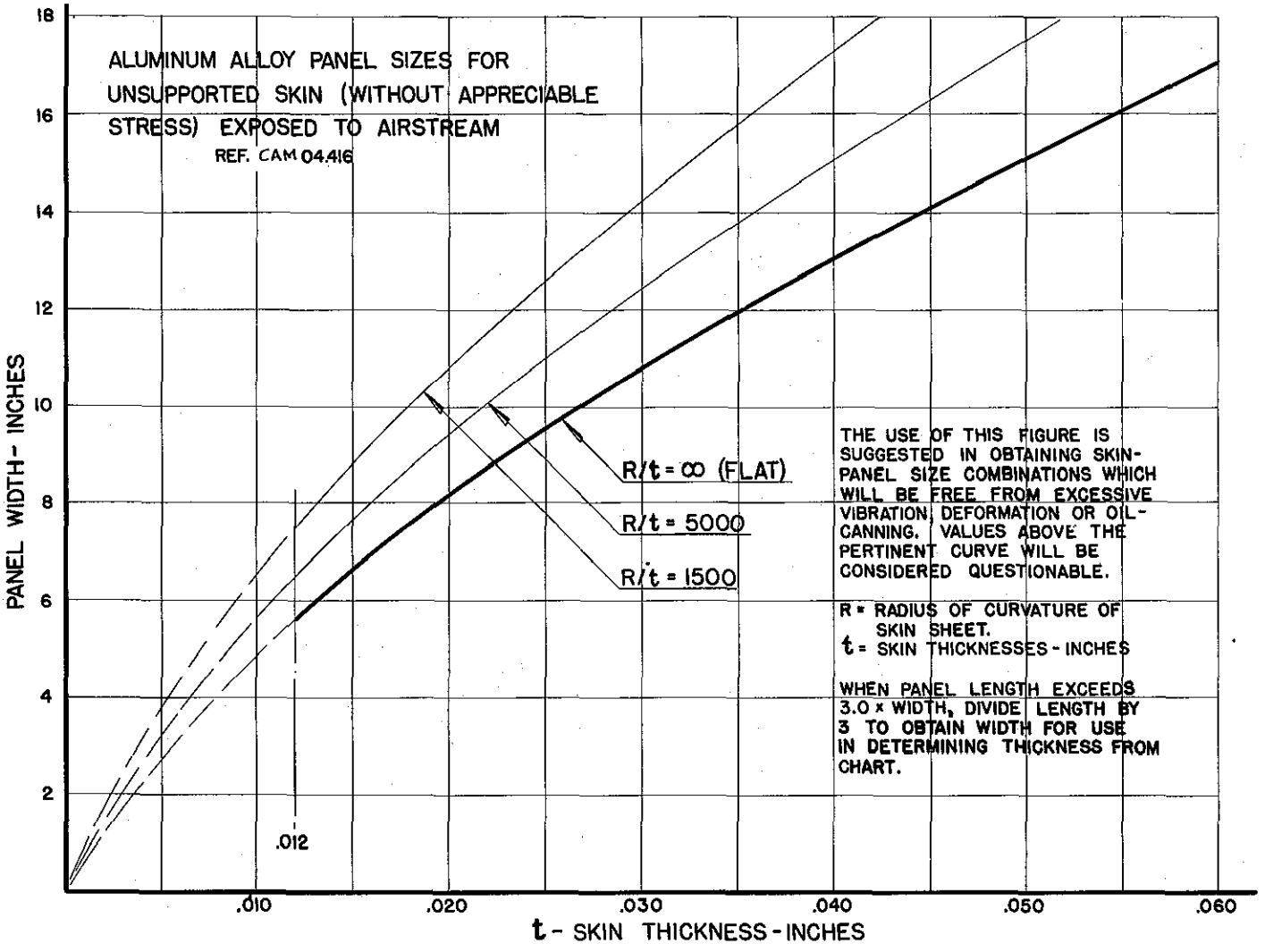

FIG. 34 ALUMINUM ALLOY PANEL SIZES

.421 STOPS

1. Stops are specifically required in the case of adjustable stabilizers and elevator trailing edge tab systems (CAR 04.421 and 04.4210). Some form of stop should, however, be employed at all surfaces in order to avoid interferences and possible damage to the parts concerned and to limit the travel to the approved range. (See also CAM 04.431)

.422 HINGES

1. The following points have been found of importance in connection with hinges:

a. Provision for lubrication should be made if self-lubricated or sealed bearings are not used.

b. The effects of deflection of the surfaces, such as in bending, should be allowed for, particularly with respect to misalignment of the hinges. This may also influence spacing of the hinges.

c. Sufficient restraint should be provided in one or more brackets to withstand forces parallel to the hingecenterline. Rudders, for instance, may be subjected to high vertical accelerations in ground operation.

d. Hinges welded to elevator torque tubes or similar components may prove difficult to align unless kept reasonably short and welded in place in accurate jigs.

e. Piano type hinges are acceptable with certain restrictions. In general only the "closed" type should be used, i.e., the hinge leaf should fold back under the attachment means. The attachment should be made with some means other than wood screws, and this attachment should be as close as possible to the hinge line to reduce flexibility. Piano hinges should not be used at points of high loading, such as opposite control horns, unless the reaction is satisfactorily distributed. Due to the difficulty in inspecting or replacing a worn hinge wire, it is better to use several short lengths than one long hinge.

.423 ELEVATORS

1. When dihedral is incorporated in the horizontal tail the universal connection between the elevator sections should be rugged to conform with CAR 04.423.

.424 DYNAMIC AND STATIC BALANCE OF CONTROL SURFACES

1. Dynamic Balance. A movable surface is dynamically balanced with respect to a given axis if an angular acceleration of the surface about that axis does not tend to cause the surface to swing about its own hinge line. A control surface which is dynamically balanced about a certain axis will therefore remain "neutral" with respect to a torsional vibration about that axis; that is, it will act as though rigidly connected with, and a part of, the fixed surface to which it is attached. As the types of flutter likely to be encountered in aircraft structures involve both torsional and bending vibration, the type of balancing employed and the choice of a suitable reference axis for any given case will depend on the particular form of flutter to which the component is subjected.

2. Static Balance. Complete static balance of a movable control surface is obtained when the CG of the movable structure is located on the hinge line; i.e., zero unbalance hinge moment, or in a plane through the hinge line and normal to the median plane of the surface. The following points should be noted in connection with statically balanced surfaces:

a. When a surface is in complete static balance the numerical value of the product of inertia (K) is the same for any set of parallel oscillation axes. However, the sign of the product of inertia (K) will depend on the location of the oscillation axis with respect to the center of pressure (CP) of the surface.
b. It should be noted that when each section of a surface perpendicular to its hinge axis is statically balanced, the surface will be in complete dynamic balance for oscillation about any axis perpendicular to the hinge axis; i.e., $K/I = 0$.
c. When the surface is statically balanced it will have some dynamic unbalance with respect to oscillations about an axis parallel to the hinge axis; i.e., $K/I = 1.0$.

3. Balance Coefficients. The dynamic balance coefficient, K/I, is a measure of the dynamic balance condition of a control surface. A zero coefficient corresponds to complete dynamic balance for any given set of axes; i.e., perpendicular, parallel, or at an angle to each other. Positive and negative coefficients correspond to dynamic unbalance or over-balance, respectively. This coefficient is non-dimensional and consists of a fraction whose numerator is the resultant weight product of inertia of the control surface including balance weights (about the hinge

and oscillation axes) and whose denominator is equal to the weight moment of inertia of the control surface (including balance weights) about the hinge axis. The coefficient K/I may be said to represent:

$$\frac{\text{Exciting Torque}}{\text{Resisting Torque}}$$

and is therefore more rational than the coefficient C_B which is:

$$\frac{\text{Exciting Torque}}{\text{Weight x Area}}$$

Both are non-dimensional and will yield comparable results for conventional surfaces, but only K/I may be considered to properly apply to other surfaces. It should be pointed out, however, that when K/I is used, variations with different aspect ratio of the control surface may arise, particularly for the perpendicular axes case. This does not occur with C_B.

4. Product of Inertia with Respect to Two Axes that are Mutually Perpendicular. In computing the dynamic balance coefficient, K/I, of a control surface for axes that are mutually perpendicular (within 15°), the following procedure may be used: Referring to Figure 35:

a. Assume X-axis coincident with the assumed (or known) oscillation axis. Positive direction from the Y-axis is aft of control surface hinge axis, and negative forward of hinge.

b. Assume Y-axis coincident with the control surface hinge axis. Positive direction from X-axis is taken on the same side of the X-axis as is the center of pressure (CP) of the maneuvering load on the surface (see CAR 04, Figures 04-5 and 04-7 for the maneuvering load distribution). It should be noted that it is unnecessary to compute the position of the CP for these purposes, if the side of the X-axis on which it lies may obviously be determined by inspection.

c. After the reference axes have been established, the surface should be divided into relatively small parts and the weight of each such part (w) and the perpendicular distance from its CG to each axis (x to Y-Y axis and y to X-X axis) should be determined and tabulated. (see typical table, figure 35A). The weights and distances should be accurately determined. The weights and CG locations of doped fabric and trailing edge material are sometimes underestimated with a resulting serious unbalance condition, and a larger value of K/I. In addition changes in service may tend to increase the

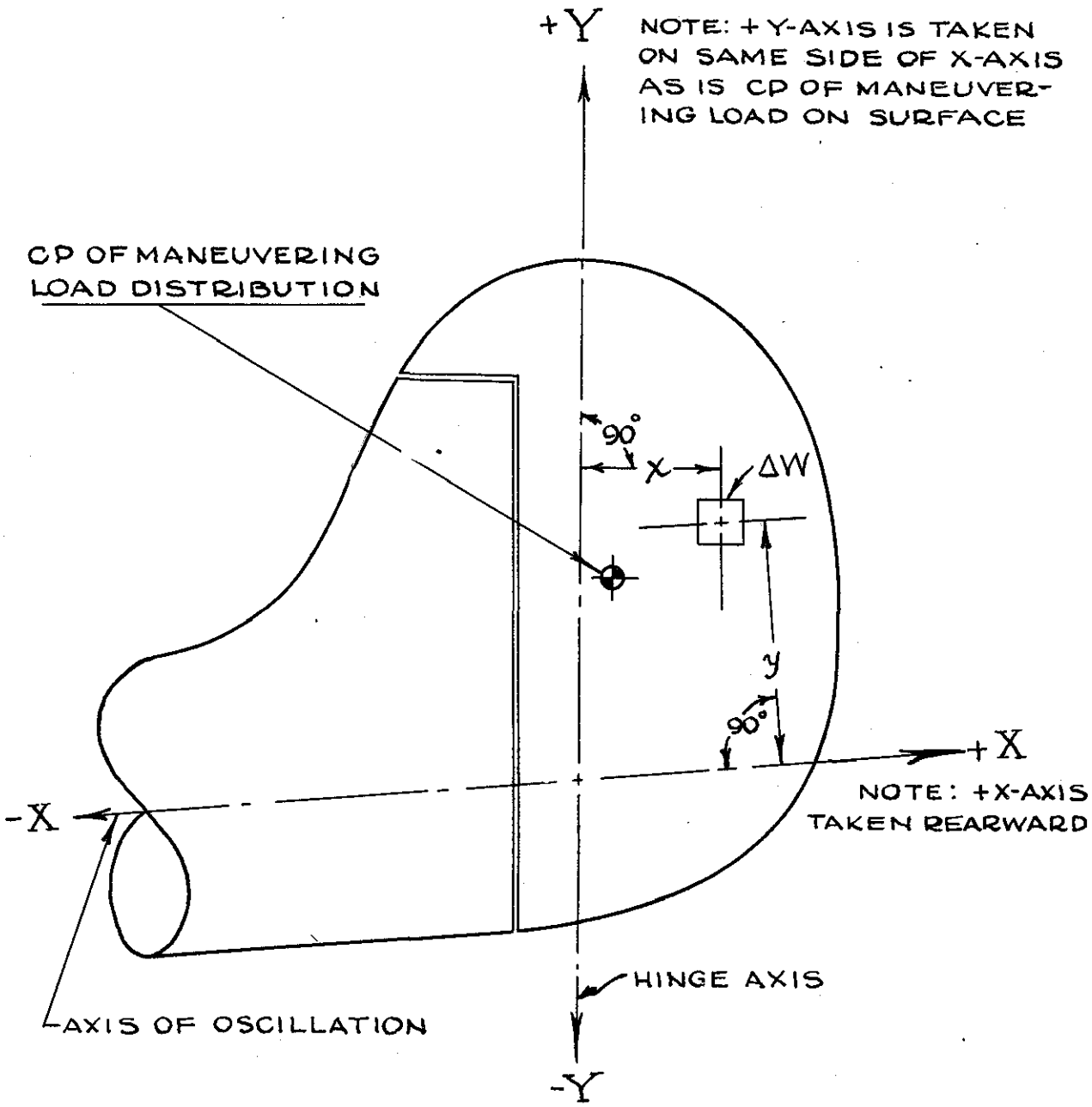

FIG. 35 DYNAMIC BALANCING OF CONTROL SURFACES
(REF. CAM 04.424-3)

TYPICAL TABLE

for

MASS BALANCE COMPUTATIONS

MODEL:_____ SURFACE:_____ DATE:_____

Item No.	Part No.	Description	Weight w lbs.	Dist. from hinge ℄ x inches	x^2	Moment = wx		$I_{y-y}=wx^2$	Dist. from oscillation axis = y In.	K = wxy	
						− inch-lbs.	+ inch-lbs.	lb.-ins.^{2}		−	+
			(1)	(2)	(3)	(4)	(5)	(6)	(7)	(8)	(9)
1 2 etc.											
		TOTALS	Σ			$-\Sigma$	$+\Sigma$	Σ		$-\Sigma$	$+\Sigma$

STATIC UNBALANCE = ALGEBRAIC SUM OF Σ(Col. 4) and Σ(Col. 5) =

$$K/I_{y-y} = \frac{\Sigma(\text{Col. 8}) + \Sigma(\text{Col. 9})}{\Sigma(\text{Col. 6})} =$$

FIG. 35A

unbalance. Referring to Figure 35 of CAM 04, the product of inertia of the item of weight, w, is equal to wxy. The product of inertia, K, of the complete surface is the sum of the individual products of inertia of each part. Hence, K = Σ wxy. The weights should be expressed in pounds and the distance in inches. K is then in lbs.-inches^2.

d. Moment of Inertia of Control Surface about the Hinge Axis. The moment of inertia (I_{y-y}) of the control surface about its hinge axis may be computed from the data found for computing K (in paragraph c, above). I for a small part of the weight, w, is equal to wx^2, when x is the perpendicular distance from its CG to the hinge axis. Hence I_{y-y} is equal to the sum of the individual moments of inertia of each part and is equal to $\Sigma w x^2$. The weight should be in pounds and the distance in inches, so that I_{y-y} will be in lbs.-inches^2. It should be noted that the correct value of I_{y-y} will only be obtained, if the weight items are broken down into a sufficient number of small parts, especially in the chordwise direction. This is particularly important for such items as fabric covering and tape, dope, metal skin, trailing edge tabs, tab operating mechanism, etc., unless the moment of inertia is first obtained about a parallel axis through the CG of the larger concentrated weight, w, and then transferred to the hinge axis; i.e., $I_{y-y} = I_{CG} + w d^2$ where d is the perpendicular distance in inches between the CG and the hinge axis.

e. The dynamic balance coefficient is then equal to K/I for the X and Y axes assumed.

f. It is sometimes found necessary to calculate the product of inertia (K_2) with respect to one set of axes (X_2 and Y_2) given the product of inertia (K_1) with respect to another set of axes (X_1 and Y_1) lying in the same plane. Referring to the figure:

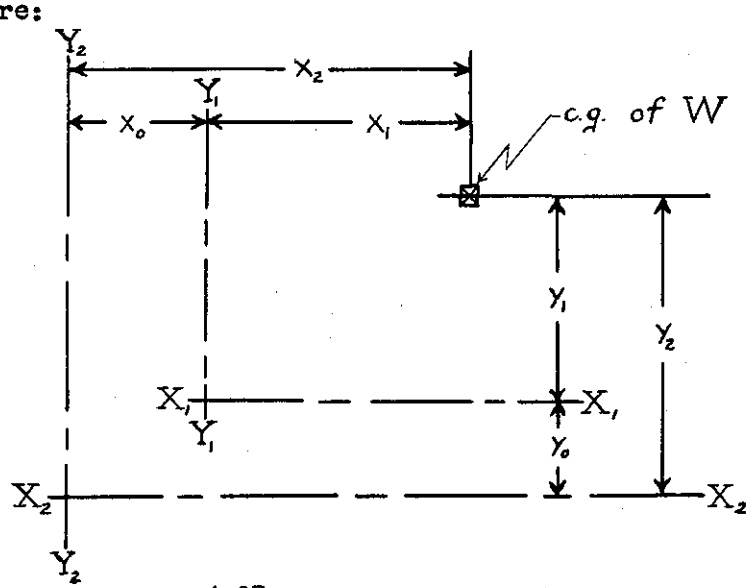

$$K_2 = K_1 + x_o\, y_1\, W + y_o\, x_1\, W + x_o\, y_o\, W$$

Where W = Total weight in lbs. and x_1 and y_1 are the coordinates (in inches) of the CG with reference to the X_1 and Y_1 axes respectively, and x_o and y_o are the distances (in inches) between the X axes and Y axes respectively.

It should be pointed out that in the case of statically balanced control surfaces (zero unbalance), the product of inertia (K) is independent of the true location of the axis of oscillation (X) but not of its direction.

5. Product of Inertia with Respect to Two Axes that are not Mutually Perpendicular. This case might occur for some wing bending versus aileron mode of vibration, with, for example, the relations shown in Figure 35B. As shown in ACIC #711, the product of inertia for the inclined axes (O-O and Y-Y) can be obtained from the perpendicular axes (X-X and Y-Y) value by the use of the following equation:

$$K_{oy} = K_{xy} \sin \phi - I_{y-y} \cos \phi$$

If ϕ is taken as the angle between the hinge axis and the axis of oscillation in that quadrant where the center of gravity of the surface is located, neglecting the inclination of the axes will be conservative if ϕ is acute; if ϕ is obtuse the result may be unconservative, especially if K is small compared with I.

6. Product of Inertia with Respect to Two Axes that are Parallel and in whose Plane the Control Surface CG is Located. This case may be of importance in some of the wing torsion versus aileron and fuselage bending versus rudder or elevator modes of vibration. Using the same nomenclature as in the previous cases where Y-Y is the hinge line of the control surface and X-X is the axis of oscillation of the body as shown in Figure 35C which represents a fuselage side bending versus rudder mode of vibration, then

$$K_{xy} = x_o\, x_1\, W + I_{y-y}$$

where:

x_o is the distance between the two parallel axes in inches.

x_1 is the distance of the CG of the control surface (including balance weights) from the hinge line in inches (aft of hinge is positive and forward is negative).

W is the weight of the control surface (including balance weights) in lbs.

I_{y-y} is the moment of inertia of the control surface (including balance weights) about the hinge line in lbs.-inches^2.

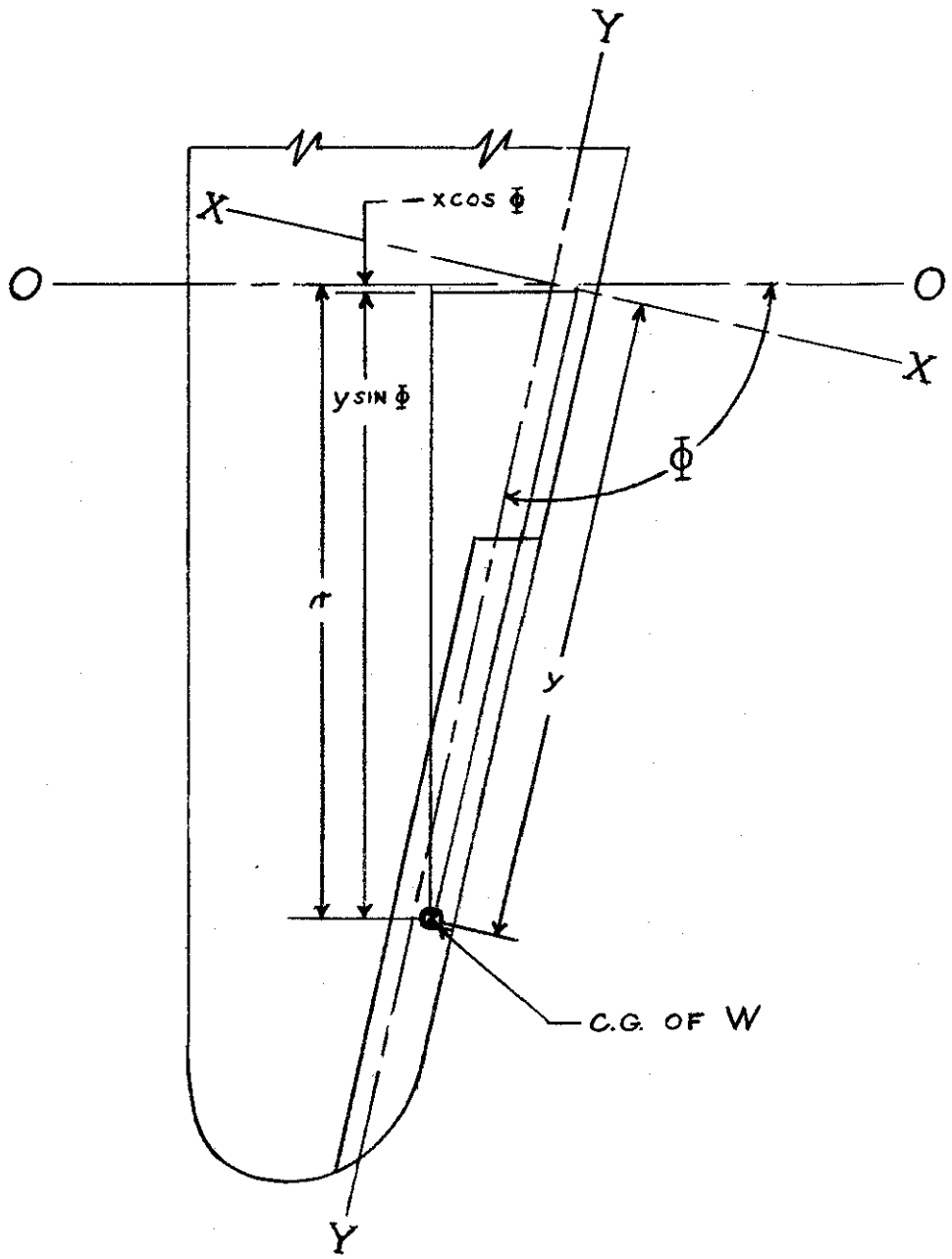

INCLINATION OF THE AXIS FOR A TYPICAL WING-BENDING VERSUS AILERON MODE OF VIBRATION.

301230 O—41——11

FIG. 35 B

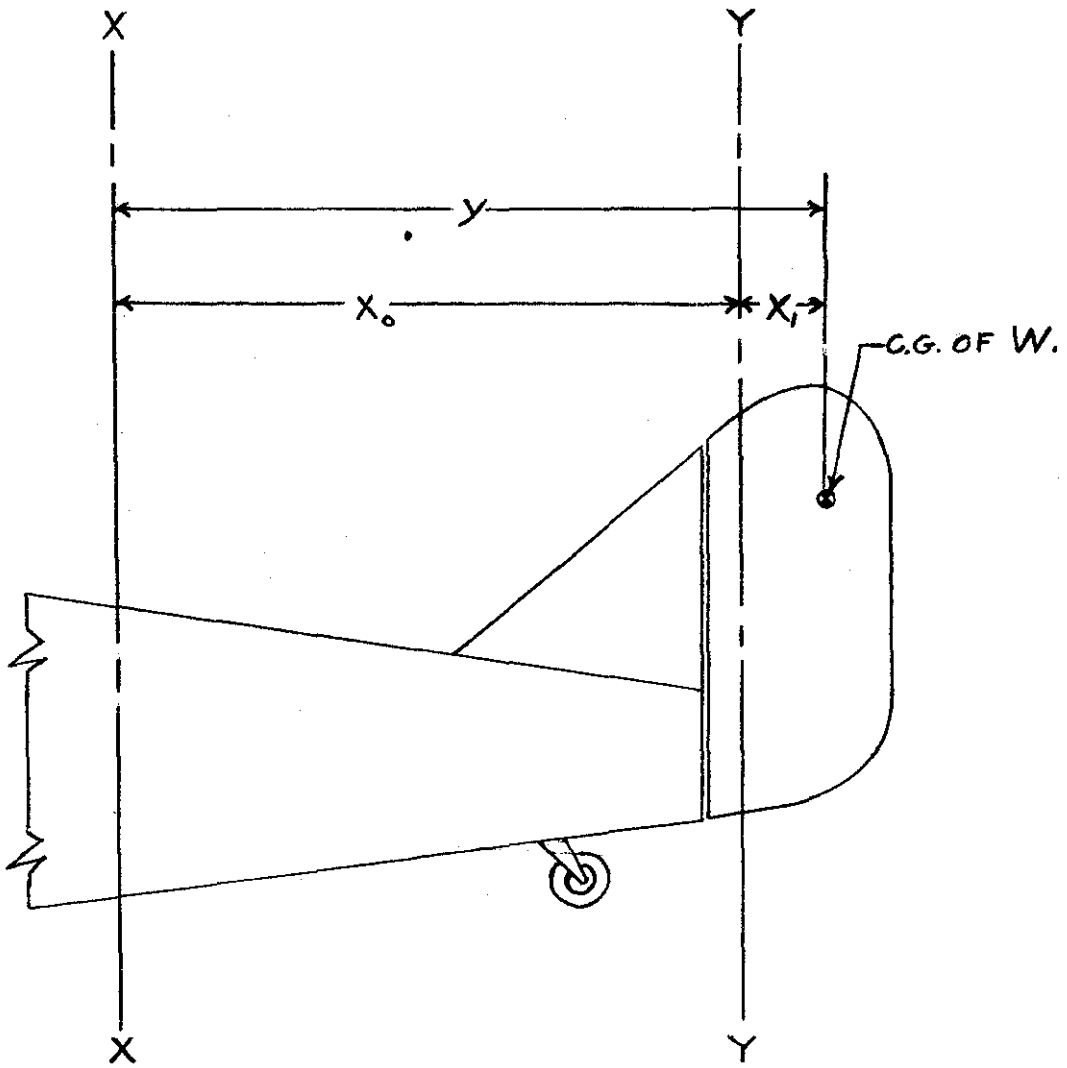

PARALLEL AXES FOR A TYPICAL FUSELAGE-BENDING VERSUS RUDDER MODE OF VIBRATION.

FIG. 35C

It is thus obvious that to make K equal to zero for this mode of vibration x_1 must be negative; that is, the center of gravity of the control surface must lie forward of the hinge line.

7. The special case of parallel axes wherein the control surface CG is located outside of the plane of the axes, may in most cases be resolved into the above parallel axes case (6) by projecting the X-axis to the plane through the control surface hinge resulting in a new X'-axis and resolving the CG reaction into components perpendicular and parallel to this plane. This may only be done when it can be shown that the CG of the control surface falls in the new plane through the X' and Y-axes which will be found true for most rudders and elevators. However, for the aileron, as shown in Figure 35D, where the hinge axis is usually near the bottom of the surface resulting in the CG being above an X'-Y plane, it will be necessary to consider the components of the CG, since an appreciable unbalance may be present even with a statically balanced aileron, for the true oscillation mode involving rotation about the X-axis.

425 WING FLAPS

1. In addition to the usual air loads, flaps may be subjected to high local loadings from impact of water when the airplane is operated from wet fields, or when used on seaplanes. This is particularly true of low-wing installations.

2. Ground clearance of the flaps should be considered in the initial design stages, 12 inches being a reasonable minimum. Since flap travel may be varied before final approval in order to secure the desired flight-path, trim, or landing characteristics, the maximum expected travel should be used when determining clearance.

426 TABS

1. Minimum deflections and play are of first importance in the installation of these surfaces. Strength of the surface and anchorage should be sufficient to prevent damage or misalignment from handling. This is particularly true of thin sheet tabs which are set by bending to the proper position. See also CAM 04.424.

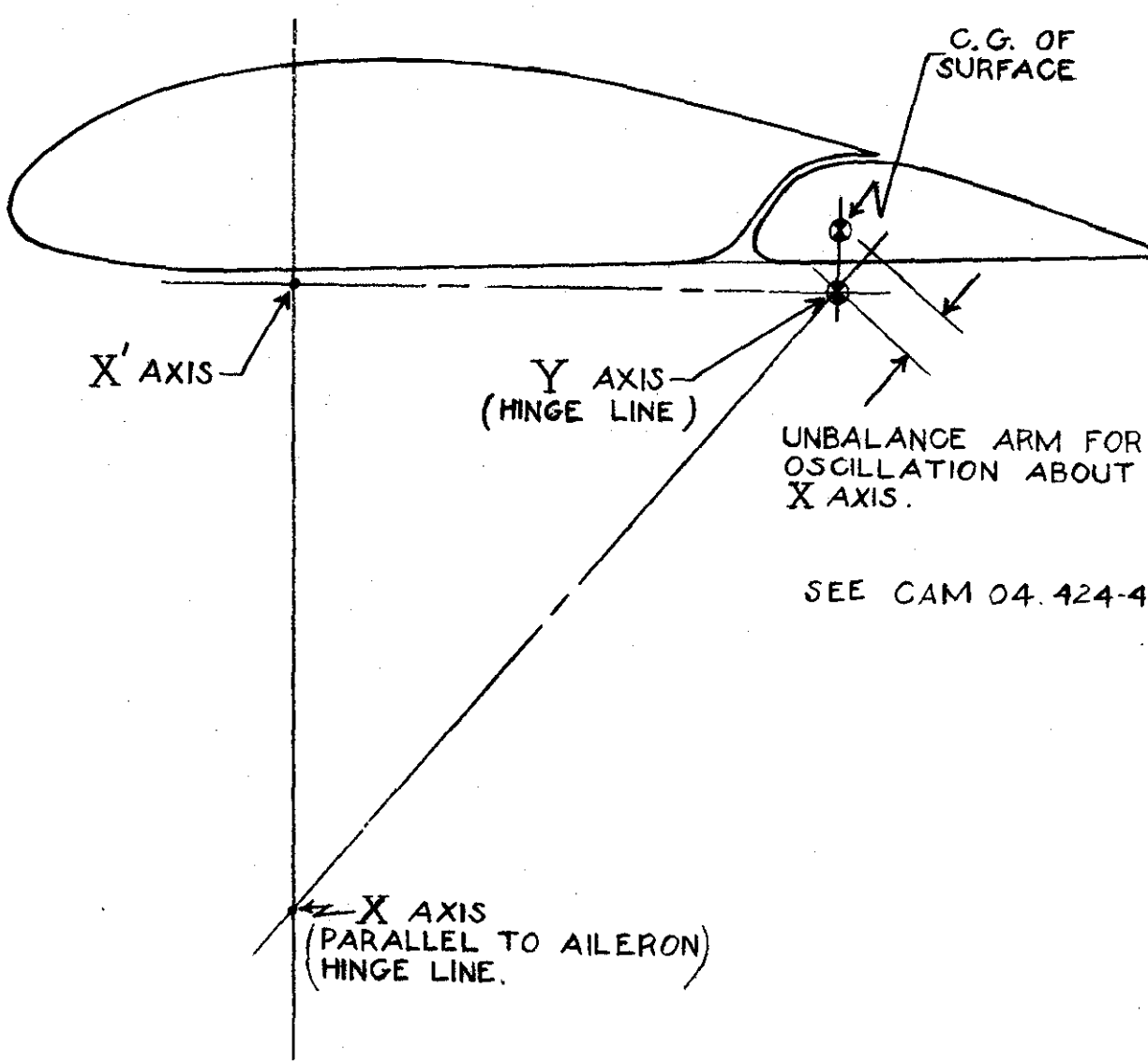

PARALLEL AXES WITH THE CONTROL SURFACE C.G. OUTSIDE THE PLANE OF THE AXES.

FIG. 35D

43 DETAIL DESIGN OF CONTROL SYSTEMS

1. General. The movements of horns, cables and other components with respect to each other should be such that there is no excessive change in system tension throughout the range. Adjustable stabilizer-elevator combinations, in particular, should be checked for this condition. Pulley guards should be close fitting to prevent jamming from slack cables since wide temperature variations will cause rigging loads to vary appreciably. The design of the pulley brackets should be such that the pulley lies in the plane determined by the cable. Allowable tolerances in manufacturing should not permit the cable to rub against the pulley flanges.

2. Travel. The travel of the primary control elements is generally dependent on the size of the aircraft. Stick travel at the grip may vary from 18" x 18" total to much smaller values for light aircraft. Angular travel of the control wheel from neutral may vary correspondingly from 270° to 90°. A usual value of pedal travel is 6" total. There is a trend toward adjustment for variations in stature of the pilot, either in the seat or at the controls.

3. Positioning. In the layout and positioning of a control consideration should be given to its relative importance and to its convenient placement for the usual sequence of operations. Thus for landing, it is desirable that throttle, propeller pitch control, flap control, and brakes be operable without changing hands on the wheel or stick. Likewise secondary controls such as fuel valves, extinguishers, and flares should be so located that the possibility of accidental or mistaken operation is remote.

4. Centering Characteristics. A point sometimes overlooked is the effect of the weight of a control member or of a pilot's arm or leg on the centering characteristics of the control. For instance, resting the hand on a stick grip in which the fore and aft axis is not directly below the grip will tend to apply aileron. Likewise rudder pedals on which the whole foot is rested and which have their hinge line below the pedal will tend to move away from center.

5. Cables. Control cables should be of the 6 x 19 or 7 x 19 extra flexible type, except that 6 x 7 or 7 x 7 flexible cable is acceptable in the 3/32 inch diameter size and smaller provided that particular care is taken to prevent wear. Cable smaller than 3/32 inch diameter should not be used in primary control systems, except that smaller sizes may be used for tab control systems where, in the event of cable failure, it is demonstrated that the airplane can be safely controlled in flight and landing operations. (See the following paragraph 7 regarding the use of fairleads.) For properties of control cable see Table 4-14 of ANC-5. End splices should be made by an approved tuck method such as that of the Army and Navy, except that standard wrapped and soldered splices are acceptable for cable less than 3/32 inches in diameter. Approved swaged-type terminals are also acceptable. It should be remembered that cable sizes are governed by considerations of control system deflection as well as by strength requirements, particularly when long cables are used.

6. Spring type connecting links for chains have been found to be not entirely satisfactory in service. It is advisable that a more reliable means, such as peening or cotter pins, be employed.

7. Fairleads should be used to prevent cables, chains and links from chafing or slapping against parts of the aircraft, but should not be used to replace pulleys as a direction-changing means. However, where the cable load is small, and the location is open to easy visual inspection, direction changes (through fairleads) not exceeding 3° are satisfactory in primary control systems except when 3/32 inch diameter cable is used. (See paragraph 5.) A somewhat greater value may be used in secondary control systems. Because of its corrosive action on cables, rawhide should not be used for fairleads or chafing strips.

8. When using extreme values of differential motion in the aileron control system or a high degree of aerodynamic balance of the ailerons, the friction in the system must be kept low, otherwise the ailerons will not return to neutral and the lateral stability characteristics will be adversely affected. This is particularly true when the ailerons are depressed as part of a flap system, in which case there may even be definite overbalance effects.

9. Adjustable stabilizer controls should be free from "creeping" tendencies. When adjustment is secured by means of a screw or worm, the lead angle should not exceed 4° unless additional friction, a detent, or equivalent means is used. In general, some form of irreversible mechanism should be incorporated in the system, particularly if the stabilizer is hinged near the trailing edge.

10. Dual control systems should be checked for the effects of opposite loads on the wheel or stick. This may be critical for some members such as aileron bell crank mountings in an "open" system, i.e., no return except through the balance cable between the ailerons. In addition, the deflections resulting from this long load path may slack off the direct connection sufficiently to cause jamming of cables or chains unless smooth close-fitting guards and fairleads are used.

11. It is essential that control systems, when subjected to proof and operation tests, indicate no signs of excessive deflection or permanent set. In order to insure that the surfaces to which the control system attaches will retain their effectiveness in flight, the deflection in the system should be restricted to a reasonable limit. As a guide for conventional control systems, the average angular deflection of the surface, when both the control system and surface are subjected to limit loads as computed for the maneuvering condition neglecting the minimum limit control force but including tab effects, should not exceed approximately one-half of the angular throw from neutral to the extreme position. (See CAM 04.42-1)

12. It is essential that when a nose wheel steering system is interconnected with the flight controls care be taken to prevent excessive loads from the nose wheel overstressing the flight control system. This objective may be attained by springs, a weak link, or equivalent means incorporated in the nose wheel portion of the control system.

13. Power Boost Controls. Such controls should exhibit control force versus surface deflection curves which are smooth and free from discontinuities. (See also CAR 04.75120.) Consideration should be given in the design and in test to the effects of the temperature variation to be expected in operation, in order to avoid the possibility of jamming or excessive lag. Small changes in valve adjustments or other settings should not result in marked changes in operating or control characteristics.

.431 STOPS

1. Although the location of stops within the control system is not specified, they should preferably be located close to the operating force in order to avoid a "springy" control. As noted in CAM 04.421, additional stops may in some cases be needed at the surfaces. Stops should be adjustable where production tolerances are such as to result in appreciable variation in range of motion.

.432 JOINTS

1. Bolts, straight pins, taper pins, studs, and other fastening means should be secured with approved locking devices. (See CAM 04.4020) Rivets should not be subjected to appreciable tension loads.

2. The assembly of universal and ball and socket joints should be insured by positive locking means, rather than by springs. In addition the angular travel of such joints should be limited by system stops rather than by accidental interferences which may induce extremely high stresses in the joints.

3. Woodruff keys should not be used in tubing unless provision is made against the key dropping through an oversize or worn seat.

.434 FLAP CONTROLS

1. Undesirable flight characteristics, such as loss of lift and consequent settling, may result from too rapid operation of flaps which give appreciable lift. When the prime function of the flap is to act as a brake, however, slow operation is not so important. When flaps extend over a large portion of the span the control and means of interconnection should be such as to insure that the flaps on both sides function simultaneously.

.435 TAB CONTROLS

1. In addition to the air loads, consideration should be given in the design to the lapping effect of dust and grease on fine threads, deflections of the tab due to the small effective arm of the horn or equivalent member, and vibration common to the trailing edge portion of most movable surfaces.

2. It is advisable to avoid a tab control with small travel because of the resulting abrupt action of the tab.

.437 SINGLE-CABLE CONTROLS

1. Single cable controls refer to those systems which do not have a positive return for the surface or device being controlled. Rudder control systems without a balance cable at the pedals are considered satisfactory if some means such as a spring is used to maintain cable tension

and to hold the pedals in the proper position. It should be noted that it is not the intent of the specified requirement to require a duplication of cables performing the same function.

.44 DETAIL DESIGN OF LANDING GEAR

1. The wheel travel should be ample for the service and requirements involved. The geometric arrangement of members in the landing gear should be such that the wheel travel in the direction of the resultant external force will be adequate. See CAM 04.440-1. Extremely high heat treats, particularly when combined with thin sections, are usually sources of trouble in service. An ultimate strength of 180,000 pounds per square inch may be regarded as a usual upper limit, except in special cases. To prevent binding and scoring in shock absorbers it is desirable to keep bending deflections, and bearing stresses at pistons, packing glands and bearings, at low values.

2. In general the purpose of unconventional gear is to facilitate landing under unfavorable conditions. In order to realize this purpose it is advisable that the energy absorption capacity be in excess of that needed for conventional gear.

.440 SHOCK ABSORPTION

1. In order to obtain adequate energy absorption without exceeding the specified load factors it is essential to provide sufficient wheel travel. Neglecting the effect of tire and structural deflection, it may be shown that:

$$t = \frac{h}{n\eta - 1}$$

t = component of wheel travel in the direction of the resultant external force.
h = specified height of drop,
n = load factor, and
η = absorber efficiency.

Thus when a certain height of drop h must be met without exceeding a load factor n, the recommended minimum wheel travel for any absorber efficiency may be computed. While absorber efficiencies as high as .85 have been developed, it should be noted that such shock absorbers tend to give bouncing and undesirable taxiing characteristics. This may be obviated by ample travel in combination with an absorber which does not develop high loads in the first part of travel but rather "builds-up" gradually to a peak load only when near the fully deflected position. In such cases, an efficiency of .60 to .70 may be expected. The effect of the tire in altering the above relationship will in general not be large because, while it provides additional energy absorption, its deflection increases the energy to be dissipated. Structural deflection while not usually of importance, may in some cases appreciably reduce load factors.

.443 A wheel appended to a previously approved tail skid installation will not be classed as a "landing gear wheel". See CAM 04.060-2 for an acceptable procedure of use in making such a change.

.444 RETRACTING MECHANISM

1. The requirement of a visual position indicating means may usually be met by mechanically or electrically operated indicators. When windows or other openings are so placed that it is possible for the pilot to note directly the position of the wheels, a separate visual indicator is not required. In such cases, however, it is essential that illumination be provided for night operation. When it is necessary for latches to operate before the gear will carry landing loads, lights or other means should be used to indicate completion of this operation. In the case of amphibians the requirement in CAR 04.444 regarding aural indicators does not apply. With this type of airplane it is usually more important to guard against the possibility of alighting on the water with the wheels down.

2. In the design of retracting systems, the source of most service troubles lies in such items as latches (particularly if spring loaded), limit switches, valves, cable installations, universal joints, and indicating systems. The effects of mud, water, ice and extreme temperature variations should be studied.

3. In manually operated systems it is desirable that the crank or lever forces not exceed 15 to 20 pounds. Further, about sixty 12 inch strokes per minute is a practical maximum. Hence the total work input for operation varies with the time. To keep this at a reasonably low value, it is therefore important that losses be kept small. With larger and heavier gear the use of a bungee may be necessary.

.4440 The usual reduction ratios of screw and nut, and of worm and worm wheel combinations, are considered to provide irreversibility. Detents or other means should be provided however if there is appreciable creeping. Some types of swinging arms which move slightly past dead center to a position against a stop are also acceptable, but the effect of bouncing on landing should be considered.

.45 HULLS AND FLOATS

1. General practice in the design and construction of floats and hulls is well established. Rivet spacing for watertight joints is substantially closer than required for structural strength. The same applies to spacing of spot welds. Drain holes should be positioned at stringers, transverse frames, and other members so that water will drain to the low point without being trapped in pockets at inaccessible points. Adequate inspection openings should be provided. When the bottom is curved in transverse section there may be high loads acting inward at the chine between frames due to the tension in the bottom plating.

2. Due to the severe nature of the loads imposed by water operation, consideration should be given to the effect of sharp impacts and racking loads. Particular attention should be paid to fittings, and, in twin float seaplanes, to trusses and members carrying unsymmetrical loads.

.450 BUOYANCY (MAIN SEAPLANE FLOATS)

1. It should be noted that Canadian requirements specify that twin-float seaplanes shall have at least 100 per cent reserve buoyancy in the floats. See also CAM 04.451.

.451 BUOYANCY (BOAT SEAPLANES)

1. Any of the methods common to naval architecture may be used to demonstrate compliance with buoyancy requirements. Bulkheads should be watertight at least 18 inches above the water line being considered. Acceptable substitutes for watertight doors in bulkheads are sills or sections which may be slid or set into place. These should likewise extend at least 18 inches above the waterline considered, and should be quickly installable. Bulkheads should possess ample strength to withstand hydrostatic loads with some reserve for surges. Cables in the hull should not be carried below the waterline due to the impracticability of sealing at watertight bulkheads. Watertight closed compartments should be vented to a point well above the waterline and consideration should be given to air pressure variation at the venting point.

.452 WATER STABILITY

1. The methods employed in naval architecture may be used to demonstrate compliance with the stability requirements. In some cases this compliance has been shown by assymetric loading of the aircraft on the water. Computations are acceptable but with certain types of seaplanes, such as those incorporating seawings, the use of metacentric height as a criterion becomes meaningless due to variation with list and loading. Recourse must then be made to methods such as Bonjean curves or the homogenous mass method to demonstrate the existence of adequate righting moments. For a further discussion of methods see texts such as "The Naval Construction" by Simpson, "Theoretical Naval Architecture" by Attwood, and "Engineering Aerodynamics" by Diehl. Note that the Canadian requirements for twin float seaplanes specify that the metacentric height shall not be less than the following values:

Transverse metacentric height = $4\sqrt[3]{D}$ ft, and

Longitudinal metacentric height = $6\sqrt[3]{D}$ ft, where

D = total displacement of the seaplane in cubic feet.

4632 OPERATION LIMITATIONS AND INFORMATION

Satisfactory means of informing operating personnel of necessary operation limitations and information are outlined below:

1. Instrument marking should be used for:

   a. Airspeed not to be exceeded in glide or dive.
   b. Airspeed not to be exceeded in level flight or climb.
   c. Airspeed not to be exceeded with flaps extended.
   d. R.P.M. not to be exceeded in take-off.
   e. R.P.M. not to be exceeded in climb.
   f. R.P.M. not to be exceeded in all other operations.
   g. Manifold pressure not to be exceeded in take-off.
   h. Manifold pressure not to be exceeded in climb.
   i. Manifold pressure not to be exceeded in all other operations.

When airspeed indicators, tachometers, and manifold pressure gauges are so marked, the coloring outlined below should be used:

   a, d, g - to be marked in "red".
   b, e, h - to be marked in "yellow".
   c, f, i - to be marked in "green".

2. Acceptable methods of marking include:

   a. Pointers, adjustable on the ground only.
   b. Sectors or lines properly marked and outlined on the face of the dial, under the glass.
   c. Lines painted on the glass face of the instrument when a or b above is impracticable and when the glass is adequately secured against rotation. Such lines should be painted over a suitably etched or scratched line on the glass itself. This etching or scratching is considered advisable for more serviceable markings.

3. When considered necessary by the Authority, operating information and limitations such as the following should be included in a manual, or its equivalent, which must be carried in the pilot's compartment and be accessible at all times:

   a. Emergency ceiling and conditions under which it may be obtained.
   b. All other information or limitations considered necessary by the Administration to properly inform operating personnel of the conditions necessary for operation in compliance with the Civil Air Regulations.

04.

APPENDIX I

AN INTERPRETATION OF CAR 04.003 FOR THE CASE OF LARGE AIRPLANES

A GENERAL

1. Since, as stated in CAM 04.00 , the present CAR 04 requirements are based largely on experience with airplanes weighing less than 30,000 pounds, it is realized that certain of these requirements cannot logically be applied to larger and larger aircraft without involving either the danger of inadequate rules or the disadvantage of too severe requirements. It is therefore essential that, during the initial stages of the design of such airplanes, the designer contact the Administrator for special rulings which will be made for the particular design involved. It is likewise essential that very close cooperation be maintained between the designer and the Administrator throughout the design period and until the completion of the airplane.

2. Although it is impossible to anticipate all of the new airworthiness problems involved in the design of large aircraft, the modifications to CAR 04 which are outlined in the following sections are considered to be generally applicable to such aircraft. If cases arise in which there is doubt as to their applicability to a particular project, the designer is of course at liberty to employ alternative modifications, provided that such modifications are substantiated. This appendix will be revised from time to time as new modifications are adopted.

B STRUCTURAL LOADING CONDITIONS

1. Design Gliding Speed. (See CAR 04.211). A V_g of less than 1.25 V_L is in general believed inadequate. This factor may, however, be reduced if it is shown that the resulting placard maximum speed suffices for all the contingencies which may arise in operations. It is suggested that a polar diagram be plotted, showing the flight paths, indicated air speeds, and rates of descent, with zero thrust and with cruising power. This will assist in determining the adequacy of the design gliding speed proposed.

2. Maneuvering Load Factors. (See CAR 04.2120). Although large airplanes are generally less maneuverable than smaller ones, they are also, in many cases, less controllable after a maneuver has been begun, either advertently or inadvertently. Pending the development of more rational maneuvering load factor criteria for such airplanes, it is believed that the minimum limit maneuvering load factors of + 2.67 and - 1.333 should be used at all speeds up to V_g.

3. Gust load factors. (See CAR and CAM 04.2121.) Positive and negative values of U of 30 feet per second (limit) should be used in Condition I (CAR 04.2131) and Condition II (CAR 04.2132). The resulting gust load factors should also be used for Condition III and IV respectively.

4. Horizontal Tail Surfaces. (See CAR 04.221). A 30 foot gust should be used for the design of the horizontal surfaces at V_L. The effects of downwash on the horizontal tail may be allowed for. More definite information on this can probably be obtained from the NACA. The question of maneuvering loads is difficult to decide at present. The existing requfrements may be satisfactory, but should not be relied on as final. A rational study of the specific case involved, based on the maximum deflection likely to be used at Vp, may lead to more applicable normal force coefficients than those specified by CAR 04.2211.

5. Ailerons. (See CAR 04.223). It is suggested that the maximum deflection likely to be used at Vp be taken as a criterion for aileron design loads. This will involve an investigation of aileron loadings based on normal force coefficients and pressure distribution data.

6. Wing Flaps. (See CAR 04.211, 04.214, and 04.244). The present requirements for flap design speeds can probably be lowered to 1.67 V_{sf} (placard 1.5 V_{sf}) provided that gust velocities of + 30 and - 30 feet per second are used in Conditions VII (CAR 04.2141) and VIII (CAR 04.2142) respectively. If partial deflections are to be used at higher speeds an additional investigation is necessary.

7. Loads on Sea Wings. No strength requirements have been formulated for sea wings. The suitability of such installations will be determined by operating tests. It should be borne in mind, however, that water is approximately 800 times as dense as air and that sea wings and floats are therefore subjected to very high loads and pressures when they encounter waves in landing or on take-off. The manufacturer proposing to use sea wings should substantiate the loading conditions chosen for their design.

C PROOF OF STRUCTURE

1. Effects of Size. It appears that existing airplane structures have just about reached the limit of safe extrapolation from previously approved structures and that further increase in size introduces an element of uncertainty difficult to remove. In view of the serious nature of this situation it is suggested that designers prepare a comprehensive outline of the general methods of strength analysis to be used on wings, fuselages and hulls, and of the specimen tests which will be made to supplement the analysis. This material should be submitted to the Administrator as early in the design stages as is practicable. It is apparent that a thorough study of this situation is necessary if the Administrator is to avoid requiring high margins of safety which will impair the efficiency of the airplane. Otherwise it may be necessary to conduct destruction tests of complete components.

2. Wing Analysis. In preparing the program mentioned in 1 above, the following points should be considered:

a. Determination of the magnitude and distribution of stresses due to bending and torsion.

b. Determination of allowable compressive loads in wing covering.

c. Allowable shear loads in webs.

d. Combined loadings.

e. Specimen tests, panel tests, and partial wing tests.

f. Ultimate factors of safety. These may be increased over the present required values if there appears to be uncertainty as to the reliability of the strength analysis and test methods).

3. Fuselage and Hull Analysis. A program such as outlined for wings in item 2 above should be submitted. In particular, information should be included as to the strength of main and intermediate frames; the rigidity of intermediate frames and their adequacy in regard to the prevention of general instability; the strength of the side covering in shear; the strength of vertical and longitudinal stiffeners as affected by diagonal tension fields; the effectiveness of the covering in compression, and the effects of cutouts and discontinuities.

D DETAIL DESIGN

1. Flutter Prevention. Before the design has progressed very far, the Administrator should be informed as to all design features and precautions to be used to prevent flutter. Unusually large cantilever spans, and outboard vertical tail surfaces, may necessitate special precautions.

2. Control Systems. If a power control system is used, it will probably be required that certain minimum maneuvers can be performed after the power source has failed.

3. Exits. In view of the large size of the compartments, it is felt that consideration should be given to supplying emergency exits on each side and at the top of each major compartment.

APPENDIX II

(Sample Weight and Balance Report)

NAME OF MANUFACTURER

REPORT NO.___

WEIGHTS AND BALANCE
OF MODEL _____.

SERIAL NO. _____

IDENTIFICATION MARK _____

Date _____.

Prepared By _____
Checked By _____
Witnessed By _____
(Signature of Civil
Aeronautics Administration
Representative)

301230 O—41——12

Section 1. Aircraft Empty Weight

(A) Empty weight as weighed (in level landing position**)

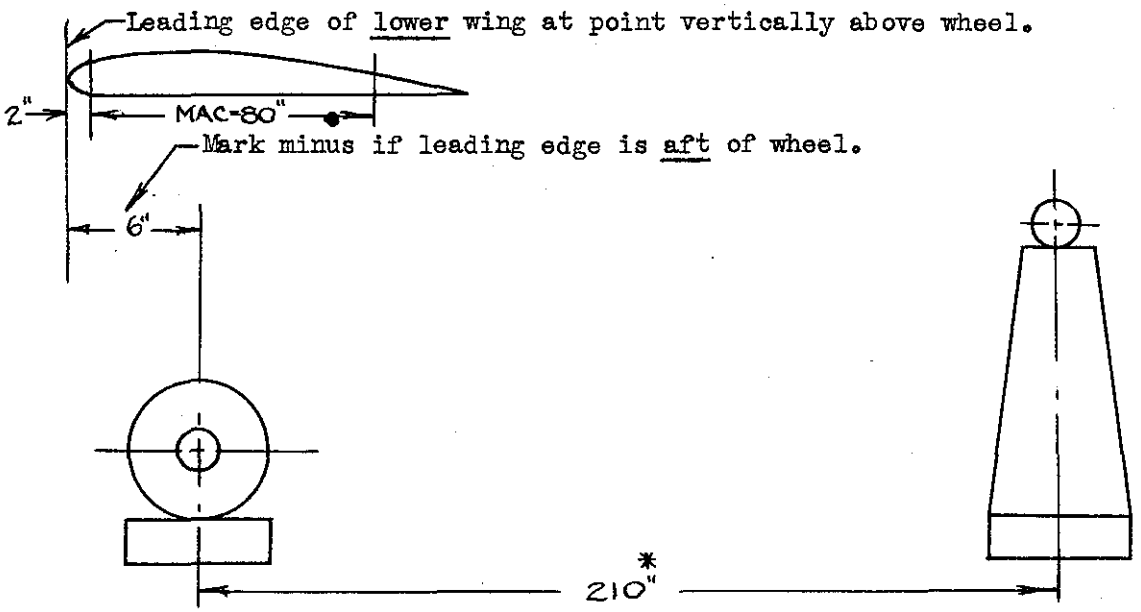

	Scale Reading	Tare	Net
Left Wheel	1020	15	1005 lbs.
Right Wheel	1010	15	995 lbs.
Tail Wheel	400	150	250 lbs.
		Total	2250 lbs.

Total net empty weight includes residual oil. The oil tank was filled and the system drained before weighing. 5 gallons of oil were drained from the system.

C.G. Empty (as weighed) is aft of wheel centerlines $\frac{250 \times 210}{2250}$ = 23.3"

C.G. Empty (as weighed) is aft of lower wing leading edge 23.3 + 6 = 29.3"

Lower wing leading edge is aft of datum 100.0"

C.G. Empty (as weighed) is aft of datum 100 + 29.3 = 129.3"

Datum to M.A.C leading edge = 102" (See page 2 of Report 981)

* Measured along floor with aid of a plumb-bob.

** Level by means provided in accordance with CAR 04.91.

(B) Empty weight as weighed includes the following:

(1) Class I Equipment*

Item No.***	Name	Weight**
10	Starter	21
11	Battery	40
12	Heater	2
13	Ventilator	4
14	Generator	20
15	Position lights	--
16	8.50-10 wheels (Mfr. and model) and 8.50-10 6-ply tires --	Weights not required except when optional wheels are used.
17	10 1/2 in. streamline tail wheel --	
6	Instruments not required (list)	

(2) Items for which approval as Class II or Class III OPTIONAL equipment is desired (and test equipment):

		Weight** (Net increase)	Hor. Arm from Datum	Hor. Moment
7	Wheel streamlines	24	71	1704
19	Flares (Type)	17	175	2975
4	Adj. metal prop. 70 lbs. (Class I prop. is wood 46 lbs.)	24	13	312
6	Optional instruments not required (list)	15	60	900
20	Optional fuel capacity 70 gals. (2 tanks at 35 gals.) (Class I capacity includes 2 tanks at 25 gals. 33 lbs.)	15	90	1350
21	Radio			
	Receiver (Type) and antenna	30	60	1800
	Shielding (Type)	10	16	160
	Bonding	10	50	500
5	Ballast container and straps, etc.	20	138	2760
	Total optional	165		12461
(3)	Empty weight as weighed	2250	129.3	290925
	Optional Equipment	-165		-12461
	Basic empty weight	2085	X_E	278464

$X_E = \frac{278464}{2085}$ = Distance from datum to C.G. of airplane empty with all Class I items only.

* "Class I Equipment" (See CAM 04.0322). List all such items even though weights are not included for some.

** All weights of equipment are installation weights. When weight listed is net increase over Class I equipment, list weights for both as noted for propeller and fuel tanks above (items 4 and 20).

*** Item Numbers to correspond with numbers used in Balance Diagram.

Section 2 - Most Forward C.G. Load Condition

(A) Loading as actually flown:

Item No.	Name	Weight	Hor. Arm	Hor. Moment
	Empty weight as weighed	2250	129.3	290925
1	Oil 5 gals.	38	51	1938
2	Fuel 20 gals.	120	90	10800
3	Pilot + parachute	225*	90	20250
4	Propeller (If other than noted in Section 1(B))			
5a	Ballast (incl. containers, straps, etc.)	100.	60	6000
	Totals	2733	120.8	329913
	Datum to M A C leading edge	102	102	

Per cent of M A C $18.8 \div 80(MAC) = 23.5\%$

Inches aft of leading edge of wing $120.8 - 100 = 20.8$ in.

(B) Loading substantiated by 2(A):

	Basic empty weight	2085	X_E	278464
1.	Oil 5 gals.	38	51	1938
2.	Fuel 70 gals.**	420	90	37800
3.	Pilot***	170	90	15300
3.	Passengers (in front seat)	170	90	15300
3.	Parachutes in front seats (2 at 20 lbs.)	40	90	3600
4.	Propeller (heaviest to be used)(70-46)	24	13	312
6.	Optional instruments	15	60	900
7.	Wheel streamlines	24	71	1704
21.	Radio equipment forward of most forward C.G. limit Plus other items of optional equipment critical for most forward C.G. load condition for which approval as Class III equipment is desired.			
	Totals	W_F	X_F****	M_F

NOTES ARE PERTINENT TO BOTH SECTION 2 AND 3.

* Actual weight of pilot and parachute shall be used in Sections 2(A) and 3(A) instead of standard weight of 190 lbs. (170 + 20).

** Fuel substantiated shall be as follows: (See CAR 04.7211)
(a) 1 gal. for every 12 MAXIMUM EXCEPT TAKE-OFF horsepower when minimum fuel is critical.
(b) Full tanks when maximum fuel is critical.

*** When controls are arranged in tandem and the aircraft can be flown from either position, Section 2(B) will include the pilot in the front cockpit. Similarly, Section 3(B) for the most rearward C.G. condition will include the pilot in the rear cockpit. (Otherwise the airplane must be placarded accordingly).

**** Shall not exceed limits in 2(A) and 3(A).

Section 3 - Most Rearward C.G. Load Condition

(A) Loading as actually flown:

Item No.	Name	Weight	Hor. Arm	Hor. Moment
	Empty weight as weighed	2250	129.3	290925
1	Oil 5 gals.	38	51	1938
2	Fuel 20 gals.	120	90	10800
3	Pilot and Parachute	225*	90	20250
4	Propeller (If other than noted in Section 1(B))			
5b	Ballast (incl. containers, straps, etc.)	200	250	5000
	Totals	2833	132	373913

Datum to M A C leading edge 102

Per cent of M A C 30 ÷ 80(MAC) = 37.5%

Inches aft of leading edge lower wing 132 - 100 = 32.0 in.

(B) Loading substantiated by 3(A):

	Basic empty weight	2085	X_E	278464
1.	Oil 5 gals.	38	51	1938
2.	Fuel $\frac{240}{12}$ = 20 gals.**	120	90	10800
3.	Pilot***	170	90	15300
4.	Propeller (lightest to be used) included in basic empty weight	no net increase		
6.	Flares (Type)	17	175	2975
7.	Radio equipment aft of most rearward C.G. (Passengers in rear seat are at arm of 125. If aft of 132 the rear passengers and parachutes should be included here)			

Plus other items of optional equipment critical for most rearward C.G. load condition for which approval as Class III optional equipment is desired.

Totals $\overline{W_R}$ $\overline{X_R}$**** $\overline{M_R}$

NOTES ON PAGE 5 ARE PERTINENT TO SECTION 3 ALSO.

Section 4 - Full load condition

(A) Loading as actually flown:

(Same form as 2(A) and 3(A))

APPENDIX III

BIPLANE WING LIFT COEFFICIENTS

Reprinted from Air Commerce Bulletin
November 15, 1934

Two N. A. C. A. Technical Reports [1] embody a complete exposition of the latest available information as to the effects on the individual wing lift coefficients of stagger, wing thickness, gap, decalage, overhang, unequal chords, and unequal effective areas. The purpose of this paper is to present in summarized form a simplified practical solution for C_{L_u} and C_{L_L} based on the data of these reports, except for certain practical compromises and the elimination of an inconsistency as noted later.

First are listed the known cellule and wing characteristics, followed by computations and references to the figures of this paper in the order corresponding to the quickest solution. A sample computation parallels the general presentation.

Given:

b_u=40 ft. Overall span of upper wing.

b_L=20 ft. Overall span of lower wing.

b'_u=40 ft. Net span of upper wing (overall less fuselage cut-out).

b'_L=17.4 ft. Net span of lower wing (overall less fuselage cut-out).

S_u=300 sq. ft. Gross area of upper wing.[2]

S_L=76 sq. ft. Gross area of lower wing.[2]

S'_u=300 sq. ft. Net area of upper wing (gross less cut-outs).

S'_L=64 sq. ft. Net area of lower wing (gross less cut-outs).

c'_u=7.5 ft.=S'_u/b'_u. Mean geometric chord of upper wing.

c'_L=44 in.=S'_L/b'_L. Mean geometric chord of lower wing.

G=66 in. Distance normal to zero lift direction.[3]

Stagger=44 in. Distance parallel to zero lift direction.[3]

t_L=6.6 in. Maximum thickness of c'_L.

δ=3. Decalage in degrees.

Solution:

t_L/G=.10=6.6/66

s=1.0=stagger/c'_L=44/44

A_1=.012 from figure III-4, function of t_L/G and s.

$$\frac{b_u-b_L}{b_u}=.50=\frac{40-20}{40}$$

$$F_1=.50=1-\frac{b_u-b_L}{b_u}$$

G/c'_L=1.5=66/44

B_1=−.0596 from figure III-2, function of G/c'_L.

C_1=−.015 from figure III-3, function of $\frac{b_u-b_L}{b_u}$

$$D=c'_L/c'_u=\frac{S'_L}{S'_u}\times\frac{b'_u}{b'_L}$$

$$=\frac{64}{300}\times\frac{40}{17}=.50$$

$$K_1=[F_1(A_1+B_1\delta)+C_1]D$$

$$=[.50(.012+3\times-.0596)+(-.015)].50$$

$$=-.049$$

$$A_2=.050+0.17s=.050+0.17\times1$$

$$=.22$$

$$R=\frac{1}{2}\left[\frac{b_u^2}{S_u}+\frac{b_L^2}{S_L}\right]$$

$$=\frac{1}{2}\left[\frac{40^2}{300}+\frac{20^2}{76}\right]$$

$$=5.3$$

F_2=.76 from figure III-4, function of R and G/c'_L.

B_2=.0186

$(A_2F_2+B_2\delta)$=.22×.76+.0186×3

=.223

C_2=−.013 from figure III-5, function of $\frac{b_u-b_L}{b_u}$ and $(A_2F_2+B_2\delta)$

$$K_2=[(A_2F_2+B_2\delta+C_2)]D$$

$$=[(.233-.013)].50$$

$$=.105$$

$$E=4.68=S'_{u/S'_L}\pm300/64$$

$$C_{L_u}=(1+K_2)C_L+K_1$$

$$=(1+.105)C_L-.049$$

$$C_{L_u}=1.105C_L-.049$$

$$C_{L_L}=(1-K_2E)C_L-K_1E$$

$$=(1-.105\times4.68)C_L-(-.049\times4.68)$$

$$C_{L_L}=.508C_L+.23$$

When $C_L=0, C_{L_u}=-.049 C_{L_L}=.23$

When $C_L=1.0, C_{L_u}=1.056 C_{L_L}=.738$

Plot straight lines through these values in Fig. 11, page .1-10

Remarks: (1) It should be noted that the methods in T. R. 501 of correcting for overhang in figures 4 and 6 are incorrect in that K_{10}, K_{11} and K_{12}, as well as $F_2 \times K_{20}$ and K_{21}, should correspond to c_{L/c_u} equals unity, i. e.,

1. Relative Loading on Biplane Wings, by Walter S. Diehl, NACA T.R.458. Relative Loading on Biplane Wings of Unequal Chords, by Walter S. Diehl, NACA T.R. 501.
2. Assuming wings continuous from tip to tip.
3. Between mean aerodynamic centers of upper and lower wings as shown in Fig. III-6. (See also CAM 04.217-E).

equal chords. The correction for unequal chords should have been introduced later by multiplication of the values of K_1 and K_2 for equal chords by the ratio of geometric chords of the lower to upper wing.

(2) Gross areas are used only for the determination of the average aspect ratio.

(3) For the case of deflected flaps an equivalent decalage should be introduced.

(4) In a correct solution the derived straight lines for C_{L_u} and C_{L_L} will intersect at the corresponding value of C_L of the cellule.

(5) The use of the mean aerodynamic centers makes this method of solution applicable also to those cases where the wings incorporate sweep back and/or taper in plan form.

(6) Wings incorporating twist are a special problem not directly amenable to the procedure of this paper.

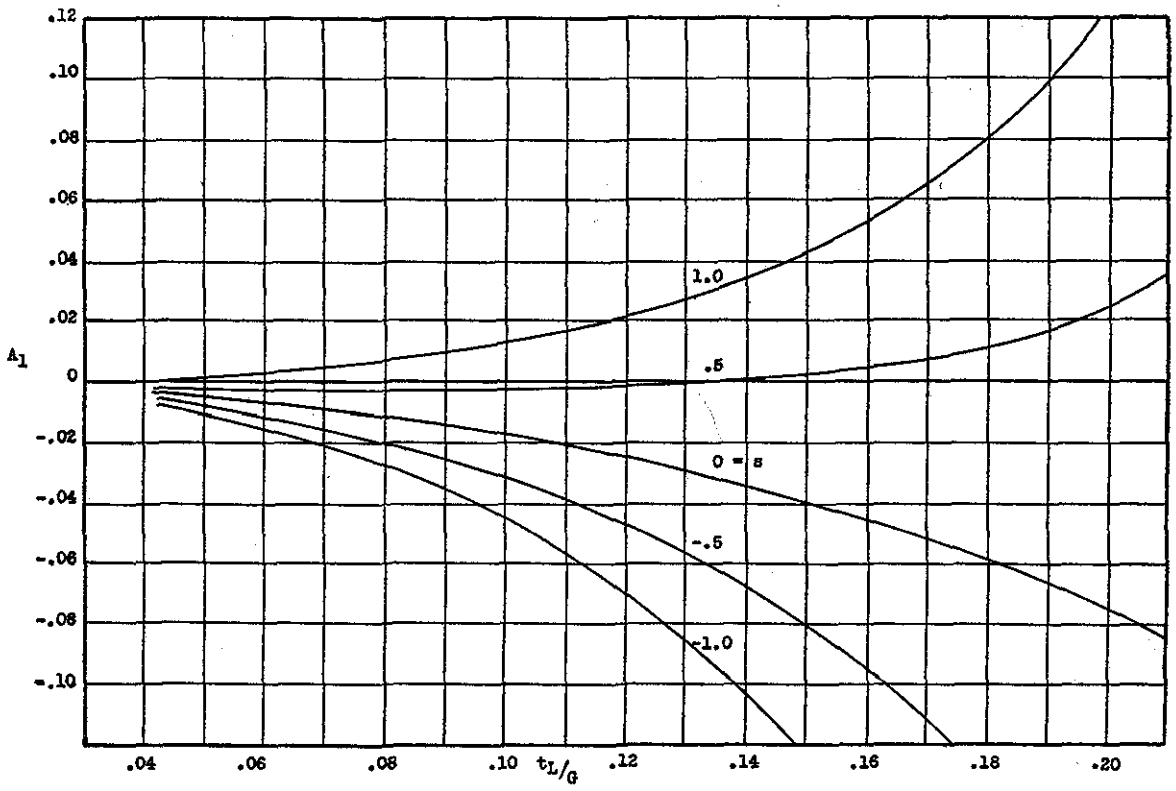

FIG. III-1

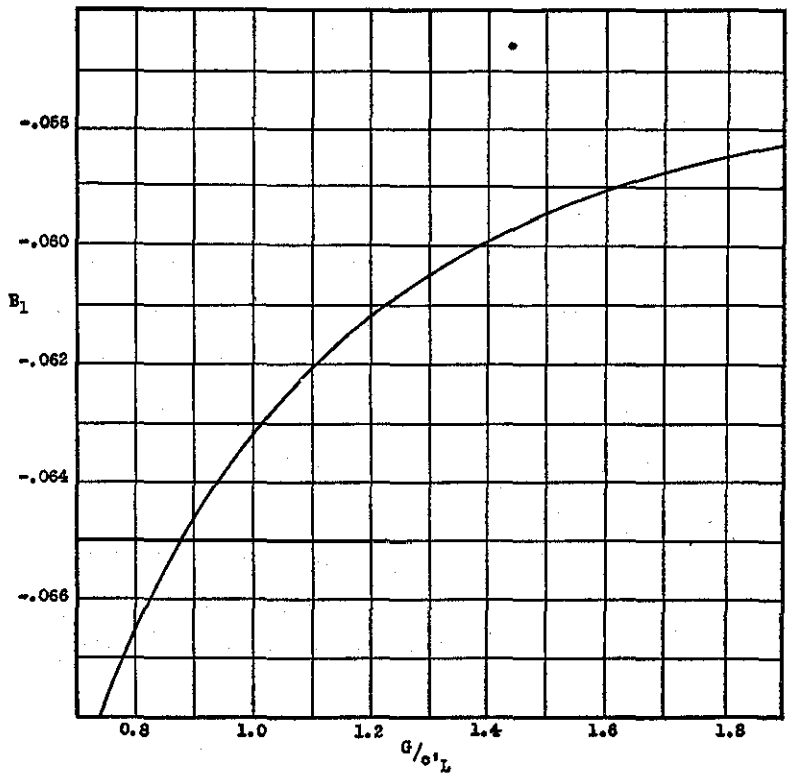

FIG. III-2

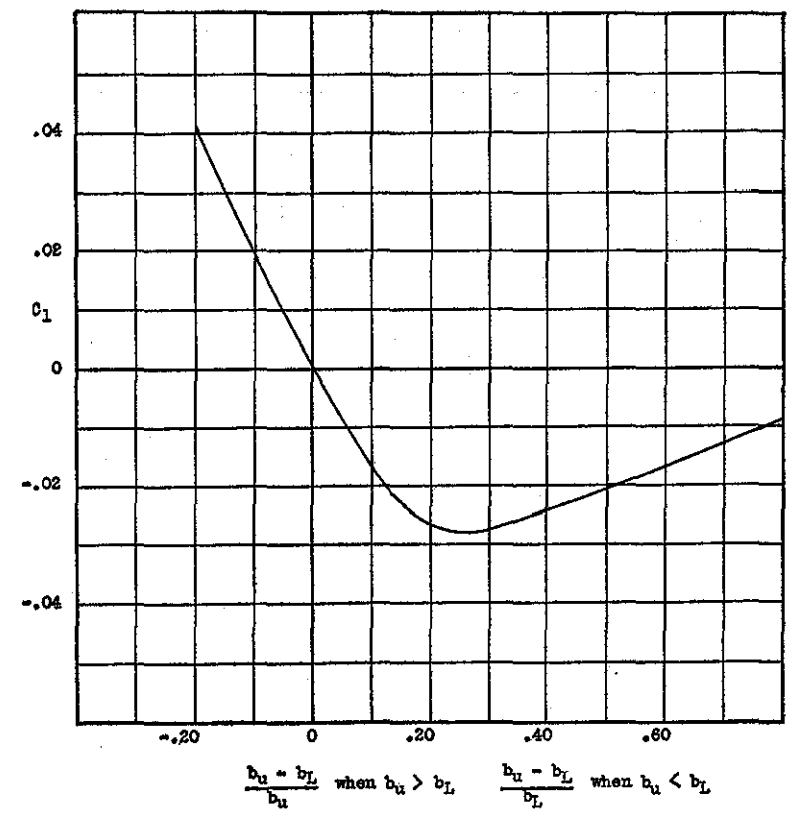

FIG. III-3

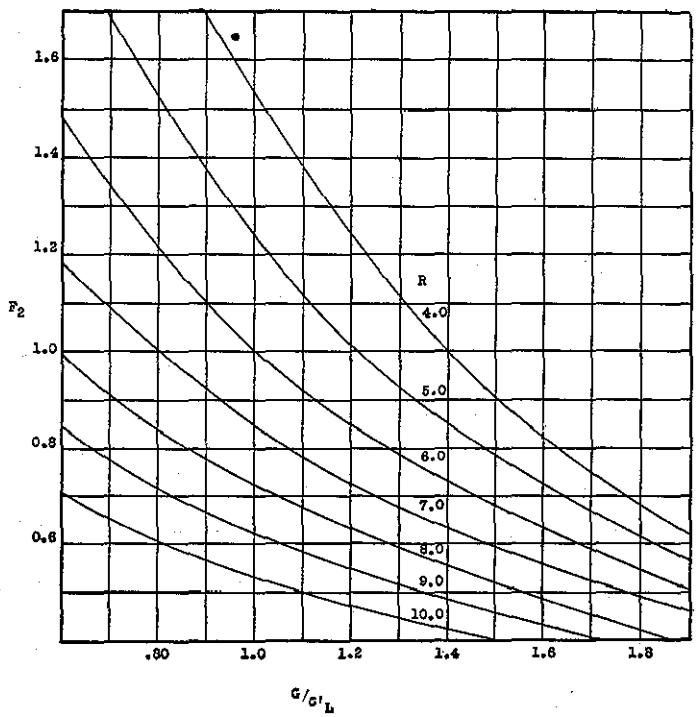

FIG III-4

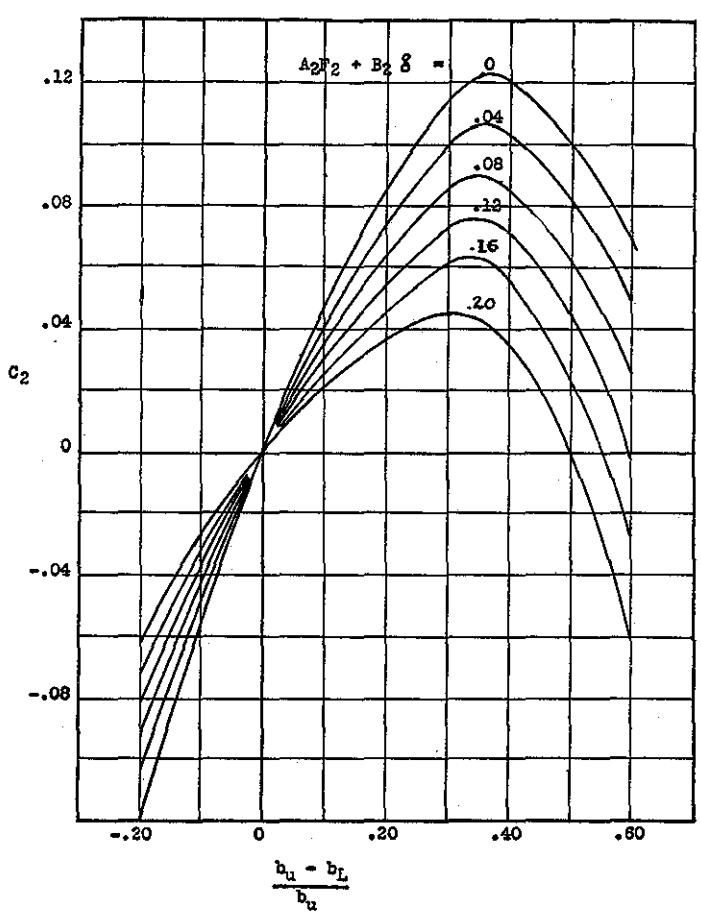

FIG III-5

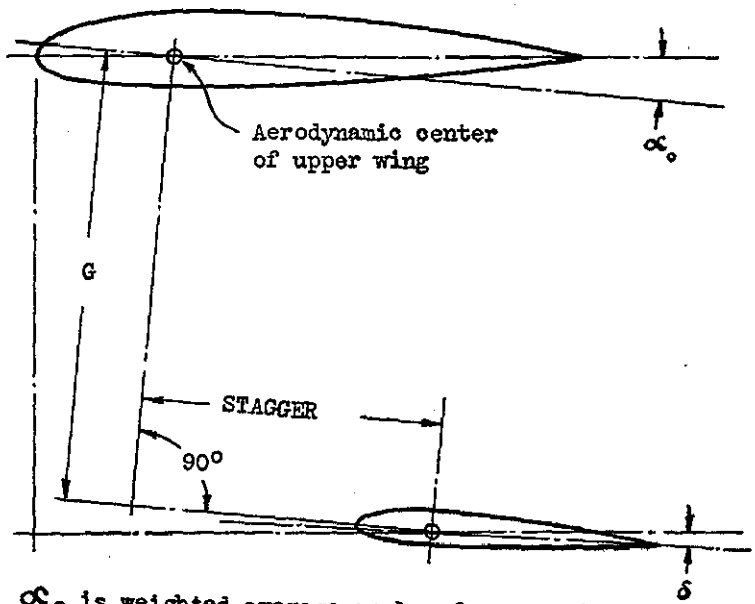

α_o is weighted average angle of zero lift

FIG. III-6

APPENDIX IV

(To be supplied)

PART 04.--AIRPLANE AIRWORTHINESS

The following amendment, together with Amendment Sheet No. 1, corrects Civil Air Regulations Part 04.--Airplane Airworthiness (as amended to April 1, 1941) to October 15, 1941.

****

AMENDMENT NO. 129: Revising the Qualifications for, and the Rules Governing the Operation of, Air Carriers (effective October 1, 1941).

1. Section 04.530 is amended to read as follows:

04.530 ACP LANDPLANES - VISUAL-CONTACT DAY FLYING. The same as specified in § 04.511 and, in addition, the following:

(a) An electrically heated pitot tube, or equivalent, for the airspeed indicator.

(b) One additional portable fire extinguisher of the type specified in §§ 04.510(j). (See § 04.5811 for installation requirements.)

(c) Fixed fire extinguishing apparatus of an approved type for each engine compartment.

(d) Type certificated radio equipment as specified in Part 40.

(e) A set of spare fuses. (See § 04.5822 for installation requirements.)

(f) A rate-of-climb indicator.

(g) A storage battery - same as § 04.513(f).

2. Section 04.5812 is amended to read as follows:

04.5812 SAFETY BELT SIGNAL. When a signal or sign is used to indicate to passengers the times when seat belts should be fastened, such signal or sign shall be located in a conspicuous place and so arranged that it can be operated from the seat of either pilot.
