FEDERAL AVIATION AGENCY
FLIGHT STANDARDS SERVICE
Washington 25, D. C.

November 30, 1962

REGULATIONS OF THE ADMINISTRATOR DRAFT RELEASE NO. 62-50

SUBJECT: Technical Standard Order C80 "Flexible Fuel and Oil Cell Material"

The Flight Standards Service of the Federal Aviation Agency has under consideration an amendment to Part 514 of the Regulations of the Administrator to add a new Technical Standard Order TSO-C80 "Flexible Fuel and Oil Cell Material". The reasons therefor are set forth in the explanatory statement of the attached proposal which is being published in the Federal Register as a notice of proposed rule making.

The Flight Standards Service desires that all persons who will be affected by the requirements of the proposal be fully informed as to its effect upon them and is therefore circulating copies in order to afford interested persons ample opportunity to submit comments as they may desire.

Because of the large number of comments which we anticipate receiving in response to this draft release, we will be unable to acknowledge receipt of each reply. However, you may be assured that all comment will be given careful consideration.

It should be noted that comments should be submitted, preferably in duplicate, to the Dockets Section of the Federal Aviation Agency, and in order to insure consideration must be received on or before January 23, 1963.

J. S. Moore

Director
Flight Standards Service

FEDERAL AVIATION AGENCY

FLIGHT STANDARDS SERVICE

(14 CFR 514)

/Regulatory Docket No. 1506; Draft Release No. 62-50/

TECHNICAL STANDARD ORDERS FOR AIRCRAFT MATERIALS, PARTS AND APPLIANCES

NOTICE OF PROPOSED RULE MAKING

Pursuant to the authority delegated to me by the Administrator (11.45 27 F. R. 9585) notice is hereby given that the Federal Aviation Agency had under consideration a proposal to amend Part 514 of the Regulations of the Administrator by adopting a new Technical Standard Order. This Technical Standard Order establishes minimum performance standards for flexible fuel and oil cell material for use in civil aircraft of the United States. The Civil Air Regulations, Parts 3, 4b, and 7, require that flexible fuel and oil tank liners be of an approved/or acceptable type. This standard establishes the criteria and minimum performance standards for material which is to be used for flexible fuel and oil tank liners.

Interested persons may participate in the making of the proposed rule by submitting such written data, views or arguments as they may desire. Communications should be submitted in duplicate to the Docket Section of the Federal Aviation Agency, Room A-103, 1711 New York Avenue, N. W., Washington 25, D. C. All communications received on or before January 23 , 1963 , will be considered by the Administrator before taking action on the proposed rule. The proposals contained in this notice may be changed in light of comments received. All comments submitted will be available in the Docket Section for examination by interested persons at any time.

This amendment is proposed under the authority of Sections 313(a) and 601 of the Federal Aviation Act of 1958 (72 Stat. 752, 775; 49 U.S.C. 1354(a), 1421).

In consideration of the foregoing it is proposed to amend Part 514 as follows:

By adding the following section 514.86:

§ 514.86 Flexible fuel and oil cell material - TSO-C80.

(a) Applicability. Minimum performance standards are hereby established for flexible fuel and oil cell material to be used in flexible fuel and oil tank liners of civil aircraft of the United States. New types of flexible fuel and oil cell material manufactured after the effective date of this section which are intended for use on civil aircraft of the United States shall meet the standards specified in Federal Aviation Agency Standard, "Flexible Fuel and Oil Cell Material", dated October 15, 1962.[1/]

(b) Marking. In lieu of the marking requirements of § 514.3(d), flexible fuel and oil cell material shall be legibly and permanently marked with the following information:

(1) Name and address of the manufacturer;

(2) Type of fluid for which approved, i.e. fuel, or MIL-L-6082 oil, or MIL-L-7808 oil;

(3) For oil cell material, the minimum and maximum temperature limit;

(4) For oil cell material, the oil-dilution suitability;

(5) Weight per square foot of cell material;

(6) Month and year manufactured; and

(7) Applicable Technical Standard Order (TSO) number.

(c) Data requirements. In accordance with the provisions of § 514.2 the manufacturer shall furnish to the Chief, Engineering and Manufacturing Branch, Flight Standards Division, Federal Aviation Agency, in the region in which the manufacturer is located, the following technical data:

[1/] Copies may be obtained upon request addressed to Publishing and Graphics Branch, Inquiry Section, MS-158, Federal Aviation Agency, Washington 25, D.C.

(1) Six copies of the manufacturer's end product typical assembly instructions and limitations;

(2) Six copies of the recommended installation procedures, limitations, restrictions, or other conditions pertinent to a satisfactory installation;

(3) Six copies of the instructions for the inspection, repair and storage of material and/or cells including age limits on material, i.e. shelf life and service time;

(4) Six copies of the material and construction data including the following;

(i) construction number and description (ply by ply) of the construction buildup complete with weight and gage of each ply,

(ii) support means (type of fastener and locations),

(iii) total weight per square foot of cell constructions, and

(iv) total thickness of cell construction; and

(5) One copy of the manufacturer's test report.

J. H. Moore

Acting Director
Flight Standards Service

Issued in Washington, D. C., on NOV 30 1962, 1962.

October 15, 1962

FEDERAL AVIATION AGENCY STANDARD

FOR

FLEXIBLE FUEL AND OIL CELL MATERIAL

1.0 Purpose: To specify minimum requirements for flexible fuel and oil cell material intended for use in fuel and oil tanks of aircraft.

2.0 Scope: This standard covers the requirements of fuel and oil cell material in which hydrostatic loads are resisted by the structure of the cavity or tank and not by the cell material itself.

3.0 General Requirements:

3.1 Materials: Samples of flexible fuel and oil cell materials and construction techniques shall be subjected to and satisfy the following tests:

4.0 Tests: The applicable tests for substantiating flexible fuel and oil cell material and construction techniques are indexed below in Table I.

TABLE I

Tests	Par. No.	Oil	Fuel
Leakage[1]	5.0	X	X
Aging	6.0	X	-
Slosh	7.0	X	X
Stand	8.0	X	X
Humidity	9.0	X	X
Fluid Resistance of Exterior Surfaces	10.0	X	X
Permeability	11.0	-	X
Fuel Contamination[2]	12.0	-	X
Oil Dilution Resistance	13.0	X	-
Inner Liner Strength	14.0	X	X
Seam Adhesion	15.0	X	X
Puncture Resistance	16.0	X	X
Low Temperature Leakage	17.0	X	X

1. Tests may be run in any order desired after completion of the leakage test.

2. Applies only to cells to be used on aircraft employing an oil dilution system.

4.1 Test Samples: Test samples shall consist of the following:

(a) Two cells with outside dimensions of 24 by 30 by 30 inches containing fittings representative of those used in tank construction for airframe installation. One cell to be used for stand test (Paragraph 8.0), the other for all other cell tests.

(b) Two 12 by 12 inch samples of composite cell construction. One for humidity test (Paragraph 9.0), the other for puncture test (Paragraph 16.0).

(c) One sample of inner layer ply, without barrier, approximately 900 square inches in area including seam for inner liner strength test (Paragraph 14.0) and seam adhesion test (Paragraph 15.1).

(d) One sample 6 by 6 inch inner layer ply, without barrier for all other inner layer tests.

(e) Two permeability samples as specified in Paragraph 11.0.

None of these samples shall be preplasticized with fluid prior to submission.

4.2 Test Fluids: Unless otherwise specified, the following test fluids shall be used in testing the different tanks:

(a) Fuel Tank: Test fluid conforming to MIL. Spec. MIL-S-3136,[1/] Type III.

(b) Oil Tank: Oil conforming to MIL. Spec. MIL-L-6082,[1/] Grade 1100.

(c) Oil Tank: Oil conforming to MIL. Spec. MIL-L-7808.[1/]

1/Copies may be obtained from the Commanding Officer, Naval Supply Depot, 5801 Tabor Avenue, Philadelphia 20, Pennsylvania, Code CDS.

5.0 Leakage: Each cell, with all openings sealed and with the minimum of external support necessary to maintain the cell shape, shall be subjected to an internal pressure of 2.0 p.s.i. The cell shall then be completely submerged in water or completely covered with soapy water. Leakage indicated by air bubbles in the water or soapy water solution shall be cause for rejection.

6.0 Aging:

6.1 Test Conditions: The maximum temperature capability of oil cell material shall be selected by the manufacturer. The selected temperature shall be stated as a limitation under (c) data requirements (2) the test fluid shall be maintained at a uniform temperature throughout the cell.

6.1.1 Test Duration: This test shall be conducted for a period of 200 hours.

6.1.2 Test Procedure: The cell shall be filled with 80 gallons of either test fluid 4.2(b) or (c) as applicable. At the end of the test period, the cell shall show no signs of deterioration or other unsatisfactory condition.

7.0 Slosh:

7.1 Test Conditions: The following test conditions shall prevail during slosh test.

7.1.1 Rocking Angle: The slosh rocking angle shall be 30 degrees total, approximately 15 degrees on either side of the horizontal position.

7.1.2 Mounting Axis: The cell shall be mounted in such a manner that the 24 inch dimension is vertical. This position shall be known as the horizontal position.

7.1.3 Fluid Temperatures: The temperature of the fluid during the slosh test shall be as shown in the table below:

Test Fluid Temperatures

Test Fluid	Temperatures
Fuel	$135^{o} \pm 10^{o}$ F.
Oil	Maximum temperature ($\pm 10^{o}$) selected by manufacturer and stated as a limitation

7.1.4 Test Pressure: The test cell shall be subjected to an internal/external pressure differential equivalent to the maximum operating pressure for which approval is desired.

7.1.5 Test Duration: This test shall be run as follows:

(a) Slosh for 25 hours at 16 to 20 cpm, or

(b) Slosh for 40 hours at 10 to 16 cpm.

7.1.6 Test Procedure: The test cell complete with filler cap, vents, and typical outlet fittings shall be installed in a suitable support jig and mounted on the rocker assembly. Sections of flexible hose shall be connected to the vent and outlet fittings.

The tank mounting structure is to be representative of an actual aircraft fuel cell compartment. Recommendations of the cell manufacturer for supporting or mounting the fuel cell in the aircraft fuel cell compartment are to be incorporated. The other end of each of these sections shall be rigidly attached to the support jig. The hoses shall be installed and supported in a manner representative of an actual installation in an aircraft. The interior of the support jig shall be completely lined with brown paper held in place by a suitable adhesive.

The test specimen shall be filled two-thirds full with the applicable test fluid containing a suitable dye. For fuel cells, one-half gallon of water shall also be added. For oil cells intended for use in aircraft using an oil dilution system, 30 percent by volume of fluid 4.2(a) shall be added to the test fluid. At the conclusion of this test, the test specimen shall be completely filled with the applicable test fluid and thoroughly inspected for leakage or other evidence of failure.

8.0 Stand Test: This test shall be conducted on the second test cell. The test cell, covered with brown paper, shall be supported as necessary considering the type of construction, and then filled with the appropriate test fluid containing a satisfactory staining agent. There should be no leakage or evidence of other failure at the end of 90 days under these conditions.

9.0 Humidity: A 12 in. by 12 in. sample of the composite cell construction shall be subjected for a total period of 15 days to the following 24-hour test cycle.

(a) 8 hours at 130° ± 3° F. and 100 percent relative humidity.

(b) 4 hours cooling to approximately 70° ± 3° F.

(c) 8 hours at 70° ± 3° F.and 100 percent relative humidity.

(d) 4 hours heating to 130° ± 3° F.

There shall be no corrosion, peeling, cracking, warping, blistering, delamination or discoloration of the cell after this period.

10.0 Fluid Resistance of Exterior Surfaces: The cell shall be placed in a container sufficiently large as to permit immersion to one-half the depth of the cell in the applicable test fluid. The cell shall be immersed for 24 hours at ambient temperature, after which it will be removed and examined. The exterior surface of the cell construction shall show no unsatisfactory swelling, separation, blistering, dissolution, or other deterioration.

11.0 Permeability:

11.1 Test Apparatus: The test apparatus shall consist of the following:

(a) Two permeability cups and rings constructed in accordance with Figure 1.

(b) A nylon solution shall be used for sealing the test disk to the permeability cup.

11.1.1 Preparation of Test Specimens: The uncured inner liner shall be applied to a 10 in. by 10 in. piece of corrugated fiberboard coated on one side with a suitable water soluble breakaway agent. The exposed surface of the inner liner shall be coated with prime cement and barrier resin (if required) in accordance with applicable manufacturing specifications. The assembly shall be wrapped with cellophane and covered with a suitable waterproof bag.

The assembly shall be vulcanized as in normal production. After vulcanizing, the waterproof bag and cellophane shall be removed and the inner liner shall be removed from the fiberboard using water as necessary. Free moisture shall be wiped from the assembly and it shall be conditioned 24 hours at a constant temperature of 77° ± 5° F. and a relative humidity of 40 ± 5 percent.

Two 2.5 in. diameter disks shall be cut from the vulcanized panel. One hundred ml. of test fluid specified in paragraph 4.2(a) shall be placed in each of the permeability cups. Nylon solution shall be applied to the face of the cup flanges covering the area inside the bolt circle. The nylon solution shall be allowed to come almost to dryness, then the test disks shall be applied to the cups with the barrier, if any, facing outward. The assemblies shall be completed by attaching the bolting rings and tightening the bolts in accordance with the following schedule:

Inner Liner Type	Bolt Torque
Gum stock	5 to 10 in.-lb.
Coated fabrics	15 to 20 in.-lb.
Unsupported plastic films	20 to 25 in.-lb.

11.1.2 Test Procedure: Permeability cups prepared as specified above shall be placed in a suitable rack in a constant temperature of 77° ± 5° F. and a relative humidity of 40 ± 5° percent.

After allowing 1 hour for equilibrium, the cups shall be weighed to the nearest .005 gram and placed in the rack with the faces of the cups facing upward (test disks up). The cups shall be kept at the above constant temperature for 24 hours, then weighed to check for seal integrity. The bolts shall be retorqued if necessary. The cups shall then be inverted (test disks down) in a rack that permits free access of air to the test disks.

Cups shall be weighed at the end of the third, fifth and eighth day after inverting. Defective films or leaks caused by faulty assembly will usually be found when making the weighing on the third day. The diffusion rate calculation shall be made on the fifth day to eighth day period and expressed as fluid ounces per square foot per 24 hours. The permeability shall be less than .025 fluid ounces per square foot per 24 hours for each sample tested.

Note: Diffusion expressed in fluid ounces per square foot per 24 hours equals the gram loss of the test specimen per 24 hours multiplied by a factor K which is defined as follows:

$$K = \frac{144}{(\text{Sp.gr.})(29.573)(3.142)R^2}$$

Where sp. gr = Specific gravity of test fluid at 77°F.

R = Inside radius of test cup expressed in inches.

12.0 Fuel Contamination:

12.1 Nonvolatile Gum Residue: A five gram sample of the inner layers up to the barrier, shall be diced up into approximately .062 inch squares and placed in a flask containing 250 ml. of test fluid as specified by Paragraph 4.2(a) and allowed to stand for 48 hours at 77° ± 5° F.

The contaminated test fluid shall be decanted off, and the nonvolatile gum residue determined by Method 3302 of Federal Test Method Standard No. 791,[2/] ASTM D381-54T, except that the total evaporation time shall be 45 minutes. The nonvolatile material shall not exceed 60 milligrams per 100 ml. of the contaminated fluid.

12.1.1 Stoved Gum Residue: The beakers containing the nonvolatile material shall be placed in an appropriate bath maintained constantly at a temperature of 572° ± 9° F. for 30 minutes. After cooling in a closed container, the beakers shall be weighed. The stoved gum residue shall not exceed 20 milligrams per 100 ml. of the contaminated fluid, after necessary corrections have been made for preformed gums originally present in the test fluid.

13.0 Oil Dilution Resistance: Tensile and elongation tests, before and after immersion in the appropriate oil diluted 30 percent by volume with test fluid specified by Paragraph 4.2(a), shall be made on the inner layer ply according to the methods described in Federal Test Method Standard No. 601,[2/] Methods 4111 and 4121, respectively. The test specimens shall be immersed for 48 hours at room temperature. The tensile properties shall not be reduced more than 40 percent from the original values, and the Shore A durometer hardness shall not vary more than 15 points from the original value.

14.0 Inner-liner Strength:

14.1 Gum Inner-Liner Strength: The strength of the gum inner-layer ply, without barrier, shall be determined in accordance with Federal Test Method Standard No. 601,[2/] Method 4111 before and after immersion in the test fluid specified in Paragraph 4.2(a) for 72 hours at a temperature of 135° ± 3° F. The tensile strength shall also be determined before and after immersion in water for 72 hours at a temperature of 135° ± 3° F. The tensile strength shall not be reduced more than 50 percent for fuel immersion and 20 percent for water immersion calculated on the basis of the original cross-sectional area.

2/Copies may be obtained from the Business Service Center, General Services Administration, Region 3, Seventh and D Streets, S. W., Washington 25, D. C. Federal Test Method Standard No. 601, $2.00 per copy and Federal Test Method Standard No. 791, and Specification CCC-T-191, $1.75 each per copy. Make checks payable to General Services Administration.

14.2 Fabric Inner-Liner Strength: The tensile strength of the fabric inner layer ply, without barrier, shall be determined in accordance with Specification CCC-T-191[2/], Method 5100 before and after immersion in test fluid specified in Paragraph 4.2(a) for 72 hours at a temperature of 135° ± 3° F. The tensile strength shall also be determined before and after immersion in water for 72 hours at a temperature of 135° ± 3° F. The tensile strength shall not be reduced more than 20 percent for fuel immersion and 50 percent for water immersion calculated on the basis of the original cross-sectional area.

15.0 Seam Adhesion: The seam adhesion of the inner-layer ply to itself before and after immersion in the test fluid specified in Paragraph 4.2(a) for 72 hours at a temperature of 135° ± 3° F. shall be tested within 4 hours along the length of the seam by the strip back method using a jaw separation rate of 2 inches per minute in accordance with Federal Test Method Standard No. 601[2/] Method 8011. Where the adhesion of the seam is less than the strength of the material, the adhesion shall be a minimum of 6 pounds per inch.

15.1 Seam Adhesion (Alternate Procedure): As an alternate procedure to the above, the seam adhesions of the inner-layer ply to itself may be tested by cutting a strip of inner-layer material one inch wide having a seam made in the same manner as is used in the tanks submitted under Paragraph 4.1(a). This seam shall be perpendicular to and midway in the length of the strip. When a tensile load has been applied of sufficient magnitude to break the strip, there shall be no failure of the seam.

16.0 Puncture Resistance: A cell wall shall be fastened in a specimen holder in accordance with Figure 2. A piercing instrument with its end conforming to Figure 2 shall be forced against the cell wall at approximately the center of the area enclosed by the specimen holder. The force required to puncture the cell shall not be less than 15 pounds.

17.0 Low Temperature Leakage: The cell supporting structure cavity shall be lined with brown paper and the cell installed in the structure. The cell shall be completely filled with the appropriate test fluid containing a staining agent and allowed to stand for seven days at 135° ± 10° F. The cell shall then be emptied and subjected to an air dry out at 155° ± 5° F. for seven days. The cell shall then be completely refilled with the appropriate test fluid containing a staining agent, cooled to -65° ± 5° F. and allowed to stand at this temperature a minimum of three days. The test fluid in contact with the

cell inner liner shall have reached -65° F. prior to the start of the three-day period. The cell shall be instrumented by placing thermocouples against the inside surface of the cell liner, one within six inches of the top surface on one side panel and the other within six inches of the bottom surface on the opposite side panel. At the end of the three-day period, the cell shall be brought back to room temperature, drained and examined internally and externally for fluid leakage or other evidence of failure. Any indication of failure shall be cause for rejection.

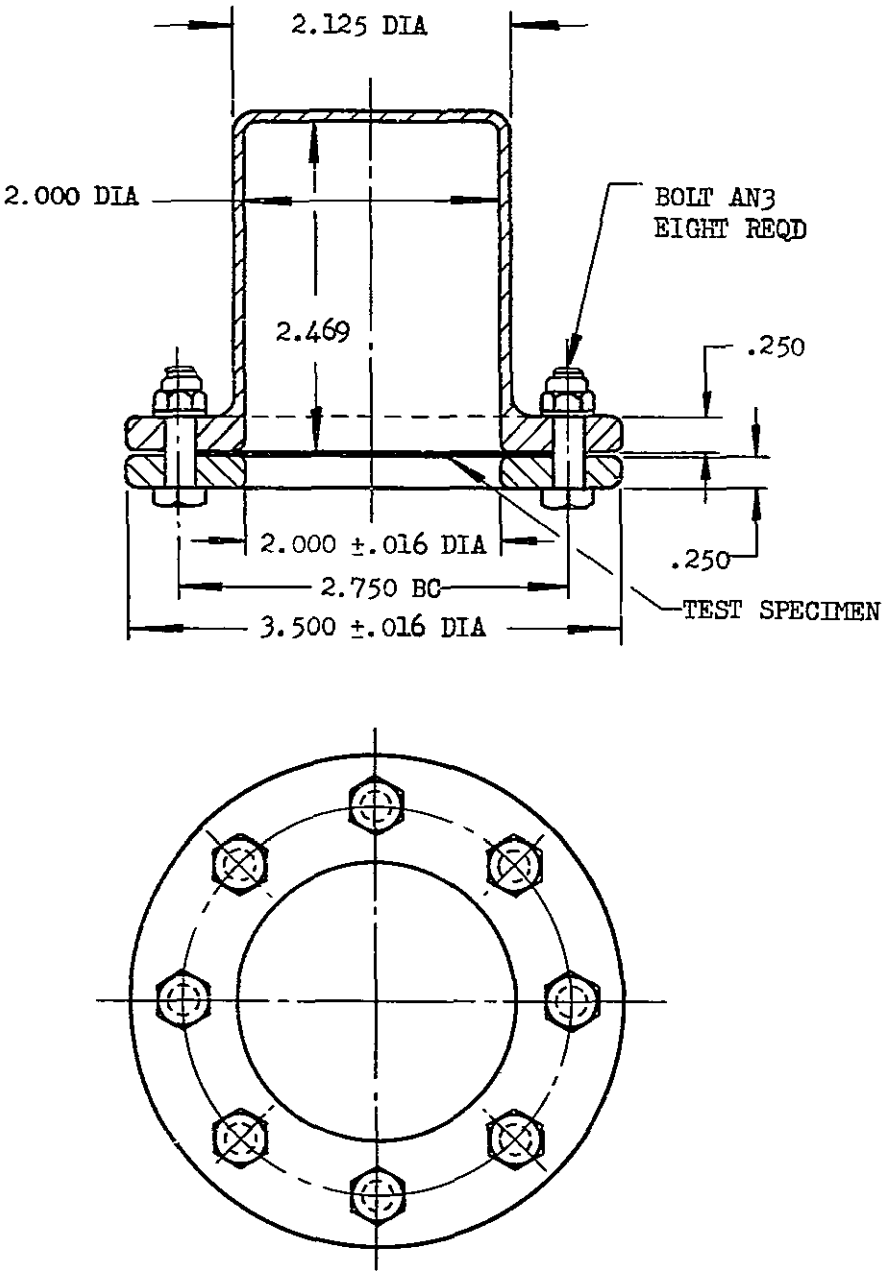

DIMENSIONS IN INCHES

FIGURE 1. Permeability cup assembly

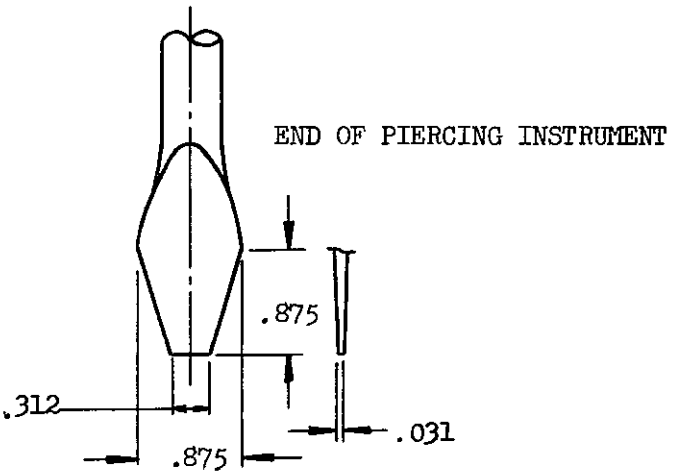

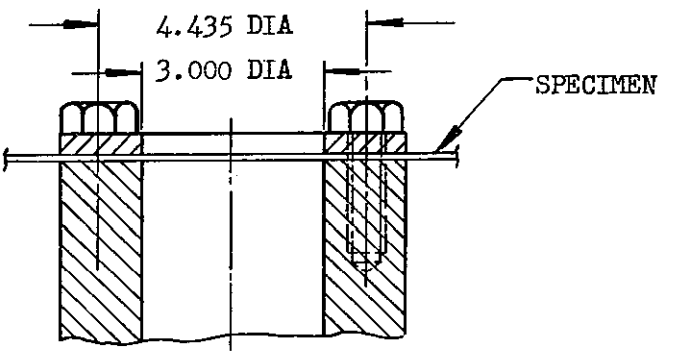

SPECIMEN HOLDER

DIMENSIONS IN INCHES

FIGURE 2. Piercing instrument and specimen holder