EMIGH

52–11–1 Emigh Applies to All Trojan A–2 Model Aircraft.

Compliance required by August 1, 1952.

As the result of a reported failure of the welded joint in the elevator control tube socket, the following, or equivalent, should be accoomplished, to preclude the possibility of recurrence of this type failure:

(*a*) Install a ¼-inch AN steel bolt through the elevator control tube socket as shown in Figure 1 and secure with an elastic stop nut. Two installations will be necessary, one on the pilot's side and one on the passenger's.

(*b*) Due to the limited amount of clearance, it is recommended that the bolts be installed in the direction and location as shown. Ascertain that adequate clearance is provided when the control stick is operated throughout its full range.

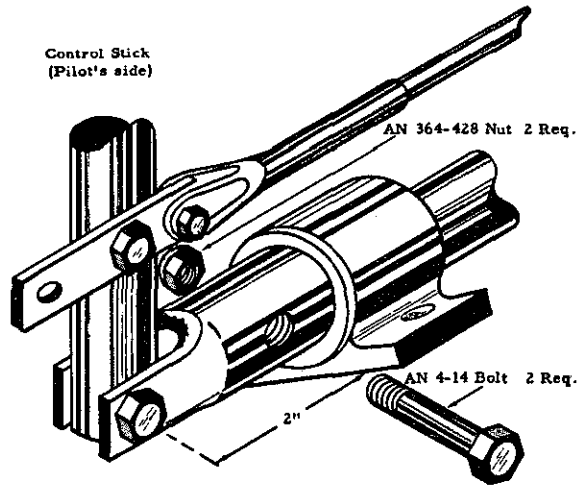

FIGURE 1

ENGINEERING AND RESEARCH CORP.

(*See Air Products*)