CALLAIR

46-36-1 *See* Continental Engines.

47-40-2 *See* Continental Engines.

60-7-3 CallAir Amdt. 119 Part 507 Federal Register March 25, 1960. Applies to All CallAir Models A-4, A-4 Modified, A-5 Up To and Including Serial Number 292 and A-6 Aircraft Serial Numbers 202, 244, 248, 252, 262, 264, 268, 269, 270 and 271.

Compliance required not later than May 15, 1960, and at each 50 hours' time in service thereafter.

Due to reports of cracks and separation of the lower diagonal brace member on the engine mount the following inspection shall be conducted.

Visually inspect the lower diagonal brace member of the engine mount especially in the area of the gusset plates at the ends of the members. If cracks are found, replace with CallAir redesigned mount, P/N 6-11-4A, or repair in accordance with the method outlined in CallAir Service Bulletin No. 7, or equivalent. After replacement with P/N 6-11-4A or repair, this special inspection may be discontinued. (CallAir Service Bulletin No. 7 covers this same subject.)

CANADAIR

61–21–1 Canadair Amdt. 348 Part 507 Federal Register October 17, 1961. Applies to Model CL–44D4 Aircraft, Serial Numbers 14, 16, 19 Through 23, 25 and 26.

Compliance required within the next 25 hours' time in service unless already accomplished within the last 10 hours' time in service and at intervals not to exceed 35 hours' time in service.

To preclude failure of the tail pipe door structure, the following must be accomplished:

(a) Inspect the following tail pipe compartment access panels for fatigue cracking using dye penetrant or equivalent in the area of the attachment holes. Part Numbers to be inspected are 44–10721, 44–10721–1, 44–10722, 44–10722–1, 44–10726, 44–10721–990, 44–10721–991, 44–10722–990, 44–10722–991, 44–10726–990, 44–10751, 44–10751–1, 44–10752, 44–10752–1, and 44–10753.

(b) If cracks are found, panels must be replaced, repaired or reinforced in accordance with Canadair Service Bulletin No. CL–44D4–138 or equivalent, or modified in accordance with a Department of Transport and FAA approved modification prior to further flight except ferry flight in accordance with the provisions of CAR 1.76. Following the incorporation of the interim repair or reinforcement covered in Service Bulletin No. CL–44D4–138, or replacement, the inspections specified in (a) must be continued at intervals not exceeding 35 hours' time in service. If further cracks are found after repair or reinforcement per Canadair Service Bulletin CL–44D4–138, the parts shall be replaced or modified in accordance with Canadian Department of Transport and FAA approved modification.

(c) The special inspections required by this airworthiness directive may be discontinued after incorporation of the Canadian Department of Transport and FAA approved modification of the affected parts.

(d) Upon request of the operator, an FAA maintenance inspector, subject to approval of the Chief, Engineering and Manufacturing Branch, FAA Eastern Region, may adjust the repetitive inspection intervals specified in this AD to permit compliance at an established inspection period of the operator if the request contains substantiating data to justify the increase for such operator.

This directive effective October 17, 1961.

61–22–2 Canadair Amdt. 355 Part 507 Federal Register November 1, 1961. Applies to All CL–44D4 Aircraft.

Compliance required as indicated.

Failures have occurred on the main landing gear rotation lever P/N 4487528 on Model CL–44D4 aircraft. Failure of the lever can cause the landing gear to remain in "up" position when the lever is operated to lower the gear.

The following must be accomplished pending the development and installation of a Canadian Department of Transport and FAA approved modification of the affected parts after which no further inspection will be required:

(a) Within the next 45 hours' time in service unless already accomplished within the past 180 hours' time in service and at intervals not exceeding 225 hours' time in service thereafter conduct the dye penetrant inspection specified in Canadair Service Information Circular No. 27–CL–44D4 or FAA approved equivalent. Cracked levers must be replaced prior to further flight except for a ferry flight in accordance with the provisions of CAR 1.76.

(b) Subsequent to the effective date of this AD, at intermediate intervals between dye penetrant inspections not exceeding each 45 hours' time in service, conduct a visual inspection of the affected part. Cracked levers must be replaced prior to further flight except for a ferry flight in accordance with the provisions of CAR 1.76.

(c) Upon request of the operator an FAA maintenance inspector subject to prior approval of the Chief, Engineering and Manufacturing Branch, FAA Eastern Region, may adjust the repetitive inspection intervals specified in this AD to permit compliance at an established inspection period of the operator if

the request contains substantiating data to justify the increase for such operator.

This directive effective November 1, 1961.

61-22-3 Canadair Amdt. 356 Part 507 Federal Register November 1, 1961. Applies to All CL-44D4 Aircraft.

Compliance required as indicated.

The following measures are required pending the development and installation of Canadian Department of Transport and FAA approved modification to the outer elevator hinge fittings to prevent elevator flutter during flight.

Within the next 25 hours' time in service after the effective date of this AD, and every 25 hours' time in service thereafter, apply an upload of approximately 110 lbs. on elevator spar at Station 299 and check for fore and aft movement at upper and lower hinge bracket attachments.

(a) If movement exceeds .010 inches at the upper and lower hinge bracket attachment points, the fittings, P/N 28-A24498 A and B and P/N 28-A24670 must be reworked as stated in (1) or (2):

(1) Open up the .375-inch diameter holes to .4375±.0005-inch diameter. Replace existing bolt, P/N 28-A24367 with an NAS 464-7-22 bolt or equivalent; AN 320-7 nut or equivalent; (use washers under nut to line up cotter pin hole), and cotter pin.

(2) Open up the .375-inch diameter holes to .4750±.0005-inch diameter. Install bushing and reinstall the original bolt, P/N 28-A24367, if within tolerances (i.e., .3745+.0000 --.0003-inch diameter), or replace with new bolt, P/N 28-A24367. Use existing nut and washer, install new cotter pin. Remove all sharp edges. The bushings shall meet the following requirements:

Material:	SAE 4130, MIL-S6758 condition "N." Cadmium plated.
Outside diameter:	Before plating .4770+.0005−.0000-inch diameter. After plating .4780+.0005−.0000-inch diameter.
Length:	.748+.002−.000-inch for bushings in P/N 28-A24498 A and B. .298+.002−.000-inch for bushings in P/N 28-A24670.

After installation, the bushings must be line reamed to their inside diameter of .3750±.0005-inch. Chamfer inside of bushing .03-inch x 45°, under head of bolt.

(b) Prior to installing bolts, shim the gap between the attachment lugs, P/N 28-A24498 A and B and the hingle brackets, P/N 28-A24670 to eliminate any movement. The torque value for either of the replacement bolts, P/N 28-A24367 or NAS 464-7-20 or equivalent, is 10 inch-pounds.

(c) After rework, holes must be line reamed to positively insure alinement. When the line reaming is done from outside and from underside of stabilizer, a 0.5-inch diameter hole is required in the horizontal stabilizer outer skin. If reamed from top, the spar cap may be removed locally to clear reamer. Rework of the skin shall be in accordance with Canadair Drawing 28-22135.

(d) Fittings, P/N 28-A24498 A and B, and P/N 28-A24670 whose .375-inch diameter (original) holes are elongated beyond .4750-inch± .0005-inch must be replaced.

(e) Upon request of the operator, an FAA maintenance inspector, subject to prior approval of the Chief, Engineering and Manufacturing Branch, FAA Eastern Region, may adjust the repetitive inspection intervals specified in this AD to permit compliance at an established inspection period of the operator if the request contains substantiating data to justify the increase for such operator.

This directive effective November 1, 1961.

61-23-2 Canadair Amdt. 362 Part 507 Federal Register November 3, 1961. Applies to All CL-44D4 Aircraft.

Compliance required as indicated.

To preclude failure of the elevator tab tension rods, P/N 28-90031, the life of each rod is limited to 450 hours' time in service. Every 450 hours' time in service, all eight tension rods of the elevator tab system must be replaced with similar parts supplied by Canadair or FAA approved equivalent. For those aircraft with more than 450 hours' time in service on the effective date of this AD, rods must be replaced within the next 25 hours' time in service.

When the rods are replaced and detuned in accordance with the procedures in Canadair Service Bulletin No. CL44D4-201 Issue 2, the

replacement time is increased to 10,000 hours' time in service.

(Canadair Service Bulletins Nos. CL44D4–190, and CL44D4–201 Issue 2 apply to this subject.)

This directive effective November 3, 1961. Revised June 23, 1962.

61–26–2 Canadair Amdt. 379 Part 507 Federal Register December 21, 1961. Applies to All CL–44D4 Aircraft.

Compliance required as indicated.

As a result of a fuel leak found in the line to the upper heater, the following inspection must be accomplished within the next 25 hours' time in service after the effective date of this AD unless already accomplished within the last 40 hours' time in service and at intervals of 65 hours' time in service thereafter.

With full fuel pressure in the tail heater fuel lines, inspect all fuel lines and fittings in the tail heater compartment for leaks and security of attachment. Loose lines shall be properly secured, and defective lines and fittings replaced prior to further flight.

The special inspections required by this airworthiness directive may be discontinued after incorporation of the Canadian Department of Transport and FAA approved modification.

Upon request of the operator an FAA maintenance inspector subject to prior approval of the Chief, Engineering and Manufacturing Branch, International Division, Washington 25, D.C., may adjust the repetitive inspection intervals specified in this AD to permit compliance at an established inspection period of the operator if the request contains substantiating data to justify the increase for such operator.

This directive effective December 21, 1961.

62–8–6 Canadair Amdt. 419 Part 507 Federal Register April 11, 1962. Applies to All Model CL–44D4 Aircraft.

Compliance required within next 50 hours' time in service after the effective date of this AD.

As an interim measure, pending development of corrective engine modifications, either replace the engine breather duct overheat detectors, with new detectors P/N 28–50603–8 set to 165° C. ± 15° C. or recalibrate the detectors per Canadair or Fenwal instructions, to operate at 165° C. ± 15° C. Reidentify the recalibrated detectors as P/N 28–50603–8.

(Canadair Service Information Circular 165, Amendment A, dated March 16, 1962, covers this subject.)

This directive effective April 11, 1962.

62–9–2 Canadair Amdt. 430 Part 507 Federal Register April 25, 1962. Applies to All Model CL–44D4 Aircraft Equipped With Rolls Royce Tyne Engines.

Compliance required within next 15 hours' time in service and at each 15 hours' time in service thereafter.

To preclude further cases of bearing failure inspect the magnetic plug and the filter in the scavenge oil line from the high pressure turbine bearing for deposits of hard carbon as specified in the note under paragraph 2B of Rolls Royce Tyne Alert Service Bulletin No. A.Ty. 79–12. (Effective May 2, 1962.) The engine is to be removed from service and repaired in accordance with approved maintenance procedures if such deposits are present.

Upon request of the operator, an FAA maintenance inspector subject to prior approval of the Chief, Engineering and Manufacturing Branch, International Division, may adjust the repetitive inspection intervals specified in this AD to permit compliance at an established inspection period of the operator if the request contains substantiating data to justify the increase for such operator.

(Rolls Royce Tyne Alert Service Bulletin No. A.Ty. 79–12 dated March 30, 1962, covers this same subject.) (Effective May 2, 1962.)

This directive effective upon publication in the Federal Register for all persons except those to whom it was made effective immediately by telegram dated April 6, 1962.

62–21–1 Canadair Amdt. 488 Part 507 Federal Register September 27, 1962. Applies to All Model CL–44D4 Aircraft Equipped With Rolls Royce Tyne Engines.

Compliance required within the next 350 hours' time in service after the effective date of this AD.

To preclude bearing failure resulting from sludge deposited in oil ways which feed the high pressure turbine bearing, accomplish the following:

(a) Install high pressure turbine bearing scavenge oil temperature indicating system in accordance with Rolls Royce Modification 959 (Service Bulletin Ty72–384) and Canadair Service Information Circular No. 216–CL44D4.

(b) If the oil flow through the scavenge line has not been checked within 100 hours prior to the installation of the temperature indicating system specified in (a), check the oil flow in accordance with the procedures outlined in Sections 2A and 2B of Rolls Royce Alert Service Bulletin No. A–Ty79–15 at the time the temperature indicating system is installed.

(c) Appropriate changes to the airplane flight manual shall be made covering the applicable provisions of Section 2D of Service Bulletin A–Ty79–15 regarding feathering of an engine if the turbine bearing scavenge oil corrected temperature exceeds 180° C. during cruise.

(d) When the oil temperature indicating system is installed per paragraph (a) the inspections required in AD 62–9–2 as amended, may be discontinued.

This directive effective October 29, 1962.

CESSNA

46-1-1 Cessna (Was Service Note 1 of AD-722-5.) Applies to All T-50 Aircraft.

Improper flap chain operation, characterized by jumpy chain action, may lead to the chain jumping the idler and jamming. Improper operation is probably due to incorrect chain tension or excessively worn sprockets or both. The chain tension can be checked at the flap screw inspection opening by pressing the chains together at a point approximately 4 inches inboard of the flap screw sprocket. The distance between the chains should not be less than 1/4 nor more than 3/4 inch. The chain tension may be adjusted by means of the adjustable arm or the idler. The sprockets are considered excessively worn and should be replaced when the teeth are 1/2 the thickness of the sprocket web. In addition, the chain guard on the idler should be checked to make certain that it has not been bent or worn through. Inspect all chain links for cracks and replace any links that are found cracked. It is recommended that the chain be replaced every 1,000 hours.

(Cessna Service Bulletin No. 100 dated July 13, 1945, covers this same subject.)

46-1-2 Cessna (Was Service Note 2 of AD-722-5.) Applies to All T-50 Aircraft.

When airplane has been subjected to a hailstorm, a careful inspection should be made for damage to plywood reinforcements under fabric covering, even when hail has not caused apparent damage.

(Cessna Service Bulletin No. 101 dated July 19, 1945, also covers this subject.)

46-12-1 Cessna (Was Mandatory Note 8 of AD-722-5.) Applies Only to AT-17 and UC-78 Series Airplanes.

Inspection required immediately.

On all AT-17 or UC-78 Series airplanes that have not been re-covered with grade A fabric at time of (or subsequent to) the original civil certification, inspect the fabric on wings and control surfaces to determine that the fabric complies with grade A fabric standards and has a sample breaking strength of at least 56 pounds. The lacing cord should also be checked and should have a breaking strength of at least 56 pounds when tested double. This inspection will require the testing of one or more samples of fabric and cord, the location from which the samples are to be taken and the number necessary will be determined by the CAA representative.

46-44-1 Cessna (Was Mandatory Note 1 of AD-768-4.) Applies Only to 120 and 140 Aircraft Serial Numbers 8001 to 9619, Inclusive.

Compliance required prior to January 1, 1947.

Remove the auxiliary rudder stops (two bolts) to eliminate the possibility of the flange of the bellcrank on the rudder bars catching on the bolt heads and locking the system. These bolts are at the center of the cockpit just forward of the rudder pedals. Removal of the fairing which forms a tunnel along the floor from the seat to the pedals is necessary for access to the bolts.

(Cessna Service Letter No. 2-140 covers this.)

46-44-2 Cessna (Was Mandatory Note 2 of AD-768-4.) Applies Only to 120 and 140 Aircraft Serial Numbers 8001 to 9619, Inclusive.

Compliance required prior to January 1, 1947.

Reinforce attachment of the safety belt brackets to the skin of the fuselage by the addition of three AN 456AD5 rivets at the safety belt end of each bracket. Make certain that the rivets pass through both bracket and fuselage skin to insure a good connection.

(Cessna Service Letter No. 10-120 and 140 covers this same subject.)

46-44-3 Cessna (Was Mandatory Note 3 of AD-768-4.) Applies Only to 120 and 140 Aircraft Serial Numbers 8001 to 9619, Inclusive.

Compliance required prior to January 1, 1947.

Rework attachment of windshield upper edge by the installation of a retaining channel deeper than the original and extending the entire width of the fuselage. The channel consists of two pieces; one an 0.040-inch 24ST alclad strip, 1⅞ inches x 42 inches, outside of the windshield and with the rear edge inserted between the fuselage top skin and the front flange of the spar "U" channel; the other an 0.032-inch 24ST alclad strip, 1 13/16 inches x 44 inches, inside of the windshield and overlapping the above-mentioned spar flange. These strips are secured to the top skin and spar flange by a single row of 44 AN 456AD4 rivets. A piece of felt, 2¾ inches x 44 inches x 1/16-inch thick, SAE F-55 or equivalent, should be folded over the edge of the windshield and cemented thereto to provide a seal and a tight fit in the channel. This modification is necessary to insure that the windshield will not pull out at the top and alter the airflow, thereby seriously affecting the operational characteristics of the airplane.

(Cessna Service Letter No. 14-120 and 140 covers this same subject.)

46-44-4 Cessna (Was Mandatory Note 4 of AD-768-4.) Applies to 120 and 140 Aircraft Serial Numbers Up to and Including 9721.

Replacement required prior to December 1, 1946.

All U. S. Rubber Co. P-212 and P-212L Series flexible ducts installed in the carburetor hot air system should be replaced by U. S. Rubber Co. P-208-S duct or P-208 duct coated with neoprene by Cessna or its distributors.

(Cessna Service Letter No. 16-120 and 140 covers this same subject.)

46-44-5 Cessna (Was Mandatory Note 5 of AD-768-4.) Applies Only to 120 and 140 Aircraft Serial Numbers 8001 to 8517, Inclusive.

Compliance required prior to January 1, 1947.

Replace each of the four internal wrenching bolts which attach the engine to the engine mount with an AN 6 bolt and a special offset washer. AN 6-47 bolts should be used at the upper fittings and AN 6-35 bolts at the lower fittings. The special washer is made of 4130 steel ⅞ inch in diameter and ¼ inch in thickness with a through hole 0.377 inch in diameter and the O.D. machined to a 0.600-inch diameter a depth of ⅛ inch. The 0.600 inch-diameter offset fits into the aft end of the attachment fitting and the head of the replacement bolt bears directly on the special washer. Also, an AN 960-616 washer should be added between the nut and the AN 970-6 washer at the front face of the rubber bushing. This change is made to prevent the bolts from pulling through the 1½-inch diameter x 0.049-inch plate welded to the front of each fitting.

(Cessna Service Letter No. 18 covers this same subject.)

46-46-3 Cessna (Was Mandatory Note 10 of AD-722-5.) Applies to T-50 Aircraft.

Inspection required not later than January 1, 1947.

Inspect the aileron and flap hinge brackets for evidence of cracking where the bearing is staked into the hinge bracket. If cracks are found, the hinge bracket should be replaced.

47-5-1 Cessna (Was Mandatory Note 11 of AD-722-5.) Applies Only to Model T-50 Airplanes Having a Fuel Shutoff Valve Located in Each Engine Nacelle. These Valves are Controlled by "T" Shaped Handles Located Below the Pilot and Copilot Seats.

Compliance required prior to original certification or, if previously certificated, not later than March 1, 1947.

To prevent the pilot or copilot from inadvertently operating the fuel shutoff valves by striking the "T" shaped fuel shutoff valve handles with their feet, the "T" shaped handles are to be changed to circular shaped handles. To accomplish this a ring having an inside diameter of 3½ inches is to be formed of ¼-inch x 0.035 steel tubing and slid over each "T" shaped handle and welded in place. This will result in a handle of this appearance:



FIGURE 1

47-6-10 Cessna (Was Mandatory Note 6 of AD-768-4.) Applies to 120 and 140 Aircraft Serial Numbers Up to and Including 9669.

Compliance required prior to April 1, 1947.

Install carry-through bar between the ends of the aileron control chain that is installed at the top of the control "T" to make a continuous loop at this chain installation so that both control wheels operate positively in the same direction. This is necessary to prevent possible locking of aileron system at full throw.

(Cessna Service Letter No. 17 dated September 19, 1946, covers this same subject.)

47-6-11 Cessna (Was Service Note 1 of AD-768-4.) Applies Only to 120 and 140 Aircraft Serial Numbers 8001 to 8799, Inclusive.

Compliance required at next periodic inspection and upon each 100 hours of operation thereafter until revised door posts are installed.

Inspect the forward doorposts for cracks, particularly the flange section leading from the post to the instrument panel at the base of the windshield and the post itself below the rivet cluster at the top. All inside fairing attached to the post between the top and the floor should be removed to permit a thorough inspection. Cracks in the above-mentioned flange not over ¾ inch in length may be repaired by stop-drilling. If there are longer cracks in the flange or any cracks in the doorpost structure itself, the doorpost should be replaced with the later type post, Cessna P/N 0411867-2 and 0411867-3, in accordance with installation instructions supplied by Cessna.

(Cessna Service Letter No. 20 dated October 8, 1946, covers this same subject.)

47-26-2 Cessna (Was Mandatory Note 10 of AD-768-4.) Applies to 120 and 140 Aircraft Serial Numbers 8000 to 13777, Inclusive.

Pending compliance with this note the following placard shall be installed immediately on the instrument panel: "ALL ACROBATICS PROHIBITED. REDUCE CRUISING AIRSPEED IN ROUGH AIR."

Compliance with modifications listed below required prior to August 1, 1947. After August 1, placard is not valid, and airplanes are not to be flown until modifications are accomplished.

Inspect the wing leading edge for indications of buckling in the skin which may result from failure of the spot welds attaching the skin to the nose ribs. If there is any buckling of the skin at the ribs, other than at the extreme nose radius, the fabric should be cut open on the bottom surface just forward of the front spar for thorough inspection of the affected nose ribs. Any buckled nose ribs should be repaired or replaced. Upon completion of the above the following reinforcements should be accomplished:

1. Leading Edge—

(*a*) On covered wings install four Cherry CR 163-4-4 rivets in the upper surface leading edge at each nose rib from No. 2 to No. 10 inclusive. No. 30 holes should be drilled through the fabric skin and rib flange at chordwise locations determined by use of a template supplied by Cessna. (If template is not available holes can be located by finding 3/32-inch jig hole (or flush rivet in early airplanes) in leading edge skin at tip of each nose rib and drilling holes 1½ inches, 2¾ inches, 4 inches, and 5¼ inches aft from the jig hole as measured along the curved surface of the leading edge, and exactly in line with the jig hole and the rivet through the skin and nose rib flange just forward of the front spar.) Use only light pressure on drill to avoid bending rib flange where spot welds have failed. Be sure that hole is drilled through both the skin and the nose rib flange.

(*b*) On wings being recovered the Cherry rivets should be carefully drilled out before removing the fabric. Before the new fabric is applied AN 456-AD4 rivets should be installed.

2. Upper Surface Fabric Attachment—

(*a*) On covered wings install four Cherry CR 163-4-4 rivets in each rib one rivet midway between each of the fabric attachment clips (5 inches clip spacing) from No. 1 to No. 5, as numbered aft from the front spar. No. 30 holes should be drilled for the rivets through the fabric at the middle of the reinforcing tape and through the rib flange. A 7/16-inch x 0.015-inch pyralin washer should be used under each rivet head and should be stuck to the fabric with dope. On wings having PK

screws installed in accordance with Cessna Service Letter Nos. 35 and 37, replacement of the screws with Cherry rivets is optional.

(*b*) On recovering wings, the rivets should be carefully drilled out before removing the fabric to prevent damage to the ribs. When the new fabric covering is applied, standard Cessna fabric attachment clips may be substituted for the Cherry rivets of PK screws. In this event a clip should be installed midway between each of the present clips from the front spar to the rear spar and from the rear spar to the trailing edge. Holes for the additional clips should be made with a No. 40 drill and a template supplied by Cessna.

(Cessna Service Letter No. 42 dated May 20, 1947, also covers this subject and supersedes Cessna Service Letters Nos. 37 and 28.)

47–30–2 Cessna (Was Mandatory Note 12 of AD–722–5.) Applies to T–50 Aircraft.

Compliance required no later than next 100-hour inspection.

Inspect the ends of the brake pedal links, P/N 53046, for reinforcing doubler plates around the fitting holes. If the doubler is not in evidence, remove the links and rivet two 0.040 inch x ½-inch x approximately 2-inch length—24ST aluminum alloy reinforcing doubler plates to each end of each link using two ⅛-inch A17ST rivets through both doublers and the link on the far side of the joggle from the fitting holes.

47–30–3 Cessna (Was Mandatory Note 13 of AD–722–5.) Applies to All UC–78 and AT–17 Series Airplanes.

Compliance required prior to October 15, 1947.

Inspect the wing of 5,400- and 5,700-pound gross weight airplanes to determine that the wing has been properly identified as a 5,700-pound wing. The 5,700-pound wing has the following salient identification features:

(*a*) Laminated (8 to 10 ply) birch plywood reinforcement on the rear face of the rear spar (instead of spruce block found on the 5,100-pound wing) extending continuously through the center section from nacelle to nacelle. Ends of this plywood plate are scarfed out just inboard of each nacelle bearing block.

(*b*) Continuous plywood flanges 1 to 1½ x 1/16-inch are found on both sides of the lower cap strips of wing ribs between the front and rear spars on 5,700-pound wings.

(c) The diagonal in nose ribs of the 5,700-pound wing is 5/16 x 7/16 instead of 5/16 x 5/16 found in the 5,100-pound wing.

(Wings which cannot be identified as outlined above are not eligible for certification above 5,100 pounds gross weight.)

47–30–4 Cessna (Was Service Note 4 of AD–722–5.) Applies to T–50 Aircraft.

Inspect the landing gear chains and chain dampener mechanism for the following at each 100-hour inspection. The landing gear chain should be tight and pressing firmly against the drive and idler sprockets. With the chain pulling tight against the idler sprockets the slotted dampener link should permit movement of the spring dampeners. The dampener spring is correctly adjusted when compressed to ⅜ inch. All sprockets should be inspected for excessive wear. The sprockets are considered excessively worn and should be replaced when the teeth are one-half the thickness of the sprocket web. All guards should be inspected to make sure there is no danger of binding or jamming. Inspect all links of the landing gear chain for cracks and replace any links that are found cracked. It is recommended that the chain be replaced every 1,000 hours.

47–40–2 *See* Continental Engines.

47–43–1 Cessna (Was Mandatory Note 12 of AD–768–5.) Applies to 120 and 140 Aircraft Serial Numbers Up to and Including 11842.

Compliance required prior to January 1, 1948.

Reroute the lower end of the primer line located on the left side of the firewall and rotate the strainer fitting so that it points downward and to the left at an angle of 60° to the horizontal. Slip approximately 6 inches of vinylite tubing over the upper and lower ends of this primer line and install a shield around this line between the two pieces of vinylite tubing. This will preclude the possibility of fuel coming in contact with the left exhaust manifold in the event of a failure in this primer line.

(Cessna Service Letter No. 34, dated March 24, 1947, covers this same subject.)

47-43-2 Cessna (Was Mandatory Note 13 of AD-768-5.) Applies to 120 and 140 Aircraft Serial Numbers 8001 to 8480, Inclusive.

Compliance required prior to January 1, 1948.

To eliminate the possibility of confusion in the operation of the fuel selector valve, remove the embossed pointer from the selector valve handle and ascertain that the selector valve handle is installed so that the handle indicates correctly the position of the selector valve as shown by the valve placard.

47-43-3 Cessna (Was Mandatory Note 14 of AD-768-5.) Applies Only to 120 and 140 Seaplanes Operated Without Spreader Struts Between Floats.

Compliance required prior to January 1, 1948.

Due to the independent suspension of the floats, racking loads imposed by rough water operation can cause extensive structural damage. As a result, the following inspections and modifications are necessary:

1. Replace all loose and sheared rivets at the joints between the instrument panel and door posts and between the instrument panel and the fuselage skin with AD-5 rivets. In case of damage to the instrument panel at the sheared rivets, an 0.040-inch 24ST alclad channel, 1-inch wide with 5/8-inch flanges, extending the full length of the rivet pattern should be installed with one flange against and riveted to the skin and with the web picking up the rivets through the door post and panel.

2. Inspect the formed brace channel fittings which attach the front and rear door posts to the rear edge of the fuselage carry through spars for cracks in the flanges. If cracks are found the fitting should be replaced or repaired by stop drilling the crack and installing a flat 0.051-inch 24ST alclad strip, cut to the width and contour of the flange, with two or three AD-4 rivets above and below the crack.

3. Inspect the front carry through spar for cracks, particularly below the inboard bolt hole in the attachment of the door post to the spar. If cracks are found the channel should be replaced.

4. Inspect fuselage fitting, Cessna P/N 0440109, to which rear outboard float brace attaches, for cracks in flange at bolt head and along weld bead. Replace with new fitting if cracked.

5. Inspect fitting at fuselage, Edo P/N 88-S-145, to which front outboard float brace attaches, for cracks in weld at bend in top plate and at inboard end of insert where weld is ground off. If cracked, replace with revised fitting having three welded inserts at bend.

6. Replace inboard float brace struts to which outboard struts attach directly, with struts modified to incorporate a universal joint at the attachment of the outboard struts.

7. Add spreader struts, Edo P/N 88-5-175, and diagonal wires, Edo P/N 92-S-200-4, between the floats.

8. Rivet 0.051-inch 24 ST alclad doubler, Cessna P/N 0440113, to the fuselage skin below each door just aft of the main landing gear bulkhead. If the fuselage skin is buckled in this area sufficient 1/4-inch rivets should be added to the standard pattern to remove the buckles.

(Cessna Service Letters No. 45 dated July 30, 1947, and No. 47 dated August 15, 1947; Edo Drawing 88-03-00A, change 1, dated May 15, 1947; and Edo Service Bulletin No. 3 dated August 30, 1947, cover this same subject.)

47-43-4 Cessna (Was Service Note 2 of AD-768-5.) Applies to 120 and 140 Aircraft Serial Numbers 8001 to 12349, Inclusive.

Inspection required upon each 100 hours of operation until horns are reinforced.

Remove the forward part of the tunnel fairing on the cockpit floor and inspect the control cable horns on the rudder bar for signs of bending which probably is caused by excessive foot pressure during application or release of the parking brakes and results in a reduction of the rudder travel. Bent parts which can be straightened without cracking should be reinforced by the installation of Cessna P/N 0411303 or its equivalent. Cracked parts should be replaced with Cessna P/N 0310168 made of 0.080-inch steel.

(Cessna Service Letter No. 43 dated July 7, 1947, covers this same subject.)

47–43–5 Cessna (Was Service Note 3 of AD–768–5.) Applies to 120 and 140 Aircraft Serial Numbers 8001 to 13780, Inclusive.

Inspection required upon each 100 hours of operation until reinforcing channels are installed at all hinge fittings.

Inspect for fatigue cracks in the elevator spar web at the hinges. These cracks start either at the rivets or at an edge of the fitting and progress around the fitting until the elevator breaks loose from the hinge fitting. If cracks less than ½ inch in length are found a reinforcing channel, Cessna P/N 0434151 at the outboard hinge or 0434152 at the inboard hinge, should be installed on the aft side of the spar with the flanges riveted between the spar flanges and the skin with two AN 455AD3 rivets per flange. Four AN 442AD4 rivets should be used to attach each fitting to the spar web and reinforcing channel. If any cracks are longer than ½ inch the spar should be replaced and the reinforcing channels added.

(Cessna Service Letter No. 46 dated July 31, 1947, covers this same subject.)

47–43–6 Cessna (Was Service Note 4 of AD–768–5.) Applies to 120 and 140 Aircraft Serial Numbers 8001 to 10209, Inclusive.

Inspection required whenever airplane is tied down in high winds without controls locked and upon each 100 hours of operation until Cessna parts 0422200–2 and 0422200–3 are installed.

Inspect the aileron support ribs for indications of buckling or cracking, particularly in the narrow part of the web at the aft edge of the lightening hole and in the top flange just forward of the doubler plate. Any damaged support rib should be replaced with Cessna parts 0422200–2 (left) and 0422200–3 (right) which are made of 0.051-inch material and have a shorter lightening hole.

(Cessna Service Letter No. 46 dated July 31, 1947, covers this same subject.)

47–43–8 Cessna (Was Service Note 6 of AD–768–5.) Applies to All 120 and 140 Aircraft Equipped With Beech R003 Propeller Having R003–201 Blades and Continental C–85 Series Engine.

Compliance required prior to January 1, 1948, and thereafter upon completion of each 25 hours of operation.

Remove the R003–201 propeller blades and visually inspect the propeller blade retainer ferrule for cracks at the fillet joining the cylindrical outer surface of the ferrule with the retaining face of the flange. Particular caution should be exercised not to injure or contaminate the thrust bearing which must be pressed away from the flange for the inspection. The propeller manufacturer's assembly and service instructions are to be followed during disassembly and reassembly of the propeller. If any indication of a crack is found, both blades should be replaced with the R003–225 blades. The 25-hour inspection may be discontinued if R003–225 blades are installed. The R003–225 blades are sufficiently similar to the R003–201 blades to be considered aerodynamically interchangeable in the same diameter without a flight test.

(Beech Aircraft Co. propeller Service Letter No. 1 covers this same subject.)

47–50–2 Cessna Applies to 120 and 140 Aircraft Serial Numbers Up to and Including 14289.

Inspection required upon each 100 hours of operation until fuselage rear bulkhead (tail post) has been reinforced.

Inspect the lower right-hand corner of the cutout in the fuselage rear bulkhead for cracks which usually extend down to the rivet holes at the nearest anchor nut. If cracks are found, install the new type bulkhead with reinforcement channel added per Cessna Drawing No. 0412169.

(Cessna Service Letter No. 46 dated July 31, 1947, covers this same subject.)

48–5–4 Cessna Applies to 120 and 140 Aircraft.

Compliance required by April 1, 1948.

Install the following operational limitations placard in full view of pilot:

"This airplane is to be operated in accordance with the flight limitations of the Operations Manual."

This refers to the various Airplane Flight Manuals which are required equipment for landplane, skiplane, and seaplane as listed in Aircraft Specification A–768, item 403 and

Note 9, and which must be carried in the aircraft at all times. Airplane Flight Manuals may be obtained from Cessna dealers and the Cessna Aircraft Co., Wichita, Kansas.

(Cessna Service Letters Nos. 32 and 40 dated February 10 and May 6, 1947, respectively, cover this same subject.)

48–7–1 Cessna Applies to 120 and 140 Aircraft Serial Numbers 8001 Through 14329.

Compliance required by May 1, 1948, and at each annual inspection thereafter.

Inspect the two bolts attaching the horizontal stabilizer to the fin post for tightness and proper length. If no bolt threads extend through the fiber lock rings of the anchor nuts inside the stabilizer attachment fitting, or if the bolts show any indication of having backed off when checked with a wrench, they should be replaced with AN 4–5A bolts on Serial Nos. 10091 and up, or AN 3–5A bolts on earlier serial numbers. In making the tightness check use caution to avoid stripping the threads in the anchor nut. If the new bolts do not develop at least 3 inch-pounds torque in the anchor nut, AN 4–H5A or AN 3–H5A (drilled head) bolts should be substituted and safetied together with wire. Check the clearance of the elevator horn and horn bolts with respect to the cutouts in the fin spar and increase it to a minimum of ⅛ inch wherever necessary.

(Cessna Service Letter No. 52 covers this same subject.)

48–25–2 Cessna Applies to All 120 and 140 Aircraft Equipped With Cessna Welded Exhaust Muffler Assemblies.

Inspection required each 25 hours of operation.

Remove the carburetor air heater muff and cabin heater muff and inspect the muffler assemblies for any evidence of cracks paying particular attention to the areas of the mufflers and stacks adjacent to where the exhaust stacks and tailpipe are welded to the muffler assembly. The present placard calling for inspection of the mufflers every 100 hours should be revised to call for this inspection every 25 hours. This directive is intended to apply to only those aircraft equipped with exhaust muffler assemblies that are fabricated by welding exhaust stacks to muffler.

48–25–3 Cessna Applies to All 120 and 140 Aircraft.

Inspection required each 100 hours of operation.

Inspect wing drag wire system for loose or broken drag wires and inspect ribs for damage. Inspection openings should be installed aft of the rear spar just inboard of Rib 5 and just outboard of Rib 10 if not already installed. Drag wires should be rerigged if loose, or replaced if broken, and drag ribs should be repaired or replaced if buckled. No. 6 drag wires in the outer wing panel found broken are to be replaced with No. 8. Buckling of the intermediate rib flanges at the spar cutouts does not render the wing unairworthy; however, reinforcement with Cessna P/N 10004–58 is recommended. If the flanges are cracked the reinforcement should be installed.

(Cessna Service Letters 27 and 39 cover this same subject.)

48–43–2 *See* Continental Engines.

48–48–1 *See* Freedman Propellers.

50–31–1 Cessna Applies to All Models 120 and 140 Aircraft, Serial Numbers 8001 to 15035, Inclusive, on Which the 0.051 Reinforcing Channel or 0.040 Reinforcing Angles Have Not Been Installed.

Compliance required as soon as possible and not later than August 1, 1950, except as indicated below.

Because two fin spar fatigue failures have occurred in flight, indicating inadequate inspection due to the difficulty of such inspection, the fin must be removed for inspection. Inspection can then be best accomplished by removing five rivets in the fin bottom rib skin attachment and all attaching rivets through the spar and doubler flanges to permit raising the adjacent skin. The front face of the spar and the spar reinforcing channel should then be carefully inspected for flange buckles or cracks with at least an 8-power magnifying glass in the bend radii and in the adjacent flange rivet or clearance holes in the region of the bottom rib attachment. Modify in accordance with item 1 or 2 herein:

1. If failure exists, the spar must be replaced with a spar incorporating an 0.051 24ST alclad

fin spar reinforcing channel, Cessna P/N 0431129, or equivalent.

2. If no failure exists, reinforcing angles, Cessna P/N 0431145 and 1431145–1 or equivalent, must be installed.

(Cessna Service Letter No. 62 dated April 10, 1950, covers this same subject.)

Some of the first airplanes were manufactured using spot welded instead of riveted construction. The following applies to these aircraft and should be accomplished not later than September 1, 1950:

Drill out center of spots with No. 30 drill. Carefully pry skin loose from spar and root rib using a thin lever. Inspect and accomplish 1 or 2 above replacing all drilled spot welds with 1/8-inch rivets as required. In case that sheet or underlying structure is left with a damaged hole which cannot be properly filled with a 1/8-inch rivet, replace with 5/32-inch rivet or add an additional 1/8-inch rivet on each side of damaged hole.

This supersedes AD 50–17–1.

50–39–1 Cessna Applies to All Models 190 and 195 Aircraft, Up to and Including Serial Number 7586.

Inspection required not later than November 25, 1950. on aircraft having 300 hours or more service and at each 100 hours operation on all aircraft.

Service experience has indicated that close inspection of rudder cables is necessary in order to detect premature cable fraying at the forward pulley. Due to the difficulty of inspection and since some failures may have occurred in core strands, the following methods are recommended: Detach the rudder cable from the rudder bellcrank in the aft fuselage or at the rudder horn at the pedal and pull the cable through the inspection openings immediately aft of the rudder pedal or through the tunnel at the aircraft centerline in the cabin. The cable should then be carefully inspected, by flexing, at a point 9 to 10 inches aft of the swagged fitting at the forward end of the cable for broken strands. Replace all cables showing signs of breakage.

The above inspection may be discontinued when at least the next larger size pulleys are installed.

(Cessna Service Kit, SK 9050–1 provides the larger pulley and inspection opening for those aircraft prior to Serial No. 7587.)

51–10–4 Cessna Applies to Model 190 Aircraft, Serial Numbers 7004 Through 7594.

Inspection required not later than May 1, 1951, and every 25 hours of operation thereafter until new cowl mounting ring channels and channel stiffening angles are installed.

Due to cracking and failures of the cowl mounting ring channels which, if undetected, may result in the cowl moving forward into the propeller, the cowl mounting channels must be closely inspected for cracks with particular attention being paid to the sections which bear against the cowl mounting lugs. This inspection must be repeated every 25 hours of operation until the presently installed 1010 steel cowl mounting channels are replaced with 4130 steel cowl mounting channels, Cessna P/N 0352161, 0352163, and 0352163–1, and aluminum alloy cowl channel reinforcing angles, Cessna P/N 0352146, 0352147–1, 0352147–2, 0352152–5, and 0352152–6 are installed. In the event that inspection reveals any indication of cracks, the new cowl mounting channels and reinforcing angles must be installed immediately.

(Cessna Service Letter No. 13 dated March 29, 1951, covers this same subject.)

51–11–2 Cessna Applies to All Models 190 and 195 Aircraft Serial Numbers 7004 to 7474 and 7476 to 7479, Inclusive.

Compliance required not later than June 1, 1951, and upon each 100 hours of operation thereafter until reinforcing doublers are installed at outboard hinge fittings.

Inspect for fatigue cracks in the elevator spar webs at the outboard hinges. This may be accomplished by loosening the two attaching bolts as necessary to facilitate inspection for cracks at the bolt holes. Cracks extending less than 3/4 inch beyond the hinge fitting should be stop-drilled and reinforcing doublers, Cessna P/N 10008–11–2 and –3, should be installed on the forward side of the spar. If any cracks are longer than 3/4 inch, the spar should be replaced and the reinforcing doublers added.

(Cessna Service Letter No. 10 dated November 18, 1949, covers this same subject.)

51–18–1 Cessna Applies to All Model T–50 Aircraft.

Compliance required at each periodic inspection.

Two reports of loss of rudder control in flight as a result of fatigue failure of rudder torque tube have been received. Failures occur in the lower rib and pylon area. For complete inspection of the affected area, a section of the fabric should be opened by cutting along the leading edge upward to permit removal of a 10-inch section of the leading edge wood block then aft along the lower rib flange. This method will facilitate closing. (Replacement of removed wood leading edge section with lacing cord similar to original fastening is satisfactory.) Since the rudder torque tube is not heat-treated, cracks up to approximately ¾ inch in length may be stop-drilled and welded. Where cracks have progressed further, it is recommended that the lower section of the torque tube be replaced by splicing between the No. 1 and No. 2 ribs in accordance with Manual 18 practice.

This supersedes AD 47–5–2.

51–21–1 Cessna Applies to Models 120 and 140 Aircraft, Serial Numbers 8001 to 10650, Inclusive, and/or Any Other Serial Numbers Not Having Steel Reinforcing Channel, Cessna P/N 0433131 or Equivalent Installed.

Compliance required prior to December 1, 1951.

Inspect bottom rib of rudder for kinks or cracks in the rib flanges just aft of the rudder horn fitting. If there is any damage, the bottom rib assembly should be replaced with Cessna P/N 0433106, since the damage may progress until the rib breaks in two with the loss of rudder control. On installing P/N 0433106, which is an assembly of the rib, the control horn and a steel reinforcing channel (P/N 0433131), AD–4 protruding head type rivets should be used wherever rivets or spotwelds were used on the original installation; six additional rivets for attachment of aft part of steel channel to bottom rib and four AD–4 protruding head type or Cherry 163–4–4 rivets added to attach the skin to each flange of the steel reinforcing channel. If no damage to the bottom rib assembly is detected, installation of the steel reinforcing channel only is necessary. This may be accomplished by drilling out existing rivets for attachment of control horn and installing the steel reinforcing channel (P/N 0433131), above the bottom rib with flanges up, using existing rivet holes. The completed installation should be the same as for the installation of the complete lower rib outlined above. The reinforcing channel, P/N 0433131, is $4\frac{17}{32}$ long with ⅝ flanges, planform to fit inside lower rib installed as near horn flange as possible. Flanges removed on forward inch of channel. Material 0.036 1025 steel or 0.051 24ST, ALCLAD or equivalent. It is recommended that the length of the chains to the steerable tail wheel be so adjusted that under static conditions the coil springs are not extended more than ⅛ inch, since excessive tautness of the chains contributes to the rib failures.

(Cessna Service Letter No. 46, dated July 31, 1947, covers this same subject.)

This supersedes AD 47–43–7.

51–25–1 Cessna Applies to All Model T–50 Aircraft.

Compliance required prior to February 1, 1952, and as noted.

To preclude trapping water in the horizontal stabilizer forward of the rear spar which may result in glue line deterioration between laminations, compliance with the following items is necessary:

1. Grommets must be installed sufficiently near the forward face of the rear spar and outboard edge of all ribs to drain any water which may be trapped. All grommets not so located must be relocated accordingly. Marine-type grommets are recommended at least at the inboard ribs.

2. All grommets which are plugged must be opened preferably with a sharp-edged tool and/or relocated in accordance with item 1 above. Special care should be taken to make sure that foreign matter is not allowed to build up on the inside around the drain openings.

3. Where grommets are mislocated, plugged, clogged with dirt or extraneous matter or have not been installed, the rear spar must be inspected for deterioration by cutting small triangular openings at the ribs adjacent to the fuselage and at alternate ribs outboard. If lamination separation is disclosed, a new spar

should be installed or the stabilizer replaced with one having drainage provisions in accordance with item 1 above.

Upon accomplishment of the above, the grommet openings should be inspected at each 100 hours thereafter to maintain proper drainage. This inspection should include insertion of a bent or curved tool through the grommet openings to ascertain that dirt or other extraneous matter has not built up around the opening to restrict drainage. Where grommets are found clogged, inspection and compliance in accordance with item 3 above should be repeated.

This supersedes AD 44–26–1.

53–6–1 Cessna Applies to All Model T–50 Aircraft.

Compliance required as soon as possible, but not later than July 1, 1953.

To guard against the possibility of fire or smoke due to inadequate electrical protection of the landing light motor circuits, install a 10-ampere fuse or circuit breaker, in the manner shown in Figure 2 for each motor circuit.

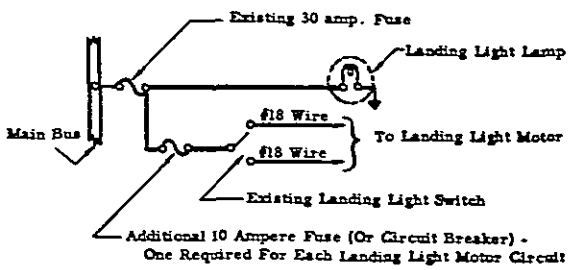

FIGURE 2

53–15–3 *See* Hartzell Propellers.

53–18–1 Cessna Applies to All Model T–50 Aircraft.

Compliance required by November 1, 1953.

As a result of reported failures of the outer bearing in the Goodrich Model 751A/M, G–3–49A, 7.50–10 main gear assembly, each resulting in loss of a wheel, the following should be accomplished if the outer bearing has not been replaced since the airplane was converted from military to civil operation. If the outer bearing has been replaced subsequent to that time, compliance only with item 1 is required.

1. Not later than the date specified above, replace the $1\frac{7}{16}$-inch washer located between the axle nut and the inner bearing cone with a washer $1\frac{7}{8}$ inch outside diameter, 0.953+0.005 inch inside diameter and 0.093+0.005 inch thick manufactured from SAE 1010 or equivalent. This precautionary measure will not prevent bearing failure but may prevent the wheel from coming off the axle during landing in the event of a bearing failure.

2. At the time of item 1 and at every 100 hours of operation thereafter until the bearing is replaced, check wheel side movement, inspect bearing and replace bearing as necessary. Replacement should be accomplished with Timken Cone No. 07100 and Cup No. 07196 or an equivalent bearing.

(B. F. Goodrich Co. Service Bulletin No. 36, revised April 20, 1953, covers this same subject and supplies information for the fabrication of the new washer and for ordering proper replacement bearings.)

54–2–2 *See* Federal Equipment.

55–4–1 *See* Federal Equipment.

56–21–2 Cessna Applies to All Model T–50 (AT–17 Series and UC–78 Series) Aircraft.

Compliance required on or before the next periodic inspection but not later than January 1, 1957, and at each periodic inspection thereafter.

Receipt of reports of spar deterioration subsequent to the corrective measures of AD 49–20–1 necessitates repetitive and detailed inspections. It is therefore requested that the rear spar just outboard of the fuselage fittings in the area of the inside corner of the fuel tank compartment be inspected annually for indications of wood deterioration of the spar.

To accomplish the inspection, remove a section of plywood wing covering 6 inches x 4 inches adjacent to and outboard of the rear spar fuselage fittings and/or remove the fuel tank. If the inspection reveals any evidence of deterioration or separation at glue lines, removal of the lower cap strip between ribs in the affected area for detail inspection is required. To facilitate periodic inspection a permanent inspection opening may be incorporated provided it is reinforced to maintain strength equivalent to the original panel.

If spar deterioration does not exceed 1 inch of spar depth the spar may be repaired by the following method: Remove the damaged wood of the spar and fit with a matched inlay by gluing to the spar with the ends of the inlay tapered in a ratio of no less than 15 to 1. A

bottom reinforcing strip or plate of an approximate thickness of 0.4 of the depth of thickness of the inlay with a maximum of 0.4-inch thickness is to be matched and glued to the bottom surface of the spar. This bottom reinforcing strip should extend approximately 3 inches beyond the end of the glue line of the inlay strip. The installation of this reinforcement plate may require a rework of the spacer block at the attachment fitting and a rework of the fore and aft stringers where they attach to the bottom surface of the spar. The following contingencies apply in the repair of the spar:

(1) In the "5,700 pound" wing spar, the material for the inlay lamination and bottom reinforcement strip or plate should be fabricated from birch, maple or its equivalent.

(2) In the "5,100 pound" wing spar, the material for the inlay lamination and bottom reinforcement strip or plate may be fabricated from spruce.

Workmanship, gluing process, quality of materials and other limitations and repair requirements of CAM 18 apply except where otherwise noted. After completion of the spar repair and repair or replacement of deteriorated gussets, stringers, etc., as necessary, drain holes should be incorporated in wings if not already installed. If the drain holes are installed it should be ascertained that they are open. The felt padding under fuel tanks should be inspected for evidence of absorption of moisture, and the padding replaced, if necessary, with neoprene coated felt or equivalent nonabsorbing material.

This supersedes AD 49–20–1.

57–4–1 Cessna Applies to All Model 310 Aircraft Prior to and Including Serial Number 35392, Except Those Incorporating Aileron Hinges Having P/N 0824006–1 and –2.

Compliance required not later than April 15, 1957, and at 100-hour intervals of operation thereafter.

Inspect the outboard aileron hinge for cracks in the upper flange, adjacent to the bearing. Any hinges found cracked should be replaced with the new, redesigned outboard aileron hinge (P/N 0824006–1 left, and 0824006–2 right). When the redesigned outboard aileron hinge is installed, this special inspection is no longer required.

To facilitate hinge replacement, it is permissible to cut a standard size inspection opening in the wing lower skin, below the outboard hinge, attachment point.

(Cessna Service Bulletin No. 310–7 covers this same subject.)

58–4–2 *See* Hartzell Propellers.

58–8–2 Cessna Applies to All 1958 Model 172 Aircraft, Serial Numbers 36216 and up.

Compliance required before next flight, unless already accomplished, and at least every 25 hours thereafter, except that the airplane may be flown to place of inspection with cabin air control in "off" position. The 25-hour inspection may be discontinued upon inspection and installation of Cessna Service Kit SK–172–10.

A recent accident occurred because the pilot and passengers became unconscious due to carbon monoxide which was released into the cabin heat system through a hole in the exhaust cabin air heater muffler, Cessna Part 0550157–32.

To prevent recurrence of similar incidents and to detect cracked or failed heater mufflers, the following inspection is required:

The exhaust cabin air heater assembly should be removed and disassembled by removing the shroud, Cessna Part 0550157–52. Make a visual inspection of the heater muffler for cracks, or submerge muffler in water and pressure test at 50 p.s.i. Particular attention should be given the cylindrical surface containing the heat transfer pins. If cracks are found in this area, the muffler is to be replaced.

Even though SK–172–10 has been installed, if occupants experience headache, drowsiness, sluggishness, or smell exhaust gases, the cabin air heater and any other openings in the firewall into the engine compartment should be immediately closed and fresh air admitted into the cabin. Inspect the cabin heater and entire exhaust manifold before next flight. If cracks are found, replace the defective part before further operation.

(Cessna Service Letter 170/172–11 dated February 3, 1958, covers this same subject.)

58–9–2 *See* Hartzell Propellers.

59–10–3 Cessna Applies to Cessna Models 172, Serial Numbers 28000 Through 36003; 180, 180A, Serial Numbers 30000 Through

32991; 182, 182A, Serial Numbers 33000 Through 34500.

Compliance required by July 15, 1959.

The Narco Model 300 position light flasher is of non-fail-safe design and to comply with the Civil Air Regulations a three position switch should be installed to permit steady operation of the lights in case of flasher failure. In addition, a means should be provided to enable the pilot to tell when the flasher has failed. Plexiglas reflectors at the wing tip lights or a monitor light on the instrument panel are acceptable means. The Van Dusen flasher (Cessna P/N 0511309–1) is acceptable as a fail-safe design.

(Cessna Service Letter 180/182–41 covers this same subject.)

61–6–2 Cessna Amdt. 263 Part 507 Federal Register March 11, 1961. Applies to All Model 150 Airplanes, and Model 150A Airplanes With Serial Numbers 15059019 to 15059054 Inclusive.

Compliance with paragraph (a) required within 10 hours of flight time after the effective date of the adopted rule.

Compliance with paragraph (b) required as indicated.

Hazardous failures of the right-hand exhaust gas cabin air heat muffler have occurred in service. These failures are such that carbon monoxide from the exhaust gases will be released into the cabin.

To improve the safety level of the cabin air heater, the following must be accomplished:

(a) Inspect the right-hand exhaust gas cabin air heat muffler to determine the muffler configuration as follows, unless already accomplished: (Airplanes with Serial Numbers 17,704, 17,717, 17,771, 17,779, 17,828, 17,839, 17,846, 17,850, 17,853, 17,855, and higher had the configuration No. 4 muffler installed when the airplanes left the manufacturer's plant).

(1) Remove the right-hand muffler from the engine.

(2) Determine the configuration of the right-hand mufflers installed on the affected airplanes as follows:

(i) Configuration No. 1: This muffler is identified by the two half-moon welds which run parallel to the length of and near the top of the muffler where the exhaust tube attaches. The exhaust tube is butted against the upper skin and welded on the inside, which appears similar to a light weld on the outside.

(ii) Configuration No. 2: The exhaust tube penetrates the upper skin of the muffler and is welded by two small welds which are crosswise to the length of the muffler.

(iii) Configuration No. 3: The muffler skin is slotted to allow the exhaust tube to project through the top skin. This area is then welded from the outside, which produces two heavy half-moon exposed welds which run parallel to the length of the muffler.

(iv) Configuration No. 4: This muffler is identified by the exhaust tube projecting completely through the upper skin of the muffler. This tube is welded to the upper muffler skin forming an outside weld bead extending completely around the exhaust tube. A cap is also welded to the top of the exhaust tube. This muffler is also identified as Cessna P/N 0450338–62.

(3) Replace all Configuration No. 1 right-hand mufflers with either Configuration No. 2, 3, or 4 (Cessna P/N 0450338–62) right-hand mufflers.

(4) Inspect all right-hand mufflers by conducting a pressure test of 1½ p.s.i. or the alternative inspection method described below.

(5) Replace any cracked muffler. (Cessna P/N 0450338–62 mufflers may be used to replace Configuration No. 2 or 3 mufflers.)

(b) The removal and inspection outlined under (a)(1) and (a)(4) or, in lieu thereof, the alternative inspection method described below and the replacement of (a)(5), if applicable, shall be repeated on all right-hand mufflers in accordance with the following schedule:

Configuration 2 and 3—Every 50 flight hours for the first 200 flight hours after initial inspection, and every 100 flight hours thereafter.

Cessna P/N 0450338–62—Every 100 flight hours after initial inspection.

An alternative method of inspection which may be used in lieu of the removal and inspection requirements of (a)(1) and (a)(4) and in the repetitive inspections required under (b) may be accomplished by a ground test using a carbon monoxide indicator. The airplane shall be headed into the wind and the

engine warmed up on the ground. Advance throttle to full static r.p.m. with the cabin heater "ON." With a dependable carbon monoxide indicator, take carbon monoxide readings of the heated air stream at the cabin heater deflector (P/N 0411824) on the firewall inside the cabin. Take another reading in free air 15 feet in front of the propeller. If carbon monoxide in the cockpit is greater than in the free air, conduct a pressure test of 1½ p.s.i. on the muffler. If no cracks are found, the muffler may be reinstalled. If the muffler is found to be cracked, it shall be replaced.

(Cessna Service Letters No. 150–15 dated March 28, 1960, and 150–23 dated January 17, 1961, pertain to this subject.)

This supersedes AD 61–1–1.

This directive effective March 22, 1961.

61–17–1 Cessna Amdt. 322 Part 507 Federal Register August 17, 1961. Applies to All Models 190 and 195 Series Aircraft With 4,500 or More Hours' Time in Service.

Compliance required as indicated.

As a result of a fatal accident caused by fatigue failure of the front wing spar fuselage carry through lower cap a special X-ray inspection was required on all aircraft with 4,500 or more hours' time in service by a previous airworthiness directive. It has been determined by subsequent evaluation that this part must be repetitively inspected as follows to insure continuous airworthiness.

(a) Aircraft on which the special inspections specified in Item (c) have not been accomplished must be inspected upon the accumulation of 4,500 hours' time in service, except that aircraft which have accumulated 4,450 or more hours' time in service on the effective date of this AD, must be inspected within the next 50 hours' time in service. These aircraft must be reinspected at intervals not to exceed 2,500 hours' time in service until the aircraft total time in service reaches between 9,000 and 10,000 hours during which time the aircraft must be inspected. Thereafter, the aircraft must be reinspected at intervals not to exceed 1,000 hours' time in service.

(b) Aircraft which have had the special inspections specified in Item (c) accomplished must be reinspected within 2,500 hours' time in service since the special inspection was accomplished. These aircraft must be reinspected at intervals not to exceed 2,500 hours until the aircraft total time in service reaches between 9,000 and 10,000 hours during which time the aircraft must be inspected. Thereafter, the aircraft must be reinspected at intervals not to exceed 1,000 hours' time in service.

(c) (1) Inspect using X-ray method or FAA approved equivalent for cracks in the lower cap of the front spar fuselage carry through member at both left and right side of the fuselage in area of the two most inboard steel rivets.

(2) Remove rear spar to fuselage attachment bolts and visually inspect these bolts using at least a 4-power magnifying glass or equivalent for evidence of wear or partial shear failure.

(3) Inspect the rear spar to fuselage fittings of both the wing structure and carry through structure including the bolt bushings for wear or hole elongation.

(4) Visually inspect the steel plates of the rear spar to fuselage attachment fittings on the wing for cracks, using at least a 4-power magnifying glass or equivalent.

Visual and X-ray inspections must be conducted in accordance with Cessna Service Letter 190/195–1 dated May 13, 1960, or an FAA approved equivalent.

(d) If any of the conditions specified in Item (c) are found, the part must be replaced or an FAA approved repair made prior to further flight. Replaced front spar fuselage carry through members shall be inspected at 4,500, 7,000, 9,500 hours' total time in service for the spar and every 1,000 hours' time in service thereafter.

This supersedes AD 60–11–2.

This directive effective September 16, 1961.

61–25–1 Cessna Amdt. 376 Part 507 Federal Register December 9, 1961. Applies to All Models 120, 140, and 140A Aircraft, On Which A Met-Co-Aire Tricycle Landing Gear (STC SA4–916) Has Been Installed.

Compliance required as indicated.

To correct an unsafe condition in the main gear the following shall be accomplished:

(a) Within 20 hours' time in service after the effective date of this AD and at periods thereafter not to exceed 100 hours' time in service:

(1) Tighten and torque to 50–70 inch-pounds the four AN 4 bolts (two on each side)

which extend through the Cessna main gear wedges and the Met-Co-Aire support plate, P/N RD–1001C–11. Care should be taken to insure that the AN 365 stop nuts have not bottomed on the bolt threads before adequately tightening the wedge in place as specified above; use metal washers under the nut or bolt heads as necessary.

(2) Conduct a close visual inspection for cracks in the corners of the slots in the support plate, P/N RD–1001C–11, and in the attach plate. Parts exhibiting evidence of cracks shall be replaced with Met-Co-Aire P/N RD–1001C–6 or FAA approved equivalent. When a new part is installed, the repetitive inspection prescribed in this subparagraph may be discontinued.

(b) Within 20 hours' time in service after the effective date of this AD:

(1) Inspect the attachment of the top flanges of the bulkheads in the landing gear attachment box and perform such work as necessary to assure that all rivets which secure the box to the floor structure are properly installed. Refer to Met-Co-Aire installation instructions dated August 29, 1959, as revised January 1, 1961, for description and location of necessary rivets.

(2) If installed, remove the adapter plates, Cessna P/N 0441147, which may have been used to extend the main gear wheels forward.

(Met-Co-Aire Service Directive SD–1003 covers this same subject.)

This directive effective December 20, 1961.

62–17–4 *See* Edo Equipment.

62–22–1 Cessna Amdt. 494 Part 507 Federal Register October 16, 1962. Applies to All Models 150, 175, 175A, 175B, and 175C Aircraft Equipped with Continental Engines O–200–A, GO–300–A and GO–300–C Modified to Incorporate Airborne Mechanisms Model 113A5 Vacuum Pumps (Supplemental Type Certificates Nos. SA1–630 and SA1–610 Amended March 13, 1962, Issued to Airborne Mechanisms Division of Randolph Manufacturing Co.).

Compliance required within the next 10 hours' time in service after the effective date of this AD.

In order to prevent failure of the Airborne Mechanisms Model 113A5 vacuum pump because of improper installation, remove and reinstall the pump as follows:

Mount the pump and then remove it from the engine drive pad. The coupling will remain in the engine spline and the separation will occur between the pump shaft and the coupling. The coupling must then be pressed $\frac{1}{16}$ inch further into the engine spline. Reinstall the pump, and insure that the steel cross vanes protrude approximately $\frac{1}{16}$ inch from the hub of the coupling.

(Airborne Mechanisms Service Letter No. 4 dated May 15, 1962, entitled "Installation Interference of Model 113A5 Drive Splines" covers this same subject.)

This directive effective October 31, 1962

62–24–3 Cessna and Silvaire Amdt. 505 Part 507 Federal Register November 10, 1962. Applies to All Cessna 120, 140, or 140A Aircraft and All Silvaire (Luscombe) 8E, 8F, or T8F Aircraft Modified to Incorporate McKenzie Aircraft Repair, Inc. Installations of Various Lycoming Engines in Accordance With Supplemental Type Certificates Nos. SA4–95, SA4–173, SA4–376, SA4–581, SA4–629, SA4–639, SA4–640, SA4–641, SA4–642, SA4–1159, SA4–1201, and SA4–1286 and With FAA Engineering Approved Repair and Alteration Forms ACA–337 Dated March 30, 1955, and June 21, 1955.

Compliance required as indicated.

Failures of the exhaust stacks have occurred in the area of the cabin heat muffs. Such failures can cause hazardous carbon monoxide contamination of the cabin when cabin heat is used. To preclude additional failures and cabin CO contamination, accomplish the following:

(a) If continued use of the cabin heat system is desired:

(1) Within the next 10 hours' time in service after the effective date of this AD:

(i) Render the cabin heat system inoperative by positively securing the heat control in the "OFF" position; or

(ii) Install, adjacent to the cabin heat control, a placard with the following wording, "DO NOT USE CABIN HEAT—CONTROL MUST REMAIN IN 'OFF' POSITION."; or

(iii) Accomplish the inspection and rework required by (2).

(2) Unless already accomplished in accordance with (a)(1)(iii), not later than 50 hours' time in service after the effective date of this AD:

(i) Remove the cabin heat muff and perform a visual inspection of the exhaust stack for cracks. Pay particular attention to the area where the muff attaching straps are welded to the stack. Reinspect at intervals not to exceed 50 hours' time in service. Replace or repair by welding all cracked stacks;

(ii) Cut off the cabin heat muff attaching straps adjacent to the welds. Discard the straps and reattach the heat muff to the stack in accordance with McKenzie Aircraft Repair, Inc. Service Bulletin No. 1 dated September 6, 1962, or an FAA approved equivalent;

(iii) Unsecure the heat control required by (a)(1)(i), if secured; and

(iv) Remove the placard required by (a)(1)(ii), if installed.

(b) If use of the cabin heat system is not desired:

(1) Within the next 10 hours' time in service after the effective date of this AD:

(i) Remove the cabin heat muff and associated ducting and controls; and

(ii) Close any openings in the firewall that result from the removal of the ducting and controls in accordance with Civil Air Regulations 3.624.

(2) The cabin heat system may be reinstalled upon compliance with (a)(2)(i) and (ii).

This directive effective November 21, 1962.

CHAMPION

46–36–1 *See* Continental Engines.

47–20–1 *See* Aeronca Aircraft.

47–20–2 *See* Aeronca Aircraft.

47–30–1 *See* Aeronca Aircraft.

47–30–5 *See* Aeronca Aircraft.

47–50–5 *See* Edo Equipment.

48–4–2 *See* Aeronca Aircraft.

48–8–2 *See* Cleveland Equipment.

48–39–1 Aeronca Applies to All Model 7 Series Aircraft.

To be accomplished as soon as possible but not later than November 1, 1948.

Inspect front and rear control stick socket castings, P/N 2–705, for cracks at the ears to which the push-pull tube attaches. If found cracked, the castings should be replaced. To prevent future failures the bolt, nut and washer now installed are to be replaced with a clevis bolt, AN 24–16 (11/16 grip) and an AN 320–4 shear nut so that excessive loads cannot be placed on the socket ears.

49–11–2 *See* Aeronca Aircraft.

56–4–1 Champion Applies to Model 7EC Aircraft, Serial Numbers 300 to 370 Inclusive.

To be accomplished as soon as practicable but not later than April 1, 1956.

Inspect front and rear control stick socket castings, P/N 2–705, for cracks at the ears to which the push-pull tube attaches. If found cracked, the castings should be replaced. If a standard AN bolt, nut and washer are installed, replace with a clevis bolt, AN 24–16, ($11/16$ grip), and an AN 320–4 shear nut so that excessive loads cannot be placed on the socket ears.

57–20–1 Champion Applies to Model 7FC, Serial Numbers 2 to 56, Inclusive.

Compliance required at next periodic airplane inspection but not later than November 15, 1958.

To prevent the entry of fire and fumes into the cabin compartment in the event of a powerplant fire, install Champion fireproof steering link boot assembly P/N 2–1523 to the firewall with suitable fireproof screws.

(Champion Service Letter No. 31 covers this same subject.)

COLONIAL

(See Lake Aircraft Corp.)

COMMONWEALTH

46–36–1 *See* Continental Engines.

47–40–2 *See* Continental Engines.

48–6–2 Commonwealth Applies to Models 175, 180, 180F, 185, and 190F Aircraft.

Compliance required by March 15, 1948.

Inspect the jury struts for indication of excessive corrosion (inside) or cracks and if either is noted, replace the jury strut. Drill a 1/8-inch diameter hole at the lower rear edge of all jury struts to provide adequate drainage.

CONVAIR

(See General Dynamics)

CULVER

(*See Superior Aircraft Co.*)

CURTISS-WRIGHT

(See L. B. Smith)

47–51–2 Curtiss-Wright Applies to All Model C–46 E and F Horizontal Stabilizer and Elevator Assemblies.

Compliance required by March 1, 1948.

The attachment bolts in the elevator hinges and the spring and trim tab bellcranks, located in the stabilizer, tend to loosen with resultant elongation of the holes and grooving of the bolts.

1. Replace the eight AN 5–14 hinge bolts on the 20–130–5701 elevator installation with NAS 55–14 or AN 175–14 bolts.

2. Replace the eight AN 4–26 bolts on the 20–130–5700 elevator installation with NAS 54–26 or AN 174–26 bolts.

3. Replace four AN 23–11A and two AN 23–12A bolts through 20–110–5020 or 20–110–5112 blocks on each of the outboard stabilizer ribs with four NAS 53A–7 or AN 173–7A and two NAS 53A–10 or AN 173–10A bolts. Replace six existing bolts on each of the inboard hinges with NAS 53A–7 or AN 173–7A bolts.

4. Fabricate spacers from 24ST material having an O. D. of 0.590 to 0.594 inch, 1.562 +0.005, −0.000 inches in length and drill concentric hole lengthwise 0.250 inch in diameter. Install spacer between the two hub bearings on "Idler Assem-Elev Trim Tab" P/N 20–530–5722 and "Idler Assem-Elev Trim Tab (L.H.)" P/N 20–530–5775 so that the AN 24 bolts attaching the idlers to their mating bracket may be so tightened as to prevent rotation of the bolt in the inner bearing race or in the holes of the bracket.

5. Fabricate 0.75 diameter ×1.012 inches +0.005, −0.000 spacers (Curtiss P/N 20–530–5709–1201) from 24ST alclad and drill 0.250. Install these spacers between the two hub bearings in the 20–530–5709 spring tab bellcranks.

6. P/N 1007–D–4–250 shoulder bushings should be installed in each 20–130–5775–2 bracket.

47–51–3 Curtiss-Wright Applies to Model C–46E Serial Numbers AAF43–47403 Through 43–47419 and Model F Aircraft.

Inspection required every 100 hours of operation until rework is accomplished.

The aileron closure rib assembly 20–030–5039 has failed on some aircraft by cracking at the point of attachment to gusset and adjacent to the bolts which secure the aileron hinge assembly.

1. The rib assembly should be inspected and if cracks are found the following rework should be accomplished:

(*a*) Remove the aileron from the airplane.

(*b*) Remove aileron hinge assembly 20–030–5042 from the aileron closure rib 20–030–5039 located at wing station 273.875.

(*c*) Drill out the ten 671D–5AD–5 rivets and two C71D–5AD–8 rivets which secure gusset 20–030–5039–6 to the bottom of ribs 20–030–5039–504 and 20–030–5039–505.

(*d*) Drill out the eight AN 442AD–5 rivets which secure gusset 20–030–5039–6 to the sides of ribs 20–030–5039–504L and 20–030–5039–505.

(*e*) Open the inspection doors nearest each side of the aileron closure rib assembly.

(*f*) Working through these inspection doors drill out the fourteen AN 442AD4–4 rivets which secure angles 20–030–5039–3 to the sides of the ribs 20–030–5039–504 and 20–030–5039–505. It will not be necessary to remove the twenty-eight 671D–4AD–4 rivets which secure the angles 20–030–5039–3 to the wing trailing edge closure skin.

(*g*) Working through same inspection doors drill out the eighteen AN 442AD4–4 rivets which secure the angles 20–030–5039–506 to ribs 20–030–5039–504 and 20–030–5039–505. The ribs are now free and can be removed from the airplane.

(*h*) Fabricate new lower ribs 20–030–5037–504 and 20–030–5039–505 using the removed ribs as templates.

(*i*) Fabricate one left-hand and one right-hand angle "A" 7.06 inches long x 0.90-inch leg x 0.70-inch leg, bend radius 0.09, from 0.064-24SO - ALC (AN–A–13 Condition A) and heat treat to 56,000 p.s.i. (Spec. AN–QQ–H–186).

(*c*) Place antiheat shield over the flexible hose and mount the shield on the engine mount by use of the clamps shown in Figure 1. The shield should be centered over the flexible hose. It may be necessary to rebend the metal feathering line slightly to achieve proper centering.

(*d*) Upon completion of installation, check operation of propeller feathering system.

(The above information is also contained in Army Air Forces Technical Order 01–25L–105 dated April 2, 1947. Copies of this Technical Order are not available for distribution by the FAA.)

47–51–5 Curtiss-Wright Applies to Model C–46E Serial Numbers AAF43–47403 Through 43–47419, and Model F Aircraft.

Compliance required by March 1, 1948.

The aileron horns part 20–050–5715 have failed due to cracking of the horn between the attaching bolt holes and the outer edge. Inspection should be made to determine if this part has been replaced by P/N SK–10213. If not, part 20–050–5715 which is a casting should be replaced by a machined horn manufactured from 24ST material in accordance with Curtiss-Wright Drawing No. SK–10213.

(Army Technical Order 01–25L–102 also covers this same subject.)

47–51–7 Curtiss-Wright Applies to All C–46 Series Aircraft.

Compliance required not later than March 1, 1948, and each 1,000 hours of operation thereafter.

Inspect the landing gear drag strut support structure inside nacelle to determine if landing gear drag strut No. 20–720–1018 attaching bolts at the 70 percent spar have loosened and if angle assembly 20–720–1024–1 and bulkhead assemblies 20–720–1021–1 and 20–720–1023–6 are loose. All defective parts, loose or sheared attachment rivets should be replaced and loose bolts tightened.

To accomplish the above, it is necessary to remove one outer panel or provide an access door in order to gain access to the interior of the center panel.

(Curtiss-Wright Service Information Letter No. 735 dated August 20, 1947, covers an acceptable wing panel door installation.)

48–3–5 Curtiss-Wright Applies to All C–46 Series Aircraft.

Compliance required by March 1, 1948.

To eliminate hydraulic leaks which can cause a fire, hydraulic tube P/N 20–575–1116–64 located at fuselage Station 50.5 between the brake accumulator and brake metering valve, should be inspected for evidence of chafing on tube assembly tension arm P/N 20–530–1130–1. If insufficient clearance exists, the hydraulic lines must be rerouted and damaged lines replaced.

48–44–2 Curtiss-Wright Applies to All C–46 Series Aircraft.

Compliance required at original certification and at every 7,500 hours of operation thereafter, or at the approved airframe overhaul period for air carriers.

Check the center wing-to-fuselage attachment bolts, P/N AN 8–23A, AN 8–25A, and AN 8–31A, to determine that they are properly torqued. The proper torque value for these bolts is between 480 to 690 inch-pounds as per Curtiss-Wright Drawing No. 20–230–1000.

For access to the 30 percent spar fitting, a 1½-inch diameter hole can be cut in the wing center section lower skin beneath the fitting, just forward of the beam, and far enough inboard so that the resultant opening will be completely covered upon reinstallation of the wing foot fairing.

This supersedes AD 47–51–6.

49–12–1 Curtiss-Wright Applies to All C–46A, C–46D, C–46E and C–46F Airplanes.

To be accomplished as soon as possible but not later than the next 25 hours of operation and at each 500 hours of operation thereafter.

Inspect the aileron trim tab motor support bracket (P/N S–20–030–5050) attached to the aft face of the 70 percent rear spar at wing Station 178.36 for cracks. Defective parts should be replaced.

49–18–1 Curtiss-Wright Applies to All Models of C–46 Series Airplanes Used in Passenger Operation Under Provisions of Part 41, 42, or 61 of the Civil Air Regulations as Specified in Sections 41.20 (f), 61.30 and Amendment 42–8.)

To be accomplished not later than the dates specified in above amendments as revised by

Special Civil Air Regulation No. 329 and any subsequent regulations affecting these compliance dates.

(This AD pertains only to combustion heater fire protection aspects of the above Regulation Amendments. Separate AD's will be issued covering fire protection for the powerplant installation and for the baggage and cargo compartments of the airplane.)

(1) Each heater exhaust pipe shall be completely enclosed with well-ventilated, fireproof shrouds.

(2) Each heater combustion chamber shall be drained to the exterior of the airplane. All such drain lines shall be of fireproof construction and contain no traps in the normal flight or ground attitudes.

(3) The heater fuel components presently mounted on top of each heater shall be located in fuel and fume proof enclosures, ventilated and drained to the exterior of the airplane.

(4) The thermal overheat switches for each heater shall be rigged to shut off the fuel supply and ignition circuits of the heaters when overheating occurs. These switches must also be arranged so as to prevent their automatically recycling to "ON" once overheating has occurred. The present overheat switches are not intended to be used as cycling switches. In cycling to produce the required heat is necessary, it must be accomplished at a lower temperature by an additional cycling switch controlling a cycling solenoid.

(5) A manual fuel shutoff valve shall be provided. (USAF Technical Order 01-25LA-211 describes such an installation.)

(6) Adequate fire extinguisher and fire detector installations shall be provided for each heater. The fire detector installation shall contain at least one detector centrally located over the heaters in the heater area and one detector in the ventilating air duct of each heater just aft of the combustion chamber. The fire extinguisher system should provide at least 1 pound of CO_2 for each heater directed into the inlet side of the ventilating air stream. Instructions for operating this CO_2 system should also require that the ventilating air duct valve be closed when CO_2 is injected to the heater. With the arrangement as described, no flight tests of CO_2 contamination of the pilots compartment or cabin area need be conducted. As outlined in the Airworthiness Directive concerning fire protection for the baggage and cargo compartments, however, flight tests to establish smoke evacuation procedures for the cargo compartments when these compartments are carrying cargo, will need to be accomplished. The results of these tests will determine the procedure to be followed to rid the airplane of noxious gases.

(7) Revision pages for the Airplane Flight Manual must be prepared to cover emergency fire procedures as well as smoke and other noxious gas elimination procedures.

49–25–1 Curtiss-Wright Applies to All Models of C–46 Series Airplanes Used in Passenger Operation Under Provisions of Part 41, 42, or 61 of the Civil Air Regulations as Specified in Sections 41.20 and 61.30 and Amendment 42–8.

To be accomplished not later than the dates specified in the above amendments, as revised by Special Civil Air Regulation No. 329, and any subsequent regulations affecting these compliance dates.

When engaged in passenger-carrying operations, all applicable cargo-compartment fire-prevention measures including those concerning controls, wiring, lines, equipment, tie-down and lining materials, etc., must be complied with unless these cargo compartment(s) are not utilized and are placarded accordingly.

(NOTE: This Airworthiness Directive pertains only to the baggage and cargo-compartment fire-protection aspects of the above Regulation Amendments. Airworthiness Directives 49–19–1 and 49–18–1 have been issued covering fire protection for the powerplant installation and for the cabin-heater installation, respectively.)

(1) Lower Forward Cargo Compartment. When access provisions suitable for ready entrance by a crew member are available for use, the lower forward cargo compartment can be classified in the "B" category and as such must meet the requirements of CAR 4b. (It is recommended that a mask suitable for protecting a crew member from the effects of both smoke and fire-extinguishing agents be provided, since entry into the compartment will be a necessary part of any fire-fighting procedure.)

(NOTE: That portion of 4b requiring cargo-compartment fire-detection means need not presently be complied with.)

(2) Lower Rear Cargo Compartment. This compartment must be considered a "C" category compartment unless provisions suitable for ready entrance by a crew member are provided. As a "C" category compartment, compliance with CAR 4b must be shown. If the compartment is modified to provide suitable access, compliance with the requirements of CAR 4b for a "B" category compartment must be demonstrated.

(NOTE: That portion of 4b requiring cargo-compartment fire-detection means need not presently be complied with.)

(3) It must be demonstrated that hazardous quantities of smoke or extinguishing agent cannot enter crew or passenger compartments as a result of a cargo-compartment fire. If the cargo compartment is determined to be in the "B" category, utilizing portable fire extinguishers, it is not necessary to test for excessive extinguishing agent concentrations. "C" category compartments protected by built-in, remotely operated fire extinguishing systems will necessitate tests to determine that hazardous quantities of the agent cannot enter crew or passenger-occupied areas. Crew and passenger compartment smoke evacuation procedures must be established.

Tests to determine smoke evacuation procedures, and, where necessary, to determine fire-extinguishing-agent concentrations in crew or passenger compartments, should simulate fire conditions as nearly as possible in flight. Where it can be established that the airplane is identical or sufficiently similar to others on which tests have been conducted, it will not be necessary to repeat these tests.

(NOTE: Carbon-dioxide concentrations in excess of 3 percent by volume in crew compartment are considered hazardous.)

(4) The provisions of Safety Regulation Release No. 259, "Compliance of Equipment and Materials Used in Air-Carrier Aircraft with Fire-Prevention Requirements," must be considered in demonstrating compliance with this directive.

(5) Airplane Flight Manual. Appropriate changes to the Airplane Flight Manual shall be prepared to cover the emergency procedures associated with cargo- and baggage-compartment fire control.

50–22–1 *See* Pratt & Whitney Engines.

50–26–1 Curtiss-Wright Applies to All C–46A, D, E and F Aircraft.

Compliance required not later than August 1, 1950, and at each 500 hours thereafter.

Thoroughly inspect the landing gear side braces P/N 20–310–1028 and 20–310–1029 for cracks in the vicinity of the welds at either end of the struts, using magnetic or X-ray inspection.

If cracks are found, the following will apply:

1. For one crack only in the weld proper less than ½ inch in length and 0.060-inch deep that does *not* penetrate into the tube member itself, stress relieve by grinding out the crack and polishing to remove all grinding marks. No rewelding required.

2. For more than one crack in the weld proper or cracks larger than those mentioned in item 1 that do *not* pentrate into the tube member itself, repair by grinding out the cracks and rewelding in a welding jig (using the oxyacetylene torch method) and reheat treat the tube assembly to 180,000 p.s.i. and Rockwell C–38.

3. If cracks are found in the tube member itself, the part should be replaced by a completely new assembly or repaired by replacing the tube and refabricating to the original specifications.

4. P/N S51E105 is considered a satisfactory replacement for P/N 20–310–1028. When P/N S51E105 is installed it should be inspected by magnetic particle or X-ray method of inspection prior to initial installation and at periods not to exceed 1,000 hours of operation thereafter.

This supersedes AD 50–19–1.

50–29–1 Curtiss-Wright Applies to All Models C–46A, C–46D, C–46E and C–46F Aircraft.

Compliance required as soon as practical but not later than the next 25 hours of operation and at each 200 hours thereafter.

Inspect the lower surface of the wing center section for loose rivets (5/32–A17ST modified brazier head) in the area of the front and rear

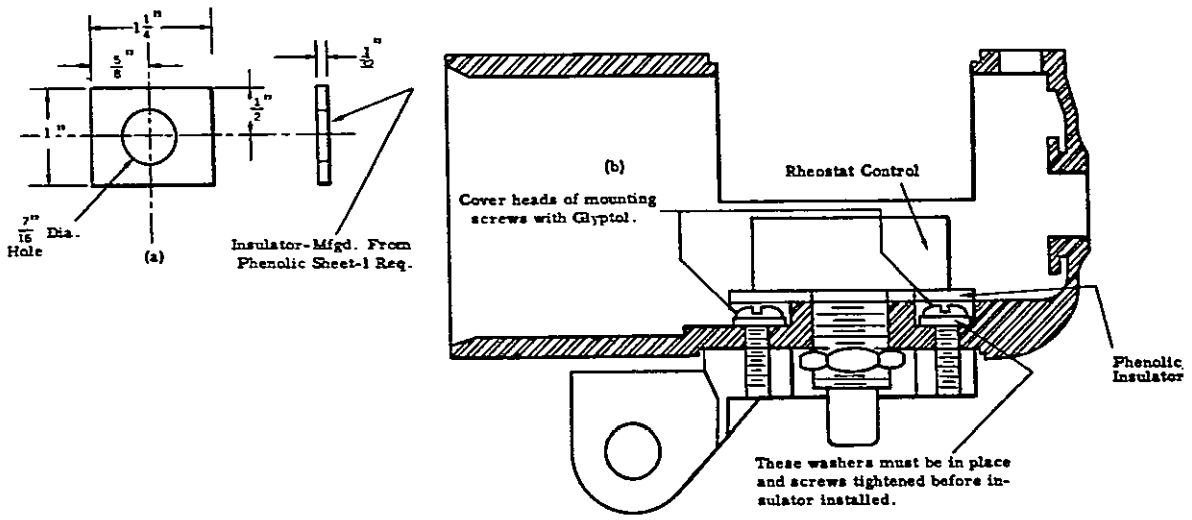

SECTIONAL VIEW OF COCKPIT LIGHT CASE - TYPE C-4A & C-4, WITH RHEOSTAT INSULATOR INSTALLED.

FIGURE 2

spars between Stations 82.5 and 107.5. If more than 50 rivets are found loose along either the front or rear spar on either R.H. or L.H. wing center section between the stations mentioned above, they should be replaced immediately following the procedure outlined by Civil Aeronautics Manual 18.20–3 (e) (4) (ii) (a).

If less than 50 rivets are found loose at any of the above specified locations, the rivets need not be replaced until the time of next major overhaul.

51–10–6 Curtiss-Wright Applies to All Model C–46 Series Aircraft.

Compliance required at next periodic inspection, not to exceed 100 hours, and each 200 hours or nearest regular inspection period thereafter.

Inspect all aileron, rudder and elevator hinge fittings and adjacent structure for cracks, loose rivets, worn bolts and condition of bearings. If defects are found, the part should be replaced by an undamaged part or repaired.

This supersedes AD 50–14–1.

51–20–1 Curtiss-Wright Applies to All C–46A, D, E and F Aircraft Equipped With C–4 Cockpit Light Assembly.

Compliance required not later than November 1, 1951.

To eliminate an electrical fire hazard existing in the pilot's compartment, the following rework must be accomplished:

1. Rework the C–4 cockpit light rheostat assembly in accordance with Figure 2. Fabricate insulator strip per Figure 2(a), and install as shown in Figure 2(b).

(U.S.A.F.T.O. No. 03–5G–12, dated September 8, 1950, covers this same subject.)

2. Revise the wiring to the C–4 lamp assembly as shown in Figure 3.

(Page 410D, Figure 301B of AN 01–25L–2 covers this same subject.)

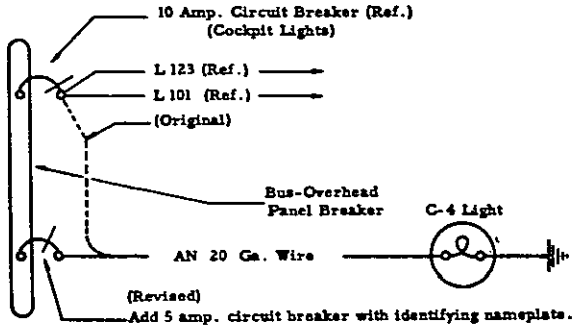

FIGURE 3

51–29–2 Curtiss-Wright Applies to All Model C–46 Series Aircraft.

Compliance required by February 1, 1952, and each 500 hours thereafter.

Inspect the main landing gear side brace attachment fittings, P/N 20–310–1033 L and R, for cracks particularly from the edge of the forging to the lower inboard attaching bolt hole. If defects are found, the parts should be replaced by undamaged parts.

In view of unavailability of parts and controlled inspection procedures under which satisfactory operation has existed, it will be considered satisfactory to operate the aircraft with a cracked fitting under the following procedure until further notice. Inspect at periodic intervals not to exceed 150 hours with approximately an 8-power magnifying glass or dye penetrant or any equivalent method. If cracks extend beyond bolt hole, either through or around the hole, the fitting must be replaced.

52–10–1 Curtiss-Wright Applies to All Model C–46 Aircraft.

Compliance required as soon as possible, but not later than August 1, 1952.

To provide circuit protection for the leads to both ammeters in the electric power system, the following shall be accomplished:

In those aircraft having the ammeter shunts in the positive generator leads, install a circuit breaker or fuse in each ammeter lead as close as practicable to the shunt.

52–12–2 Curtiss-Wright Applies to All Model C–46 Series Aircraft Operated Under CAR Part 42.

Compliance required as indicated.

In accordance with CAR 42.11 and to comply with air carrier standards, the main passenger cabin door locking means on all C–46 aircraft used for air carrier passenger operation must be equipped with both internal and external handles so that the door can be opened from either inside or outside in case of emergency. Aircraft not so equipped must be modified to comply by September 1, 1952.

52–17–2 Curtiss-Wright Applies to All Model C–46 Series Aircraft.

Compliance required as noted.

As a result of a number of failures the following precautionary measures must be taken:

1. The original compliance date set was not later than December 1, 1952, and at each No. 3 inspection thereafter, however, in order to convert the inspection interval to time in service, the following inspection shall be accomplished within 400 hours' time in service after the effective date of this amendment. Subsequent compliance required at each 400 hours' time in service after initial compliance. (Effective October 23, 1961.)

Upon request of the operator, an FAA maintenance inspector, subject to prior approval of the Chief, Engineering and Manufacturing Branch, FAA Southwest Region, may adjust the repetitive inspection intervals specified in this AD to permit compliance at an established inspection period of the operator if the request contains substantiating data to justify the increase for such operator. (Effective November 23, 1961.)

Inspect the tail wheel shimmy damper support, P/N 20–360–3108–4, for cracks or damage which might lead to subsequent failure. Particular attention should be paid to the radius formed by the intersection of the vertical and lower horizontal surface on the forward side of the part. A general inspection of the shimmy damper assembly should be made and it should be determined that it is properly adjusted. All cracked or damaged parts must be replaced.

The following method of adjustment of the shimmy damper as outlined in Air Force Technical Order AN 01–25LA–2, section IV, paragraph 8 (f) is quoted below for your convenience:

(*a*) Position the shimmy damper on the mounting bracket and attach the two ⅜-inch bolts, nuts, and washers, using a 9/16-inch open-end wrench in conjunction with a 9/16-inch socket and a ratchet.

(*b*) Before installing the link assembly to the shimmy damper arm, the arm must be positioned to allow for maximum travel of the unit in actual operation. This is accomplished by slowly actuating the arm toward the rear of the airplane until the movement stops. From this point reverse the action until the arm has made an arc of 67°. It is now in a neutral position and will assure correct operation when completely installed.

(*c*) With the arm in neutral and making sure not to move it from this position, attach the link assembly to it with the 5/16-inch bolt, nut, washer and cotter pin using a ½-inch open-end wrench, a ½-inch socket, and a ratchet.

(*d*) Make sure that the tail wheel is locked in position. The pin on the centering disc will then be properly set for attaching the eyebolt of the link assembly. If the eyebolt hole does not match with the pin on the centering disc when the tail wheel is locked and the actuating

arm is in neutral, adjustment must be made by loosening the locknut on the eyebolt and turning the eyebolt until the proper length is obtained. Be sure to tighten the locknut again.

(*e*) Secure the link assembly to the centering disc by installing the 1⅛-inch castellated nut and washer drawing up the nut with a crescent wrench. Insert a cotter pin on this nut.

2. Compliance required as noted.

Tail wheel locks for the subject model airplane have been manufactured which do not comply with the material specifications and in some cases physical dimensions of the approved drawings. The approved tail wheel lock P/N 20–360–1033, is a forged steel part of 8740 or N–S–16 material heat treated to 150,000 pounds per square inch, with a Rockwell harness of C–33 to C–38; however, a cast steel lock complying with the physical dimensions, heat treat and hardness of the approved drawing will also be considered acceptable.

The original compliance date for the following inspection was March 1, 1953; however, in view of a recent accident involving the installation of an unapproved tail wheel lock, it must be ascertained prior to February 15, 1956, that all tail wheel locks meet the stated specifications of an acceptable part. Any tail wheel locks which do not comply with the approved drawing, No. 20–360–1033, in regard to material, heat treat or physical dimensions as mentioned above, must be replaced with an approved part.

It should be noted that some unsatisfactory parts in circulation bear the correct part number, therefore this fact cannot be considered a satisfactory means of determining that an approved part is installed in the airplane.

52–18–1 Curtiss-Wright Applies to All Model C–46 Aircraft Equipped With Curtiss Drawing P/N S20–480–1101–2 Carburetor Adapter Gasket.

Compliance required not later than December 1, 1952.

Several instances of splitting and tearing of the neoprene carburetor adapter gasket, P/N S20–480–1101–2, permitting portions of gasket material to block the carburetor air passage has resulted in abrupt engine cutout. To eliminate the occurrence of this hazardous condition, either of the following changes or an approved equivalent shall be accomplished:

(*a*) Install new gasket and clamping assembly per USAF T.O. 01–25LA–79.

(*b*) Install carburetor adapter flange, Slick Airways P/N 00391–2.

As a precautionary measure, the subject gaskets shall be inspected for signs of looseness and splitting during each periodic inspection until accomplishment of the above.

52–19–1 Curtiss-Wright Applies to All Models of C–46 Series Airplanes Used in Passenger Operation Under the Provisions of Parts 41, 42, and 61 of the Civil Air Regulations as Specified in 41.20(f), 61.31(b), and Amendment 42–2 Dated November 1, 1946.

Item (5) of this Directive must be accomplished by November 1, 1952. The other items should be accomplished as soon as possible but not later than April 1, 1953.

(This note pertains only to the powerplant fire protection aspects of the above Regulations. AD's 49–18–1 and 49–25–1 cover the fire prevention for the cabin heater installation, and for the baggage and cargo compartments of the airplane respectively.)

Recent experience with the C–46 aircraft in passenger operation has brought to light several instances in which the adequacy of the powerplant fire protection installation provided is questionable. This Directive, which cancels and supersedes AD 49–19–1, therefore is intended to correct those installations wherein such inadequacies may exist.

(1) Shutoff Valves. Install fluid shutoff valves, which may be opened and closed in flight, aft of the firewall in all fuel, oil, and hydraulic lines. USAF Technical Order 01–25LA–190 covers this same subject. If propeller or carburetor anti-icing systems are employed and use alcohol or other flammable fluids as the anti-icing medium, the systems described in USAF T.O. AN 01–25LA–2, pages 458–464, are satisfactory except that shutoff valves or a selector valve which can be opened and closed in flight must be provided aft of the firewall, to shut off the flow to either engine. The system should be such as to shut off the pump automatically, or otherwise guard against hazardous pressures, when the flow to

both nacelles is stopped. (No shutoff valve will be required for the feathering pump oil lines, see section (3) below.)

(2) Engine Firewalls. Engine firewalls must be rendered fireproof by adequately sealing all openings such as the filtered air duct opening, the oil cooler control rod and filtered air control rod openings, other powerplant control openings, holes through the firewall for electric conduits, and any other firewall openings.

(3) Propeller Feathering Pump Installation. The portion of the propeller feathering oil line forward of the firewall between the firewall and the pump shall be of steel or other fireproof material. The line between the pump and governor shall be of fire resistant material with coupled hose assemblies used in any flexible connections. Electrical conduit for the pump motor and other electrical components forward of the firewall which are essential for propeller feathering shall be fire resistant or protected in a manner to render them fire resistant. The feathering pump can be considered an adequate means of shutting off the flow of oil in the feathering line.

(4) Fire Extinguisher System.

(*a*) CO_2 Quantity and Rate. The fire extinguisher system must be improved to provide at least 35# CO_2 per shot which must be discharged into the nacelle at a rate of not less than 17½#/sec (the rate of discharge will be affected by the number of bottles, the discharge valve sizes, the line sizes, and the nozzle area). The portion of the two-shot fire extinguisher system which is described in USAF Technical Order 01–25LA–205 is satisfactory. (Note: Civil Aeronautics Board Draft Release No. 52–15, proposes to require a two-shot fire extinguisher system in these airplanes in the near future. Operators, therefore, may consider it more practical to accomplish both changes at the same time.

(*b*) Distribution System. The piping and nozzle arrangements shall be such as to spray the bulk of the discharge in the power section with a smaller amount (approximately 7 percent) being sprayed over the oil cooler. In this regard, it will be acceptable, if desired, to split the power section portion of the discharge so as to spray approximately one-third of it from 5 nozzles located around the upper half of the engine mounting ring.

(*c*) Nozzle Location and Spray Pattern. The location of the nozzles and pattern of their spray are important for effective fire extinguishing and shall be substantially as follows:

1. For the power section, a nozzle shall be located at the rear and the base of each cylinder, discharging the CO_2 in a fan spray radially away from the crankcase. The provisions of USAF Technical Order 01–25LA–162 pertaining to replacement of engine cylinder fire extinguisher nozzle brackets must be accomplished.

2. For the oil cooler, a nozzle or nozzles shall be located above the forward end of the cooler directing fan sprays down and forward on each side of the cooler and duct.

3. The five nozzles located around the upper half of the mounting ring, if used, shall be such as to direct a fan spray radially outward as well as a fan spray radially inward over the accessories.

(5) Fire Detectors. The Fenwal continuous type fire detectors, which were originally provided must be removed and replaced with unit or continuous type fire detectors conforming with FAA Technical Standard Order, TSO–C11 or TSO–C11a. If unit type detectors are used, they shall be spaced as specified below. Continuous type detectors, if used, shall be so installed as to provide equivalent coverage.

(*a*) Engine Nacelles. Fire detectors, spaced not over 7 inches apart, shall be installed on the lower half of the forward side of the firewall at its outer periphery, and along the horizontal diameter.

(*b*) Engine Mount Ring and Oil Cooler Supports. Additional fire detectors, spaced not over 18 inches apart, shall be provided for the upper two-thirds of the engine mount ring. Also, a fire detector shall be installed on each oil cooler support approximately 2 to 3 inches above the oil cooler.

(*c*) Warning Light Covers. Fire-warning-light covers or shutters which are capable of dimming or shutting off the light entirely, must be removed.

(6) Engine Compartment Lines. The following lines carrying inflammable fluids or vapors in the engine compartment shall be fire resistant and items (*a*) through (*g*) inclusive

shall also have fireproof firewall fittings. Flexible connections in lines attached to the engine or subject to relative motion or pressure shall employ fire resistant coupled hose assemblies: (*a*) carburetor bleed back lines, (*b*) cabin heater fuel lines, (*c*) oil dilution lines, (*d*) fuel pressure transmitter lines, (*e*) oil pressure transmitter lines, (*f*) manifold pressure lines, (*g*) all other hydraulic oil lines, (*h*) all engine fuel lines, (*i*) engine primer lines, (*j*) engine breather lines, (*k*) engine supercharger drain lines, (*l*) oil separator return lines, (*m*) vacuum system pressure lines, (*n*) all main oil lines, (*o*) engine oil cooler lines, (*p*) hydraulic pump drain lines, (*q*) exhaust collector drain lines, (*r*) oil tank vent lines, (*s*) fuel pump drain lines.

The fire extinguisher distribution tubing and fittings ahead of the firewall must be of steel or other fireproof material. Flexible connections in the distribution tubing ahead of the firewall must be at least of fire resistant construction, and shall use coupled hose assemblies rather than hose clamp connections.

(7) Airplane Flight Manual. Appropriate changes to the airplane flight manual shall be prepared to cover emergency procedures associated with the above changes.

(8) More detailed information on methods of complying with this Directive is being furnished to CAA Agents.

53–10–1 Curtiss-Wright Applies to All C–46 Series Aircraft.

To be accomplished not later than November 1, 1953.

To guard against the possibility of excessive air temperatures and associated fire hazards in the vacuum system discharge line, one of the following modifications must be accomplished:

1. Install a fusible plug in the side of the vacuum pump discharge port at right angles to the axis of the discharge port boss. Some pumps incorporate a plugged hole in the discharge port which may be enlarged to a ⅜-inch pipe tapped hole to accommodate the fusible plug. This plug should employ an AN 840–8D fitting with a binary eutectic mixture of 67.8 percent tin and 32.2 percent cadmium, which has a melting point of 351° F. A drawing describing the design of such a plug is shown in Figure Douglas 2. The ⅜-inch fusible plug fitting is intended for pumps such as the Model 3P–211. Brass fittings of the same design as the above dural fittings are also acceptable. Incorporation of an overboard drain line clamped to the fusible plug is recommended, but is not mandatory. On installations which do not use an overboard discharge line the possiblity exists that the plug may damage other nacelle components if it can hit them upon being blown out of the adapter at high velocity. Therefore, if no overboard discharge line is provided, the installation must be made in such a manner that the plug will not be directed toward any vulnerable components when it is blown from the adapter.

Also, incorporation of steel lines with fire resistant hoses and utilizing hose liners and clamps in the vacuum discharge line is recommended if cracking and drying out of the flexible hose assemblies is experienced.

In lieu of this fusible plug installation:

2. An oil separator equivalent in principle to the Genisco No. 40081 incorporating a pressure relief valve which can be disassembled for cleaning must be provided. (Genisco Co. is located at 2233 Federal Ave., Los Angeles 64, Calif.)

54–5–1 Curtiss-Wright Applies to All C–46 Series Aircraft Equipped With Landing Gear Retraction Cylinder Heads, Curtiss-Wright P/N S20–313–3044.

Compliance required as soon as practicable but not later than July 15, 1954.

As a result of several failures of the landing gear retraction cylinder head emanating from fatigue cracks occurring in the radius of the O ring groove, it has been found necessary to inspect and rework the landing gear retraction cylinder head to provide a more serviceable part.

Remove the landing gear retraction cylinder head and inspect the upper and lower radii of the O ring groove for cracks by means of a dye penetrant. If cracks are found the part should be replaced. In the event no cracks are present the upper and lower radii of the O ring groove should be increased to 0.040 inch as shown in Figure 4 and again inspected by means of a dye penetrant. If no cracks are found after this

inspection, the part may be returned to service; however, if cracks are evident, the part should be replaced.

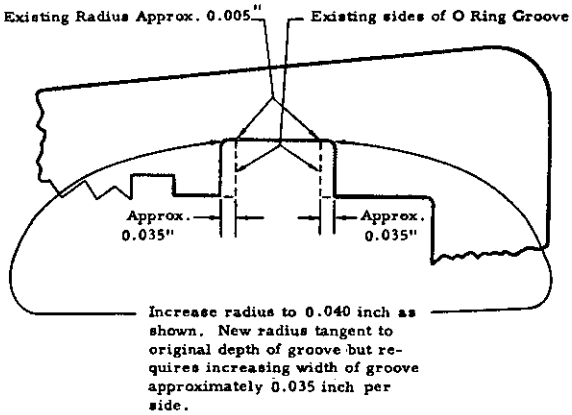

FIGURE 4

NOTE: Smooth machine finish (RMS-32 or better) with no tool marks or discontinuities. No change in size of O ring necessary.

54-14-1 Curtiss-Wright Applies to All Model C-46 Series Aircraft.

Compliance required as indicated.

A. Inspection.

1. Carefully inspect the outboard horizontal stabilizer rib, which supports the outboard elevator hinge, left and right, P/N 20-110-5014-2 and angles, P/N 20-110-5014-4 for cracks in the area from the rib end to a point at least 6 inches forward of the trailing edge of the stabilizer.

(*a*) On aircraft which do not have the modification described in paragraphs B1 and B2 below, this inspection is required every 100 hours.

(*b*) On aircraft which do have the modification described in paragraphs B1 and B2 below, this inspection is required every 800 hours.

(*c*) Deleted, March 28, 1955.

B. Replacement.

1. If cracks are found in the angles, P/N 20-110-5014-4, remove and replace with a similar angle fabricated from 0.040 24ST or 0.040 24SO aluminum alloy sheet. Specification No. AN A-13, condition A, heat treat in accordance with Specification AN 01-1A-1.

2. If cracks are found in the rib, P/N 20-110-5014-2, reinforce each rib as follows:

(*a*) Fabricate (per airplane) four angles, P/N 20-110-5014-1201 from 0.051 24STAL sheet, 15 inches long with 0.62 x 0.71 inch leg, and install at top and bottom on outboard side of rib and extending forward from the forward edge of hinge block assembly, P/N 20-110-5112-3 or 20-110-5070-502. 24ST aluminum alloy extrusion, Alcoa Die No. 12883, may be used as an alternate material if desired. Pick up existing rivets in the rib and skin.

(*b*) Fabricate (per airplane) four angles, P/N 20-110-5014-1202 from 0.051 24STAL sheet, 8.80 inches long with 0.62 x 0.71 inch legs and install angles on inboard side of rib at top and bottom, picking up the six bolts in the hinge block assembly P/N 20-110-5112-3 or 20-110-5020-502, and extending forward 8.80 inches from the end of the rib. 24ST aluminum alloy extrusion Alcoa Die No. 12883 may be used as an alternate material if desired. In addition to picking up the existing rivets, add three additional rivets at top and bottom between the existing rivets through the web of the rib assembly, and add four rivets, both top and bottom through the flange of the rib and leg of the angle.

(c) To assemble reinforcement angles called for in parts (*a*) and (*b*), the following modifications to the existing structure are necessary:

(1) Cut clip, P/N 20-110-5033-1 to clear angles—1201 and install.

(2) Cut angle P/N 20-110-5014-5 to clear angles—1202 and install.

(3) Cut skin, P/N 20-110-5001-66, to clear angles—1202 and replace rivets.

(Army Technical Order 01-25L-103 or Curtiss-Wright Service Information Letters: SBS: ASF: asf-7195, dated October 26, 1946, and its enclosures, cover this same subject.)

This supersedes AD 47-51-1.

55-9-2 Curtiss-Wright Applies to All C-46 Series Aircraft.

Compliance required as indicated.

(1) For Models C-46A and C-46D.

At each 3,000 hours of operation inspect visually and at each major overhaul inspect by means of Zyglo or equivalent method control column base assemblies P/N 20-530-3076-5, arm assemblies P/N 20-530-1049-1 and -3, terminal assemblies P/N 20-530-1286-1 and -3,

and upper terminal assemblies P/N 20–530–1059. Also inspect for cracks around the rivets which retain the assemblies to the torque tube P/N 20–530–1163–2.

(2) For Models C–46E and C–46F.

Due to recent similar failures reported on these models, the assemblies corresponding to the above Model C–46A and C–46D assemblies must be similarly inspected.

All defective parts must be replaced.

This supersedes AD 51–14–2.

57–5–1 Curtiss-Wright Applies to All C–46 Series Aircraft.

Compliance required by August 1, 1957.

During emergency extension of the landing gear, hydraulic dump valves are actuated in the landing gear hydraulic system to vent fluid directly overboard in order to prevent trapped fluid from preventing the lowering of the landing gear.

On early model aircraft this fluid was vented overboard on the inboard side of the nacelles directly aft of the exhaust stack. This has resulted in fires in areas where no fire detection or protection is provided.

In order to prevent this occurrence, item (1), (2), or (3) should be accomplished.

(1) The vent line should be rerouted to vent from nacelle tail cone in accordance with Curtiss-Wright Service Bulletin C–46 1226 or Curtiss-Wright Drawing No. 20–575–3206.

(2) The vent line should be rerouted to return to the main system as outlined in change A of T.O. 01–25LA–209.

(3) The vent line should be rerouted to an approved equivalent of item (1) or (2).

Either item (1) or (2) may have been accomplished on later model aircraft at the factory or by the military; however, the aircraft may have been further modified and should be inspected for compliance.

57–11–1 Curtiss-Wright Applies to All C–46 Series Aircraft.

Compliance required as indicated.

Numerous instances have been found where unapproved nonconformity Elevator Spring Tab Cartridge Assemblies, Curtiss-Wright P/N 20–530–5710, or portions of this assembly, have been installed on C–46 aircraft. Use of these unapproved assemblies or parts of assemblies can prove to be hazardous.

Accordingly, an inspection should be made of these assemblies for conformity to approved data. This inspection should be accomplished not later than August 31, 1957.

It will be necessary to remove and disassemble the unit to make the inspection. Listed below are the drawing numbers of the assembly and its component parts, with a brief discussion of each. Copies of these drawings are available upon payment of reproduction costs from the Chief, Aircraft Engineering Division, Civil Aeronautics Administration, P.O. Box 1689, Fort Worth 1, Texas. It is not necessary to obtain these drawings for the required inspection but in cases of doubt they are available.

20–530–5710—Cartridge Assembly Elevator Spring Tab.

20–530–5716—Barrel—Elevator Spring Tab Cartridge Material—8630 Normalized Seamless Steel Tubing I. D.—$1.125 \pm \frac{.001}{.000}$ lapped or honed, unplated. O.D. 1.312 threaded both ends $1\frac{5}{16}$—18NEF–3. Between threaded ends part may be machined to 1.242 diameter or stock size, machined to clean up. Outside cad-plated.

20–530–5712—Cap—Elevator Spring Tab Cartridge Material—1.500 hex. 23ST.

20–530–5711—Cap—Elevator Spring Tab Cartridge Material—17ST forging (Curtiss-Wright). These caps are also approved to be machined from 24ST bar stock. It has also been noted that these caps have been made from cast aluminum which is unapproved. These unapproved parts can be identified by their rough appearance and will show a tensile strength of approximately 32,000 p.s.i. under a hardness test and should be destroyed.

20–530–5717—Spring—Elevator Spring Tab Cartridge. This is a single spring (Curtiss-Wright). Material—0.124 diameter, music wire (cad-plated). Tensile strength 260,000 p.s.i. O.D. 1.004 ± .03 free length 4.09 ± .08 inch. Spring rate 40 ± 2.4 pounds per inch.

There is also a satisfactory dual spring installation. Outer Spring—Same dimensions and material as Curtiss-Wright Spring except it has more coils and a spring rate of 35±2.4 pounds per inch. Inner Spring—.675 O.D. .076 diameter music wire. Free length 3.56± .08 inch. Spring rate 10.6 pounds per inch. Both inner and outer spring are cad-plated.

20–530–5743 — Shaft Assembly Elevator Spring Tab Cartridge. This assembly is made up of the following parts:

20–530–5714—Shaft—Elevator Spring Tab Cartridge. Stock material 0.625 diameter x 5.20 8630 steel. Tensile strength 65,000 p.s.i.

For use with the single spring the shaft is ground and polished to $.3101 \pm \frac{.0000}{.0005}$ diameter except for a .600 diameter collar, 0.150 wide, 2.863 inches from one end. The shaft has 5/16—24NF–3 threads .750 long at each end. With the exception of the threads the shaft is hard chrome plated with a finish diameter of $.3110 \pm \frac{.0009}{.0000}$. For use with the dual spring the 2.863 dimension is 2.782, the 0.150 dimension is .312 and the .600 dimension is .500, all other dimensions and finishes are the same.

20–530–5713 — Clevis — Elevator Spring Tab Cartridge. Material 24ST. The lugs have a thickness of $.100 \pm \frac{.000}{.010}$. The threaded portion is .500 O.D. This part is pinned to the 20–530–5714 shaft with a .125 or a .093 dia. x .75 in. 1020–1025 steel pin peened on both ends.

20–530–5715 — Plunger — Elevator Spring Tab Cartridge. Material S. B. 1100 x .870 manufactured by Chrysler Corp. Amplex Div. This material is known as Super-Oilite and is made of powdered iron and copper and has the appearance of iron. In no case should steel or any other solid material be used.

For use with the single spring the plunger has a single taper while for use with the double spring an additional shoulder is machined on the taper for the center spring.

The inspection should primarily cover the material, dimensions, and the required finishes listed. Care should be taken to inspect for rust, corrosion, or interference which may affect the operation of the cartridge. The springs should also be checked dimensionally and for proper spring rate. All assemblies or portions of assemblies which do not conform should be removed. Only approved parts obtained from a reputable source, with evidence of approval should be installed.

57–13–5 *See* Hamilton Standard Propellers.

57–15–2 Curtiss-Wright Applies to All Model C–46 Series Aircraft.

Compliance required as indicated.

Due to repeated service failures of H–3–38–M1 wheel assemblies (Hayes and/or Goodrich Model No. 1900M), the following action is required:

1. At each 100 to 125 hours, conduct a visual inspection of the demountable flange in the area of the lightening holes with the aid of a flashlight or equivalent. If cracks are detected, the flange must be either retired or reworked in accordance with paragraphs 3.5.2.2.1 and 3.5.2.2.2 of Goodrich Manual No. 14932.

2. Unless already inspected within the period specified herein, all H–3–38–M1 wheel assemblies (used or unused) must be disassembled and inspected prior to installation and thereafter at each 85th landing or regular periodic inspection period nearest to 330 hours, whichever occurs first.

(*a*) Visually inspect the lock ring groove area for corrosion. All corrosion in this area must be removed by hand working with No. 300 sandpaper or equivalent, remachining or grinding away of metal is not permitted. Corrosion in the lock ring groove area of the wheelbase can be removed only to a depth of 0.015 inch from the original surface of the groove. Should corrosion and pitting be in excess of this dimension, the wheelbase must be retired from service. The nominal lock ring groove diameter in the wheel is 17.250 inches. After corrosion cleanup this diameter should not be less than 17.220 inches. The O.D. of the wheelbase in the lock ring groove area and the bottom of the lock ring groove should be concentric within 0.015 inch. The lock ring groove should be retreated to prevent corrosion at every wheel disassembly per treatment specified in B. F. Goodrich Service Letter No. 1022 or equivalent.

NOTE: The original rim lock ring, P/N G85–30, was of tubular steel construction and cadmium plated for rust prevention. This lock ring causes an electrolitic reaction between the magnesium and steel when exposed to moisture and is therefore conducive to corrosion. These lock rings have been superseded by a new solid aluminum type of the same part number.

(*b*) Inspect the following critical areas for cracks using Zyglo, dye penetrant or equivalent method. All paint must be re-

moved using a stripping agent of the waxless solvent type that does not react chemically with magnesium.

(1) Brake drum mounting register, (2) tire bead radius of the fixed flange, (3) tire bead seat radius of the demountable flange, (4) radius of the demountable flange step, (5) flange retaining ring groove in the wheel, and (6) rim lock ring.

All parts with cracks in any of the critical areas must be retired from service. Rim lock rings P/N G85-30 with cracks must be replaced with the solid aluminum part or equivalent.

3. The following should be accomplished at the first disassembly of wheel unless already accomplished:

(*a*) The lock ring groove area should be steam cleaned with high pressure steam to insure that this area had not been previously reworked and refinished by filling corroded areas with metal putty. Corroded areas may only be reworked in accordance with item 2 (*a*) above.

(*b*) Rework all demountable flanges by removing the sharp edges of the lightening holes in accordance with Goodrich Service Letter No. 1022.

This supersedes AD 56-17-1.

58-17-2 Curtiss-Wright Applies to All C-46 Series Aircraft Including the Models C-46R and C-46/CW20-T Aircraft.

Compliance required as noted.

Due to recurrent fatigue cracking on the horizontal tail surfaces, the following inspections must be accomplished:

1. Conduct a daily visual external inspection of the horizontal tail surfaces for cracks with especial reference to cracks developing in the skin and ribs in the area of the elevator balance weights and the elevator hinge cutouts.

2. A detailed visual inspection of the horizontal tail surfaces must be conducted at intervals not to exceed 100 hours' time in service. (Effective July 11, 1961.) Particular attention should be paid to cracks developing in the area of the balance weights on the elevator, elevator nose ribs, elevator main spar, and elevator and stabilizer hinge ribs.

3. Any cracks found must be repaired in accordance with the structural repair manual or other approved repair method prior to the next flight. Stop-drilling of cracks is not considered a repair but may form part of a repair.

To facilitate inspection, the horizontal stabilizer may be modified in accordance with L. B. Smith Aircraft Corporation Drawing No. 5.040.02, or approved equivalent.

To provide access to the elevator interiors for visual inspection, access holes may be added in the elevator skin as shown on Riddle Airlines Incorporated Service Bulletin No. RSB-C-46-8.

58-17-3 Curtiss-Wright and Martin Applies to C-46 Series (Including C-46/CW20-T) and 202, 202A, 404 Aircraft Having Propeller Hydraulic Feathering Lines Routed Over or Attached to Engine Cylinder Assemblies.

Compliance recommended at the next engine overhaul but required by June 1, 1959.

Several cases of engine cylinder failures have occurred in which it was subsequently impossible to feather the propeller. In these cases, the feathering line which was routed over a front row cylinder was severed by a dislodged cylinder, thus preventing feathering and causing an additional fire hazard from oil being pumped over the engine. The record of cylinder failures from studs loosening or breaking indicates that the front row cylinders are mainly involved.

To prevent loss of feathering control from such failures, either of the following is required:

1. The propeller feathering line must be routed between cylinders. It must be supported in a manner avoiding attachment to a cylinder, and the line located at least three to four inches from the cylinder flanges.

2. The propeller feathering line must be routed between cylinders on the front row of cylinders in the manner described above. However, it will be acceptable for the line to be routed over a rear row cylinder provided it can be determined that sufficient flexibility is provided to prevent feathering line damage in the event of cylinder failure.

58-20-1 Curtiss-Wright Applies to All C-46 Series Aircraft P/N 20-360-1058-2 (Tail Wheel Retract Yoke).

Compliance required at next regular inspection, but not later than December 1, 1958.

Several P/N 20-360-1058-2 tail wheel retract yokes have been found cracked or broken. Many of these parts have had a radius at the base of the yoke of less than the required 0.120 inch.

As a result of these failures, the subject parts must be inspected for the proper radius and magnetic particle, or equivalent inspection for cracks at the base of the yoke.

Parts which have a radius at the base of the yoke of less than 0.110 inch or in which cracks are found, are considered unairworthy and must be replaced.

60-3-2 Curtiss-Wright Amdt. 99 Part 507 Federal Register February 2, 1960. Applies to All C-46 Series Aircraft Including the C-46R and C-46/CW20-T Aircraft.

To eliminate the possibility of a fire in the cargo and baggage compartments being caused by unshielded sources of heat, compliance with CAR 4b.382(d)[1] must be accomplished by March 1, 1960.

60-23-2 Curtiss-Wright Amdt. 217 Part 507 Federal Register November 4, 1960. Applies to All C-46 Series Aircraft.

Compliance required as indicated.

As a result of recent inspections of C-46 aircraft, unapproved inspection openings approximately 3 inches by 5 inches have been found in the wing rear spar web at the inboard flap actuator.

(a) Prior to further flight visually inspect rear face of rear spar web at flap actuators by extending flap.

(b) Cargo aircraft found to have unapproved openings in the rear spar web must have an approved repair accomplished within not more than 25 flight hours. Pending accomplishment of an approved repair the inspection in paragraph (a) must be accomplished after each landing and further flight not authorized if cracks or other damage are found.

(c) Passenger aircraft found to have unapproved openings in the rear spar web must have an approved repair accomplished before next flight with passengers. Special flight permits may be obtained for the purpose of permitting aircraft to be ferried to a base where repairs can be made.

This airworthiness directive sent by telegram to all known air carrier operators of Curtiss-Wright C-46 Series aircraft on October 21, 1960. Effective on date of publication in the Federal Register to all persons not receiving telegram of October 21, 1960.

60-25-1 Curtiss-Wright Amdt. 230 Part 507 Federal Register December 6, 1960. Applies to All C-46A, D. E. F. and R; C-46/CW 20T; Super C-46/CW 20T; Super 46; And Super 46C Aircraft.

Compliance required as indicated.

Due to fatigue failures found in the outer wing panel attachment bolts, the following must be accomplished:

(a) On aircraft having outer wing panel attachment bolts with 10,000 or more hours' time in service that have accumulated more than 5,000 hours' flight time since the last inspection of such bolts, the outer wing panel attachment bolts must be inspected for cracks, elongation and corrosion prior to the next flight except aircraft may be ferried without a special flight permit one time only, with occupancy limited to the required flight crew, to a base where personnel and facilities for required work are available.

(b) On aircraft having outer wing panel attachment bolts with 10,000 or more hours' time in service that have accumulated less than 5,000 hours' flight time since the last inspection of such bolts, the outer wing panel attachment bolts must be reinspected for cracks, elongation and corrosion within the next 25 hours of flight time.

(c) Outer wing panel attachment bolts found, during the inspections under (a) or (b), to be cracked, elongated or corroded must be replaced with new bolts prior to further flight.

(d) Outer wing panel attachment bolts which are not found, during the inspections under (a) or (b), to have cracks, elongation

[1] Section 4b.382(d) of the Civil Air Regulations provides as follows:
"Sources of heat within the compartment shall be shielded and insulated to prevent igniting the cargo." In a note to that section it further provides that "Sources of heat likely to ignite cargo include light bulbs, combustion heaters, heater ducts, electrical appliances, etc."

or corrosion, may be reused for a total time not to exceed 500 hours' flight time after such inspection at which time all such bolts must be replaced with new bolts.

(e) After compliance with the requirements of paragraph (c) and/or (d) all outer wing panel attachment bolts must be replaced at intervals of 10,000 hours' time in service.

(f) New bolts, P/N's SS 157-7-21 or MS 20007-21 or NAS 147-35 (31 per wing) and P/N's SS 157-6-20 or MS 20006-20 or NAS 146-33 (88 per wing) or FAA approved equivalents are acceptable replacements.

This airworthiness directive sent by telegram to all known operators of Curtiss-Wright C-46 Series aircraft by individual telegrams dated October 25, 1960, and amendment telegram dated October 26, 1960. Effective on date of publication in the Federal Register to all persons not receiving telegrams of October 25 and 26, 1960.

61-22-5 Curtiss-Wright Amdt. 349 Part 507 Federal Register October 19, 1961. Applies to All C-46 Series Aircraft.

Compliance required as indicated.

As a result of failure of the main landing gear drag struts, due to fatigue caused by an improper weld joining the strut tube and the lower end fitting, the following is required, unless already accomplished:

Within the next 200 hours' time in service after effective date of this AD, inspect the weld in the main landing gear drag strut that joins the lower end fittings, P/N 20-310-1018-2, to the drag strut tubes, P/N 20-310-1017-7 and -8, for the presence of a space or notch formed by the filleted shoulder on the end fitting and the weld. If the weld bead does not extend from the strut tube to the outer edge on the shoulder of the fitting, completely filling the area between the tube and the shoulder, this area must be inspected for cracks using dye penetrant, magnetic particle or an equivalent inspection method. If cracks are found, the drag strut must be replaced prior to further flight.

This directive effective November 20, 1961.

62-10-2 Curtiss-Wright Amdt. 427 Part 507 Federal Register April 20, 1962. Applies to All C-46 Series Aircraft Except The Following: Aircraft Listed On Aircraft Specification 2A5, C-46R Aircraft Listed On Aircraft Specification 3A2, Aircraft Certificated Under STC SA4-33, Aircraft Certificated Under STC SA2-422, and Any Other Aircraft Meeting All Of The Fire Protection Requirements Of SR-406C.

Compliance required within the next 500 hours of time in service after May 22, 1962. (Effective June 30, 1962.)

To correct the fire protection deficiencies on the C-46 Series aircraft, the following is required:

(a) To prevent fire originating in the engine sections from burning into the wheel well area, accomplish the following or FAA approved equivalent unless already accomplished:

(1) Cover the landing gear doors with an 0.015 stainless steel sheet from the forward edge of the doors aft to approximately Station 145 (approximately 55 inches).

(2) Cover the fixed portion of the lower wheel well skin fore and aft between the firewall and the forward edge of the landing gear doors, peripherally between the wheel well door hinge lines, with an 0.015 stainless steel sheet.

(3) Cover the sides of the nacelle in the area of the exhaust impingement with an 0.015 stainless steel rectangular sheet approximately 20 inches by 40 inches with the lower, long side boundary along the landing gear door hinge line and the forward, short side even with the forward edge of the existing nacelle skin at the firewall.

Attach all of the above steel sheets with monel or steel fasteners.

(b) In order to generally improve the powerplant fire protection in C-46 Series aircraft, accomplish the following or FAA approved equivalent unless already accomplished.

(1) *Shut-off valves.* Install fluid shut-off valves which may be opened and closed in flight aft of the firewall in all fuel, oil, and hydraulic lines. USAF Technical Order 01-25LA-190 covers this same subject. If propeller or carburetor anti-icing systems are employed and use alcohol or other flammable fluids as the anti-icing medium, the systems described in USAF T.O. AN 01-25LA-2, pages 458-464, are satisfactory except that shut-off valves or a selector valve which can be opened and closed in flight must be provided aft of the firewall to shut off the flow to either

engine. The system shall be such as to shut off the pump automatically, or otherwise guard against hazardous pressures, when the flow to both nacelles is stopped. (No shut-off valve will be required for the feathering pump oil lines—see (b)(3)).

(2) *Engine firewalls.* Engine firewalls must be rendered fireproof by adequately sealing all openings such as the filtered air duct opening, the oil cooler control rod and filtered air control rod openings, other power plant control openings, holes through the firewall for electric conduits, and any other firewall openings. All attachments through the firewall utilized in rendering the firewall fireproof shall be monel or steel attachments.

(3) *Propeller feathering pump installation.* The portion of the propeller feathering oil line forward of the firewall between the firewall and the pump shall be of steel or other fireproof material. The line between the pump and governor shall be of fire resistant material with coupled hose assemblies, meeting the requirements of TSO–C42, used in any flexible connections. Electrical conduit for the pump motor and other electrical components forward of the firewall which are essential for propeller feathering shall be fire resistant or protected in a manner to render them fire resistant. Wire conforming to MIL–C–25038 is considered fire resistant. The feathering pump can be considered an adequate means of shutting off the flow of oil in the feathering line.

(4) *Fire detectors.* The Fenwal continuous type fire detectors (non-repeatable, fusible-alloy, obsoleted in 1950), which were originally provided, must be removed and replaced with unit or continuous type fire detectors conforming with FAA Technical Standard Order, TSO–C11 or FAA approved equivalent. (Effective August 7, 1962.) Such detectors shall also meet the requirements specified in subparagraphs (i) through (vi). If unit type detectors are used, they shall be spaced as specified in subparagraphs (i) and (ii) and continuous type detectors, if used, shall be so installed as to provide the same coverage. (Effective June 30, 1962.)

(i) Engine nacelles: Fire detectors, spaced not over 7 inches apart, shall be installed on the lower half of the forward side of the firewall at its outer periphery, and along the horizontal diameter. Also, fire detectors shall be located so as to be in the air egress pattern for any other openings in the engine or accessory cowling.

(ii) Engine mount ring and oil cooler supports: Additional fire detectors, spaced not over 18 inches apart, shall be provided for the upper two-thirds of the engine mount ring. Also, a fire detector shall be installed on each oil cooler support approximately 2 or 3 inches above the oil cooler.

(iii) Warning light covers: Fire-warning-light covers or shutters, which are capable of dimming or shutting off the light entirely, must be removed.

(iv) Means shall be provided to permit the crew to check in flight the functioning of the electric circuit associated with the fire detection and fire warning systems.

(v) Wiring and other components of the fire detection system which are located in the engine and accessory sections shall be of fire resistant construction. (See (b)(2) for firewall attachments.)

(vi) Aural fire warning means, along with fire warning lights, shall be installed to indicate the presence of fire in either engine nacelle.

(5) *Engine compartment lines.* The following lines carrying inflammable fluids or vapors in the engine compartment shall be fire resistant, and items (a) through (g), inclusive, shall also have fireproof firewall fittings. Flexible connections in lines attached to the engine or subject to relative motion or pressure shall employ fire resistant coupled hose assemblies: (a) carburetors bled back lines, (b) cabin heater fuel lines, (c) oil dilution lines, (d) fuel pressure transmitter lines, (e) oil pressure transmitter lines, (f) manifold pressure lines, (g) all other hydraulic oil lines, (h) all engine fuel lines, (i) engine primer lines, (j) engine breather lines, (k) engine supercharger drain lines, (l) oil separator return lines, (m) vacuum system pressure lines, (n) all main oil lines, (o) engine oil cooler lines, (p) hydraulic pump drain lines, (q) exhaust collector drain lines, (r) oil tank vent lines, (s) fuel pump drain lines.

Flexible hose assemblies for those lines noted above shall conform to TSO–C53 Type "C". Metal tubing, hose, and clamp type plumbing

utilized in those lines noted above shall consist of steel tubing and fire resistant hose. Aeroquip 624 fire sleeve, or equivalent, may be utilized to render nonfire resistant hose (for the hose, steel tube, and clamp type plumbing) fire resistant. Aluminum firewall fittings, sizes 1-inch and larger, will be acceptable as fireproof fittings.

(6) *Airplane flight manual.* Appropriate changes to the airplane flight manual shall be prepared to cover emergency procedures associated with the above changes.

(c) Upon request of the operator, an FAA maintenance inspector, subject to prior approval of the Chief, Engineering and Manufacturing Branch, FAA Southern Region, may adjust the compliance times specified in this AD if the request contains substantiating data to justify the increase for such operator. Effective August 7, 1962.)

This directive effective May 22, 1962.

62–27–3 Curtiss-Wright Amdt. 525 Part 507 Federal Register December 28, 1962. Applies to All C–46 Series Aircraft Which Have Rudder Assemblies P/N 20–140–5110 Installed.

Compliance required as indicated.

A recent inflight failure of the rudder spring tab rod terminal resulted in the free flutter of the rudder spring tab which forced the rudder to oscillate. To preclude the failure of this rod terminal and the resulting loss of control of the aircraft, the following shall be accomplished:

(a)(1) Aircraft with less than 10,000 hours' time in service shall be inspected in accordance with (b) prior to the accumulation of 10,200 hours' time in service and thereafter every 400 hours' time in service.

(2) Aircraft with 10,000 or more hours' time in service shall be inspected in accordance with (b) within 200 hours' time in service after the effective date of this AD, unless already accomplished within the last 200 hours' time in service, and thereafter every 400 hours' time in service from the last inspection.

(b)(1) Remove the clevis, P/N 20–530–5133–2, and AN 316–5R nut from the rudder spring tab rod assembly, P/N 20–530–5134–1.

(2) Inspect for cracks in the shoulder and threaded shank of the rod terminal, P/N 20–530–5132–2, using a dye penetrant, magnetic particle, or an FAA approved equivalent inspection method in conjunction with at least a 5-power magnifying glass.

(3) Replace cracked rod terminals, P/N 20–530–5132–2, prior to further flight.

(c) Rod terminals, P/N 20–530–5132–2, or rod assembly, P/N 20–530–5134–1, having zero or a known time in service not exceeding 5,000 hours, may be installed in compliance with (b)(3). Such parts shall be inspected and replaced in accordance with the following:

(1) Parts having less than 4,800 hours' time in service shall be inspected in accordance with paragraphs (b)(1) and (2) prior to the accumulation of 5,000 hours and thereafter every 400 hours' time in service.

(2) Parts having 4,800 or more hours' time in service shall be inspected in accordance with paragraphs (b)(1) and (2) within the next 200 hours' time in service and thereafter every 400 hours' time in service.

(3) Cracked parts shall be replaced prior to further flight.

(d) The inspection required by paragraph (b) is no longer required when rod assembly, P/N 20530–5134–1, is replaced with a new Component Air, Inc., rod assembly, P/N CAI–46003–1, or with an FAA approved rod terminal and clevis, or a rod assembly incorporating a clevis with 3/8–24 UNF or 7/16–20 UNF threads.

(e) Upon request of the operator, an FAA maintenance inspector, subject to prior approval of the Chief, Engineering and Manufacturing Branch, FAA Southern Region, may adjust the repetitive inspection intervals specified in this AD to permit compliance at an established inspection period of the operator if the request contains substantiating data to justify the increase for such operator.

This directive effective January 29, 1963.