FEDERAL AVIATION AGENCY

FLIGHT STANDARDS SERVICE

[14 CFR Parts 4b, 40, 41, 42, 91 [New], 514]

[Notice 63-46; Docket No. 3008]

INSTALLATION OF COCKPIT VOICE RECORDERS IN LARGE AIRPLANES USED BY AN AIR CARRIER OR A COMMERCIAL OPERATOR

Notice of Proposed Rule Making

Notice is hereby given that there are under consideration proposals to amend (1) Parts 40, 41, and 42 of the Civil Air Regulations and Part 91 [New] of the Federal Aviation Regulations to require the installation of cockpit voice recorders in large airplanes used by air carrier or commercial operators; (2) Part 514 of the Regulations of the Administrator to establish standards for the approval of cockpit voice recorders; and (3) Part 4b of the Civil Air Regulations to prescribe standards governing cockpit voice recorder installations.

Interested persons are invited to participate in the making of the proposed rule by submitting such written data, views, or arguments as they may desire. Communications should identify the notice or docket number and be submitted in duplicate to the Federal Aviation Agency, Office of the General Counsel; Attention Rules Docket, 800 Independence Ave. SW., Washington, D.C. All communications received on or before February 28, 1964, will be considered by the Administrator before taking action on the proposed rule. The proposals contained in this notice may be changed in the light of comments received. All comments submitted will be available, both before and after the closing date for comments, in the Rules Docket for examination by interested persons.

In recent years there have been a number of accidents characterized by sudden extreme emergencies, so that the flight crew could not communicate with ground facilities. In those cases where the crew did not survive, information that they may have been able to give concerning the cause and nature of the emergency was lost.

The Civil Air Regulations currently require airborne flight recorders, in certain large airplanes used by air carrier and commercial operators, to record at least time, and the altitude, airspeed, vertical acceleration, and heading of the airplane. Although this information has been extremely helpful in estimating the airplane's flight path, and maneuvers, additional information to establish the cause of the emergency and the procedures used by the crew to cope with it could be obtained from a recording of the crews' conversation during the emergency.

The Agency conducted a feasibility study in 1960 and awarded contracts for the development of cockpit voice recorders in October 1961. This study indicated that with suitable microphone and filter equipment it was possible to obtain reasonably intelligible recordings of cockpit conversations from a continuously open cockpit-mounted area microphone under rather severe cockpit noise conditions. However, in the DC-3 airplane, which has an extremely high cockpit noise level, it was necessary to use headset boom-mounted microphones.

The Agency conducted a government-industry Airborne Recorder Symposium on March 19, 1963, at which cockpit voice recorder development was reviewed, and a preliminary draft of performance standards for such recorders was distributed. A number of constructive suggestions were received and included in the standards. Moreover, several manufacturers advised the Agency that they are prepared to manufacture recorders meeting such standards.

The Agency believes that cockpit voice recorders would be a valuable tool in the investigation of accidents and thereby lead to improvements in safety by providing firsthand information of the flight crews' observation and analysis of conditions aboard the airplane and the procedures employed by them. This information would, in turn, facilitate the development and establishment of appropriate corrective measures such as design changes in the airplane or revised operating procedures.

Since the need for such information may arise at any time, the installation of cockpit recorders should proceed as rapidly as possible. The Agency believes that the installation schedule proposed herein is practicable and will not seriously disrupt the operation of the affected airplanes. Amendments to the regulations to require the installation and use of cockpit voice recorders are therefore being proposed, as discussed in the following paragraphs.

1. It is proposed to amend Parts 40, 41, and 42 to require the installation of approved cockpit voice recorders on large airplanes used in air carrier and commercial operations by the following dates:

(a) On all turbine-powered airplanes by July 1, 1965;

(b) On all pressurized reciprocating four-engine airplanes by January 1, 1966; and

(c) On all other airplanes by July 1, 1966.

2. The proposed amendments to Parts 40, 41, and 42 also specify that the recorder must be installed in accordance with the pertinent installation requirements of Part 4b, as discussed hereinafter, and that it must be operated continuously from the beginning of the starting checklist through the final checklist of each flight. The operator would be required to retain the recording for at least 60 days in the event of any accident or occurrence that requires immediate notification to the Civil Aeronautics Board.

3. In order to cover crew training operations conducted by air carriers or commercial operators, an amendment to add a new § 91.36 to the general operating rules of Part 91 [New] is being proposed. This proposal is similar to the foregoing proposals for Parts 40, 41, and 42.

4. It is also proposed to amend Part 514 of the regulations of the Administrator Order as § 514.90 specifying standards for cockpit voice recorders. Among other things, the proposed standards require the ability to record simultaneously on four separate channels, but require only the last 30 minutes of operation to be retained on the recording medium so that it may be reused continuously. In addition to environmental and performance tests typical for airborne audio equipment, the proposed standards also specify special frequency response, sensitivity, and harmonic distortion characteristics for the cockpit-mounted area microphone and preamplifier equipment, to cope with cockpit noise. The standards also prescribe impact, fire protection, and water immersion tests to insure that the record will be usable after a crash.

5. Since the ability to record intelligible and useful information will depend

upon the manner in which the recorder is installed, a new § 4b.656 is proposed that contains requirements for cockpit voice recorder installations. This section would require the recorder to be installed in such a manner that it will record all voice communications of the flight crewmembers while on the flight deck or while using the airplane's interphone or loud speaker systems. It would also require the recorder to be installed in such a manner that it will record voice communications transmitted or received by radio, and any voice or audio signals identifying navigation or approach aids that are introduced into a headset or speaker in the airplane.

In this respect, the proposal would require the installation of one or more cockpit-mounted area microphones arranged to pick up continuously all voice communications by flight crewmembers when at their assigned stations on the flight deck. It would also require the recorder to be installed in such a manner that the intelligibility of the recorded communications will be as high as practicable when recorded under flight cockpit noise conditions and played back. For accident investigation purposes, 100 percent readability of all flight crew conversations would, of course, be highly desirable. However, studies made by the Agency show that this goal is not attainable in the present state of the art, and that the intelligibility which can be achieved depends upon the cockpit noise environment of the particular airplane type. Therefore, the proposed rule is intended to insure that current knowledge and techniques for improving intelligibility will be applied in making recorder installations by using optimum microphone locations and filter characteristics. For airplanes, such as the DC-3, in which satisfactory intelligibility cannot be obtained with cockpit-mounted area microphones because of the high cockpit noise level, the proposed rule requires the use of headset boom-mounted microphones or equivalent. The Agency's studies have also shown a need for the development of a practical and objective method or means for measuring the intelligibility level of cockpit voice recordings. Proposals for studies to accomplish this objective are now being considered.

To minimize garbling of the record when several communications take place simultaneously, it is proposed that the installation be arranged to record on separate channels the communications spoken or received on microphones, headsets, or speakers located at the following stations: (1) First pilot's station; (2) second pilot's station; (3) third crewmember's station, if such is provided on the airplane; and (4) cockpit-mounted area microphone(s). The proposal also specifies that the recorder be connected to the most reliable electric power source. An aural or visual means would be required to enable checking the recorder for proper operation prior to flight. Finally, means would also be required to stop automatically any erasure feature in the event of a crash.

These proposals except the one pertaining to Part 91 [New] are subject to the FAA Recodification Program announced in Draft Release 61-25 (26 F.R. 10698). The final rule, if adopted, may be in the recodified form; however, the recodification itself will not alter the substantive contents proposed herein.

These amendments are proposed under the authority of sections 313(a), 601, 603, and 604 of the Federal Aviation Act of 1958 (49 U.S.C. 1354, 1421, 1423, 1424).

In consideration of the foregoing, it is proposed to amend Parts 4b, 40, 41, and 42 of the Civil Air Regulations, Part 91 [New] of the Federal Aviation Regulations, and Part 514 of the Regulations of the Administrator, as follows:

1. By amending Part 4b by adding a new § 4b.656 to read as follows:

§ 4b.656 Installation of cockpit voice recorders.

(a) If a cockpit voice recorder is required by the operating rules of this subchapter, it shall be of an approved type and shall be installed so that it will record all:

(1) Voice communications transmitted from or received in the airplane by radio;

(2) Voice communications of flight crewmembers on the flight deck;

(3) Voice communications of flight crewmembers using the airplane's interphone system;

(4) Voice communications of flight crewmembers using the airplane's loud speaker system; and

(5) Voice or audio signals identifying navigation or approach aids introduced into a headset or speaker in the airplane.

(b) The cockpit voice recorder shall be installed so that the portion of the communications or audio signals specified in paragraph (a) of this section obtained from each of the following sources is recorded on a separate channel:

(1) Microphones, headsets, or speakers used at the first pilot station.

(2) Microphones, headsets, or speakers used at the second pilot station.

(3) Microphones, headsets, or speakers used at a third flight crewmember's station (if such a station is provided in the airplane).

(4) Cockpit-mounted area microphones.

(c) In addition to the requirements of paragraphs (a) and (b) of this section, the cockpit voice recorder must be installed so that:

(1) It receives its electric power from the bus of maximum reliability;

(2) There is an automatic means to assure that any erasure feature ceases to function at the instant of crash impact; and

(3) There is an aural or visual means for preflight checking of the recorder for proper operation.

(d) The recording requirements of paragraph (a)(2) of this section shall be met by installing one or more cockpit-mounted area microphones arranged to pick up continuously all voice communications by flight crewmembers when at their assigned stations on the flight deck. The microphones shall be located, and the preamplifiers and filters of the recorder shall be adjusted or supplemented if necessary, so that the intelligibility of the recorder communications will be as high as practicable, when recorded under flight cockpit noise conditions and played back. Repeated aural or visual playback of the record may be employed in evaluating the intelligibility. Where a satisfactory level of intelligibility cannot be obtained by the use of cockpit-mounted area microphones, headset boom-mounted microphone or equivalent shall be installed in lieu of cockpit-mounted area microphones.

2. By amending Part 40 by adding a new § 40.212 to read as follows:

§ 40.122 Cockpit voice recorders.

(a) An approved cockpit voice recorder shall be installed in each airplane having a maximum certificated takeoff weight of more than 12,500 pounds on or before the following dates:

(1) July 1, 1965, for all turbine-powered airplanes;

(2) January 1, 1966, for all pressurized reciprocating four-engine airplanes; and

(3) July 1, 1966, for all other airplanes.

(b) The cockpit voice recorder shall be installed in accordance with the requirements of Part 4b of this subchapter.

(c) The cockpit voice recorder shall be operated continuously from the start of the use of the checklist prior to starting engines for the purpose of flight to the completion of the final checklist at the termination of the flight. In complying with this requirement, an approved cockpit voice recorder having an erasure feature may be utilized, so that at any instant during the operation of the recorder, information recorded more than 30 minutes earlier may be erased or otherwise obliterated.

(d) In the event of an accident or occurrence requiring immediate notification to the Board, the recorded information shall be retained by the air carrier or commercial operator for a period of at least 60 days or, if requested by an authorized representative of the Administrator or the Board, for a longer period.

3. By promulgating amendments to Parts 41 and 42 of the Civil Air Regulations similar to that proposed in item 2 herein.

4. By amending Part 91 [New] by adding a new § 91.36 to read as follows:

§ 91.36 Cockpit voice recorders.

(a) Except as provided in paragraph (e) of this section, no holder of an air carrier or commercial operator certificate may operate any of the following airplanes on or after the prescribed dates, unless there is installed on that airplane an approved cockpit voice recorder meeting the requirements of paragraph (b) of this section and that cockpit voice recorder is operated in accordance with paragraph (c) of this section:

(1) Large turbine-powered airplanes, July 1, 1965;

(2) Large pressurized reciprocating four-engine airplanes, January 1, 1966; and

(3) All other large airplanes, July 1, 1966.

(b) The cockpit voice recorder shall be installed in accordance with the requirements of Part 4b of this subchapter.

(c) The cockpit voice recorder shall be operated continuously from the start of the use of the checkoff list prior to starting engines for the purpose of flight to the completion of the final checklist at the termination of the flight. In complying with this requirement, an approved cockpit voice recorder having an erasure feature may be utilized, so that at any instant during the operation of the recorder, information recorded more than 30 minutes earlier may be erased or otherwise oblitered. However, flight may be conducted without an operating cockpit voice recorder in order to:

(1) Ferry an aircraft with an inoperative cockpit voice recorder from a place where repair or replacement cannot be made to a place where they can be made;

(2) Continue a flight as originally planned, if the cockpit voice recorder becomes inoperative after the airplane has taken off; or

(3) Conduct an airworthiness flight test, during which the cockpit voice recorder is turned off to test it or to test any communications or electrical equipment installed in the aircraft.

(d) In the event of an accident or occurrence requiring immediate notification to the Board, the recorded information shall be retained by the air carrier or commercial operator for a period of at least 60 days or, if requested by the Administrator or the Board, for a longer period.

(e) This section does not apply to a ferry flight of a newly acquired airplane from the place where possession of it was taken to a base where the cockpit voice recorder is to be installed.

5. By amending Part 514 by adding the following § 514.90:

§ 514.90 Cockpit voice recorder—TSO–C84.

(a) *Applicability.* (1) Minimum performance standards are hereby established for cockpit voice recorders for use on United States civil aircraft. New models of cockpit voice recorders manufactured for use on civil aircraft on or after the effective date of this section shall meet the standards specified in Federal Aviation Agency Standard, "Minimum Performance Standards for Cockpit Voice Recorders," dated November 1, 1963,[1] and Federal Aviation Agency document entitled, "Environmental Test Procedures for Airborne Electronic Equipment," dated August 31, 1962,[1] except as provided in subparagraph (2) of this paragraph.

(2) Federal Aviation Agency document, "Environmental Test Procedures for Airborne Electronic Equipment," outlines various test procedures which define the environmental extremes over which the equipment shall be designed to operate. Some test procedures have categories established and some do not. Where categories are established, only equipment which qualifies under one or more of the following categories, as specified in the FAA document, is eligible for approval under this order:

(i) Temperature-Altitude Test—Categories A, B, C, or D;

(ii) Vibration Test—Categories A, B, C, D, E, or F;

(iii) Audio-Frequency Magnetic Field Susceptibility Test—Categories A or B;

(iv) Radio-Frequency Susceptibility Test—Category A; and

(v) Emission of Spurious Radio-Frequency Energy Test—Category A.

(b) *Marking.*

(1) In addition to the markings specified in § 514.3(d), the equipment shall be marked to indicate the environmental extremes over which it has been designed to operate. There are six environmental test procedures outlined in the FAA document, "Environmental Test Procedures for Airborne Electronic Equipment," which have categories established. These shall be identified on the nameplate by the words "environmental categories" or, as abbreviated, "Env. Cat." followed by six letters which identify the categories under which the equipment is qualified. Reading from left to right, the category designations shall appear on the nameplate in the following order so that they may be readily identified:

(i) Temperature-Altitude Category;

(ii) Vibration Test Category;

(iii) Audio-Frequency Magnetic Field Susceptibility Test Category;

(iv) Radio Frequency Susceptibility Test Category;

(v) Emission of Spurious Radio-Frequency Energy Test Category; and

(vi) Explosion Test.

(2) Equipment which meets the explosion test requirement shall be identified by the letter "E". Equipment which does not meet the explosion test requirement shall be identified by the letter "X". A typical nameplate identification would be as follows: Env. Cat. DBAAAX.

(3) In some cases such as under the Temperature-Altitude Test Category, a manufacturer may wish to substantiate his equipment under two categories. In this case, the nameplate shall be marked with both categories in the space designated for that category by placing one letter above the other in the following manner: Env. Cat. $\frac{A}{D}$BAAAX.

(c) *Data requirements.* In accordance with the provisions of § 514.2, the manufacturer shall furnish to the Chief, Engineering and Manufacturing Branch, Flight Standards Division, Federal Aviation Agency, in the region in which the manufacturer is located the following technical data:

(1) Six copies of the manufacturer's operating instructions and equipment limitations;

(2) Six copies of the installation procedures with applicable schematic drawings, wiring diagrams, and specifications, indicating any limitations, restrictions, or other conditions pertinent to installation; and

(3) One copy of the manufacturer's test report.

Issued in Washington, D.C., on December 12, 1963.

G. S. MOORE,
Director,
Flight Standards Service.

[F.R. Doc. 63-13062; Filed, Dec. 17, 1963; 8:45 a.m.]

[1] Copies may be obtained upon request addressed to the Federal Aviation Agency, Attention HQ-620, Washington, D.C., 20553.

(As published in the Federal Register /28 F.R. 13786/ on December 18, 1963)

FEDERAL AVIATION AGENCY

MINIMUM PERFORMANCE STANDARDS FOR COCKPIT VOICE RECORDERS

November 1, 1963

TABLE OF CONTENTS

INTRODUCTION v

1.0 GENERAL STANDARDS 1
- 1.1 Operation of Controls 1
- 1.2 Accessibility of Controls 1
- 1.3 Effects of Test 1
- 1.4 Recording Channels 1
- 1.5 Input Circuit Design 1
- 1.6 Recording Speed 1

2.0 MINIMUM PERFORMANCE STANDARDS UNDER STANDARD TEST CONDITIONS 1
- 2.1 Continuity of Recording 1
- 2.2 Retention of Recorded Information 1
- 2.3 Means for Functional Test 1
- 2.4 Audio-Frequency Response 1
- 2.5 Distortion 1
- 2.6 Audio Noise Level—Without Input Signal 1
- 2.7 Coupling Between Audio Circuits 1
- 2.8 Flutter 2
- 2.9 Stray Magnetic Field 2
- 2.10 Insulation Resistance 2
- 2.11 Cockpit-Mounted Area Microphone Assembly 2

3.0 MINIMUM PERFORMANCE STANDARDS UNDER ENVIRONMENTAL CONDITIONS 2
- 3.1 Temperature-Altitude Test 2
- 3.2 Humidity Test 3
- 3.3 Shock Test 3
- 3.4 Vibration Test 3
- 3.5 Temperature Variation Test 3
- 3.6 Power Input Test 3
- 3.7 Conducted Voltage Transient Test 3
- 3.8 Conducted Audio-Frequency Susceptibility Test 3
- 3.9 Audio-Frequency Magnetic Field Susceptibility Test 3
- 3.10 Radio-Frequency Susceptibility Test (Radiated and Conducted) 3
- 3.11 Explosion Test 3
- 3.12 Water Immersion Test 3
- 3.13 Impact Shock and Fire Protection Test 4
- 3.14 Emission of Radio-Frequency Energy 4

APPENDIX A

1.0 TEST CONDITIONS 5

INTRODUCTION

The standards contained herein apply to recording equipment intended for installation in aircraft for the purpose of automatically recording during flight certain flight crew aural communications within the aircraft (among crew members) and outside the aircraft (by radio). The record of these aural communications will be used by aircraft accident investigation personnel to assist them in their duties. The equipment covered by these standards is defined in Appendix A.

Equipment performance under environmental conditions which are normally encountered in routine aeronautical operations are specified herein. In addition, standards are established respecting the ability of the recording medium to survive those conditions likely to be encountered in the event of a serious accident such as crash forces, fire and water.

MINIMUM PERFORMANCE STANDARDS FOR COCKPIT VOICE RECORDERS

1.0 GENERAL STANDARDS.

1.1 *Operations of Controls.* The operation of controls intended for use during flight, (if any), in all possible position combinations and sequences, shall not result in a condition the presence or continuation of which would be detrimental to the continued performance of the equipment.

1.2 *Accessibility of Controls.* Controls which are not normally adjusted in flight shall not be readily accessible to flight personnel.

1.3 *Effects of Test.* Unless otherwise provided, the design of the equipment shall be such that, subsequent to the application of the specified tests, no discernible condition exists which would be detrimental to the continued performance of the equipment.

1.4 *Recording Channels.* The equipment shall be capable of recording simultaneously at least four channels of information.[1]

1.5 *Input Circuit Design.* The design of the equipment shall be such that the connection of the equipment's audio input circuits to other aircraft audio circuits, when accomplished in a manner prescribed by the equipment manufacturer, shall have no adverse effect on the performance of those aircraft audio circuits.

1.6 *Recording Speed.*

a. The speed at which the recording medium is driven past the recording mechanism shall be compatible with the speed used in a commercially available reproduction equipment capable of satisfactorily reproducing aurally the recorded information on the recording medium.

b. The recording speed shall not vary more than ± 7% from the design speed.

2.0 MINIMUM PERFORMANCE STANDARDS UNDER STANDARD TEST CONDITIONS.

The test conditions applicable to a determination of the performance of Cockpit Voice Recorders under standard test conditions are set forth in Appendix A of this standard.

2.1 *Continuity of Recording.* When power is applied to the equipment, the equipment shall continuously record without interruption all information applied to each of the four required recording channel inputs.[2]

2.2 *Retention of Recorded Information.* The information recorded on each of the four required channels for at least the full thirty minute period immediately preceding reoval of electrical power to the equipment shall be retained on the recording medium. Information recorded prior to the period thirty minutes immediately preceding removal of power to the equipment may be erased or otherwise obliterated. When electrical power is removed from the equipment, the erasure function shall cease.

2.3 *Means for Functional Test.* An aural or visual means shall be provided for preflight checking the recorder for proper operation.

2.4 *Audio-Frequency Response.* When the level of an audio input signal applied to any of the four required recording channel inputs is held constant and its frequency is varied over the range of 350–3,000 c.p.s., the level of the signal recorded on the recording medium[3] shall not vary more than a total range of 6 db. The input signal level used shall be within the equipment manufacturer's input level limitaltons.

2.5 *Distortion.* The combined noise and distortion of the recorded signal[3] shall not exceed:

a. Ten percent, when the level of the input signal applied to any of the four required recording channels is equal to the maximum level for which the equipment is designed, and

b. Six percent, when the level of the input signal is equal to 0.1 of the maximum level for which the equipment is designed.

This standard shall be met at the audio frequency of 1,000 c.p.s.

2.6 *Audio Noise Level—Without Input Signal.* With no input signal applied to any of the four required recording channel inputs, the level of the noise recorded on the recording medium[3] shall be at least 35 db below that level recorded on the recording medium when an input signal at the frequency of maximum response of the channel and having a level equal to the maximum level for which the equipment is designed is applied to the same recording channel input.

2.7 *Coupling Between Audio Circuits.* When a 1,000 c.p.s. input signal having an ampiltude equal to the maximum for which the equipment is designed is

---

[1] See paragraph 2.11.a.

[2] The term "recording channel input" means that point in the equipment circuitry which is ahead of all amplifiers used in the specific recording channel under consideration. This does not include such amplifiers as may be used in the Cockpit-Mounted Area Microphone Assembly (See paragraph 2.11).

[3] When measured at the output of a suitable reproduction equipment.

applied to any one of the four required recording channel inputs, the level of the signal recorded on that portion of the recording medium assigned to each of the other recording channels[3] shall be at least 35 db below the level recorded on the channel to which the input signal is applied.

2.8 *Flutter.* When an input having an amplitude equal to the maximum for which the equipment is designed is applied to any of the four required recording channel inputs, the level of any flutter frequency between 0.5 and 250 c.p.s recorded on the recording medium[4] shall not exceed 2 percent r.m.s. of the level of the input signal recorded on that channel.

2.9 *Stray Magnetic Field.* When the cockpit-mounted area microphone assembly of the equipment is placed in an operating condition in an area free from local magnetic disturbances, the stray magnetic field of this microphone assembly shall cause not more than a 5 degrees deflection of a magnetic compass when the closest edge of the microphone assembly is located at a distance of 12 inches from the compass.

2.10 *Insulation Resistance.* The resistance between any exposed conducting material of the cockpit-mounted microphone assembly of the equipment (non-electrical circuit) and the electrical circuit of this assembly, shall be at least 10 megohms when measured with an applied voltage of at least 500 volts d.c.

2.11 *Cockpit-Mounted Area Microphone Assembly.*

a. *General Design Features.* The mechanical design of the cockpit-mounted area microphone assembly may be such that all of the components of this assembly (such as the preamplifier or its components) need not be located in the same physical unit as the cockpit-mounted area microphone itself, provided all of the applicable performance standards contained in this document are met. The electrical design of this assembly, however, shall be such that the electrical output (without alteration) of the assembly can be applied directly to two of the four required recording channel inputs.

b. *Frequency Response—Microphone only.* The output level of the microphone shall not vary more than 12 db (total spread) when exposed to a constant pressure sound source which is varied over the frequency range of 400 to 3,000 c.p.s. This requirement shall be met over a sound pressure input range of 60 db to 120 db above 0.0002 dyne per square centimeter.

c. *Frequency Response—Microphone Preamplifier only.*

(1) The output level of the microphone preamplifier shall not vary more than 6 db (total spread) when the frequency of an input signal is varied over the pass band for which the equipment is designed and its level is held constant.

(2) When an input signal of constant level is increased in frequency from 3,000 c.p.s. upwards, the output level of the microphone preamplifier shall continuously decrease.

(3) Means shall be provided in the equipment so that the lower cutoff frequency of the microphone preamplifier can be adjusted between 700 and 1,000 c.p.s. This means of adjustment shall not be accessible to flight crew personnel. The output level of the microphone preamplifier shall decrease at a rate of at least 15 db per octave when the frequency of a constant level input signal is decreased from the lower cutoff frequency to which the preamplifier may be adjusted.

d. *Harmonic Distortion—Microphone Preamplifier only.* When a signal of 1,000 c.p.s. or less, within the pass band for which the equipment is designed is applied to the input terminals of the preamplifier and with the gain adjusted to produce maximum rated voltage on the output terminals with an input level equivalent to that produced by the microphone(s), for which the preamplifier is designed, exposed to a sound pressure of up to 120 db above 0.0002 dyne per square centimeter, the total harmonic distortion shall not exceed 10 percent.

e. *Harmonic Distortion—Microphone only.* When the cockpit-mounted area microphone is exposed to a sound pressure source within the range of 60 db to 120 db above 0.0002 dyne per square centimeter at a frequency of 500 c.p.s., the total harmonic distortion of the output of the microphone shall not exceed 10 percent.

3.0 MINIMUM PERFORMANCE STANDARDS UNDER ENVIRONMENTAL CONDITIONS.

Unless otherwise specified herein, the environmental test procedures applicable to a determination of the performance of cockpit voice recorders under environmental test conditions are set forth in FAA document entitled "Environmental Test Procedures for Airborne Electronic Equipment", dated August 31, 1962.

3.1 *Temperature-Altitude Test.*

a. Low-Temperature Test. When subjected to this test:

(1) The requirements of paragraphs 1.6b., 2.1, 2.3, 2.4, 2.5, 2.8, 2.11c. and 2.11d. shall be met.

(2) All mechanical devices shall perform their intended functions.

(3) Following the application of this test, the requirements of paragraphs 2.11b. and 2.11e. shall be met.

b. High Temperature Test.

(1) When the equipment is operated at the high short-time operating temperature:

(a) The requirementsof paragraphs 1.6b., 2.1, 2.3, 2.4, 2.5, 2.8, 2.11c. and 2.11d. shall be met.

(b) All mechanical devices shall perform their intended functions.

(2) When the equipment is operated at the high operating temperature:

(a) The requirements of paragraphs 2.1, 2.3, 2.4, 2.5, 2.8, 2.11c. and 2.11d. shall be met.

(b) All mechanical devices shall perform their intended functions.

(3) Immediately following completion of the high temperature test and upon inspection, there shall be no evidence of materials (such as grease or potting compounds) exuding or dripping from the equipment's components.

(4) Following the application of this test, the requirements of paragraphs 2.11b. and 2.11e. shall be met.

c. *Altitude Test.* When subjected to this test:

(1) The requirements of paragraphs 2.1, 2.4, and 2.11c. shall be met, and all mechanical devices shall perform their intended functions.

(2) Following the application of this test, the requirements of paragraphs 2.11b. and 2.11e. shall be met.

d. *Decompression Test.* (Applicable only to Category D equipment of the Temperature-Altitude Test.)

(1) Throughout the decompression test including the prescribed 10-minute period that the equipment is at the decompression test altitude, the requirements of paragraphs 2.1, 2.4 and 2.11c. shall be met, and all mechanical devices shall perform their intended functions.

(2) Following the application of this test, the requirements of paragraphs 2.11b. and 2.11e. shall be met.

3.2 *Humidity Test.*

a. After subjection to this test and immediately following the 15-minute warmup period, the requirements of paragraphs 1.6b., 2.1, 2.4, 2.5, 2.7, 2.8, 2.11c. and 2.11d. shall be met. In addition, all mechanical devices shall perform their intended functions.

b. Following the application of this test, the requirements of paragraphs 2.11b. and 2.11e. shall be met.

3.3 *Shock Test.*

a. Following the application of the operational 6G shocks, the requirements of paragraphs 2.1, 2.2, 2.3, 2.4, 2.5, 2.6, 2.7, 2.8, 2.11b., 2.11c., 2.11d. and 2.11e. shall be met and all mechanical devices shall perform their intended functions.

b. Following the application of the crash safety 15G shocks, the equipment shall have remained in its mounting and no part of the equipment or its mounting shall have become detached and free of the table or of the equipment.[4]

3.4 *Vibration Test.* When subjected to this test:

a. The requirements of paragraphs 1.6b., 2.1, 2.4, 2.6, 2.7, 2.8 and 2.11c. shall be met and all mechanical devices shall perform their intended functions.

b. Following the application of this test, the requirements of paragraphs 2.11b. and 2.11e. shall be met.

3.5 *Temperature Variation Test.* When the equipment is subjected to this test, the requirements of paragraphs 1.6b., 2.1, and 2.8 shall be met and all mechanical devices shall perform their intended functions.

3.6 *Power Input Test.*

a. Power Input Variation Test. When the equipment is subjected to this test, the requirements of paragraphs 1.6b., 2.1, 2.2, 2.4, 2.5, 2.11c., and 2.11d. shall be met. In addition, all mechanical devices shall perform their intended functions.

b. Low Voltage Test.

(1) When the equipment is subjected to the test specified in paragraph 9.2a. Low Voltage Test, of the FAA document, "Environmental Test Procedures for Airborne Electronic Equipment", dated August 31, 1962, it shall operate electrically and mechanically. Moderate degradation of performance is permissible.

(2) When the equipment is subjected to the test specified in paragraph 9.2b.(1) Low Voltage Test, of the FAA document, "Environmental Test Procedures for Airborne Electronic Equipment", dated August 31, 1962, the requirements of paragraphs 2.1, 2.2, 2.5 and 2.11d. shall be met. In addition, all mechanical devices shall perform their intended functions.

(3) When the equipment is subjected to the test specified in paragraph 9.2b.(2) Low Voltage Test, of the FAA document, "Environmental Test Procedures for Airborne Electronic Equipment", dated August 31, 1962, there shall be no evidence external to the equipment, of the presence of fire or smoke.[4]

3.7 *Conducted Voltage Transient Test.*

a. Following the intermittent transients tests, the equipment shall meet the requirements of paragraphs 2.1, 2.4, 2.5, 2.11c. and 2.11d.

b. When the equipment is subjected to the repetitive transients test, the requirements of paragraphs 2.1, 2.4, 2.5, 2.6, 2.11c. and 2.11d. shall be met.

3.8 *Conducted Audio-Frequency Susceptibility Test.* When the equipment is subjected to this test, the requirements of paragraphs 2.3, 2.5, 2.6, and 2.11d. shall be met.

3.9 *Audio-Frequency Magnetic Field Susceptibility Test.* When subjected to this test, the equipment shall meet the requirements of paragraphs 2.3, 2.6 and 2.11d.

3.10 *Radio-Frequency Susceptibility Test (Radiated and Conducted).* When subjected to these tests, the equipment shall meet the requirements of paragraphs 2.1, 2.2, 2.3, 2.5, 2.6, 2.11c. and 2.11d.

3.11 *Explosion Test.* If the equipment is intended for installation where an explosive atmosphere may exist, the equipment shall be subjected to the explosion test. During the application of this test, the operation of the equipment shall not cause detonation of the explosive mixture within the test chamber.[4]

3.12 *Water Immersion Test.* (This test is in addition to those contained in the FAA document "Environmental Test Procedures for Airborne Electronic Equipment", dated August 31, 1962.)

a. Apply to each of the four required recording channel inputs and input signal of 1,000 c.p.s. having a level within the range for which the equipment is designed for a period of 30 minutes.

b. Remove the recording medium from the equipment and play it back on a suitable play-back equip-

[4] The application of this test may result in damage to the equipment under test. Paragraph 1.3 does not apply.

ment and determine the output level and distortion characteristics of the 1,000 c.p.s. signal on each channel using appropriate measuring equipment. Note the volume and tone control (if any) settings of the play-back equipment during this portion of the test and also the input power voltage.

c. Remove the recording medium from the play-back equipment and completely immerse it in sea water at ambient room temperature for a period of at least 48 hours. During this portion of the test, the recording medium shall be normally mounted with respect to the recording mechanism, and such recording medium spools, conveyors and storage devices as may be a part of the equipment under test.

d. Remove the recording medium from the sea water and dry it using drying techniques suitable to the particular recording medium material.

e. Using the same play-back equipment, measuring equipment, and control and input power voltage settings used in b., play back the recording medium and determine the output level and distortion characteristics of the 1,000 c.p.s. signal on each channel. There shall be no more than a 2 db change from that previously measured in b., for either of these performance parameters and the recording medium shall be intact at the completion of the play-back.

3.13 *Impact Shock and Fire Protection Test.* (This test is in addition to those contained in the FAA document "Environmental Test Procedures for Airborne Electronic Equipment", dated August 31, 1962.)

a. Apply to each of the four required recording channel inputs an input signal of 1,000 c.p.s. having a level within the range for which the equipment is designed for a period of 30 minutes.

b. Remove the recording medium from the equipment and play it back on a suitable play-back equipment and determine the output level and distortion characteristic of the 1,000 c.p.s. signal on each channel using appropriate measuring equipment. Note the volume and tone control (if any) settings of the play-back equipment during this portion of the test and also the input power voltage.

c. Replace the recording medium in the equipment under test in its normal location and subject that major component of the equipment under test which contains the recording medium, the recording mechanism, and such recording medium spools, conveyors and storage devices as may be parts of the equipment to an impact shock having a peak acceleration of at least 100G and a time duration of at least 11 milliseconds. If the shape of the equipment under test is other than spherical, the impact shock force shall be applied in the direction of the longest diagonal line that can be drawn through the equipment under test.

d. Without making any repairs or alterations to that major component of the equipment which was subjected to the impact shock test in subparagraph c., subject it to fire of at least 1,100°C. The flames of the fire shall envelope at least 50 percent of the outside area of the equipment under test for a continuous and uninterrupted period of at least 30 minutes. If, subsequent to the impact shock test in c., a visual inspection of the outside of the equipment under test reveals areas of cracks, holes or other openings not existant prior to the impact shock test, these areas shall be included to the greatest extent possible in the required 50 percent of the outside area of the equipment that is enveloped by flames. Allow the equipment under test to cool naturally without the aid of water or other forced cooling.

e. Remove the recording medium from the equipment which has been exposed to impact shock and fire and, using he same play back equipment, measuring equipment and control and input power voltage settings used in b., play-back the recording medium and determine the output level and distortion characteristics of the 1,000 c.p.s. signal on each channel. There shall be no more than a 2 db change from that previously measured in b., for either of these performance parameters and the recording medium shall be intact at the completion of the play-back.

3.14 *Emission of Radio-Frequency Energy.* The levels of conducted and radiated spurious radio-frequency energy emitted by the equipment shall not exceed those levels specified in Appendix A to the Federal Aviation Agency document, "Environmental Test Procedures for Airborne Electronic Equipment", dated August 31, 1962, for the aircraft category for which the equipment is designed.

APPENDIX A

1.0 *Test Conditions.* The following definitions of terms and conditions of test are applicable:

a. *Equipment.* The word "equipment" as used in these standards includes all of the components or units necessary (as determined by the equipment manufacturer) to meet the performance criteria specified herein. It may include a microphone assembly intended for mounting in the aircraft cockpit to pick up all vocal expressions of those flight crew members located within the cockpit (cockpit mounted area microphone); the channel amplifiers; the recording medium and its associated transport mechanism and storage device; and shockmounts, power supplies, and control boxes if these items are intended by the manufacturer to be used with the equipment.

b. *Power Input Voltage—Direct Current.* Unless otherwise specified, when the equipment is designed for operation from a direct current power source, all measurements shall be conducted with the power input voltage adjusted to 13.75 v. ±2% for 12–14 v. equipment, or to 27.5 v., ±2% for 24–28 v. equipment. The input voltage shall be measured at the equipment power input terminals.

c. *Power Input Voltage—Alternating Current.* Unless otherwise specified, when the equipment is designed for operation from an alternating current power source, all tests shall be conducted with the power input voltage adjusted to design voltage ±2%. In the case of equipment designed for operation from a power source of essentially constant frequency (e.g., 400 c.p.s.), the input frequency shall be adjusted to design frequency ±2%. In the case of equipment designed for operation from a power source of variable frequency (e.g., 350 to 1,000 c.p.s.), tests shall be conducted with the input frequency adjusted to within 5% of a selected frequency within the range for which the equipment is designed.

d. *Adjustment of Equipment.* The circuits of the equipment shall be properly adjusted in accordance with the manufacturer's recommended practices prior to the application of the specified tests.

e. *Test Instrument Precautions.* Due precautions shall be taken to prevent the introduction of errors resulting from the connection of headphones, voltmeters, oscilloscopes, and other test instruments across the input and output impedances of the equipment during the conduct of the tests.

f. *Ambient Conditions.* Unless otherwise specified, all tests shall be conducted under conditions of ambient room temperature, pressure, and humidity. However, the room temperature shall not be lower than 10° C.

g. *Warmup Period.* Unless otherwise specified, all tests shall be conducted after a warmup period of not less than 15 minutes.

h. *Connected Loads.* Unless otherwise specified, all tests shall be conducted with the equipment inputs and outputs connected to loads having the impedance value for which the equipment is designed.

i. *Nonapplicability of Conditions of Test.* In those cases in which it can be shown that the conditions of test set forth above are not applicable to a particular equipment, the conditions of test may be modified as required by the design of the equipment.

FEDERAL AVIATION AGENCY
WASHINGTON, D.C.

ENVIRONMENTAL TEST PROCEDURES FOR AIRBORNE ELECTRONIC EQUIPMENT

AUGUST 31, 1962

TABLE OF CONTENTS

		Page
1.0	Purpose	1
2.0	Definition of Terms	1
	2.1 Equipment Temperature Stabilization	1
	2.2 Maximum Duty Cycle	1
	2.3 Not Operating	1
	2.4 Controlled Temperature Location	1
3.0	Conditions of Test	1
	3.1 *Connection of Equipment*	1
	3.2 Order of Tests	1
	3.3 Measurement of Temperature of Air in Test Chamber	1
	3.4 Ambient Room Temperature	1
	3.5 Power Input Voltage	1
	3.6 Power Input Frequency	1
4.0	Temperature—Altitude Test	1
	Category A	1
	Category B	1
	Category C	1
	Category D	1
	Category E	1
	Category F	1
	4.1 Test Procedure (Low Temperature)	2
	4.2 Test Procedure (High Temperature)	2
	4.3 Test Procedure (Altitude)	2
	Table 1	2
5.0	Humidity Test	3
6.0	Shock Test	3
	6.1 Operational Shocks	3
	6.2 Crash Safety Shocks	3
7.0	Vibration Test	3
	7.1 Test Procedure	3
	Table 2	4
	7.2 Vibration Characteristics of Categories	4
8.0	Temperature Variation Test	4
	8.1 Alternate Test Procedure	4
9.0	Power Input Test	4
	9.1 Power Input Variation Test	4
	9.2 Low Voltage Test	5
10.0	Conducted Voltage Transient Test	5
	10.1 *Intermittent Transients*	5
	10.2 Repetitive Transients	6
	Figure 1	7
	Figure 2	7
	Figure 3	5
11.0	Conducted Audio-Frequency Susceptibility Test	5
	11.1 D.C. Input Power Leads	5
	11.2 A.C. Input Power Leads	5
12.0	Audio Frequency Magnetic Field Susceptibility Test	5
	12.1 Categories of Equipment	5
	12.2 Test Procedure	5

		Page
13.0	Radio Frequency Susceptibility Test (Radiated and Conducted)	8
13.1	General Requirements	8
13.2	Conducted Radio Frequency Susceptibility Test	8
13.3	Radiated Radio Frequency Susceptibility Test	9
	Figure 4	9
	Figure 5	10
	Figure 6	10
	Figure 7	11
	Figure 8	11
	Figure 9	12
	Figure 10	13
	Figure 11	14
	Figure 12	14
14.0	Explosion Test	12
14.1	Application and Conditions of Test	12
14.2	Test Procedures	12
	Figure 13	15

APPENDIX A

		Page
INTRODUCTION		17
1.0	Standards on Emission of Spurious Radio Frequency Energy	19
2.0	Test Procedure	19
	Figure 14	20
	Figure 15	21
	Figure 16	22
	Figure 17	23
	Figure 18	24
	Figure 19	25
	Figure 20	26
	Figure 21	26
	Figure 22	27
	Figure 23	27
	Figure 24	28
	Figure 25	28
	Figure 26	29

Federal Aviation Agency Document

For

Environmental Test Procedures for Airborne Electronic Equipment

1.0 ***Purpose.*** This report sets forth Environmental Test Procedures applicable to airborne electronic equipment. The purpose of these tests is to provide a laboratory means of determining the performance characteristics of the equipment under conditions representative of those which may be encountered in actual aeronautical operations.

2.0 ***Definition of Terms.***

2.1 ***Equipment Temperature Stabilization.*** Equipment temperature stabilization is that condition wherein (1) the temperature of the largest internal mass is within ±3° C. of the specified value when the equipment is not operating, or (2) the crest temperatures of the largest internal mass do not differ by more than 5° C. when the equipment is operating.

2.2 ***Maximum Duty Cycle.*** Maximum duty cycle is the relationship between the maximum length of time for which an equipment is designed to deliver its rated output power and the length of time during which "standby" power only may be applied when such "ON-OFF" operation is periodic.

2.3 ***Not Operating.*** Not operating is that condition wherein no power is applied to the equipment.

2.4 ***Controlled Temperature Location.*** Controlled temperature location is a space within an aircraft in which the temperature of the air is maintained, either manually or automatically, within the limits specified in the appropriate category of Table 1 of paragraph 4.0, Temperature-Altitude Test.

3.0 ***Conditions of Test.***

3.1 ***Connection of Equipment.*** Connect the equipment mechanically and electrically as recommended by the manufacturer, including any cooling provisions, to the extent necessary to make such tests and measurements as are required to determine compliance with the applicable standards of paragraph 3.0, "Minimum Performance Standards under Environmental Test Conditions", of the appropriate FAA airborne electronic equipment Minimum Performance Standards.

3.2 ***Order of Tests.*** The tests may be conducted in any desired order, with the exception that the humidity test shall not be conducted prior to the temperature-altitude and the vibration tests. The purpose of this exception is to determine whether materials used to protect circuit elements from moisture have lost their protective function due to deterioration from exposure to either extreme temperatures or to vibration.

3.3 ***Measurement of Temperature of Air in Test Chamber.***

a. The temperature of the air in the test chamber shall be measured at such a location within the test chamber that the temperature of the air so measured its representative of that immediately surrounding the equipment. Measurement of chamber wall temperature is not suitable, due to temperature lag and heat transfer through the chamber wall.

b. Means of circulating the air in the test chamber may be employed to approximate a uniform air temperature condition throughout the chamber. When such means are employed, the air blast shall not be directed upon the equipment under test.

3.4 ***Ambient Room Temperature.*** When tests are conducted under "ambient room temperature", the ambient room air temperature shall be between +10° C. and +40° C.

3.5 ***Power Input Voltage.*** Unless specified otherwise, all tests shall be conducted with the power input voltage adjusted to design voltage ±2%. The input voltage shall be measured at the equipment power input terminals.

3.6 ***Power Input Frequency.***

a. In the case of equipment designed for operation from an a.c. power source of essentially constant frequency (e.g., 400 c.p.s.), the input frequency shall be adjusted to design frequency ±2%, unless otherwise specified.

b. In the case of equipment designed for operation from an a.c. power source of variable frequency (e.g., 300 to 1,000 c.p.s.), tests shall be conducted with the input frequency adjusted to within 5% of a selected frequency and within the input power frequency range for which the equipment is designed, unless otherwise specified.

4.0 ***Temperature-Altitude Test.*** Several temperature-altitude test procedures are specified,[1] according to the category for which the equipment is designed to be used, as follows:

Category A—Equipment intended for installation in nonpressurized and noncontrolled temperature locations in aircraft which operate at altitudes up to 45,000 feet m.s.l.

Category B—Equipment intended for installation in nonpressurized and noncontrolled temperature locations in aircraft which operate at altitudes up to 30,000 feet m.s.l.

Category C—Equipment intended for installation in nonpressurized and noncontrolled temperature locations in aircraft which operate at altitudes up to 20,000 feet m.s.l.

Category D—Equipment intended for installation in controlled temperature and pressurized locations in aircraft in which the pressures are no lower than that which is equivalent to an altitude of 15,000 feet m.s.l.

Category E—Equipment intended for installation in nonpressurized but controlled temperature locations in aircraft which operate at altitudes up to 20,000 feet m.s.l.

Category F—Equipment intended for installation in nonpressurized but controlled temperature locations in aircraft which operate at altitudes up to 12,000 feet m.s.l.

---

[1] The temperature-altitude test and the temperature variation test may be combined, if desired. See paragraph 8.1, Alternate Test Procedure.

4.1 *Test Procedure (Low Temperature).* Stabilize the equipment temperature at the appropriate (depending upon category used) Low Not Operating Temperature specified in Table 1 at ambient room atmospheric pressure, with equipment not operating.[2] Maintain this stabilized temperature for 30 minutes; then stabilize the equipment temperature at the appropriate Low Operating Temperature specified in Table 1 at ambient room atmospheric pressure, with the equipment not operating. Then operate the equipment at maximum duty cycle for a period of 15 minutes, beginning with the "ON" cycle in the case of equipment designed for intermittent duty service. Maintain the temperature of the air in the test chamber within 3° C. of the Low Operating Temperature of Table 1. Determine the compliance with the applicable standards of paragraph 3.0 "Minimum Performance Standards under Environmental Test Conditions" of the appropriate FAA airborne electronic equipment Minimum Performance Standards.[3]

4.2 *Test Procedure (High Temperature).*

a. At ambient room pressure, with the equipment not operating, stabilize the equipment temperature to within 3° C. of the appropriate High Not Operating Temperature of Table 1. After 30 minutes, adjust the test chamber air temperature to within 3° C. of the High Short-time Operating Temperature specified in Table 1. Operate the equipment at maximum duty cycle for 30 minutes. Determine compliance with the applicable standards of paragraph 3.0, "Minimum Performance Standards under Environmental Test Conditions", of the appropriate FAA airborne electronic equipment Minimum Performance Standards during this 30-minute period.

[2] This is not intended to be a temperature shock test. The rate at which the temperature of the equipment under test is reduced from ambient to the appropriate Low Not Operating Temperature specified in Table 1 is optional.

[3] Optionally, the tests specified in this paragraph (4.1) may be commenced with the initial temperature of the equipment at any value between the appropriate Operating and Low Not Operating Temperatures specified in Table 1.

NOTE: The purpose of this test is to simulate temperature conditions which may be encountered in aircraft while on the ground in certain geographical areas.

b. With the equipment operating, adjust the test chamber air temperature to within 3° C. of the appropriate High Operating Temperature specified in Table 1 at ambient room pressure. After the equipment temperature has become stabilized, operate the equipment for two (2) hours and determine compliance with the applicable standards of Paragraph 3.0, "Minimum Performance Standards under Environmental Test Conditions", of the appropriate FAA airborne electronic equipment Minimum Performance Standards.

4.3 *Pest Procedure (Altitude).*

a. Operate the equipment at maximum duty cycle. Decrease the atmospheric pressure to within 5% of the appropriate Test Altitude specified in Table 1. Conduct this test at ambient room temperature. Determine compliance with the applicable standards of Paragraph 3.0, "Minimum Performance Standards under Environmental Test Conditions", of the appropriate FAA airborne electronic equipment Minimum Performance Standards.

b. This test is intended for application only to Category D equipment. With the equipment operating at the Test Altitude specified in Table 1, reduce the atmospheric pressure to that equivalent to the Decompression Test Altitude specified in Table 1. This reduction in pressure shall be effected within a time period not to exceed 15 seconds. Maintain this reduced pressure for at least 10 minutes, then increase the pressure to that equivalent to the Test Altitude specified in Table 1. Conduct this test at ambient room temperature. Determine compliance with the applicable standards of paragraph 3.0, "Minimum Performance Standards under Environmental Test Conditions", of the appropriate FAA airborne electronic equipment Minimum Performance Standards.

TABLE 1. ALTITUDE-TEMPERATURE CRITERIA

CONDITION		CAT. A	CAT. B	CAT. C	CAT. D	CAT. E	CAT. F
Maximum Operating Altitude		45,000′	30,000′	20,000′	15,000*	20,000′	12,000′
Test Altitude		55,000′	35,000′	25,000′	20,000*	25,000′	15,000′
Decompression Test Altitude		.....	.....	.....	40,000′	.....	.....
Not Operating Temperature	Low	−62° C.	−50° C.	−50° C.	−50° C.	−40° C.	−40° C.
	High	+71° C.	+71° C.	+71° C.	+71° C.	+71° C.	+71° C.
Short-Time Operating High Temperature		+71° C.	+71° C.	+71° C.	+60° C.	+50° C.	+45° C.
Operating Temperature	Low	−54° C.	−46° C.	−40° C.	−15° C.	−15° C.	−15° C.
	High	+55° C.	+55° C.	+55° C.	+55° C.	+40° C.	+40° C.

*The Maximum Operating Altitude and Test Altitude of Category D equipment represent atmospheres established by pressurization.

5.0 ***Humidity Test.*** Subject the equipment to an atmosphere having a relative humidity of between 95% and 100% and an ambient temperature of 50° C. ± 3° C. for a period of 48 hours. During this 48-hour period, no electrical or mechanical power shall be applied to the equipment. At least once each hour, the relative humidity shall be 100% with condensation on the equipment. At the end of the 48-hour exposure period, remove the equipment from the test chamber and drain off (do not wipe) any condensed moisture. Within five minutes after removal of the equipment from the test chamber, apply standard primary test voltage(s) to the equipment. Allow fifteen minutes following the application of primary power for the equipment to warmup. Immediately following the warmup period, determine compliance with the applicable standards of paragraph 3.0, "Minimum Performance Standards under Environmental Test Conditions" of the appropriate FAA airborne electronic equipment Minimum Performance Standards.

6.0 ***Shock Test.***

6.1 ***Operational Shocks.***

a. Secure the equipment to a shock table by the mounting means intended for use in service installations. *Apply to the shock table, with the equipment mounted* in each of the following six positions, three shocks each having a peak acceleration of at least 6G and a time duration of at least 10 milliseconds.

(1) Normal upright.

(2) Suspended upside down.

(3) At positions such that the longitudinal axis of the equipment successively forms angles of plus 90° and minus 90° (two positions) with the plane of the table.

(4) At positions such that the lateral axis of the equipment successively forms angles of plus 90° and minus 90° (two positions) with the plane of the table.

b. After application of the shocks, determine compliance with the applicable standards of paragraph 3.0, "Minimum Performance Standards under Environmental Test Conditions" of the appropriate FAA airborne electronic equipment Minimum Performance Standards.

6.2 ***Crash Safety Shocks.*** Apply, in each of the six equipment positions listed in paragraph 6.1, one shock having a peak acceleration of at least 15G and a time duration of at least 10 milliseconds. After application of the six shocks, determine compliance with the applicable standards of paragraph 3.0, "Minimum Performance Standards under Environmental Test Conditions" of the appropriate FAA airborne electronic equipment Minimum Performance Standards.

NOTE: During this test, an equivalent weight may be substituted for the electrical and mechanical components normally mounted within or on the equipment case. Such equivalent weight shall approximate the weight of the components which it replaces and shall be so *located that the center of gravity of the equipment is* essentially unchanged. The equivalent weight shall not contribute to the strength of the equipment case or its mounting fastenings to a greater extent than the components it replaces.

7.0 ***Vibration Test.***

7.1 ***Test Procedure.***

a. So secure the equipment under test to a vibration table that sinusoidal vibratory motion is exerted parallel to the longitudinal[4] axis of the equipment. The equipment shall be affixed to the vibration table by the means specified by the equipment manufacturer for service installations. Connect the equipment for proper operation. Start it operating in its principal mode. (Multipurpose equipments, such as transceivers, shall be tested in all modes.)

b. With the equipment operating, vary the vibration frequency from 10 to 55 to 10 c.p.s. in a time period of from one to three minutes [5] at an amplitude appropriate to the category of equipment under test. (Refer to Table 2). Continue vibrating the equipment in this *manner for a period of at least ninety (90) minutes.*

c. Determine compliance with the applicable standards of paragraph 3.0 "Minimum Performance Standards under Environmental Test Conditions" of the appropriate FAA airborne electronic equipment Minimum Performance Standards.

d. Repeat the procedures specified in paragraphs 7.1 *a.*, *b.*, and *c.*, with the vibratory motion applied in a direction parallel to the lateral axis of the equipment.

e. Repeat the procedures specified in paragraphs 7.1 *a.*, *b.*, and *c.*, with the vibratory motion applied in a direction parallel to the vertical axis of the equipment.

f. If the equipment is to be tested under a vibration category which requires vibration tests in the 55 to 500 cycle frequency range, repeat all of the above test procedures, but starting at 55 cycles and running to 500 cycles and returning to 55 cycles with the excursion so adjusted for each frequency as to produce the constant acceleration figure specified in Table 2.[6]

TABLE 2. CATEGORIZATION OF AIRCRAFT VIBRATION CHARACTERISTICS BY AIRCRAFT TYPES AND LOCATIONS THEREIN

AIRCRAFT DESCRIPTION	FUSELAGE	INSTRUMENT PANELS (VIBRATION PROTECTED OR OTHERWISE) AND ISOLATED RACKS	ANY LOCATION NOT SPECIFIED
Rotary wing aircraft	A	F	A
Turbo engine fixed wing aircraft	B	C	A
Piston engine fixed wing aircraft, heavy multi-engine type (Over 12,500 lbs.)	E	F	D
Piston engine fixed wing aircraft, light multi-engine type (Under 12,500 lbs.)	F	F	E
Piston engine fixed wing aircraft, light single engine type (Under 12,500 lbs.)	F	F	F

[4] Optionally, vibratory motion may be first applied to any axis of the equipment, i.e., lateral, vertical or longitudinal. Any sequence thereafter is permissible.

[5] Either a linear or logarithmic sweep (scan) may be used.

[6] Optionally, the tests specified in paragraphs 7.1 *a.*, *b.*, *c.*, *d.*, *e.*, and *f.*, may be combined, if desired, with a total sweep time of from 2 to 6 minutes and a total time of 180 minutes.

7.2 ***Vibration Characteristics of Categories:***

Category A—Constant total excursion of 0.030" from 10 to 55 c.p.s. with a maximum acceleration of 5G: and Constant acceleration of 5G from 55 to 500 c.p.s.

Category B—Constant total excursion of 0.020" from 10 to 55 c.p.s. with a maximum acceleration of 3G: and Constant acceleration of 1.5G from 55 to 500 c.p.s.

Category C—Constant total excursion of 0.010" from 10 to 55 c.p.s. with a maximum acceleration of 1.5G: and Constant acceleration of 0.25G from 55 to 500 c.p.s.

Category D—Constant total excursion of 0.030" from 10 to 55 c.p.s. with a maximum acceleration of 5G.

Category E—Constant total excursion of 0.020" from 10 to 55 c.p.s. with a maximum acceleration of 3G.

Category F—Constant total excursion of 0.010" from 10 to 55 c.p.s. with a maximum acceleration of 1.5G.

8.0 ***Temperature Variation Test.*** Stabilize the equipment temperature at the appropriate Operating Low Temperature specified in Table 1, at ambient room atmospheric pressure with the equipment not operating.[7] Operate the equipment at maximum duty cycle for a period of 15 minutes, beginning with "ON" cycle in the case of equipment designed for intermittent duty service, with the voltage and frequency of the primary power source adjusted to standard values. Increase the temperature of the air in the test chamber to the Operating High Temperature specified in Table 1, at a rate [8] not exceeding 1° C. per minute. In the interval between the time that the equipment temperature stabilizes at the appropriate Operating Low Temperature and the time it stabilizes at the appropriate Operating High Temperature, determine compliance with the applicable standards of paragraph 3.0, "Minimum Performance Standards under Environmental Test Conditions" of the appropriate FAA Airborne Electronic Equipment Minimum Performance Standards.

8.1 ***Alternate Test Procedure.*** It is permissible to combine the temperature variation test and the temperature-altitude test. In this case, proceed as follows:

(1) Conduct that portion of the temperature-altitude test specified in paragraph 4.1.

(2) Increase the temperature of the air in the test Chamber to the High Operating Temperature specified in the applicable category of Table 1 at a rate [8] not exceeding 1° C. per minute. In the interval between the time that the equipment temperature stabilizes at the appropriate Low Operating Temperature and the time it stabilizes at the appropriate High Extended-time Operation Temperature, determine compliance with the applicable standards of paragraph 3.0, "Minimum Performance Standards under Environmental Test Conditions", of the appropriate FAA Airborne Electronic Equipment Minimum Performance Standards.

(3) Conduct those portions of the Temperature-Altitude Test specified in paragraphs 4.2*a*. through 4.3*b*.

9.0 ***Power Input Test.***

[7] The purpose of this test is to determine certain performance characteristics of the equipment at various temperatures between the Operating Low Temperature and the Extended-time Operation High Temperature specified in the applicable Category of Table 1.

[8] If desired, this rate may, if necessary, be reduced to zero to permit measurements to be taken.

[8] If desired, this rate may, if necessary, be reduced to zero to permit measurements to be taken.

9.1 ***Power Input Variation Test.***

a. Adjust the primary power input as follows:

(1) In the case of equipment designed to operate from a d.c. power source, adjust the primary power voltage to 110% of the design voltage.

(2) In the case of equipment designed to operate from a.c. primary power sources of essentially constant frequency, such as 400 c.p.s. adjust the primary power voltage to 110% of the design voltage and the frequency to 105% of design frequency. The crest factor shall be 1.4, ±10%.

(3) In the case of equipment designed to operate from a.c. primary power sources of variable frequency, such as 300 to 1,000 c.p.s., adjust the primary power voltage to 110% of design voltage and the frequency to the highest for which the equipment is designed. The crest factor shall be 1.4, ±10%.

NOTE: For the purposes of this test, equipment which derives a.c. power from an inverter provided exclusively for the equipment shall be considered as d.c. operated.

b. Operate the equipment at maximum duty cycle for 30 minutes, with the primary power adjusted as specified in paragraph 9.1*a*. Determine compliance with the applicable standards of paragraph 3.0, "Minimum Performance Standards under Environmental Test Conditions", of the appropriate FAA airborne electronic equipment Minimum Performance Standards during this 30-minute period.

c. Adjust the primary power input as follows:

(1) In the case of equipment designed to operate from a d.c. power source, adjust the primary power voltage to 90% of the design voltage.

(2) In the case of equipment designed to operate from a.c. primary power sources of essentially constant frequency, such as 400 c.p.s., adjust the primary power voltage to 90% of the design voltage and the frequency to no higher than 95% of design frequency. The crest factor shall be 1.4 ±10%.

(3) In the case of equipment designed to operate from a.c. primary power sources of variable frequency, such as 300 to 1,000 c.p.s., adjust the primary power voltage to 90% of design voltage and the frequency to the lowest for which the equipment is designed. The crest factor shall be 1.4 ±10%.

NOTE: For the purposes of this test, equipment which derives a.c. power from an inverter provided exclusively for the equipment shall be considered as d.c. operated.

d. Operate the equipment at maximum duty cycle for a period of 30 minutes with the primary power adjusted as specified in paragraph 9.1*c*. Determine compliance with the applicable standards of paragraph 3.0 "Minimum Performance Standards under Environmental Test Conditions" of the appropriate FAA airborne electronic equipment Minimum Performance Standards during this 30 minute period.

9.2 ***Low Voltage Test.***

a. A.C. and D.C. Equipments. Operate the equipment at maximum duty cycle for a period of at least 30 minutes at an input power voltage(s) 80% of standard test voltage(s) in the case of d.c. equipment, or 87½% of standard test voltage(s) in the case of a.c. equipment. During this period, determine compliance with the applicable standards of paragraph 3.0, "Minimum Performance Standards under Environmental Test Conditions", of the

appropriate FAA Airborne Electronic Minimum Performance Standards.

b. D.C. Equipments.

(1) With the equipment operating, decrease the input power voltage(s) from 80% of standard test voltage(s) to 50% of standard test voltage(s) at a rate not greater than 2% of the standard test voltage(s) per minute and continue operating the equipment for a period of at least 10 minutes at the 50% input power level. With the equipment still operating, adjust the input power voltage(s) to 100% of standard test voltage(s) and determine compliance with the applicable standards of paragraph 3.0, "Minimum Performance Standards under Environmental Test Conditions", of the appropriate FAA Airborne Electronic Minimum Performance Standards.[10]

(2) With the equipment operating, reduce the input power voltage(s) from 100% to 50% of standard test voltage(s) and continue the reduction of the input power voltage(s) from the 50% level to zero input voltage(s) at a rate not greater than 2% of the standard test voltage(s) per minute. Determine compliance with the applicable standards of paragraph 3.0 "Minimum Performance Standards under Environmental Test Conditions" of the appropriate FAA Airborne Electronic Minimum Performance Standards.[11]

NOTE: For the purposes of this test, equipment which derives a.c. power from an inverter provided exclusively for the equipment shall be considered as d.c. operated.

10.0 ***Conducted Voltage Transient Test.***

10.1 ***Intermittent Transients.*** With the equipment operating at its normal input voltage(s), apply to each of the d.c. primary input power leads a series of positive and negative voltage transients having the characteristics (amplitude and wave form) appropriate to the applicable normal d.c. input voltages specified in Figure 1, for a period of at least ten (10) seconds and at a rate of not less than two (2) transients per second. Immediately after the ten second period, determine compliance with the applicable standards of paragraph 3.0, "Minimum Performance Standards under Environmental Test Conditions", of the appropriate FAA Airborne Electronic Equipment Minimum Performance Standards. The positive and negative transients should be developed, applied and monitored in a manner similar to that shown in Figures 2 and 3.

10.2 ***Repetitive Transients.*** With the equipment operating at its normal input voltage(s), apply to each of the d.c. primary input power leads a series of positive voltage transients having the characteristics (amplitude and wave form) appropriate to the applicable normal d.c. input voltages specified in Figure 1 at a rate of not less than two (2) transients per second and, simultaneously, determine compliance with the applicable standards of paragraph 3.0, "Minimum Performance Standards under Environmental Test Conditions" of the appropriate FAA Airborne Electronic Equipment Minimum Performance Standards. The positive voltage transients should be developed, applied and monitored in a manner similar to that shown in Figure 2.[12]

11.0 ***Conducted Audio-Frequency Susceptibility Test.***

11.1 ***D.C. Input Power Leads.*** Apply a sine wave audio frequency signal in series with each ungrounded d.c. input power lead. While varying the audio frequency of the applied signal between 200 and 20,000 cycles per second, maintain the r.m.s amplitude of this signal at not less than 5% of the nominal d.c. input voltage and determine compliance with the applicable standards of paragraph 3.0, "Minimum Performance Standards Under Environmental Test Conditions" of the appropriate FAA Airborne Electronic Equipment Minimum Performance Standards. When conducting this test, all equipment interconnecting cables and RF transmission lines shall be in accordance with the manufacturer's installation wiring diagram and shall use shielded or twisted wires only where specified. Where no length of interconnecting cables is specified, the cables shall be at least five (5) feet long. Any inputs or outputs from or to other equipment(s) normally associated with the equipment under test shall be adequately simulated.

11.2 ***A.C. Input Power Leads.*** Apply a sine wave audio frequency signal in series with each ungrounded a.c. input power lead. With the frequency of this signal successively adjusted to the second harmonic of the a.c. power frequency and to each next higher order harmonic up to 9,000 cycles, maintain the r.m.s. amplitude of this signal at not less than 5% of the nominal a.c. input voltage and determine compliance with the applicable standards of paragraph 3.0 "Minimum Performance Standards Under Environmental Test Conditions" of the appropriate FAA Airborne Electronic Equipment Minimum Performance Standards. When conducting this test, all equipment interconnecting cables and RF transmission lines shall be in accordance with the manufacturer's installation wiring diagram and shall use shielded or twisted wires only where specified. Where no length of interconnecting cables is specified, the cables shall be at least five (5) feet long. Any inputs or outputs from or to other equipment(s) normally associated with the equipment under test shall be adequately simulated.

12.0 ***Audio Frequency Magnetic Field Susceptibility Test.***

12.1 ***Categories of Equipment.*** For the purpose of this test, equipment is categorized as follows:

Category A—Equipment which is intended for installation in an aircraft which has an a.c. power source having a rating of 250 VA (volt-amperes) or greater.

Category B—Equipment which is intended for installation in an aircraft which has an a.c. power source having a rating of less than 250 VA, or which has no a.c. power source whatever.

12.2 ***Test Procedure.***

Category A—Expose the equipment under test to an audio frequency magnetic field which is generated by a 400 c.p.s. current of at least 20 amperes (r.m.s.) flowing in a straight wire radiator, which is within 12 inches of the periphery of the unit of equipment under test, and deter-

[10] The purpose of this test is to determine those conditions resulting from decreased voltage(s) (such as relay chatter), the presence or continuation of which would contribute to malfunctioning of the equipment at standard test voltage(s).

[11] The purpose of this test is to determine whether the reduction of the input power voltage(s) from standard test voltage(s) to zero input voltage(s) produces evidence, external to the equipment, of smoke or fire.

[12] This test applies to equipment designed to utilize d.c. primary power which is furnished by the aircraft's electrical system. Equipment designed to operate solely on a.c. primary power need not be subjected to this test.

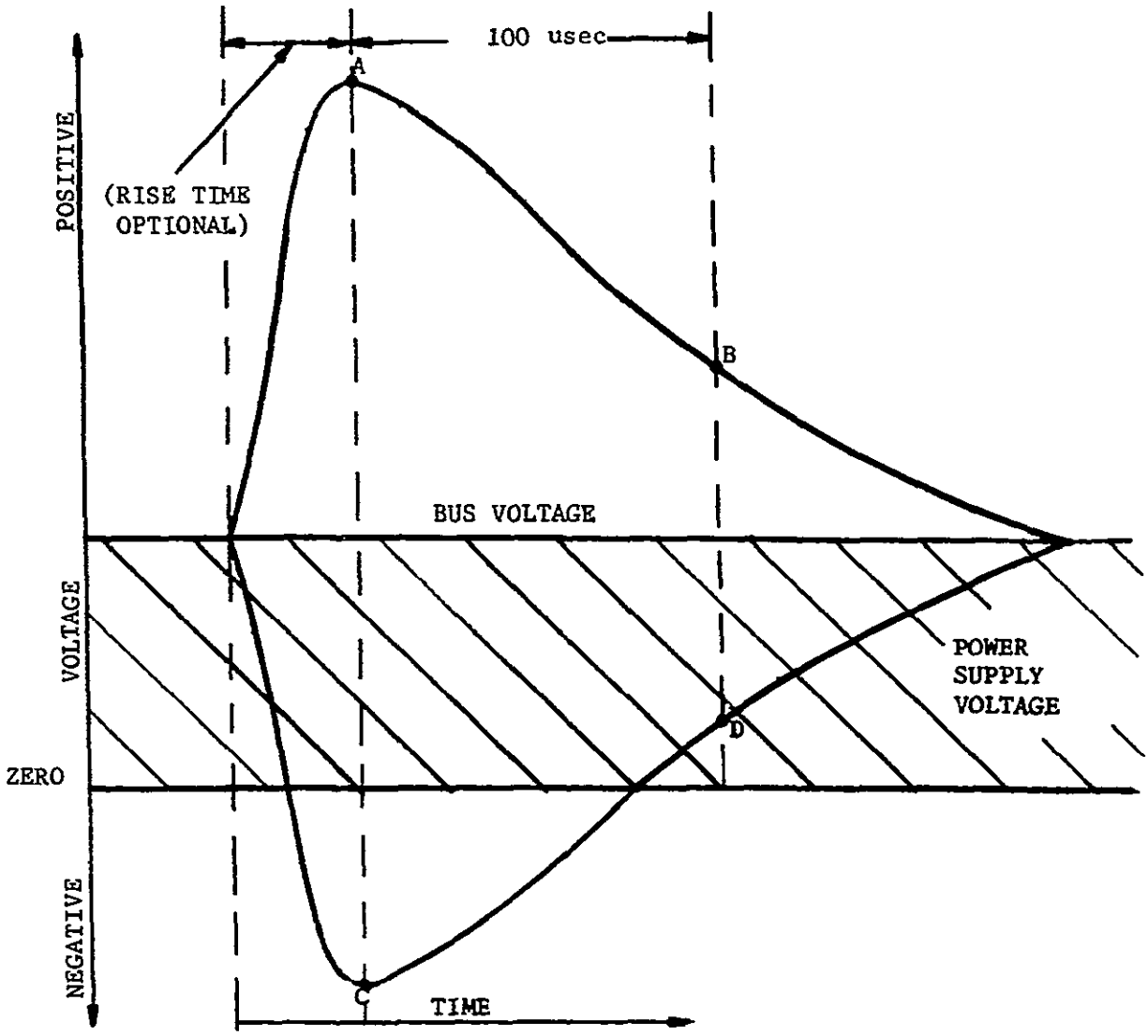

Normal Bus Voltage	Intermittent Transient Test Voltage		Repetitive Transient Test Voltage	
	Point A	Point B	Point A	Point B
28	+78	+46	+48	+35
14	+39	+23	+24	+17
	Point C	Point D		
28	-22	+10		
14	-11	+5		

FIGURE 1.—Transient voltage characteristics.

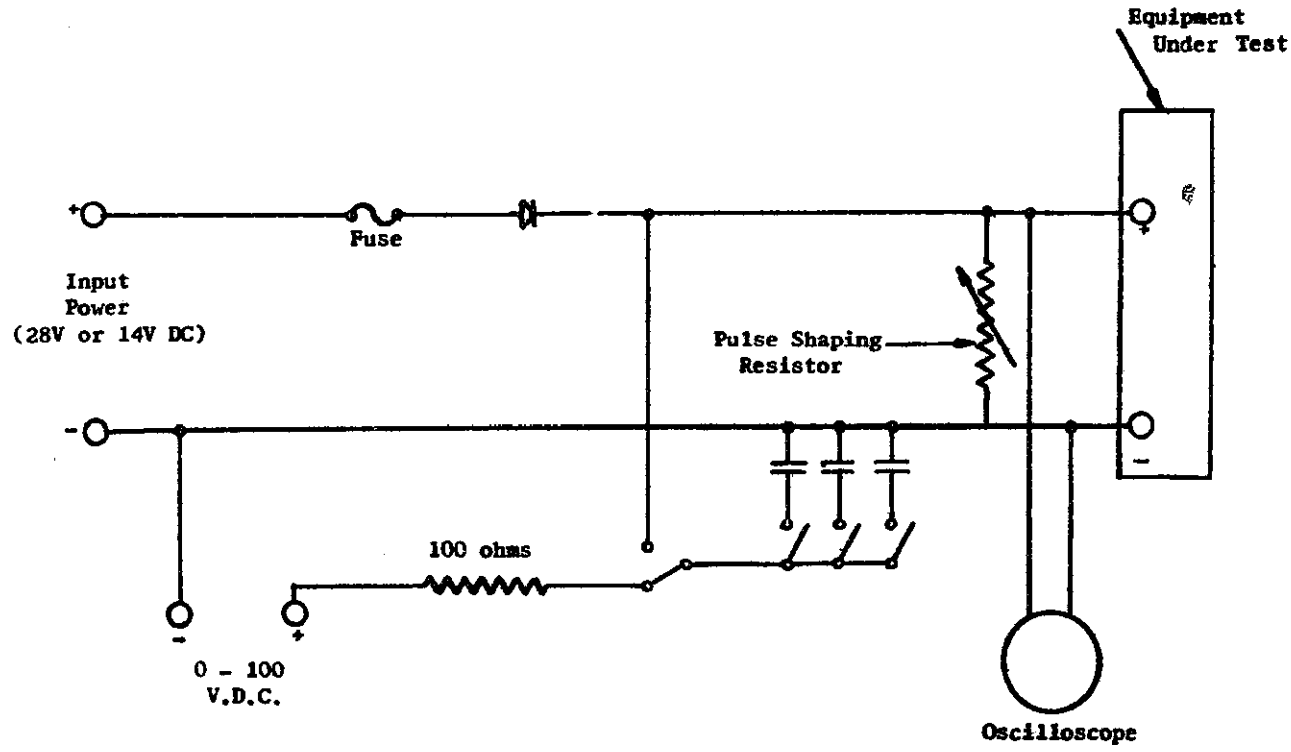

FIGURE 2.—Positive pulse generating network.

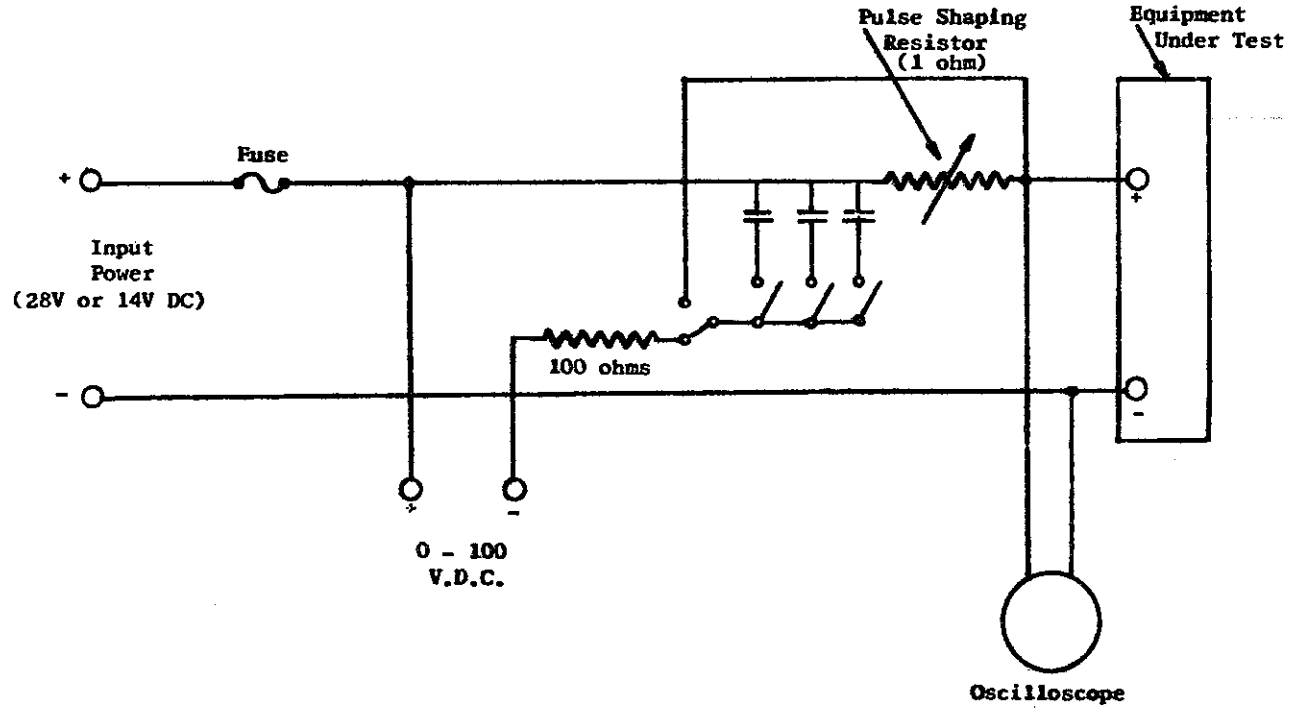

FIGURE 3.—Negative pulse generating network.

mine compliance with the applicable standards of paragraph 3.0 "Minimum Performance Standards Under Environmental Test Conditions" of the appropriate FAA Airborne Electronic Equipment Minimum Performance Standards. During this test, the radiator shall be so oriented with respect to each external surface of each unit as to cause maximum interference. The length of the radiator shall be such that it extends a distance of at least two feet (laterally) beyond the exposed surface of the unit under test. The leads supplying current to the radiator shall be routed at least two feet away from any part of the unit under test and from the radiator itself. All units of the equipment under test shall be individually tested.

Category B—No test of Category B equipment is required.

13.0 ***Radio Frequency Susceptibility Test (Radiated and Conducted).*** For the purposes of this test,[13] equipment is categorized as follows:

Category A—Equipment which is intended for installation in aircraft having a Maximum Weight of more than 12,500 pounds.

Category B—Equipment which is intended for installation in aircraft having a Maximum Weight of 12,500 pounds, or less.

13.1 ***General Requirements.***

a. The equipment under test shall be set up on a ground plane and operated in accordance with the following criteria:

(1) Ground Plane.—A copper or brass ground plane, 0.01 inch thick minimum for copper, 0.025 inch thick minimum for brass, 12-square feet or more in area with a minimum width of 30 inches, shall be used. In all cases where a shielded room is employed, the ground plane shall be bonded to the shielded room at intervals no greater than 3 feet, and at both ends of the ground plane.

(2) Shock and Vibration Isolators.—The equipment under test shall be secured to mounting bases incorporating shock or vibration isolators, if such mounting bases are specified by the equipment manufacturer. The bonding straps furnished with the mounting base shall be connected to the ground plane. Where mounting bases do not incorporate bonding straps, bonding straps shall not be used in the test setup.

(3) Bonding.—Only the provisions included in the design of the equipment and specified in the installation instructions shall be used to bond units, such as equipment case and mount, together or to the ground plane. Where bonding straps are required to complete the test setup they shall have a length not greater than 5 times the width, shall have a minimum thickness of 0.025 inch, and shall be copper or brass metal straps, not braid. Connections made with such bond straps shall have clean metal-to-metal contact.

(4) External Ground Terminal.—When an external terminal is available for a ground connection on the equipment under test, this terminal shall be connected to the ground plane if the terminal is normally grounded in the installation. If the installation conditions are unknown, the terminal shall not be grounded.

(5) Interconnecting Cables.—All equipment interconnecting cables and RF transmission lines shall be in accordance with the manufacturer's installation wiring diagram and shall use shielded or twisted wires only where specified. Where no length of interconnecting cables is specified, the cables shall be at least five (5) feet long. Any inputs or outputs from or to other equipment associated with the equipment under test shall be adequately simulated.

(6) Dummy Antennas.—The dummy antenna shall have electrical characteristics which closely simulate those of the normal antenna, and should be shielded. It shall contain electrical components which are used in the normal antenna (such as filters, crystal diodes, synchros, motors, etc.).

b. Test instruments shall be set up and operated in accordance with the following criteria:

(1) Bonding.—Interference meters used for measurement during the "conducted" test shall not be bonded to the ground plane except through the interconnecting coaxial cable. The counterpoise on rod antennas shall be bonded to the ground plane with a strap of such length that the rod antenna can be positioned correctly. The strap shall be as wide as the counterpoise.

(2) Powerline Stabilization Network.—One stabilization network shall be inserted in each ungrounded primary input power lead of the equipment under test. The network enclosure shall be bonded to the ground plane. The network shall be constructed in accordance with Figure 4. The input impedance characteristics of the stabilization network are shown in Figure 5.

(3) Antenna Orientation and Positioning in Shielded Enclosures.—The rod or dipole antenna shall be located as shown in Figures 6 or 7. The rod antenna shall be so placed that the antenna is in a vertical position. The rod antenna shall be located at the point where maximum radiation pickup is obtained when it is moved along a line parallel with the edge of the ground plane. Those measurements which use a resonate dipole antenna shall have the dipole positioned parallel with the edge of the ground plane. The dipole antenna shall be centered 12 inches ± 1 inch above the level of the ground plane. The rod or the dipole antenna shall be located at the distance from the equipment under test specified in Figures 6 and 7. When the dimensions of the dipole antenna become smaller than the test layout, the antenna shall be moved parallel to the edge of the ground plane to keep its sensitive elements adjacent to the point of maximum radiation. At frequencies from 25 up to and including 35 megacycles, the measurements shall be taken with the dipole antenna adjusted to resonance at 35 megacycles. The dipole antenna shall be adjusted to resonance at all frequencies above 35 megacycles. In screen room tests, the antennas shall be at least 1 foot away from any wall.

13.2 ***Conducted Radio Frequency Susceptibility Test.*** With the equipment under test arranged in a manner similar to that shown in Figure 8 apply through the powerline stabilization network an RF signal modulated 30% at 1,000 c.p.s. between each ungrounded primary input power lead and ground. Determine compliance with the applicable standards of paragraph 3.0 "Minimum Performance Standards under Environmental Test Conditions" of the appropriate FAA Airborne Electronic Equip-

[13] See "Introduction" of Appendix A for information on the relationship between the emission of spurious radio frequency energy from electrical and electronic equipment installed in an aircraft and the levels of radio frequency susceptibility signals used in this test procedure

ment Minimum Performance Standards when the signal level is varied (versus frequency) over the range specified in Figure 9 or Figure 10 for Category A and Category B installations, respectively. The output impedance of the signal generator shall be 50 ohms. The voltages specified shall be those which exist across the 50 ohm signal generator output when no load is connected to the signal generator. All equipment interconnecting cables shall have 4 feet of their length bundled together and supported 2 inches above the ground plane, as shown in Figure 8.

13.3 ***Radiated Radio Frequency Susceptibility Test.*** Expose the equipment under test to a radio frequency field, the levels of which (versus frequency) are specified in Figures 11 and 12 for Category A and Category B installations, respectively. The voltages specified in Figures 11 and 12 are those existing across the radiating antenna terminals. The test signal shall be modulated 30% at 1,000 c.p.s. The type of radiating antenna to be employed is related to the frequency of the test signal as follows:

Frequency	*Type of Antenna*
90 kc. to 25 mc.	41 inch rod antenna
25 mc. to 35 mc.	Dipole antenna adjusted to resonance at 35 mc.
35 mc. to 1,000 mc.	Dipole antenna adjusted to resonance at test frequency

Care should be taken to use matching networks when required. The equipment under test, the radiating antenna and the line stabilization networks shall be arranged in accordance with Figure 6, when using the rod antenna, and Figure 7, when using the dipole antenna. During this test, determine compliance with the applicable standards of paragraph 3.0 "Minimum Performance Standards under Environmental Test Conditions" of the appropriate FAA Airborne Electronic Equipment Minimum Performance Standards.

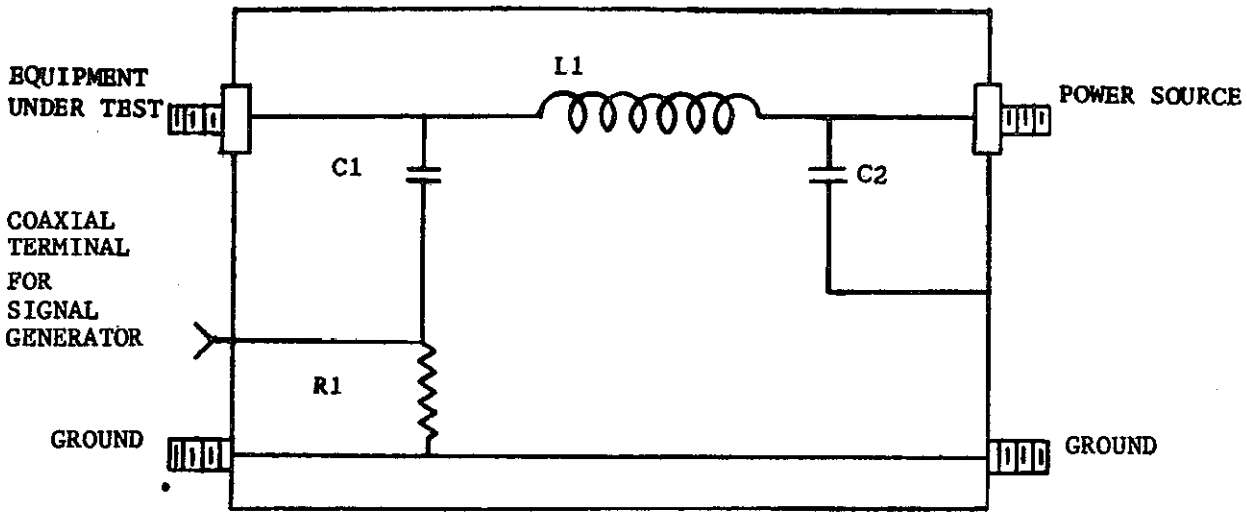

FIGURE 4.—Powerline stabilization network schematic diagram.

ENCLOSURE DATA: 14 GAGE (B & S) ALUMINUM SUGGESTED SIZE 9⅜ IN. BY 4 BY 4 IN.
FORM DATA: 5¼ IN. LENGTH, 3 IN. DIA (OD), .125 IN. WALL DRILL ⅜ IN. HOLE 7/16 IN. FROM EACH END.
COIL DATA: L1=5 MICROHENRIES, 13 TURNS SINGLE LAYER, 4 IN. WINDING LENGTH.
WIRE DATA: AWG 6, 600 VOLT, .310 IN. DIA (OD). (FOR 50 AMPERE NETWORK.)
CAPACITOR: C1 SHALL BE MOUNTED ON 1 IN. INSULATING BLOCK ABOVE GROUND.
CAPACITOR DATA: C1=.1 UF, 600-VOLT DC, BATHTUB.
C2=1 UF, 600-VOLT DC, BATHTUB, SINGLE TERMINAL CASE MOUNTED ON GROUND.
RESISTOR DATA: R1=5,000-OHM, 5-WATT CARBON.

1. The values given for the component parts of the network are nominal. Regardless of the construction or deviation from nominal values, the network must have an impedance within 20 percent of that given in Figure 5.
2. Connecting leads to condensers and resistors should be as nearly as possible to zero length.
3. Networks may also be constructed having a 1-ohm series resistor between the line and capacitor C2. This 1-ohm resistor shall be made up from ten 10-ohm, 1-watt composition resistors.
4. The data given in this figure is suitable for the construction of 50-ampere networks. Other current-carrying networks may be constructed by changing the wire size given for the coil and the size of the over-all enclosure.
5. The 50-ohm transmission line should be extended within the enclosure right up to the location where it connects with capacitor C1.

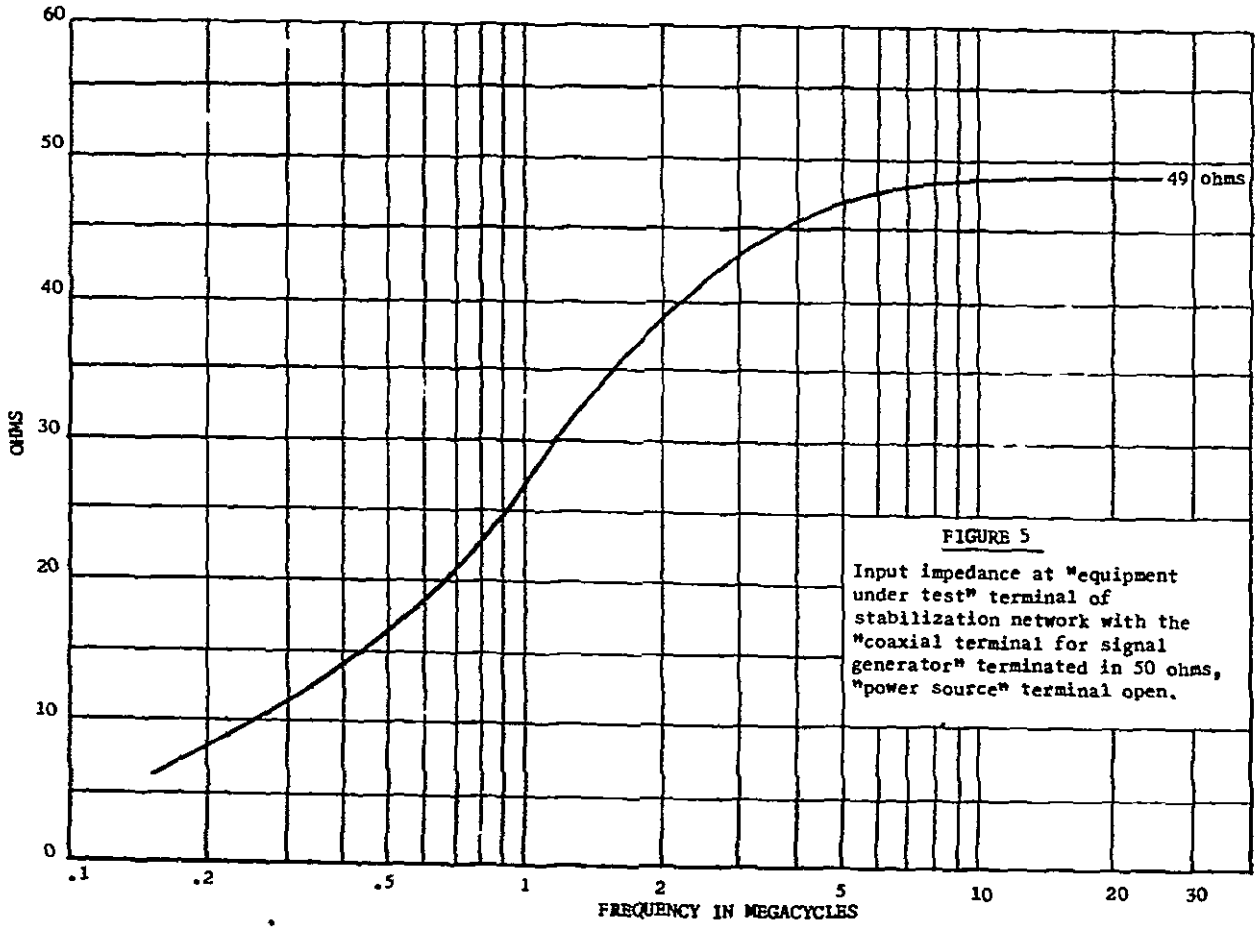

FIGURE 5

Input impedance at "equipment under test" terminal of stabilization network with the "coaxial terminal for signal generator" terminated in 50 ohms, "power source" terminal open.

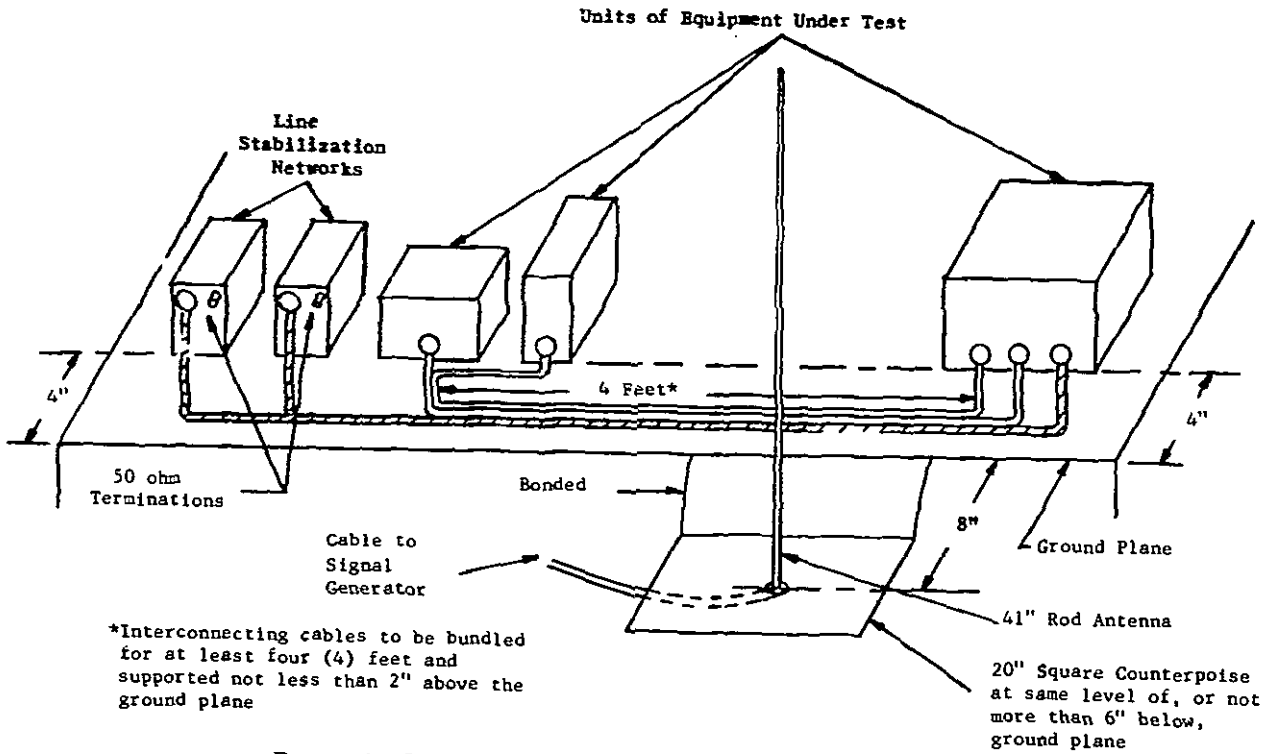

FIGURE 6.—Location of rod antenna and arrangement of equipment.

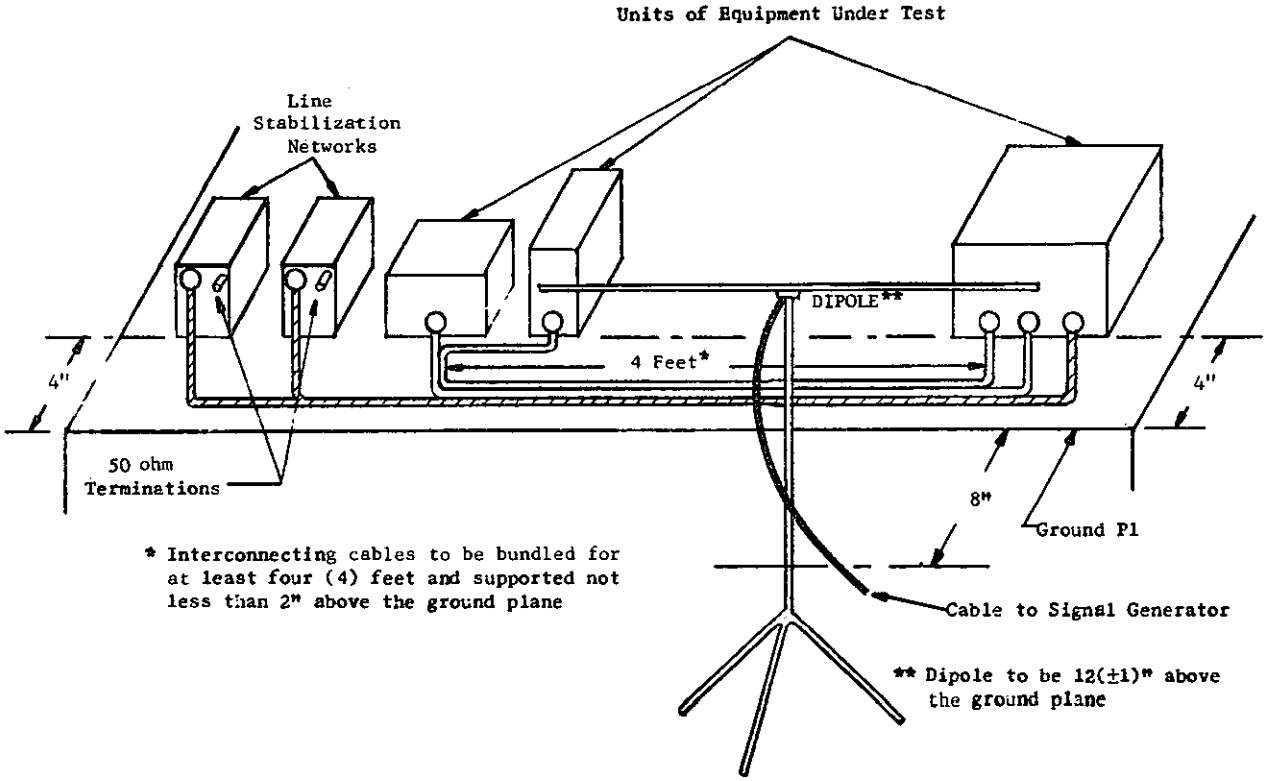

FIGURE 7.—Location of dipole antenna and arrangement of equipment.

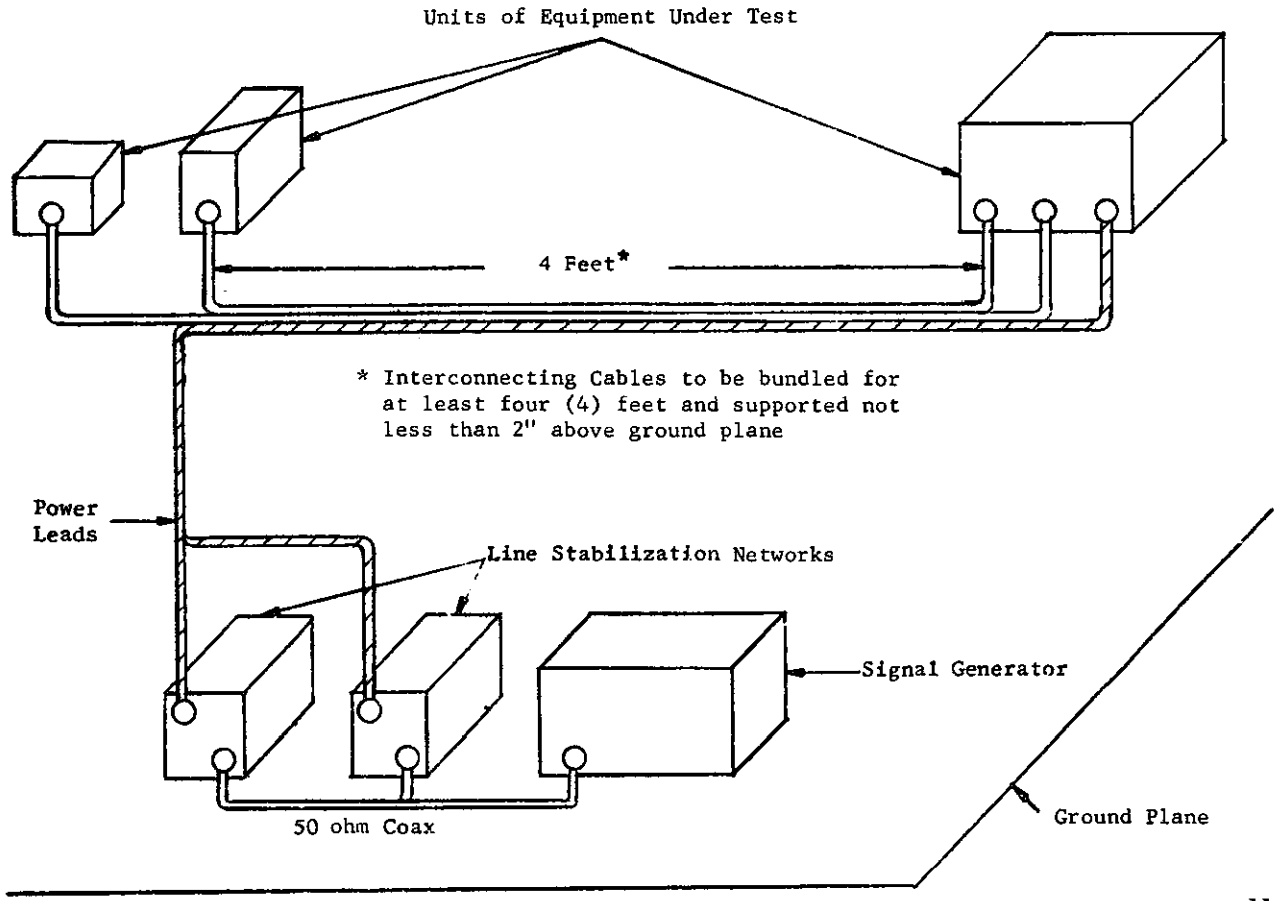

FIGURE 8.—Arrangement of equipment for conducted RF susceptibility test.

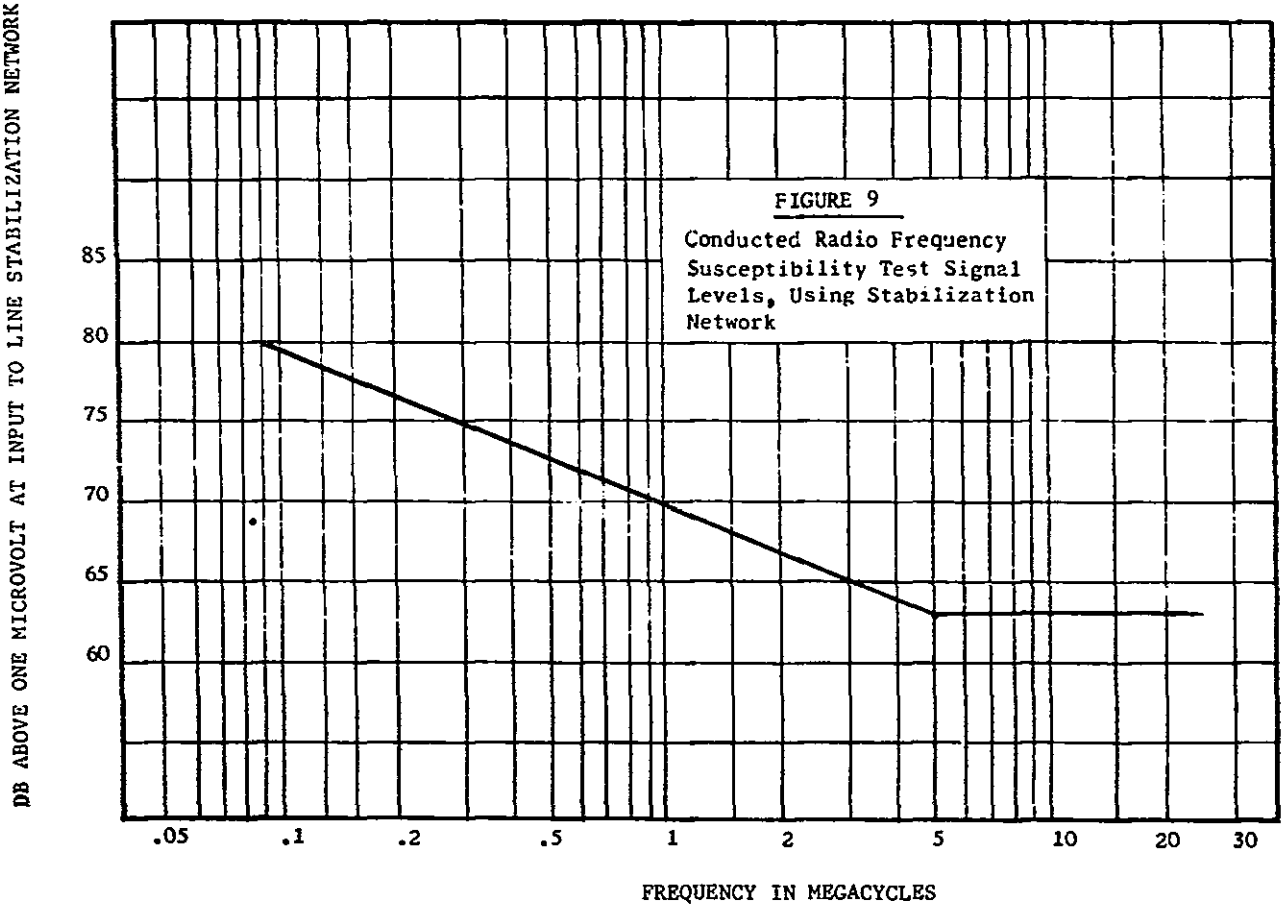

FIGURE 9

Conducted Radio Frequency Susceptibility Test Signal Levels, Using Stabilization Network

14.0 ***Explosion Test.***

14.1 ***Application and Conditions of Test.***

a. Application and Categories of Equipment.

(1) It is recognized that installation practices in civil aircraft and in many non-civil transport aircraft normally do not require the installation of equipment in locations where an explosive atmosphere may exist in the course of normal aircraft operations. For such installations, the Explosion Test is not applicable and the equipment is designated as Categoty "X" equipment.

(2) It is also recognized that, in special applications and in special purpose aircraft, equipment may be installed in locations where an explosive atmosphere may exist in the course of normal aircraft operations. For these installations, the Explosion Test is applicable and the equipment is designated as Category "E" equipment.

b. Apparatus. The test chamber shall be a type capable of providing the test environment. A suitable test chamber is described in Military Specification MIL-C-9435.

c. Fuel. The fuel used shall be 100 130 octane gasoline.

d. Failure Criteria. It the equipment causes explosion at any of the test altitudes, it shall be considered to have failed to pass the test and no further trials need be attempted.

e. Applicability Exceptions. Sealed equipment, connecting wires, and cables shall be considered explosion-proof and require no test.

f. General Conditions.

(1) When necessary, large items of electrical equipment, such as motors, large relays, etc., shall be prepared for explosion-proof testing by drilling and tapping openings in the case for inlet and outlet connections to the fuel vapor air mixture circulating system and for mounting a spark plug. The spark plug is used only for igniting the vapor air mixture in the equipment to insure the presence of an explosive mixture inside the equipment on test. Small items of equipment such as switches, circuit breakers, etc., shall not be drilled and tapped for mounting a spark plug when it is not practicable.

(2) When the explosion-proof test of paragraph 14.2*a*.(2) is being performed, dust or other auxiliary covers not intended to be explosion-proof may be removed or loosened to facilitate penetration of the explosive mixture.

14.2 ***Test Procedures.***

a. Procedure I. This procedure is designed to determine the explosion producing characteristics of equipment not provided with cases designed to prevent flame or explosion propagation.[14]

[14] See additional test procedure under paragraph 14.2*b*.

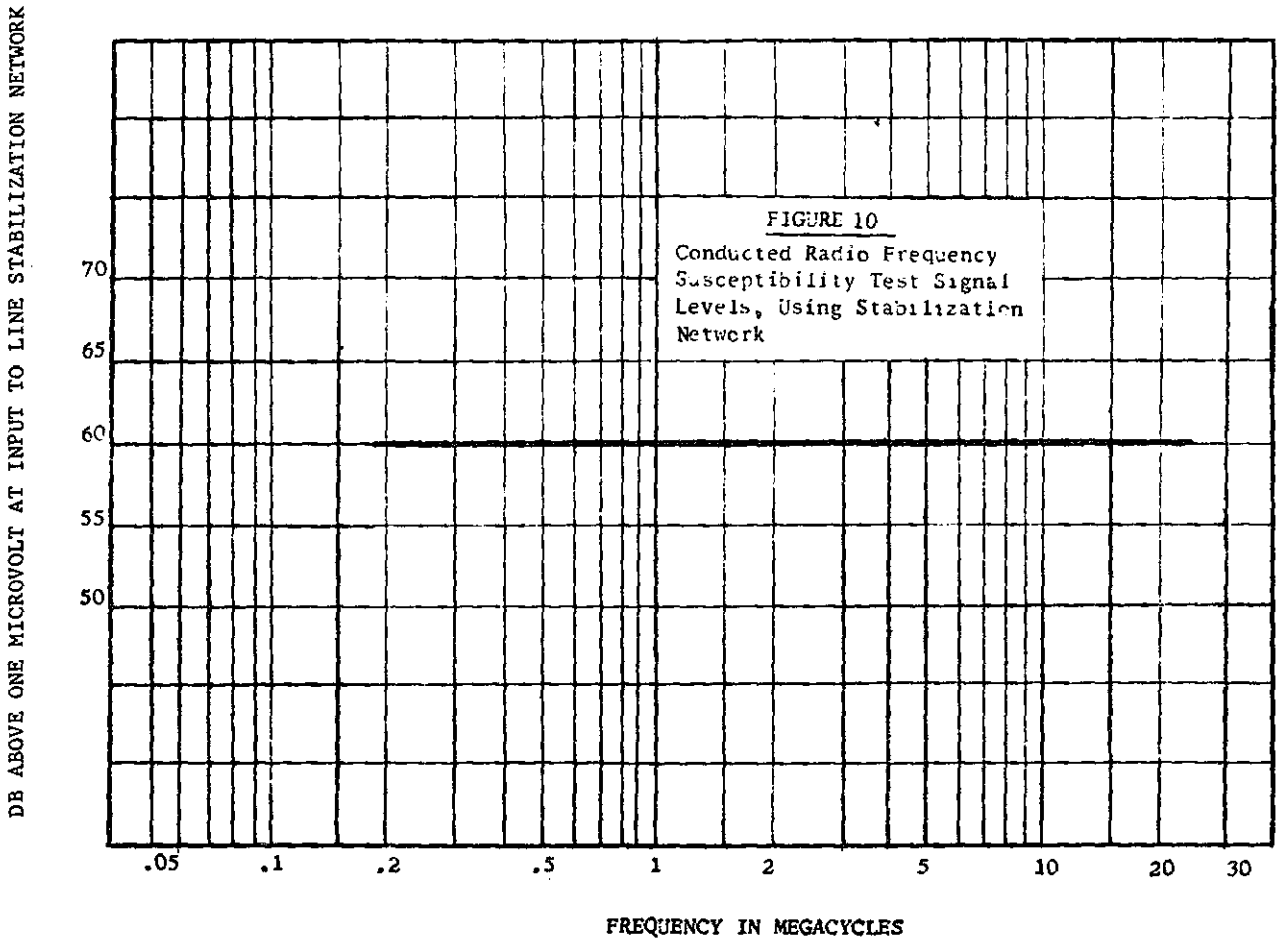

FIGURE 10
Conducted Radio Frequency Susceptibility Test Signal Levels, Using Stabilization Network

(1) Preparation for Test.

(*a*) The equipment shall be installed in the test chamber in such a manner that normal electrical operation is possible and that mechanical controls may be operated through the pressure seals from the exterior of the chamber. All external covers of the equipment shall be removed or opened to insure adequate circulation of the explosive mixture. Large equipment, comprising multiple units, may be tested one or more units at a time by extending electrical connections through the cable port to units located externally.

(*b*) The equipment shall be operated to determine that it is functioning properly and to observe the location of any sparking or high temperature components which may constitute potential explosion hazards.

(*c*) Mechanical loads on drive assemblies and servomechanical and electrical loads on switches and relays may be simulated when necessary, if proper precaution is given to duplicating the normal load in respect to torque, voltage, current, inductive reactance, etc. In all instances, it is preferable to operate the equipment as it normally functions in the system during service use.

(2) Test Procedure. The test shall be conducted at test altitudes of ground level to 5,000 feet, 20,000 feet, and 40,000 feet, except that the highest test altitude shall not exceed the design requirement of the equipment.

(*a*) The test chamber shall be sealed and the ambient temperature within shall be raised to $+71 \pm 3°$ C., or to the maximum temperature for which the equipment is designed to operate (if lower than 71° C.). The temperature of the test item and the chamber walls shall be permitted to rise to within 11° C. of that of the chamber ambient air, prior to introduction of the explosive mixture.

(*b*) The internal test chamber pressure shall be reduced sufficiently to simulate an altitude approximately 10,000 feet above the desired test altitude. The quantity of fuel, as determined from Figure 13 shall be introduced into the chamber. A time of 3 ± 1 minutes shall be allowed for the introduction and vaporization of the fuel. Air shall be admitted into the chamber until a simulated altitude of 5,000 feet above the test altitude is attained.

(*c*) Operation of the equipment shall then be commenced, all making and breaking electrical contacts being actuated. If high temperature components are present, a warmup time of 15 minutes shall be permitted. If no explosion results, air shall be admitted into the chamber so as to steadily reduce the altitude below the desired test altitude to an elevation 5,000 feet below that altitude. The operation of the equipment shall be continuous throughout this period of altitude reduction and all making and breaking electrical contacts shall be operated as frequently as possible.

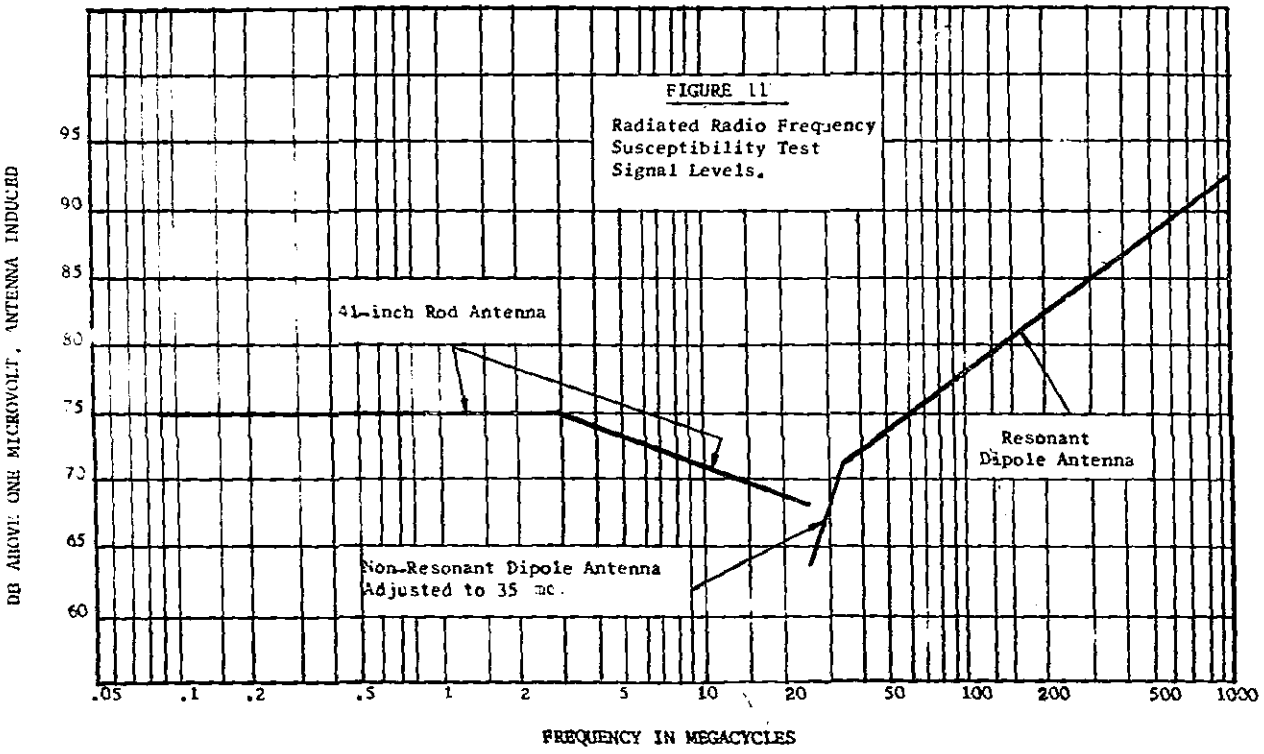
FIGURE 11
Radiated Radio Frequency Susceptibility Test Signal Levels.
DB ABOVE ONE MICROVOLT, ANTENNA INDUCED
95
90
85
80
75
70
65
60
41-inch Rod Antenna
Resonant Dipole Antenna
Non-Resonant Dipole Antenna Adjusted to 35 mc.
.05
.1
.2
.5
1
2
5
10
20
50
100
200
500
1000
FREQUENCY IN MEGACYCLES

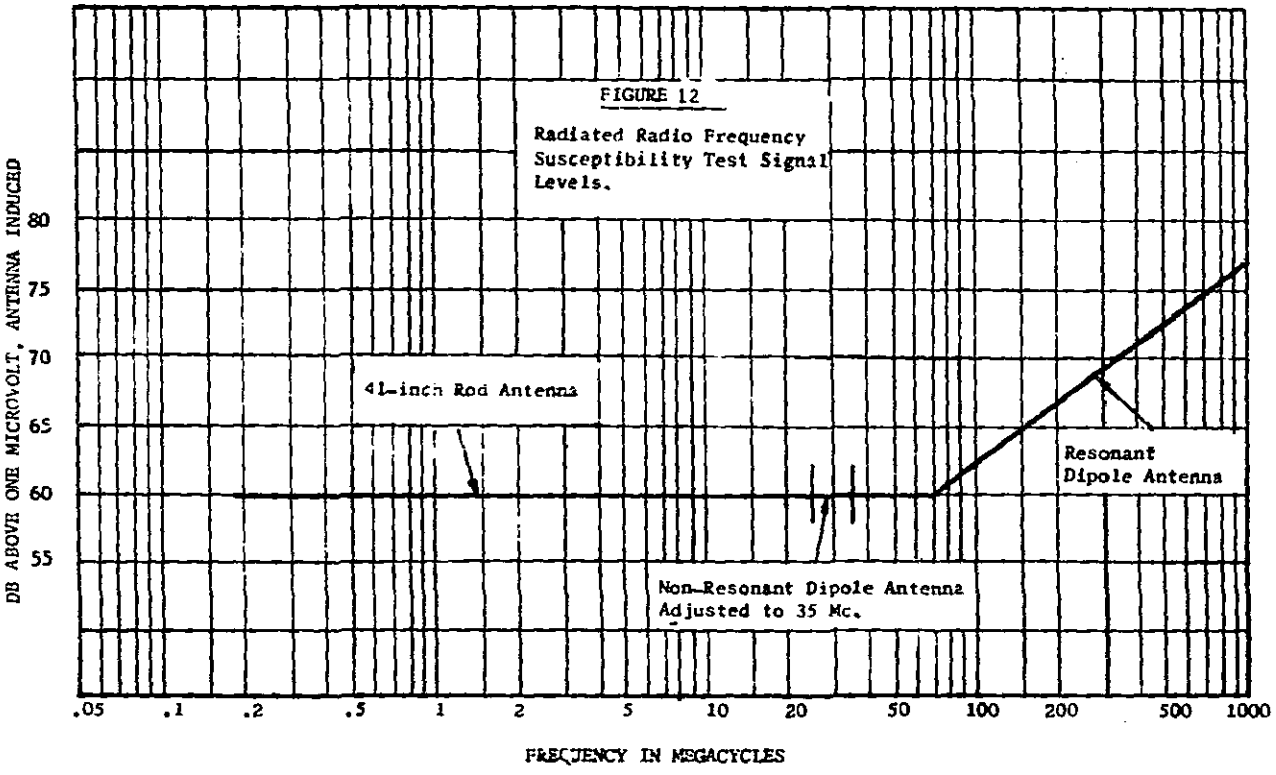
FIGURE 12
Radiated Radio Frequency Susceptibility Test Signal Levels.
DB ABOVE ONE MICROVOLT, ANTENNA INDUCED
80
75
70
65
60
55
41-inch Rod Antenna
Resonant Dipole Antenna
Non-Resonant Dipole Antenna Adjusted to 35 Mc.
.05
.1
.2
.5
1
2
5
10
20
50
100
200
500
1000
FREQUENCY IN MEGACYCLES

(*d*) If by the time the simulated altitude has been reduced to 5,000 feet below the test altitude, no explosion has occurred as a result of operation of the equipment, the potential explosiveness of the air-vapor mixture shall be verified by attempting to ignite the mixture with the igniter furnished with the chamber. If the air-vapor mixture is not found to be explosive, the test shall be considered void and the entire procedure repeated.

b. Procedure II. This procedure is designed to determine the flame and explosion arresting characteristics of equipment cases which are designed to prevent the propagation of internal case explosions.[15]

(1) Preparation for Test.

(*a*) The case, with the equipment in position within, shall be installed in the explosion chamber. Testing shall be accomplished without consideration of the equipment operating characteristics; accordingly, the equipment need not be operated. Adequate circulation of the explosive mixture throughout the case shall be provided by optional means.

(*b*) If it is necessary to drill the case for insertion of a hose from a blower, adequate precaution shall be taken to prevent ignition of the explosive mixture by backfire or release of pressure through the supply hose. The case volume shall not be altered by more than ±5 percent by any modification to facilitate the introduction of explosive vapor.

(*c*) A positive means of igniting the explosive mixture within the case shall be provided. The case may be drilled and tapped for the spark plug or the spark plug may be mounted internally.

(2) Test Procedure. The test shall be accomplished as follows:

(*a*) The chamber shall be sealed and the internal pressure reduced sufficiently to simulate an altitude between local ground level and 5,000 feet. The ambient chamber temperature shall be at least 25° C. An explosive mixture shall be obtained within the test chamber. (See paragraph 14.2*a*.(2)(*b*).

(*b*) The internal case ignition source shall be energized, in order to cause an explosion within the case. The occurrence of an explosion within the case may be detected by use of a thermocouple inserted in the case and connected to a sensitive galvanometer outside the test

[15] See additional test procedure under paragraph 14.2*a*.

FIGURE 13

Approximate Quantity of 100/130 Octane Aviation Gasoline required per cubic foot of air for Optimum Explosion.

NOTE: The amount of fuel will vary with ambient humidity, chamber temperature, fuel temperature and atmospheric pressure. The volume occupied by the equipment must be subtracted from the volume of the chamber to determine the quantity of fuel required.

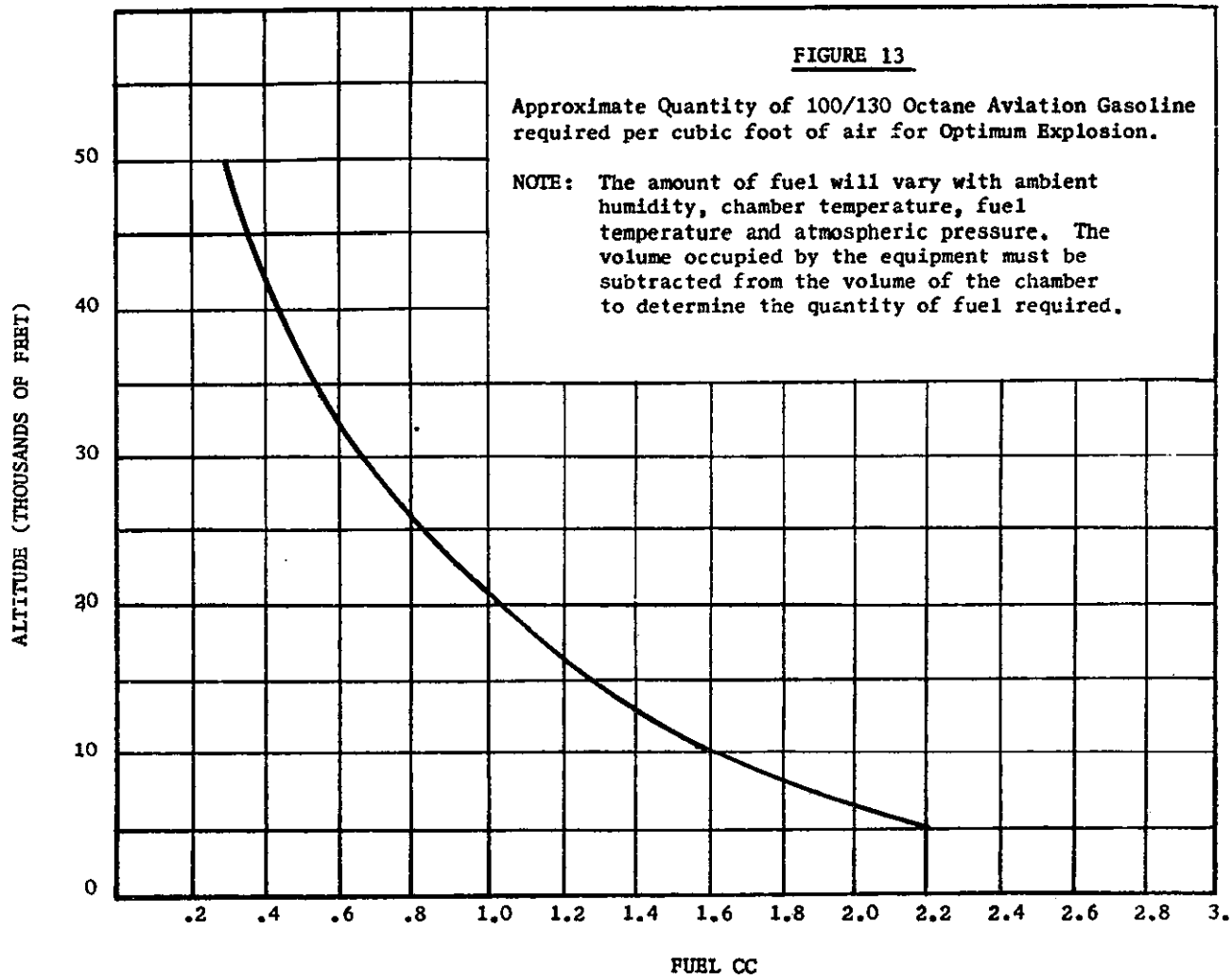

chamber. If ignition of the mixture within the case does not occur immediately, the test shall be considered void and shall be repeated with a new explosive charge.

(*c*) At least five internal case explosions shall be accomplished at the test altitude selected. If the case being tested is small (not in excess of one-fiftieth of the test chamber volume) and if the reaction within the case upon ignition is of an explosive nature without continued burning of the mixture as it circulates into the case, more than one internal case explosion but not more than five may be produced without recharging the entire chamber. Ample time must be allowed between internal case explosions for replacement of burnt gases with a fresh explosive mixture within the case. If the internal case explosions produced did not cause a main chamber explosion, the explosiveness of the fuel-air mixture in the main chamber shall be verified. If the air-vapor mixture in the main chamber is not found to be explosive, the test shall be considered void and the entire procedure repeated, using an explosive mixture.

APPENDIX A

Standards on Emission of Spurious Radio Frequency Energy (Conducted and Radiated Interference) and Associated Test Procedures

The problem of describing the gross radio frequency interference environment (RF Conducted and Radiated Susceptibility Test) in an aircraft is inseparably related to the delineation of the maximum level of spurious radio frequency energy that any one electrical or electronic equipment in that aircraft will emit. It is concluded, therefore, that if the foregoing RF Conducted and Radiated Susceptibility Tests are to achieve their intended purposes, a compatible standard on the maximum permissible level of spurious emission of radio frequency energy from any one electrical or electronic equipment in an aircraft must be applied to that equipment.

Accordingly, one of the following standards (and associated test procedure), as appropriate for the maximum weight of the aircraft in which the electrical/electronic equipment is intended to be installed must be applied to each unit of equipment incorporated in such installation

1.0 ***Standards on Emission of Spurious Radio Frequency Energy.***

a. Categories of Equipment.

Category A—Equipment intended for installation in aircraft having a Maximum Weight of more than 12,500 pounds.

Category B—Equipment intended for installation in aircraft having a Maximum Weight of 12,500 pounds, or less.

b. Conducted RF Interference. Radio interference voltages generated by the equipment within the frequency ranges and in excess of the values shown in Figures 16, 17, 18, and 19 for Categories A and B, respectively, shall not appear on any power line normally connected to an aircraft bus or other equipment.

c. Radiated RF Interference. Radiated interference fields generated by the equipment within the frequency ranges and in excess of the values shown in Figures 20, 21, 22, and 23 for Categories A and B, respectively, shall not be radiated from any unit, cable (including, but not limited to, control, pulse, i–f, video, antenna transmission and power cables) or interconnecting wiring. This requirement includes, but is not limited to, oscillator radiation, other spurious emanations and broadband interference. This does not include radiation emanating from antennas or, in the case of transmitters, any radiation on the selected frequency $\pm 50\%$ of the band of frequencies between adjacent channels.

NOTE: The emission of spurious radio-frequency energy from the equipment resulting from manual operation of switches, but not including any electrical or electromechanical operations resulting from manual operation of switches, may exceed the limits stated in paragraphs 1.0*b.* and 1.0*c.* if its duration does not exceed one second.

2.0 ***Test Procedure.***

a. Equipment Required.

(1) Interference measuring instrument.—Empire Devices Model NF–105 (including heads and antennas), or equivalent.

(2) Line stabilization networks that meet the requirements of paragraph 2.*b.*(2)(*b*).

b. General Requirements.

(1) The equipment under test shall be set up on a ground plane and operated in accordance with the following criteria:

(*a*) Ground Plane.—A copper or brass ground plane, 0.01 inch thick minimum for copper, 0.025 inch thick minimum for brass, 12-square feet or more in area with a minimum width of 30 inches, shall be used. In all cases where a shielded room is employed, the ground plane shall be bonded to the shielded room at intervals no greater than 3 feet and at both ends of the ground plane.

(*b*) Shock and Vibration Isolators.—The equipment under test shall be secured to mounting bases incorporating shock or vibration isolators, if such mounting bases are specified by the manufacturer. The bonding straps furnished with the mounting base shall be connected to the ground plane. Where mounting bases do not incorporate bonding straps, bonding straps shall not be used in the test setup.

(*c*) Bonding.—Only the provisions included in the design of the equipment and specified in the installation instructions shall be used to bond units, such as equipment case and mount, together or to the ground plane. Where bonding straps are required to complete the test setup they shall have a length not greater than 5 times the width, shall have a minimum thickness of 0.025 inch, and shall be copper or brass metal straps, not braid. Connections made with such bond straps shall have clean metal-to-metal contact.

(*d*) External Ground Terminal.—When an external terminal is available for a ground connection on the equipment under test, this terminal shall be connected to the ground plane if the terminal is normally grounded in the installation. If the installation conditions are unknown, the terminal shall not be grounded.

(*e*) Interconnecting Cables.—All equipment interconnecting cables and RF transmission lines shall be in accordance with the manufacturer's installation wiring diagram and shall use shielded or twisted wires only where specified. Where no length of interconnecting cables is specified, the cables shall be at least five (5) feet long. Any inputs or outputs from or to other equipments associated with the equipment under test shall be adequately simulated.

(*f*) Dummy Antennas.—The dummy antenna shall have electrical characteristics which closely simulate those of the normal antenna, and should be shielded. It shall contain electrical components which are used in the normal antenna (such as filters, crystal diodes, synchros, motors, etc.).

(2) Test instruments shall be set up and operated in accordance with the following criteria:

(*a*) Bonding.—Interference meters used for measurement during the "conducted" test shall not be bonded to the ground plane except through the interconnecting coaxial cable. The counterpoise on rod antennas shall be bonded to the ground plane with a strap of such length that the rod antenna can be positioned correctly. The strap shall be as wide as the counterpoise.

(*b*) Powerline Stabilization Network.—One stabilization network shall be inserted in each ungrounded primary input power lead of the equipment under test. The network enclosure shall be bonded to the ground plane. The network shall be made in accordance with Figure 14. The input impedance characteristics of the stabilization network are shown in Figure 15.

(*c*) Antenna Orientation and Positioning in Shielded Enclosures—The rod or dipole antenna shall be located as shown in Figures 25 or 26. The rod antenna shall be so placed that the antenna is in a vertical position. The rod antenna shall be located at the point where maximum radiation pickup is obtained when it is moved along a line parallel with the edge of the ground plane. Those measurements which use a resonant dipole antenna shall have the dipole positioned parallel with the edge of the ground plane. The antenna shall be centered 12 inches ± 1 inch above the level of the ground plane. The rod or the dipole antenna shall be located at the distance from the equipment under test specified in Figures 25 or 26. When the dimensions of the dipole antenna become smaller than the test layout, the antenna shall be moved parallel to the edge of the ground plane to keep its sensitive elements adjacent to the point of maximum radiation. At frequencies from 25 up to and including 35 megacycles, the measurements shall be taken with the dipole antenna

adjusted to resonance at 35 megacycles. The dipole antenna shall be adjusted to resonance at all frequencies above 35 megacycles. In screen room tests, the antennas shall be at least 1 foot away from any wall.

c. Detailed Procedure.

(1) Conducted Interference.

(*a*) Set up equipment in accordance with Figure 24.

(*b*) Search the frequency range specified for the applicable category for each equipment configuration required.

(2) Radiated Interference.

(*a*) Set up the equipment in accordance with Figure 25.

(*b*) Search the frequency range specified in the applicable category for each equipment configuration required.

(*c*) Set up the equipment in accordance with Figure 26.

(*d*) Search the frequency range specified for the applicable category for each equipment configuration required.

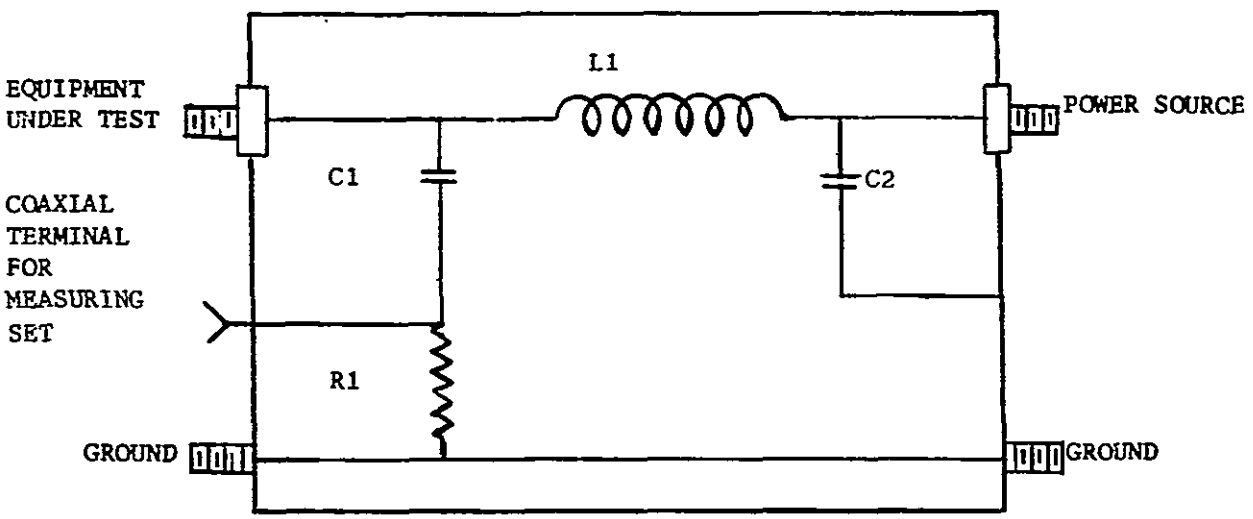

FIGURE 14.—Powerline stabilization network schematic diagram.

ENCLOSURE DATA: 14 GAGE (B & S) ALUMINUM SUGGESTED SIZE 9⅜ IN. BY 4 BY 4 IN.
FORM DATA: 5¼ IN. LENGTH, 3 IN. DIA (OD), .125 IN. WALL DRILL ⅜ IN. HOLE 7/16 IN. FROM EACH END.
COIL DATA: L1=5 MICROHENRIES, 13 TURNS SINGLE LAYER, 4 IN. WINDING LENGTH.
WIRE DATA: AWG 6, 600 VOLT, .310 IN. DIA (OD). (FOR 50-AMPERE NETWORK.)
CAPACITOR: C1 SHALL BE MOUNTED ON 1 IN. INSULATING BLOCK ABOVE GROUND.
CAPACITOR DATA: C1=.1 UF, 600-VOLT DC, BATHTUB.
C2=1 UF, 600-VOLT DC, BATHTUB, SINGLE TERMINAL CASE MOUNTED ON GROUND.
RESISTOR DATA: R1=5,000-OHM, 5-WATT CARBON.

1. The values given for the component parts of the network are nominal. Regardless of the construction or deviation from nominal values, the network must have an impedance within 20 percent of that given in Figure 15.
2. Connecting leads to condensers and resistors should be as nearly as possible to zero length.
3. Networks may also be constructed having a 1-ohm series resistor between the line and capacitor C2. This 1-ohm resistor shall be made up from ten 10-ohm, 1-watt composition resistors.
4. The data given in this figure is suitable for the construction of 50-ampere networks. Other current-carrying networks may be constructed by changing the wire size given for the coil and the size of the over-all enclosure.
5. The 50-ohm transmission line should be extended within the enclosure right up to the location where it connects with capacitor C1.

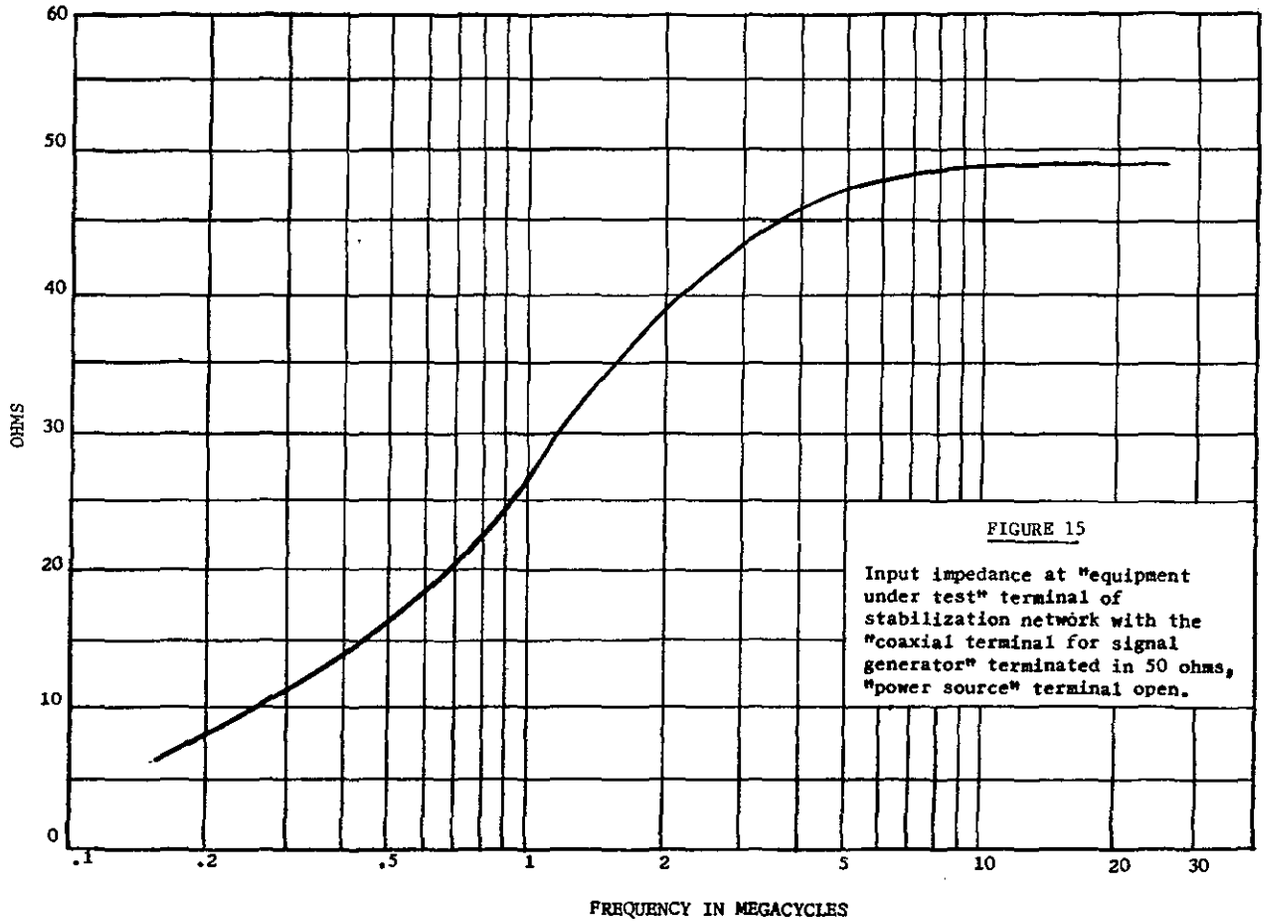

FIGURE 15

Input impedance at "equipment under test" terminal of stabilization network with the "coaxial terminal for signal generator" terminated in 50 ohms, "power source" terminal open.

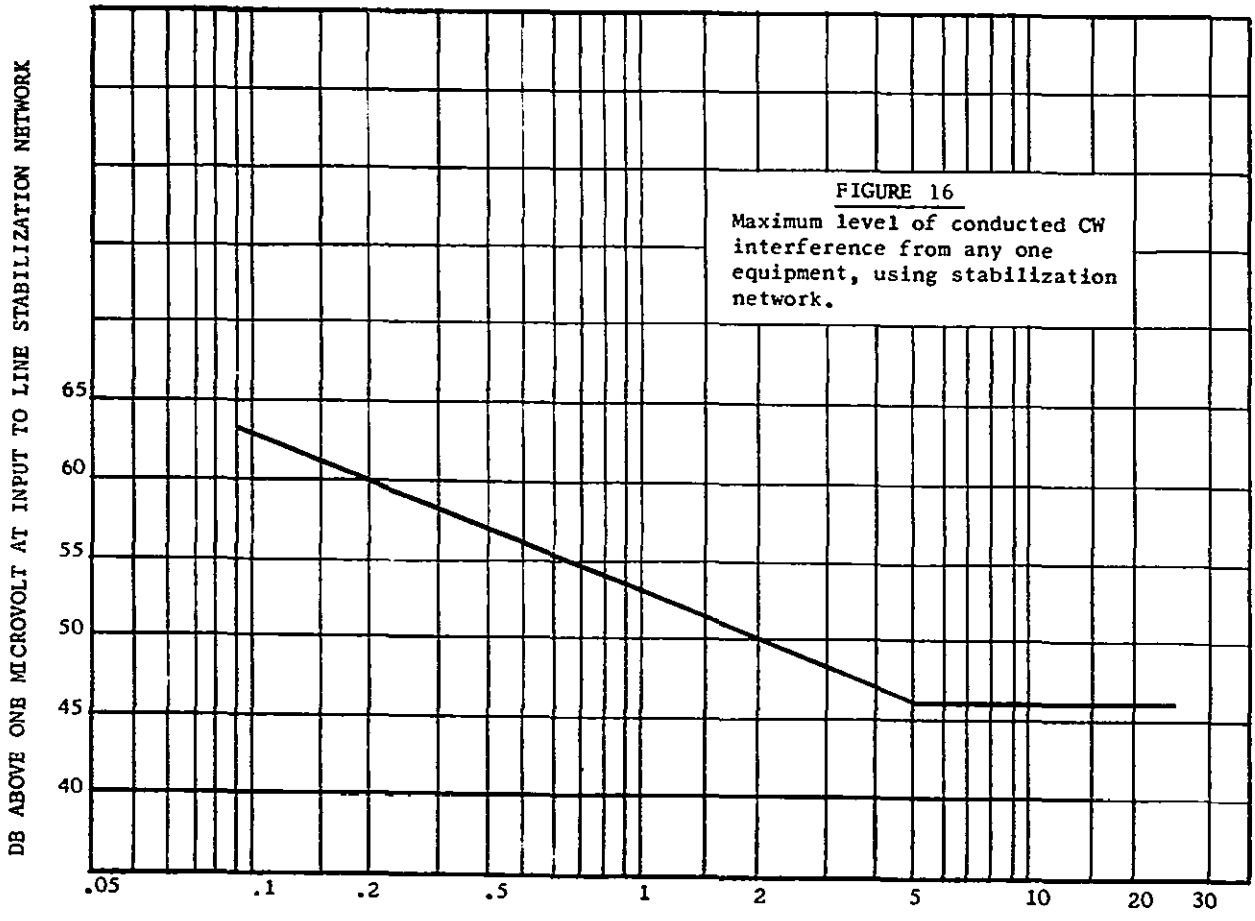

FIGURE 16

Maximum level of conducted CW interference from any one equipment, using stabilization network.

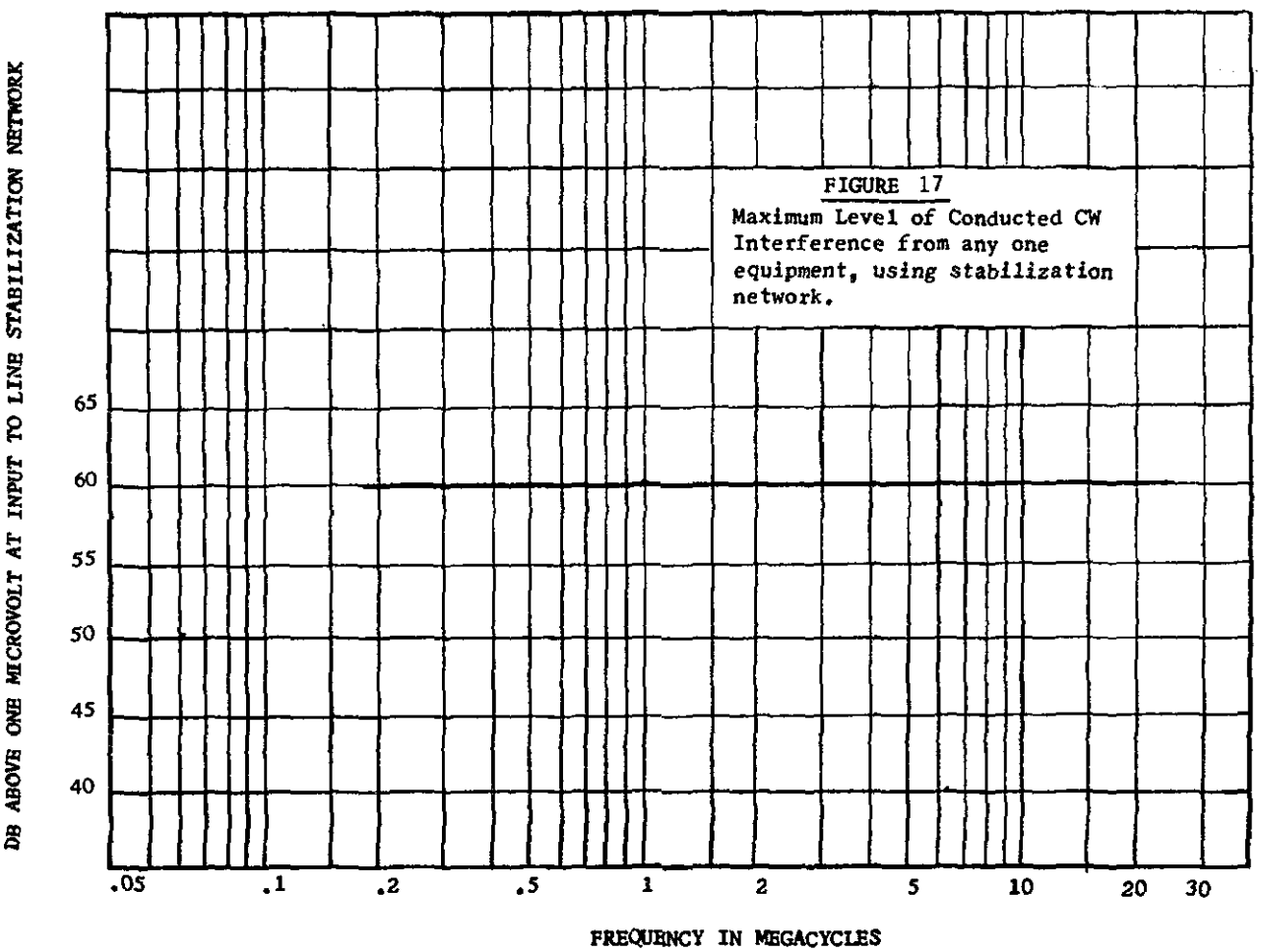

FIGURE 17

Maximum Level of Conducted CW Interference from any one equipment, using stabilization network.

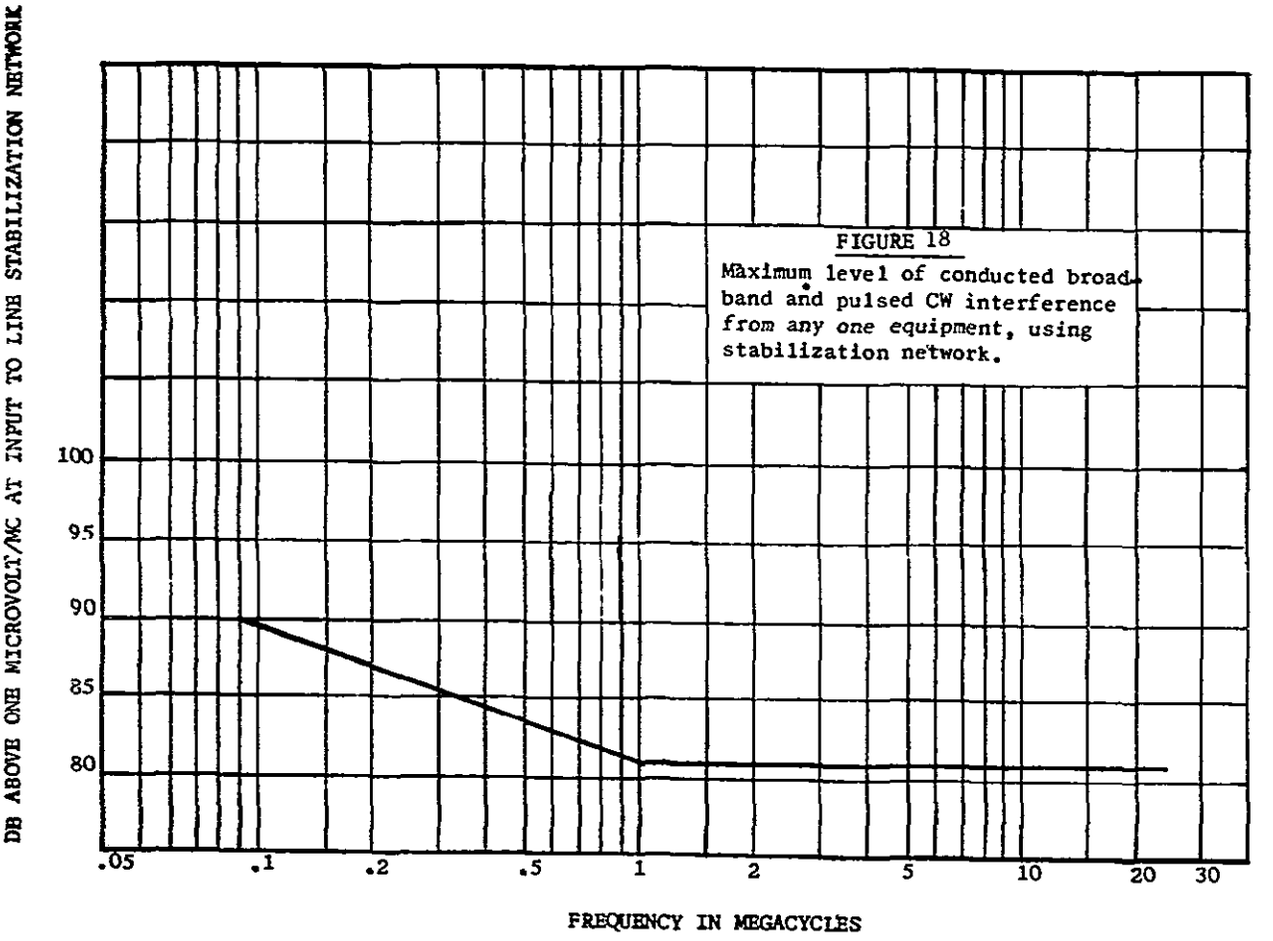

FIGURE 18

Maximum level of conducted broadband and pulsed CW interference from any one equipment, using stabilization network.

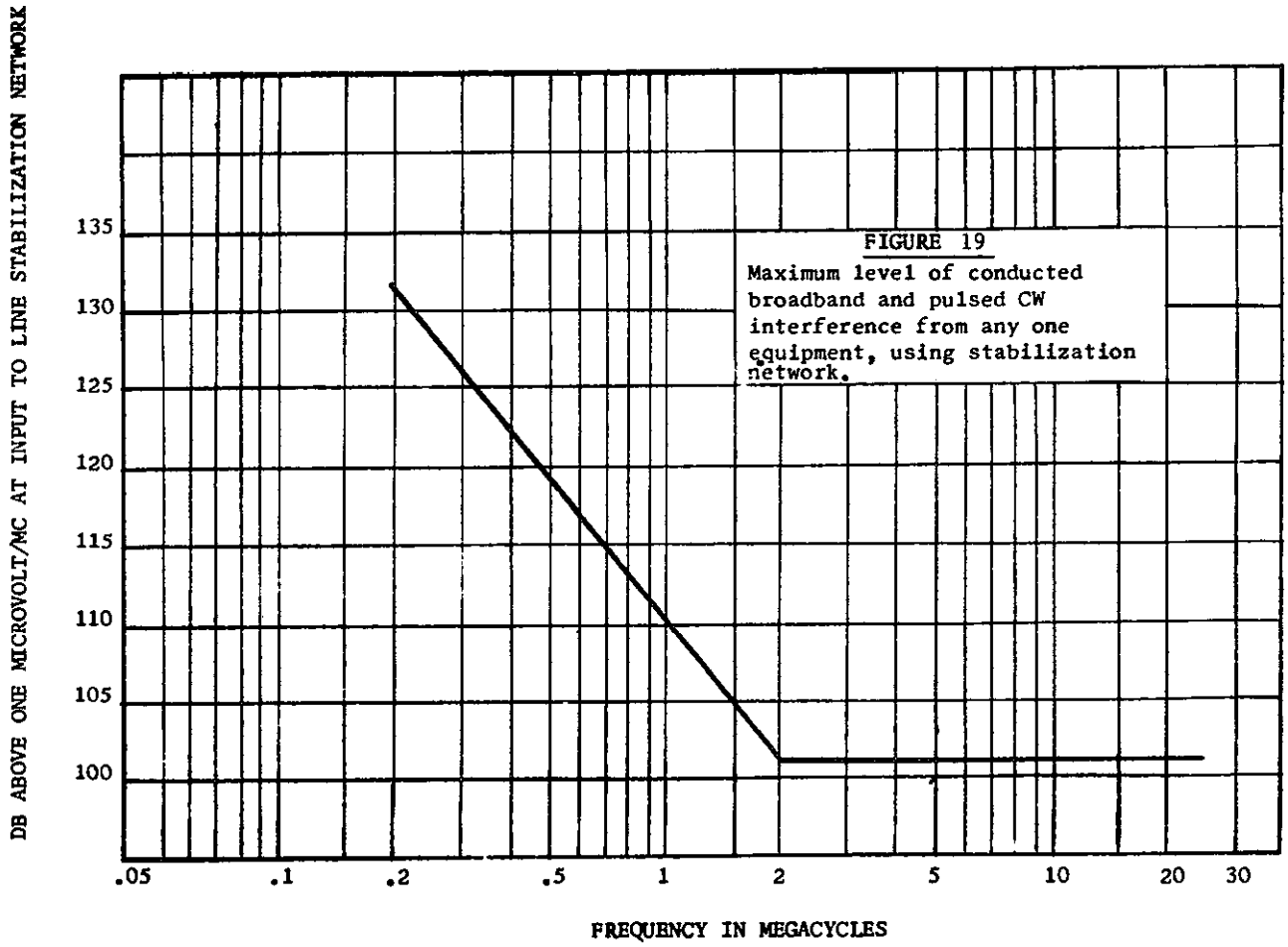

FIGURE 19

Maximum level of conducted broadband and pulsed CW interference from any one equipment, using stabilization network.

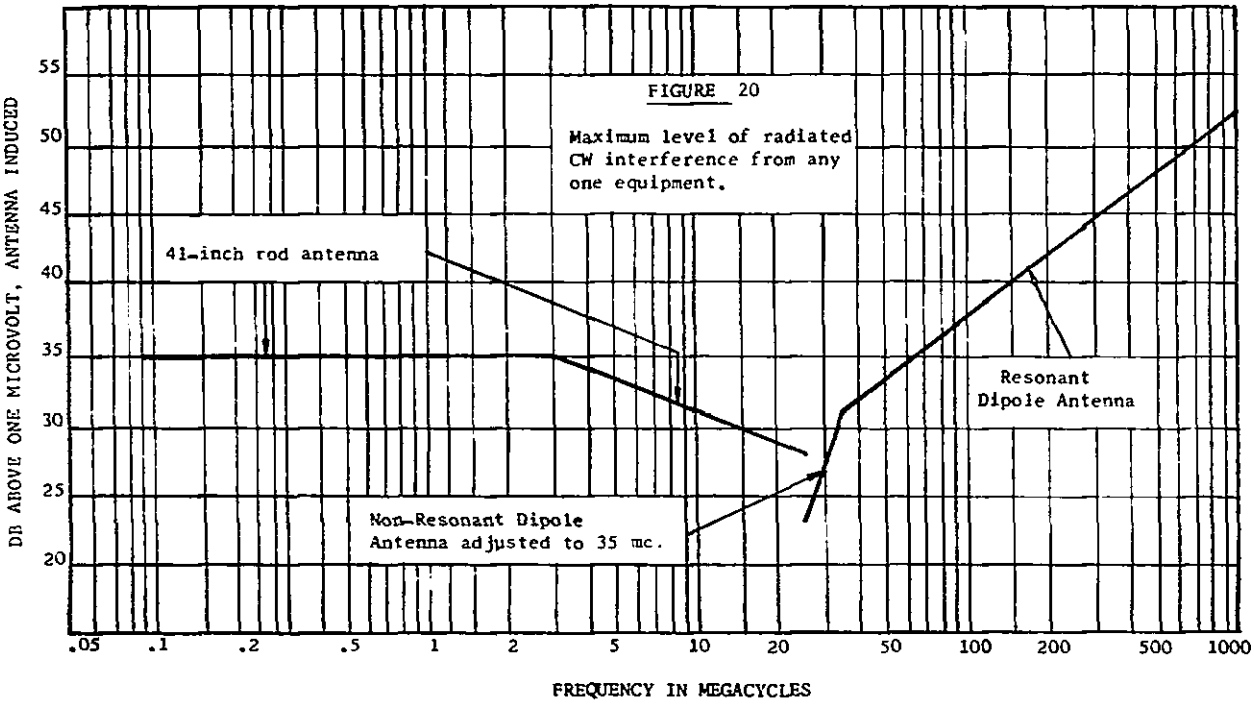
FIGURE 20
Maximum level of radiated CW interference from any one equipment.
41-inch rod antenna
Resonant Dipole Antenna
Non-Resonant Dipole Antenna adjusted to 35 mc.
DB ABOVE ONE MICROVOLT, ANTENNA INDUCED
55
50
45
40
35
30
25
20
.05
.1
.2
.5
1
2
5
10
20
50
100
200
500
1000
FREQUENCY IN MEGACYCLES

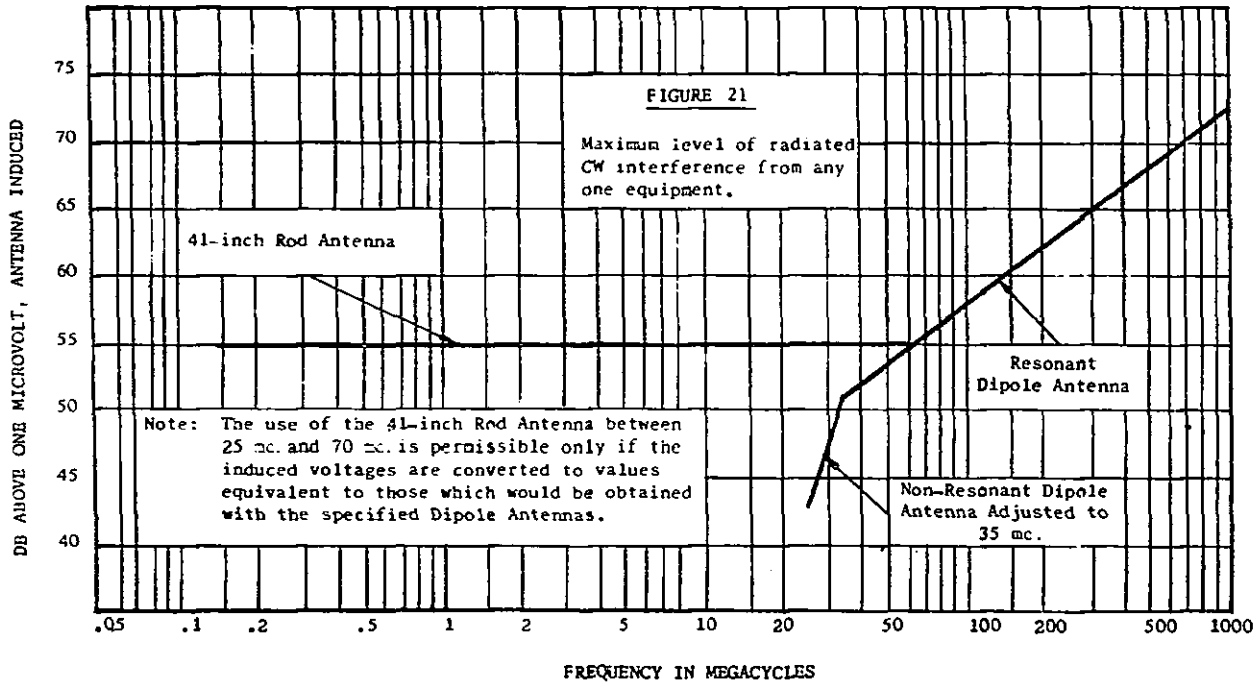
FIGURE 21
Maximum level of radiated CW interference from any one equipment.
41-inch Rod Antenna
Resonant Dipole Antenna
Non-Resonant Dipole Antenna Adjusted to 35 mc.
Note: The use of the 41-inch Rod Antenna between 25 mc. and 70 mc. is permissible only if the induced voltages are converted to values equivalent to those which would be obtained with the specified Dipole Antennas.
DB ABOVE ONE MICROVOLT, ANTENNA INDUCED
75
70
65
60
55
50
45
40
.05
.1
.2
.5
1
2
5
10
20
50
100
200
500
1000
FREQUENCY IN MEGACYCLES

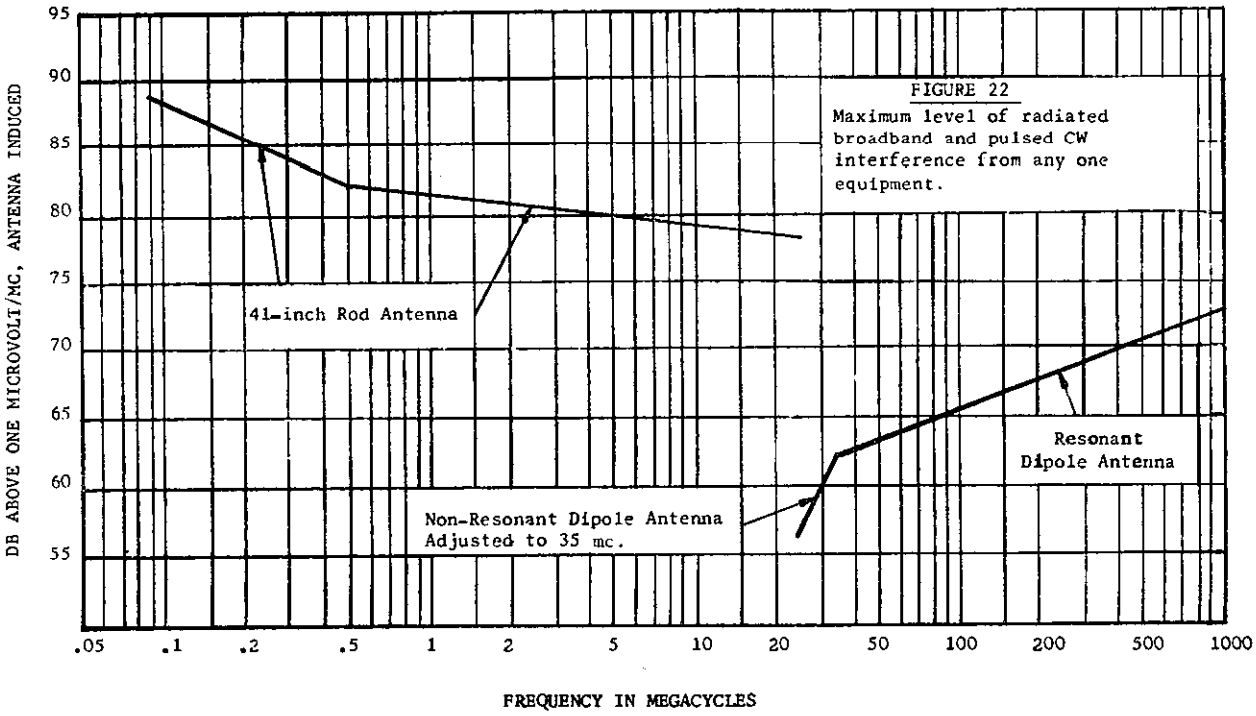

FIGURE 22

Maximum level of radiated broadband and pulsed CW interference from any one equipment.

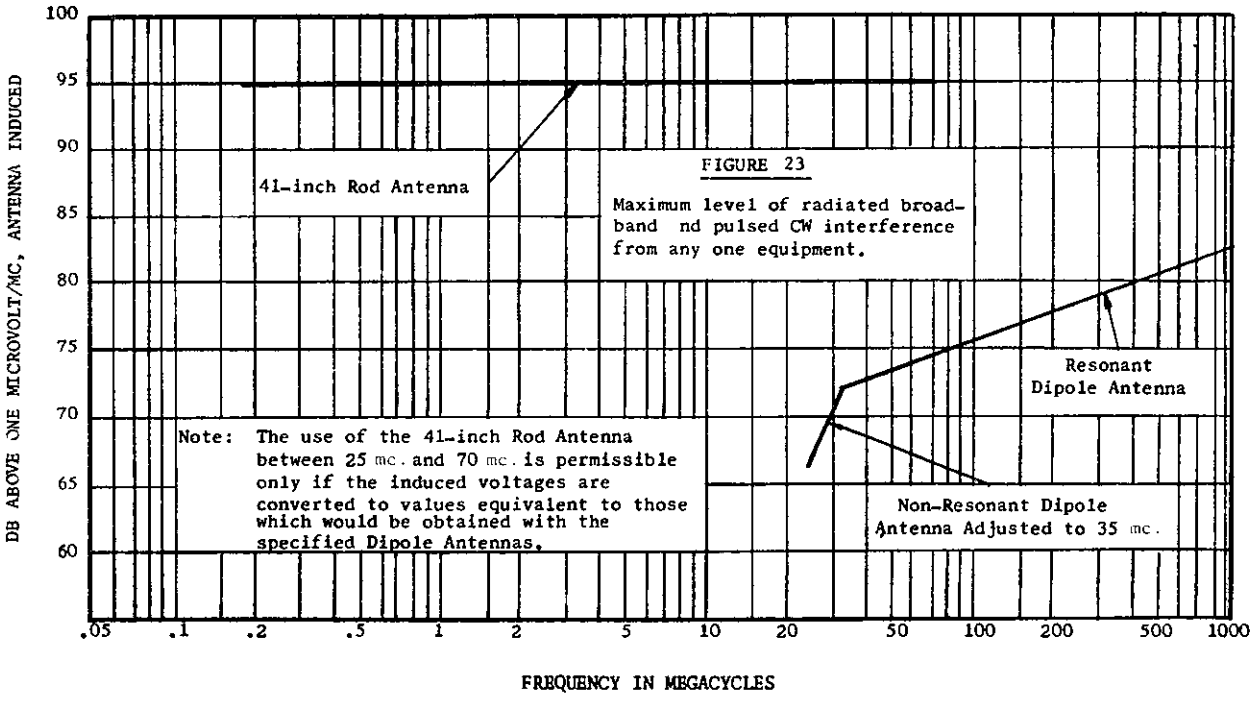

FIGURE 23

Maximum level of radiated broadband nd pulsed CW interference from any one equipment.

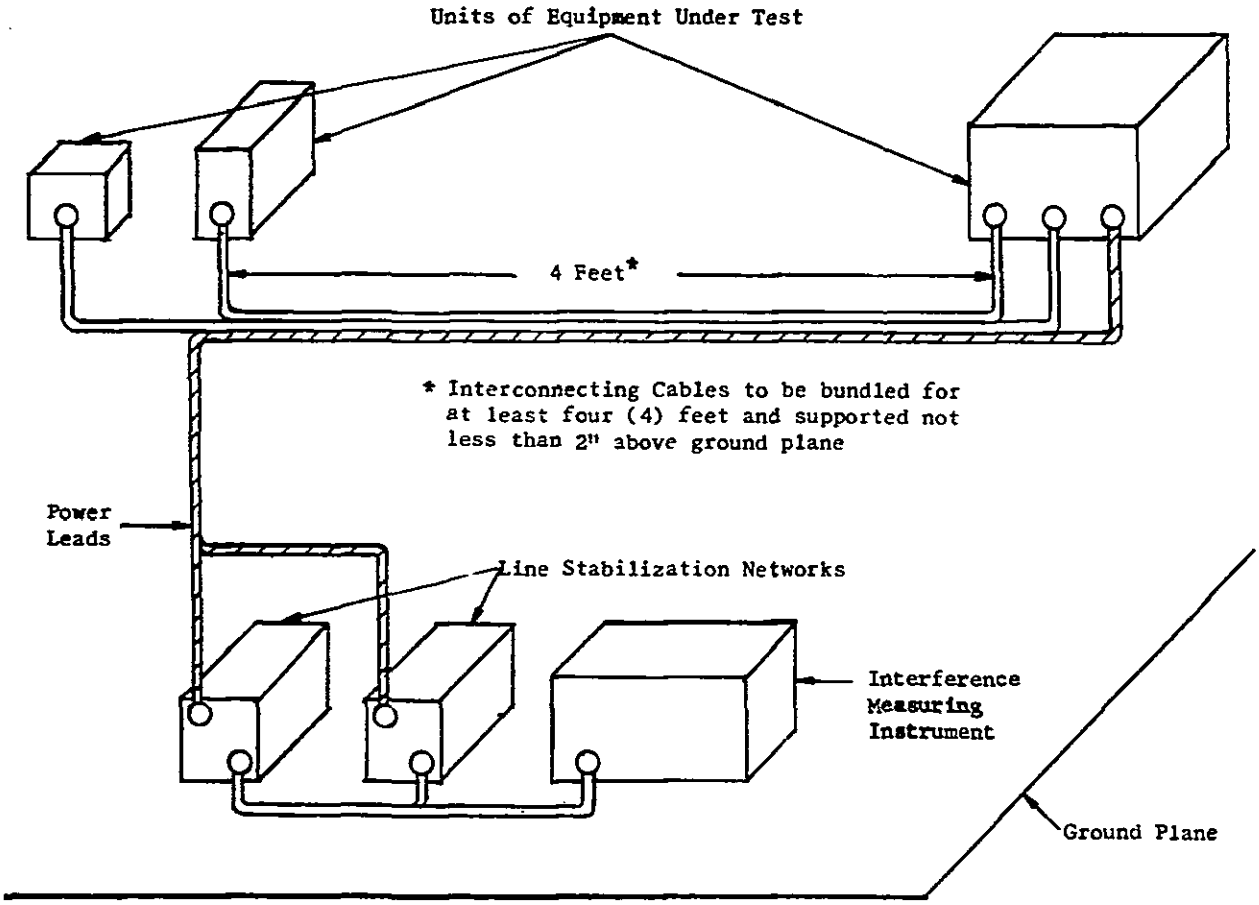

FIGURE 24.—Arrangement of equipment for conducted RF interference test.

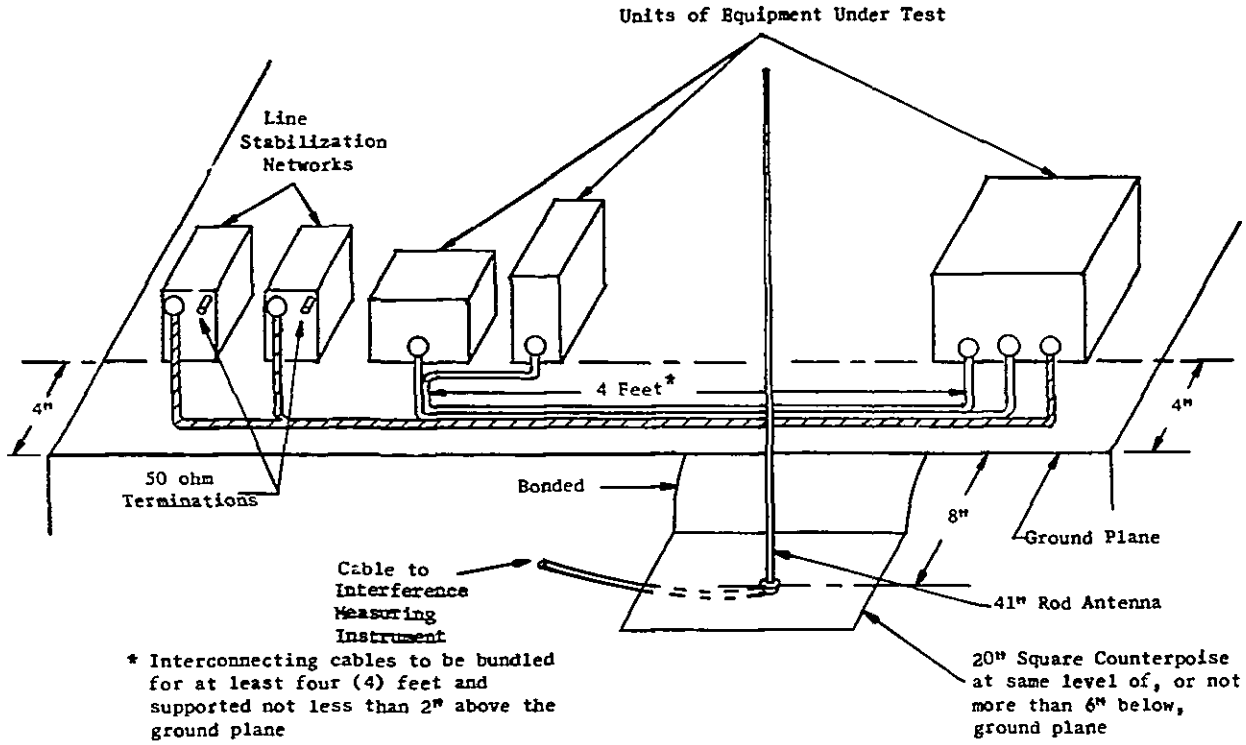

FIGURE 25. Location of rod antenna and arrangement of equipment.

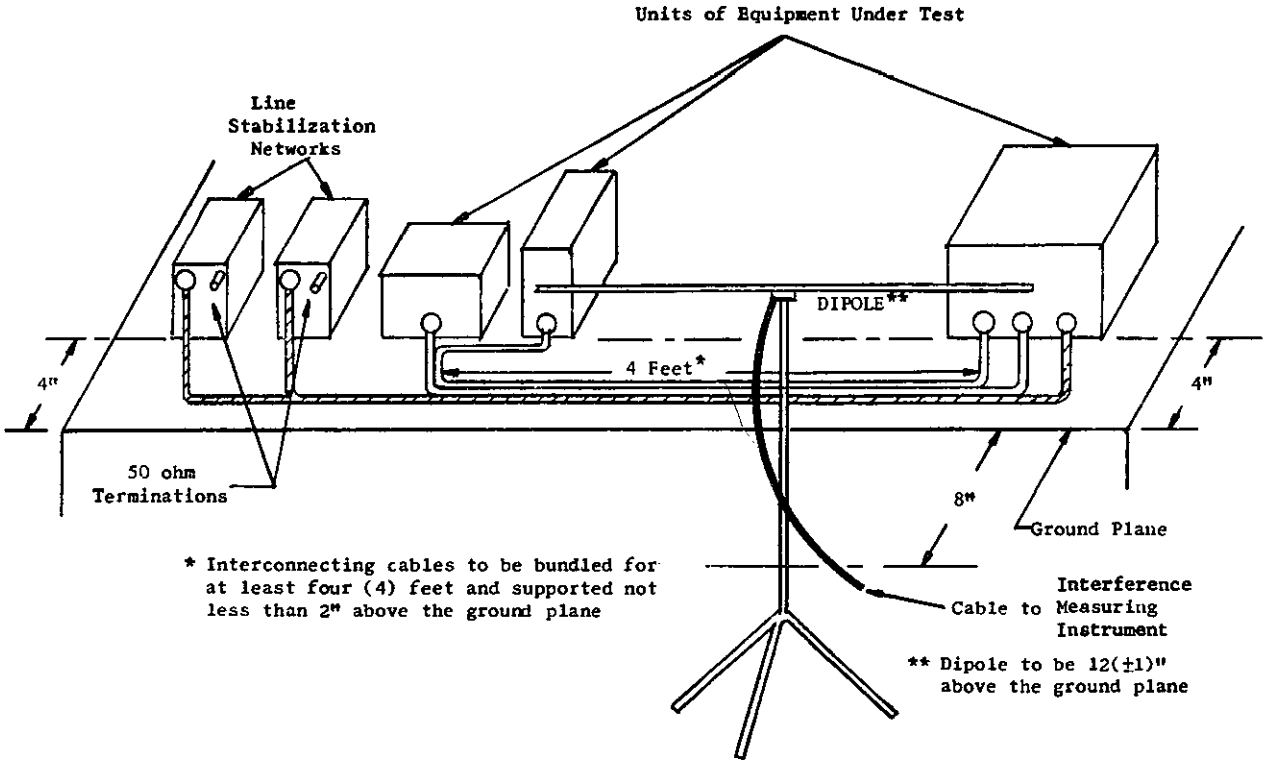

FIGURE 26.—Location of dipole antenna and arrangement of equipment.