UNITED STATES OF AMERICA
CIVIL AERONAUTICS BOARD
WASHINGTON, D. C.

Civil Air Regulations Amendment 4b-2
Effective: January 17, 1951
Adopted: December 13, 1950

COCKPIT STANDARDIZATION

Recent experience in military support activities where civil aircraft have been flown by pilots from different airlines has indicated the desirability both from a safety and national defense standpoint of having more standardization of cockpit arrangements than is currently the case. While Part 4b prescribes specific requirements for actuation of many airplane controls and thus points in the direction of a standardized cockpit, it does not prescribe specific arrangements for the basic flight instruments and for certain controls, nor does it prescribe specific control knob shapes. The amendments herein promulgated prescribe such requirements.

As we previously indicated in our notice of proposed rule making published in the Federal Register on July 14, 1949 (14 F.R. 3900), it is important from a national defense standpoint that there be a substantial similarity not only between civil aircraft operated by different air carriers but between civil and military aircraft, since it may be expected that civil aircraft will be used by the military as well as interchanged among air carriers. For this reason the regulations now being promulgated closely follow the recommendations of the Cockpit Layout Panel of the Aircraft Committee of the Munitions Board. It is to be expected that aircraft purchased by the military services will comply with the standards so recommended.

Interested persons have been afforded an opportunity to participate in the making of this amendment, and due consideration has been given to all relevant matter presented.

In consideration of the foregoing the Civil Aeronautics Board hereby amends Part 4b of the Civil Air Regulations (14 CFR, Part 4b, as amended) effective January 17, 1951:

1. By amending § 4b.353 (b) to read as follows:

4b.353 Controls. * * *

(b) The direction of movement of controls shall be according to Figures 4b-16 and 4b-17. Wherever practicable the sense of motion involved in the operation of other controls shall correspond with the sense of the effect of the operation upon the airplane or upon the part operated. All controls of a variable nature employing a rotary motion shall move clockwise from the off position, through an increasing range, to the full on position.

2. By amending Figure 4b-17 to read as follows:

CONTROLS	MOVEMENT AND ACTUATION
Powerplant	
Throttles	Forward to increase forward thrust and rearward to increase rearward thrust
Propellers	Forward to increase rpm
Mixture	Forward for rich
Carburetor air heat	Forward for cold
Supercharger	Forward or upward for low blower
Auxiliary	
Landing gear	Down to extend

Figure 4b-17

POWERPLANT AND AUXILIARY CONTROLS

3. By amending § 4b.353 (e) to read as follows:

4b.353 Controls. * * *

(e) The wing flap (or auxiliary lift device) control and the landing gear control shall be separated from each other by at least 6 inches to prevent confusion and inadvertent operation. If the landing gear control and the wing flap control are arranged vertically, the landing gear control shall be positioned lower than the wing flap control. If the controls are arranged horizontally, the landing gear control shall be positioned to the right of the wing flap control.

4. By adding a new § 4b.353 (f) to read as follows:

4b.353 Controls. * * *

(f) The shape of control knobs shall be in accordance with Figure 4b-22.

5. By amending § 4b.471 to read as follows:

4b.471 Throttle and A.D.I. system controls.

(a) A separate throttle control shall be provided for each engine.

Throttle controls shall be grouped and arranged to permit separate control of each engine and also simultaneous control of all engines.

(b) Throttle controls shall afford a positive and immediately responsive means of controlling the engines.

(c) If an antidetonant injection system is provided, the control shall be incorporated in the throttle controls, except that a separate control may be provided for the antidetonant injection pump.

6. By amending § 4b.473 to read as follows:

4b.473 Mixture controls.

(a) If mixture controls are provided, a separate control shall be provided for each engine. The mixture controls shall be grouped and arranged to permit separate control of each engine and also simultaneous control of all engines.

(b) Any intermediate position of the mixture control which corresponds with a normal operating setting shall be provided with a sensory and a visual identification.

(c) Mixture controls shall be placed to the right of or aft of the propeller speed and pitch controls. The control levers shall be shorter than the control levers for the propeller speed and pitch controls.

7. By adding a new § 4b.474 (a) (3) to read as follows:

4b.474 Propeller controls.

(a) Propeller speed and pitch controls. * * *

(3) The propeller speed and pitch controls shall be placed to the right of or aft of the throttle controls. The control levers shall be shorter than the control levers for the throttle controls.

8. By adding a new § 4b.476a to read as follows:

4b.476a Supercharger controls. Supercharger controls shall be located to the left and below the throttle controls or on the aft side of the pedestal.

9. By amending § 4b.611 (b) to read as follows:

4b.611 Arrangement and visibility of instrument installations. * * *

(b) Flight instruments required by § 4b.603 shall be grouped in accordance with Figure 4b-23 and centered as nearly as practicable about the vertical plane of the pilot's forward vision. The required flight

instruments not shown in Figure 4b-23 shall be placed adjacent to the prescribed grouping, except that item 4b.603 (c) shall not be placed adjacent to item 4b.603 (b).

10. By adding new Figures 4b-22 and 4b-23 as appended hereto.

(Sec. 205 (a), 52 Stat. 984; 49 U.S.C. 425 (a). Interpret or apply secs. 601, 603, 52 Stat. 1007, 1009; 49 U.S.C. 551, 553)

By the Civil Aeronautics Board:

/s/ M. C. Mulligan

M. C. Mulligan
Secretary

(SEAL)

Part 4b last printed July 20, 1950.

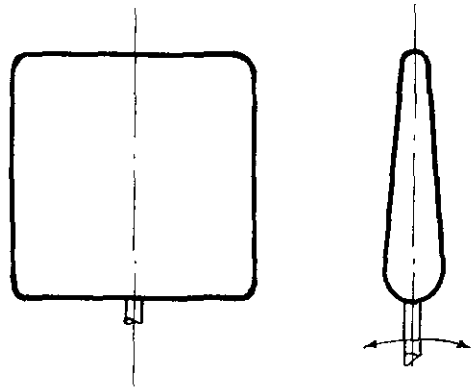

FLAP CONTROL KNOB

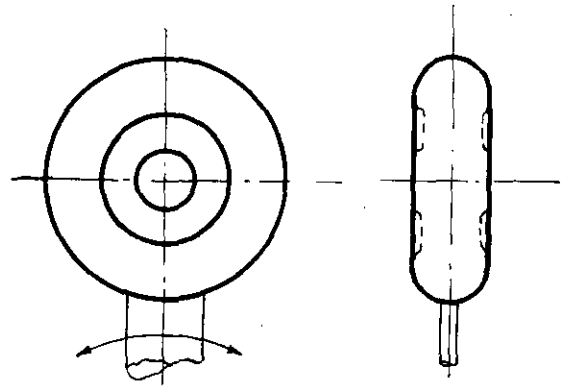

LANDING GEAR CONTROL KNOB

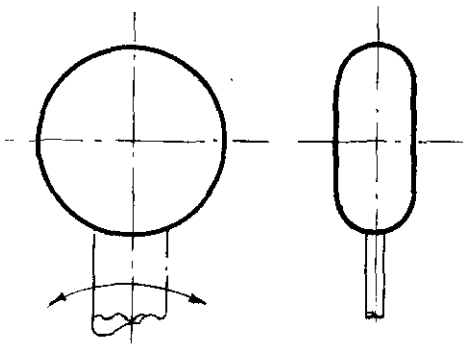

THROTTLE CONTROL KNOB

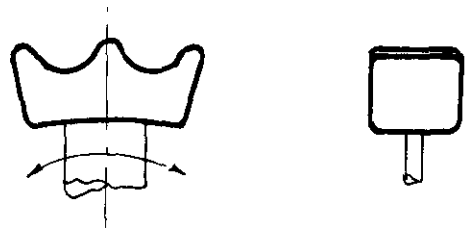

RPM CONTROL KNOB

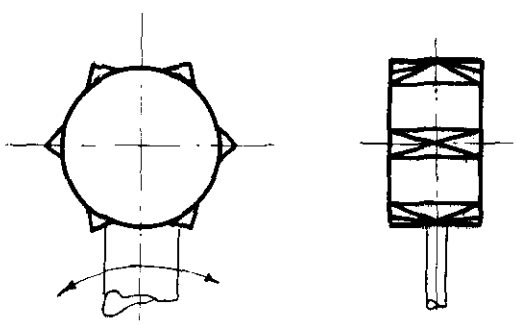

MIXTURE CONTROL KNOB

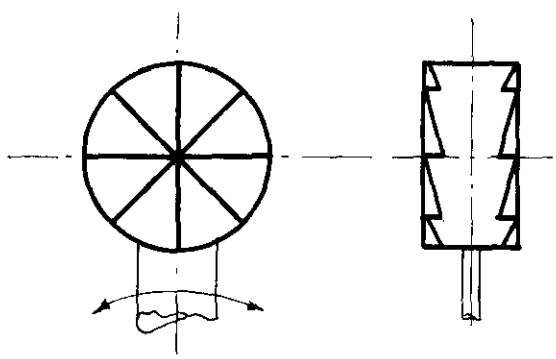

SUPERCHARGER CONTROL KNOB

Fig. 4b-22 — CONTROL KNOB SHAPES

15672

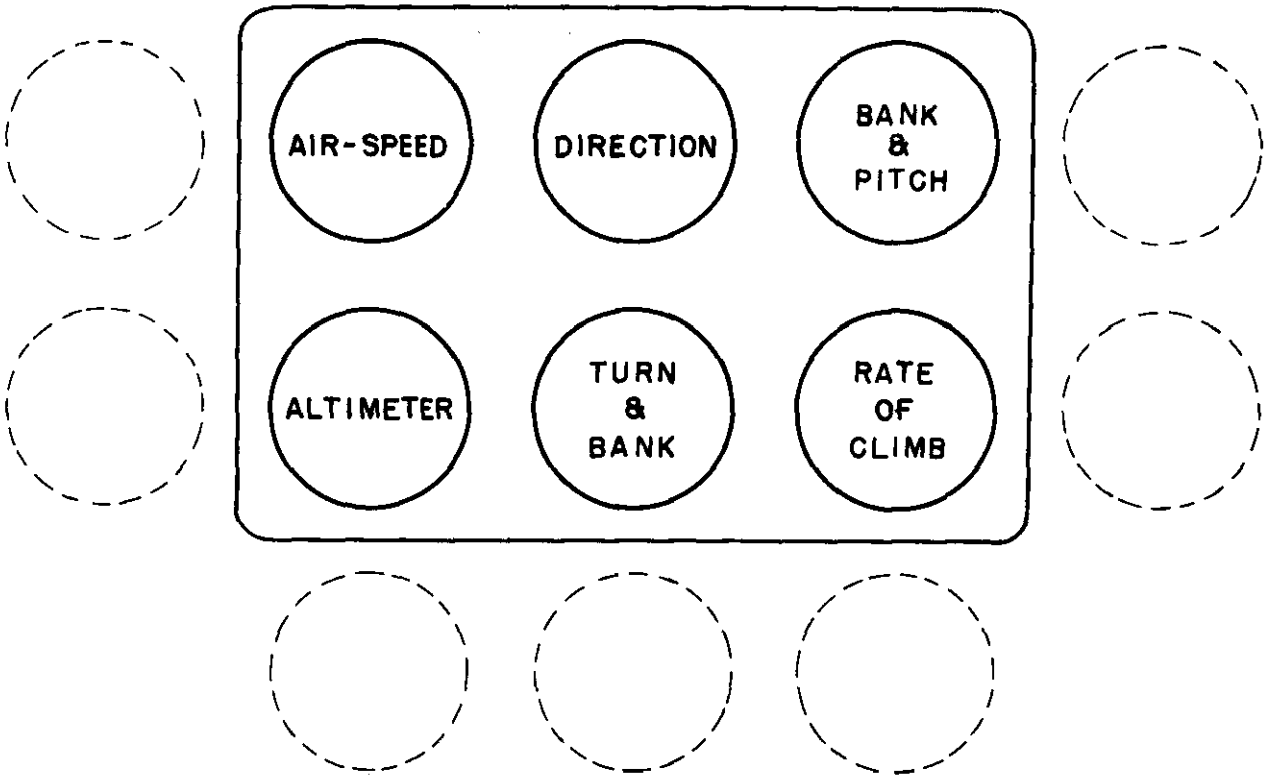

NOTE:

IF AN INSTRUMENT IS USED INTENDED TO INDICATE THE CORRECT TRACK OR HEADING ON THE FINAL APPROACH TO A LANDING (e.g. ILS CROSS-POINTER, ZERO READER, PILOT POSITION INDICATOR, OMNI-MAG, FLIGHT PATH COMPUTER, ETC.), IT SHALL BE LOCATED IN THE UPPER CENTER POSITION.

IF A FLIGHT COMPUTER INSTRUMENT (e.g. ZERO READER, PILOT POSITION INDICATOR, OMNI-MAG, FLIGHT PATH COMPUTER, ETC.) IS USED, THE SUPPLEMENTAL MONITORING INSTRUMENT (e.g. ILS CROSS-POINTER) SHALL BE LOCATED TO THE LEFT OF THE UPPER LEFT POSITION.

IF THE FLIGHT COMPUTER INDICATOR INCORPORATES A DIRECTION INDICATOR, THE SUPPLEMENTAL MONITORING INSTRUMENT SHALL BE LOCATED IN THE LOWER CENTER POSITION, OTHERWISE THE DIRECTION INDICATOR SHALL BE PLACED IN THE LOWER CENTER POSITION.

IF THE LOWER CENTER POSITION IS USED FOR A MONITORING INSTRUMENT OR FOR A DIRECTION INDICATOR, THE TURN AND BANK INDICATOR SHALL BE PLACED IN ANY ONE OF THE POSITIONS SHOWN ADJACENT TO THE SIX BASIC POSITIONS.

Fig. 4b-23 — BASIC FLIGHT INSTRUMENT PANEL ARRANGEMENT

15687