CIVIL AERONAUTICS BOARD

WASHINGTON, D. C.

DOT LIBRARY
FOB 10-A

CIVIL AIR REGULATIONS

PART 4b—AIRPLANE AIRWORTHINESS TRANSPORT CATEGORIES

DOT LIBRARY
FOB 10-A



DOT LIBRARY
FOB 10-A

As amended to December 31, 1953

UNITED STATES
GOVERNMENT PRINTING OFFICE
WASHINGTON : 1954

For sale by the Superintendent of Documents, U. S. Government Printing Office
Washington 25, D. C. - Price 25 cents

DOT LIBRARY
FOB 10-A

TITLE 14—CIVIL AVIATION

Chapter I—Civil Aeronautics Board

Subchapter A—Civil Air Regulations

PART 4b—AIRPLANE AIRWORTHINESS; TRANSPORT CATEGORIES

RECAPITULATION OF PART

Because of the number of outstanding amendments to Part 4b there follows a recapitulation of Part 4b incorporating all amendments up to December 31, 1953.

Subpart A—General

APPLICABILITY AND DEFINITIONS

Sec.
4b.0 Applicability of this part.
4b.1 Definitions.

CERTIFICATION

4b.10 Eligibility for type certificates.
4b.11 Designation of applicable regulations.
4b.12 Amendment of part.
4b.13 Type certificate.
4b.14 Data required.
4b.15 Inspections and tests.
4b.16 Flight tests.
4b.17 Airworthiness, experimental, and production certificates.
4b.18 Approval of materials, parts, processes, and appliances.
4b.19 Changes in type design.

Subpart B—Flight

GENERAL

4b.100 Proof of compliance.
4b.101 Weight limitations.
4b.102 Center of gravity limitations.
4b.103 Additional limitations on weight distribution.
4b.104 Empty weight.
4b.105 Use of ballast.

PERFORMANCE

4b.110 General.
4b.111 Wing flap positions.
4b.112 Stalling speeds.
4b.113 Take-off; general.
4b.114 Take-off speeds.
4b.115 Accelerate-stop distance.
4b.116 Take-off path.
4b.117 Temperature accountability.
4b.118 Climb; general.
4b.119 Climb; all engines operating.
4b.120 One-engine-inoperative climb.
4b.121 Two-engine-inoperative climb.
4b.122 Determination of the landing distance; general.
4b.123 Landplanes.
4b.124 Seaplanes or float planes.
4b.125 Skiplanes.

CONTROLLABILITY

4b.130 Controllability; general.
4b.131 Longitudinal control.
4b.132 Directional and lateral control.
4b.133 Minimum control speed, V_{MC}.

TRIM

4b.140 General.
4b.141 Lateral and directional trim.
4b.142 Longitudinal trim.
4b.143 Longitudinal, directional, and lateral trim.
4b.144 Trim for airplanes with four or more engines.

STABILITY

4b.150 General.
4b.151 Static longitudinal stability.
4b.152 Stability during landing.
4b.153 Stability during approach.
4b.154 Stability during climb.
4b.155 Stability during cruising.
4b.156 Dynamic longitudinal stability.
4b.157 Static directional and lateral stability.

Sec.
4b.158 Dynamic directional and lateral stability.

STALLING CHARACTERISTICS

4b.160 Stalling; symmetrical power.
4b.161 Stalling; asymmetrical power.
4b.162 Stall warning.

GROUND HANDLING CHARACTERISTICS

4b.170 Longitudinal stability and control.
4b.171 Directional stability and control.
4b.172 Shock absorption.
4b.173 Demonstrated cross wind.

WATER HANDLING CHARACTERISTICS

4b.180 Water conditions.
4b.181 Wind conditions.
4b.182 Control and stability on the water.

MISCELLANEOUS FLIGHT REQUIREMENTS

4b.190 Flutter and vibration.

Subpart C—Structure

GENERAL

4b.200 Loads.
4b.201 Strength and deformation.
4b.202 Proof of structure.

FLIGHT LOADS

4b.210 General.
4b.211 Flight envelopes.
4b.212 Effect of high lift devices.
4b.213 Symmetrical flight conditions.
4b.214 Rolling conditions.
4b.215 Yawing conditions.
4b.216 Supplementary flight conditions.

CONTROL SURFACE AND SYSTEM LOADS

4b.220 Control surface loads; general.
4b.221 Wing flaps.
4b.222 Tabs.
4b.223 Special devices.
4b.224 Primary flight control systems.
4b.225 Dual primary flight control systems.
4b.226 Ground gust conditions.
4b.227 Secondary control systems.

GROUND LOADS

4b.230 General.
4b.231 Level landing conditions.
4b.232 Tail-down landing conditions.
4b.233 One-wheel landing condition.
4b.234 Lateral drift landing condition.
4b.235 Ground handling conditions.
4b.236 Unsymmetrical loads on dual-wheel units.

WATER LOADS

4b.250 General.
4b.251 Design weights and center of gravity positions.
4b.252 Application of loads.
4b.253 Hull and main float load factors.
4b.254 Hull and main float landing conditions.
4b.255 Hull and main float take-off condition.
4b.256 Hull and main float bottom pressures.
4b.257 Auxiliary float loads.
4b.258 Seawing loads.

EMERGENCY LANDING CONDITIONS

4b.260 General.
4b.261 Structural ditching provisions.

Subpart D—Design and Construction

GENERAL

4b.300 Scope.
4b.301 Materials.
4b.302 Fabrication methods.
4b.303 Standard fastenings.
4b.304 Protection.
4b.305 Inspection provisions.
4b.306 Material strength properties and design values.
4b.307 Special factors.
4b.308 Flutter, deformation, and vibration.

CONTROL SURFACES

Sec.
4b.310 General.
4b.311 Proof of strength.
4b.312 Installation.
4b.313 Hinges.

CONTROL SYSTEMS

4b.320 General.
4b.321 Two-control airplanes.
4b.322 Trim controls and systems.
4b.323 Wing flap controls.
4b.324 Wing flap interconnection.
4b.325 Control system stops.
4b.326 Control system locks.
4b.327 Static tests.
4b.328 Operation tests.
4b.329 Control system details; general.

LANDING GEAR

4b.330 General.
4b.331 Shock absorbers.
4b.332 Landing gear tests.
4b.333 Limit load factor determination.
4b.334 Retracting mechanism.
4b.335 Wheels.
4b.336 Tires.
4b.337 Brakes.
4b.338 Skis.

HULLS AND FLOATS

4b.340 General.
4b.341 Seaplane main floats.
4b.342 Boat hulls.

PERSONNEL AND CARGO ACCOMMODATIONS

4b.350 Pilot compartment; general.
4b.351 Pilot compartment vision.
4b.352 Windshield and windows.
4b.353 Controls.
4b.354 Instrument arrangement.
4b.355 Instrument marking.
4b.356 Doors.
4b.357 Door louvres.
4b.358 Seats, berths, and safety belts.
4b.359 Cargo and baggage compartments.

EMERGENCY PROVISIONS

4b.360 General.
4b.361 Ditching.
4b.362 Emergency evacuation.

VENTILATION, HEATING, AND PRESSURIZATION

4b.370 General.
4b.371 Ventilation.
4b.372 Heating systems.
4b.373 Pressurized cabins; general
4b.374 Pressure supply.
4b.375 Pressure control.
4b.376 Tests.

FIRE PROTECTION

4b.380 General.
4b.381 Cabin interiors.
4b.382 Cargo and baggage compartments.
4b.383 Cargo compartment classification.
4b.384 Proof of compliance.
4b.385 Flammable fluid fire protection.
4b.386 Combustion heater fire protection.

MISCELLANEOUS

4b.390 Reinforcement near propellers.
4b.391 Leveling marks.

Subpart E—Powerplant Installation

INSTALLATION

4b.400 General.
4b.401 Engines.
4b.402 Propellers.
4b.403 Propeller vibration.
4b.404 Propeller pitch and speed limitations.
4b.405 Propeller clearance.
4b.406 Propeller de-icing provisions.

FUEL SYSTEM OPERATION AND ARRANGEMENT

4b.410 General.
4b.411 Fuel system independence.
4b.412 Pressure cross-feed arrangements.
4b.413 Fuel flow rate.
4b.414 Pump systems.

Sec.
4b.415 Transfer systems.
4b.416 Determination of unusable fuel supply and fuel system operation on low fuel.
4b.417 Fuel system hot weather operation.
4b.418 Flow between interconnected tanks.

FUEL SYSTEM CONSTRUCTION AND INSTALLATION

4b.420 General.
4b.421 Fuel tank tests.
4b.422 Fuel tank installation.
4b.423 Fuel tank expansion space.
4b.424 Fuel tank sump.
4b.425 Fuel tank filler connection.
4b.426 Fuel tank vents and carburetor vapor vents.
4b.427 Fuel tank outlet.
4b.428 Under-wing fueling provisions.

FUEL SYSTEM COMPONENTS

4b.430 Fuel pumps.
4b.431 Fuel pump installation.
4b.432 Fuel system lines and fittings.
4b.433 Fuel lines and fittings in designated fire zones.
4b.434 Fuel valves.
4b.435 Fuel strainer.
4b.436 Fuel system drains.
4b.437 Fuel jettisoning system.

OIL SYSTEM

4b.440 General.
4b.441 Oil tank construction.
4b.442 Oil tank tests.
4b.443 Oil tank installation.
4b.444 Oil lines and fittings.
4b.445 Oil valves.
4b.446 Oil radiators.
4b.447 Oil filters.
4b.448 Oil system drains.
4b.449 Propeller feathering system.

COOLING SYSTEM

4b.450 General.
4b.451 Cooling tests.
4b.452 Climb cooling test procedure.
4b.453 Take-off cooling test procedure.
4b.454 Cooling test procedure for flying boat operation.
4b.455 Liquid cooling systems.
4b.456 Coolant tank.
4b.457 Coolant system installation.

INDUCTION AND EXHAUST SYSTEMS

4b.460 General.
4b.461 Induction system de-icing and anti-icing provisions.
4b.462 Carburetor air preheater design.
4b.463 Induction system ducts.
4b.464 Induction system screens.
4b.465 Carburetor air cooling.
4b.466 Inter-coolers and after-coolers.
4b.467 Exhaust system and installation components.

POWERPLANT CONTROLS AND ACCESSORIES

4b.470 Powerplant controls; general.
4b.471 Throttle and A. D. I. system controls.
4b.472 Ignition switches.
4b.473 Mixture controls.
4b.474 Propeller controls.
4b.475 Fuel system controls.
4b.476 Carburetor air preheat controls.
4b.476a Supercharger controls.
4b.477 Powerplant accessories.
4b.478 Engine ignition systems.

POWERPLANT FIRE PROTECTION

4b.480 Designated fire zones.
4b.481 Flammable fluids.
4b.482 Shut-off means.
4b.483 Lines and fittings.
4b.484 Fire extinguisher systems.
4b.485 Fire detector systems.
4b.486 Fire walls.
4b.487 Cowling and nacelle skin.
4b.488 Engine accessory section diaphragm.
4b.489 Drainage and ventilation of fire zones.
4b.490 Protection of other airplane components against fire.

Subpart F—Equipment

GENERAL

Sec.
4b.600 Scope.
4b.601 Functional and installational requirements.
4b.602 Required basic equipment.
4b.603 Flight and navigational instruments.
4b.604 Powerplant instruments.
4b.605 Miscellaneous equipment.
4b.606 Equipment, systems, and installations.

INSTRUMENTS; INSTALLATION

4b.610 General.
4b.611 Arrangement and visibility of instrument installations.
4b.612 Flight and navigational instruments.
4b.613 Powerplant instruments.

ELECTRICAL SYSTEMS AND EQUIPMENT

4b.620 General.
4b.621 Electrical system capacity.
4b.622 Generating system.
4b.623 Distribution system.
4b.624 Electrical protection.
4b.625 Electrical equipment and installation.
4b.626 Electrical system fire and smoke protection.
4b.627 Electrical system tests and analyses.

LIGHTS

4b.630 Instrument lights.
4b.631 Landing lights.
4b.632 Position light system installation.
4b.633 Position light system dihedral angles.
4b.634 Position light distribution and intensities.
4b.635 Position light color specifications.
4b.636 Riding light.
4b.637 Anti-collision light.

SAFETY EQUIPMENT

4b.640 Ice protection.
4b.641 Hand fire extinguishers.
4b.642 Flare installation.
4b.643 Safety belts.
4b.644 Safety belt signal.
4b.645 Ditching equipment.
4b.646 Stowage of safety equipment.

MISCELLANEOUS EQUIPMENT

4b.650 Radio and electronic equipment.
4b.651 Oxygen equipment and supply.
4b.652 Engine-driven accessories.
4b.653 Hydraulic systems; strength.
4b.654 Hydraulic systems; design.
4b.655 Hydraulic system fire protection.
4b.658 Vacuum systems.

Subpart G—Operating Limitations and Information

GENERAL

4b.700 Scope.

OPERATING LIMITATIONS

4b.710 Air-speed limitations; general.
4b.711 Never-exceed speed V_{NE}.
4b.712 Normal operating limit speed V_{NO}.
4b.713 Maneuvering speed.
4b.714 Flap extended speed V_{FE}.
4b.715 Landing gear operating speed V_{LO}.
4b.716 Landing gear extended speed V_{LE}.
4b.717 Minimum control speed V_{MC}.
4b.718 Powerplant limitations.
4b.719 Airplane weight, center of gravity, and weight distribution limitations.
4b.720 Minimum flight crew.
4b.721 Types of operation.
4b.722 Maximum operating altitude.
4b.723 Maneuvering flight load factors.

MARKINGS AND PLACARDS

4b.730 General.
4b.731 Instrument markings; general.
4b.732 Air-speed indicator.
4b.733 Magnetic direction indicator.
4b.734 Powerplant instruments; general.
4b.735 Oil quantity indicators.
4b.736 Fuel quantity indicator.
4b.737 Control markings; general.
4b.738 Miscellaneous markings and placards.

AIRPLANE FLIGHT MANUAL

4b.740 General.
4b.741 Operating limitations.
4b.742 Operating procedures.
4b.743 Performance information.

AIRPLANE IDENTIFICATION DATA

4b.750 Identification plate.
4b.751 Identification marks.

AUTHORITY: §§ 4b.0 to 4b.751 issued under sec. 205, 52 Stat. 984, as amended; 49 U. S. C. 425. Interpret or apply secs. 601, 603, 52 Stat. 1007, as amended, 1009, as amended; 49 U. S. C. 551, 553.

SUBPART A—GENERAL

APPLICABILITY AND DEFINITIONS

§ 4b.0 *Applicability of this part.* This part establishes standards with which compliance shall be demonstrated for the issuance of a type certificate for transport category airplanes. This part, until superseded or rescinded, shall apply to all transport category airplanes for which applications for type certification in the transport category are made after the effective date of this part (November 9, 1945).

§ 4b.1 *Definitions.* As used in this part terms are defined as follows:

(a) *Administration*—(1) *Administrator.* The Administrator is the Administrator of Civil Aeronautics.

(2) *Applicant.* An applicant is a person or persons applying for approval of an airplane or any part thereof.

(3) *Approved.* Approved, when used alone or as modifying terms such as means, devices, specifications, etc., shall mean approved by the Administrator. (See § 4b.18.)

(b) *General design*—(1) *Standard atmosphere.* The standard atmosphere is an atmosphere defined as follows:

(i) The air is a dry, perfect gas,

(ii) The temperature at sea level is 59° F.,

(iii) The pressure at sea level is 29.92 inches Hg,

(iv) The temperature gradient from sea level to the altitude at which the temperature equals −67° F. is −0.003566° F./ft. and zero thereabove,

(v) The density ρ_0 at sea level under the above conditions is 0.002378 pounds sec.^{2}/ft.^{4}.

(2) *Maximum anticipated air temperature.* The maximum anticipated air temperature is a temperature specified for the purpose of compliance with the powerplant cooling standards. (See § 4b.451 (b).)

(3) *Airplane configuration.* Airplane configuration is a term referring to the position of the various elements affecting the aerodynamic characteristics of the airplane (e. g., wing flaps, landing gear).

(4) *Aerodynamic coefficients.* Aerodynamic coefficients are nondimensional coefficients for forces and moments. They correspond with those adopted by the U. S. National Advisory Committee for Aeronautics.

(5) *Critical engine(s).* The critical engine is that engine(s) the failure of which gives the most adverse effect on

DOT LIBRARY
FOB 10-A

the airplane flight characteristics relative to the case under consideration.

(6) *Critical-engine-failure speed.* The critical-engine-failure speed is the airplane speed used in the determination of the take-off at which the critical engine is assumed to fail. (See § 4b.114.)

(c) *Weights*—(1) *Maximum weight.* The maximum weight of the airplane is that maximum at which compliance with the requirements of this part is demonstrated. (See § 4b.101 (a).)

(2) *Minimum weight.* The minimum weight of the airplane is that minimum at which compliance with the requirements of this part is demonstrated. (See § 4b.101 (c).)

(3) *Empty weight.* The empty weight of the airplane is a readily reproducible weight which is used in the determination of the operating weights. (See § 4b.104.)

(4) *Design maximum weight.* The design maximum weight is the maximum weight of the airplane used in structural design for flight load conditions. (See § 4b.210.)

(5) *Design minimum weight.* The design minimum weight is the minimum weight of the airplane at which compliance is shown with the structural loading conditions. (See § 4b.210.)

(6) *Design take-off weight.* The design take-off weight is the maximum airplane weight used in structural design for taxying conditions, and for landing conditions at a reduced velocity of descent. (See § 4b.210.)

(7) *Design landing weight.* The design landing weight is the maximum airplane weight used in structural design for landing conditions at the maximum velocity of descent. (See § 4b.230 (b).)

(8) *Design unit weight.* The design unit weight is a representative weight used to show compliance with the structural design requirements.

(i) Gasoline 6 pounds per U. S. gallon.

(ii) Lubricating oil 7.5 pounds per U. S. gallon.

(iii) Crew and passengers 170 pounds per person.

(d) *Speeds*—(1) IAS: Indicated air speed is equal to the pitot static airspeed indicator reading as installed in the airplane without correction for airspeed indicator system errors but including the sea level standard adiabatic compressible flow correction. (This latter correction is included in the calibration of the air-speed instrument dials.) (See §§ 4b.612 (a) and 4b.710.)

(2) CAS: Calibrated air speed is equal to the air-speed indicator reading corrected for position and instrument error. (As a result of the sea level adiabatic compressible flow correction to the air-speed instrument dial, CAS is equal to the true air speed TAS in standard atmosphere at sea level.)

(3) EAS: Equivalent air speed is equal to the air-speed indicator reading corrected for position error, instrument error, and for adiabatic compressible flow for the particular altitude. (EAS is equal to CAS at sea level in standard atmosphere.)

(4) TAS: True air speed of the airplane relative to undisturbed air. (TAS=EAS $(\rho_0/\rho)^{1/2}$.)

(5) V_A: The design maneuvering speed. (See § 4b.210 (b) (2).)

(6) V_B: The design speed for maximum gust intensity. (See § 4b.210 (b) (3).)

(7) V_C: The design cruising speed. (See § 4b.210 (b) (4).)

(8) V_D: The design diving speed. (See § 4b.210 (b) (5).)

(9) V_{DF}: The demonstrated flight diving speed. (See § 4b.190.)

(10) V_F: The design flap speed for flight loading conditions with wing flaps in the landing position. (See § 4b.210 (b) (1).)

(11) V_{FE}: The flap extended speed is a maximum speed with wing flaps in a prescribed extended position. (See § 4b.714.)

(12) V_{LE}: The landing gear extended speed is the maximum speed at which the airplane can be flown safely with the landing gear extended. (See § 4b.716.)

(13) V_{LO}: The landing gear operating speed is a maximum speed at which the landing gear can be raised or lowered safely. (See § 4b.715.)

(14) V_{MO}: The minimum control speed with the critical engine inoperative. (See § 4b.133.)

(15) V_{NE}: The never-exceed speed. (See § 4b.711.)

(16) V_{NO}: The normal operating limit speed. (See § 4b.712.)

(17) V_{s_0}: The stalling speed or the minimum steady flight speed with wing flaps in the landing position. (See §§ 4b.112 (a) and 4b.160.)

(18) V_{s_1}: The stalling speed or the minimum steady flight speed obtained in a specified configuration. (See § 4b.112 (b).)

(19) V_1: The critical-engine-failure speed. (See § 4b.114.)

(20) V_2: The take-off safety speed. (See § 4b.114 (b).)

(e) *Structural*—(1) *Limit load.* A limit load is the maximum load anticipated in normal conditions of operation. (See § 4b.200.)

(2) *Ultimate load.* An ultimate load is a limit load multiplied by the appropriate factor of safety. (See § 4b.200.)

(3) *Factor of safety.* The factor of safety is a design factor used to provide for the possibility of loads greater than those anticipated in normal conditions of operation and for uncertainties in design. (See § 4b.200 (a).)

(4) *Load factor.* The load factor is the ratio of a specified load to the total weight of the airplane; the specified load may be expressed in terms of any of the following: aerodynamic forces, inertia forces, or ground or water reactions.

(5) *Limit load factor.* The limit load factor is the load factor corresponding with limit loads.

(6) *Ultimate load factor.* The ultimate load factor is the load factor corresponding with ultimate loads.

(7) *Checked pitching maneuver.* A checked pitching maneuver is one in which the pitching control is suddenly displaced in one direction and then suddenly moved in the opposite direction, the deflections and timing being such as to avoid exceeding the limit maneuvering load factor.

(8) *Design wing area.* The design wing area is the area enclosed by the wing outline (including wing flaps in the retracted position and ailerons, but excluding fillets or fairings) on a surface containing the wing chords. The outline is assumed to be extended through the nacelles and fuselage to the plane of symmetry in any reasonable manner.

(9) *Balancing tail load.* A balancing tail load is that load necessary to place the airplane in equilibrium with zero pitch acceleration.

(10) *Fitting.* A fitting is a part or terminal used to join one structural member to another. (See § 4b.307 (c).)

(f) *Power installation*[1]—(1) *Brake horsepower.* Brake horsepower is the power delivered at the propeller shaft of the engine.

(2) *Take-off power.* Take-off power is the brake horsepower developed under standard sea level conditions, under the maximum conditions of crankshaft rotational speed and engine manifold pressure approved for use in the normal take-off, and limited in use to a maximum continuous period as indicated in the approved engine specification.

(3) *Maximum continuous power.* Maximum continuous power is the brake horsepower developed in standard atmosphere at a specified altitude under the maximum conditions of crankshaft rotational speed and engine manifold pressure approved for use during periods of unrestricted duration.

(4) *Manifold pressure.* Manifold pressure is the absolute pressure measured at the appropriate point in the induction system, usually in inches of mercury.

(5) *Critical altitude.* The critical altitude is the maximum altitude at which in standard atmosphere it is possible to maintain, at a specified rotational speed, a specified power or a specified manifold pressure. Unless otherwise stated, the critical altitude is the maximum altitude at which it is possible to maintain, at the maximum continuous rotational speed, one of the following:

(i) The maximum continuous power, in the case of engines for which this power rating is the same at sea level and at the rated altitude,

(ii) The maximum continuous rated manifold pressure, in the case of engines the maximum continuous power of which is governed by a constant manifold pressure.

(6) *Pitch setting.* Pitch setting is the propeller blade setting determined by the blade angle measured in a manner, and at a radius, specified in the instruction manual for the propeller.

(7) *Feathered pitch.* Feathered pitch is the pitch setting which in flight, with the engines stopped, gives approximately the minimum drag and corresponds with a windmilling torque of approximately zero.

(8) *Reverse pitch.* Reverse pitch is the propeller pitch setting for any blade

[1] For engine airworthiness requirements see Part 13 of this subchapter; for propeller airworthiness requirements see Part 14 of this subchapter.

angle used beyond zero pitch (e. g., the negative angle used for reverse thrust).

(g) *Fire protection*—(1) *Fireproof.* Fireproof material means a material which will withstand heat at least as well as steel in dimensions appropriate for the purpose for which it is to be used. When applied to material and parts used to confine fires in designated fire zones, fireproof means that the material or part will perform this function under the most severe conditions of fire and duration likely to occur in such zones.

(2) *Fire-resistant.* When applied to sheet or structural members, fire-resistant material means a material which will withstand heat at least as well as aluminum alloy in dimensions appropriate for the purpose for which it is to be used. When applied to fluid-carrying lines, other flammable fluid system components, wiring, air ducts, fittings, and powerplant controls, this term refers to a line and fitting assembly, component, wiring or duct, or controls which will perform the intended functions under the heat and other conditions likely to occur at the particular location.

(3) *Flame-resistant.* Flame-resistant material means material which will not support combustion to the point of propagating, beyond safe limits, a flame after the removal of the ignition source.

(4) *Flash-resistant.* Flash-resistant material means material which will not burn violently when ignited.

(5) *Flammable.* Flammable pertains to those fluids or gases which will ignite readily or explode.

(h) *Miscellaneous*—(1) *Supplemental breathing equipment.* Supplemental breathing equipment is equipment designed to supply the supplementary oxygen required to protect against anoxia at altitudes where the partial pressure of oxygen in ambient air is reduced. (See § 4b.651.)

(2) *Protective breathing equipment.* Protective breathing equipment is equipment designed to prevent the breathing of noxious gases which might be present as contaminants in the air within the airplane in emergency situations. (See § 4b.651.)

CERTIFICATION

§ 4b.10 *Eligibility for type certificates.* An airplane shall be eligible for type certification under the provisions of this part if it complies with the airworthiness provisions established by this part or if the Administrator finds that the provision or provisions not complied with are compensated for by factors which provide an equivalent level of safety: *Provided,* That the Administrator finds no feature or characteristic of the airplane which renders it unsafe for the transport category.

§ 4b.11 *Designation of applicable regulations.* (a) The provisions of this part, together with all amendments thereto effective on the date of application for type certificate, shall be considered as incorporated in the type certificate as though set forth in full.

(b) Except as otherwise provided by the Board, or pursuant to § 1.24 of this subchapter by the Administrator, any change to the type design may be accomplished, at the option of the holder of the type certificate, either in accordance with the provisions incorporated by reference in the certificate pursuant to paragraph (a) of this section, or in accordance with the provisions in effect at the time the application for change is filed.

(c) The Administrator, upon approval of a change to a type design, shall designate and keep a record of the provisions of the regulations in this subchapter with which compliance was demonstrated.

§ 4b.12 *Amendment of part.* Unless otherwise established by the Board, an amendment of this part shall be effective with respect to airplanes for which applications for type certificates are filed after the effective date of the amendment.

§ 4b.13 *Type certificate.* (a) An applicant shall be issued a type certificate when he demonstrates the eligibility of the airplane by complying with the requirements of this part in addition to the applicable requirements in Part 1 of this subchapter.

(b) The type certificate shall be deemed to include the type design (see § 4b.14 (b)), the operating limitations for the airplane (see § 4b.700), and any other conditions or limitations prescribed by the regulations in this subchapter. (See also § 4b.11 (a).)

§ 4b.14 *Data required.* (a) The applicant for a type certificate shall submit to the Administrator such descriptive data, test reports, and computations as are necessary to demonstrate that the airplane complies with the requirements of this part.

(b) The descriptive data required in paragraph (a) of this section shall be known as the type design and shall consist of such drawings and specifications as are necessary to disclose the configuration of the airplane and all the design features covered in the requirements of this part, such information on dimensions, materials, and processes as is necessary to define the structural strength of the airplane, and such other data as are necessary to permit by comparison the determination of the airworthiness of subsequent airplanes of the same type.

§ 4b.15 *Inspections and tests.* Inspections and tests shall include all those found necessary by the Administrator to insure that the airplane complies with the applicable airworthiness requirements and conforms to the following:

(a) All materials and products are in accordance with the specifications in the type design,

(b) All parts of the airplane are constructed in accordance with the drawings in the type design,

(c) All manufacturing processes, construction, and assembly are as specified in the type design.

§ 4b.16 *Flight tests.* After proof of compliance with the structural requirements contained in this part, and upon completion of all necessary inspections and testing on the ground, and proof of the conformity of the airplane with the type design, and upon receipt from the applicant of a report of flight tests performed by him, the following shall be conducted:

(a) Such official flight tests as the Administrator finds necessary to determine compliance with the requirements of this part.

(b) After the conclusion of flight tests specified in paragraph (a) of this section, such additional flight tests as the Administrator finds necessary to ascertain whether there is reasonable assurance that the airplane, its components, and equipment are reliable and function properly. The extent of such additional flight tests shall depend upon the complexity of the airplane, the number and nature of new design features, and the record of previous tests and experience for the particular airplane type, its components, and equipment. If practicable, these flight tests shall be conducted on the same airplane used in the flight tests specified in paragraph (a) of this section.

§ 4b.17 *Airworthiness, experimental, and production certificates.* (For requirements with regard to these certificates see Part 1 of this subchapter.)

§ 4b.18 *Approval of materials, parts, processes, and appliances.* (a) Materials, parts, processes, and appliances shall be approved upon a basis and in a manner found necessary by the Administrator to implement the pertinent provisions of the regulations in this subchapter. The Administrator may adopt and publish such specifications as he finds necessary to administer this regulation, and shall incorporate therein such portions of the aviation industry, Federal, and military specifications respecting such materials, parts, processes, and appliances as he finds appropriate.

NOTE: The provisions of this paragraph are intended to allow approval of materials, parts, processes, and appliances under the system of Technical Standard Orders, or in conjunction with type certification procedures for an airplane, or by any other form of approval by the Administrator.

(b) Any material, part, process, or appliance shall be deemed to have met the requirements for approval when it meets the pertinent specifications adopted by the Administrator, and the manufacturer so certifies in a manner prescribed by the Administrator.

§ 4b.19 *Changes in type design.* (For requirements with regard to changes in type design see Part 1 of this subchapter.)

SUBPART B—FLIGHT

GENERAL

§ 4b.100 *Proof of compliance.* (a) Compliance with the requirements prescribed in this subpart shall be established by flight or other tests conducted upon an airplane of the type for which a certificate of airworthiness is sought or by calculations based on such tests, provided that the results obtained by calculations are equivalent in accuracy to the results of direct testing.

(b) Compliance with each requirement shall be established at all appropriate combinations of airplane weight and center of gravity position within the range of loading conditions for which certification is sought by systematic

DOT LIBRARY
FOB 10-A

investigation of all these combinations, except where compliance can be inferred *reasonably from those combinations* which are investigated.

(c) The controllability, stability, trim, and stalling characteristics of the airplane shall be established at all altitudes up to the maximum anticipated operating altitude.

(d) The applicant shall provide a person holding an appropriate pilot certificate to make the flight tests, but a designated representative of the Administrator shall pilot the airplane when it is found necessary for the determination *of compliance with the airworthiness* requirements.

(e) Official type tests shall be discontinued until corrective measures have been taken by the applicant when either:

(1) The applicant's test pilot is unable or unwilling to conduct any of the required flight tests, or

(2) It is found that requirements which have not been met are so substantial as to render additional test data meaningless or are of such a nature as to make further testing unduly hazardous.

(f) Adequate provision shall be made for emergency egress and for the use of parachutes by members of the crew during the flight tests.

(g) The applicant shall submit to the Administrator's representative a report covering all computations and tests required in connection with calibration of instruments used for test purposes and correction of test results to standard atmospheric conditions. The Administrator's representative shall conduct any flight tests which he finds necessary to *check the calibration and correction* report.

§ 4b.101 *Weight limitations.* The maximum and minimum weights at which the airplane will be suitable for operation shall be established as follows:

(a) Maximum weights shall not exceed any of the following:

(1) The weight selected by the applicant;

(2) The design weight for which the structure has been proven;

(3) The maximum weight at which compliance with all of the applicable flight requirements has been demonstrated.

(b) It shall be acceptable to establish maximum weights for each altitude and for each practicably separable operating condition (e. g., take-off, en route, landing).

(c) Minimum weights shall not be less than any of the following:

(1) The minimum weight selected by the applicant;

(2) The design minimum weight for which the structure has been proven;

(3) The minimum weight at which compliance with all of the applicable flight requirements has been demonstrated.

§ 4b.102 *Center of gravity limitations.* Center of gravity limits shall be *established as the most forward* position permissible and the most aft position permissible for each practicably separable operating condition in accordance with § 4b.101 (b). Limits of the center of gravity range shall not exceed any of the following:

(a) *The extremes selected* by the applicant;

(b) The extremes for which the structure has been proven;

(c) The extremes at which compliance with all of the applicable flight requirements has been demonstrated.

§ 4b.103 *Additional limitations on weight distribution.* If a weight and center of gravity combination is permissible only within certain load distribution limits (e. g., spanwise) which could be exceeded inadvertently, such limits shall be established together with the corresponding weight and center of gravity combinations, and shall not exceed any of the following:

*(a) The limits selected by the appli*cant;

(b) The limits for which the structure has been proven;

(c) The limits for which compliance with all the applicable flight requirements has been demonstrated.

§ 4b.104 *Empty weight.* (a) The *empty weight and the corresponding* center of gravity position shall be determined by weighing the airplane. This weight shall exclude the weight of the crew and payload, but shall include the weight of all fixed ballast, unusable fuel supply (see § 4b.416), undrainable oil, total quantity of engine coolant, and total quantity of hydraulic fluid.

(b) The condition of the airplane at the time of weighing shall be one which can be easily repeated and easily defined, particularly as regards the con*tents of the fuel, oil, and coolant tanks,* and the items of equipment installed.

§ 4b.105 *Use of ballast.* It shall be acceptable to use removable ballast to enable the airplane to comply with the flight requirements. (See §§ 4b.738 and 4b.741 (c).)

PERFORMANCE

§ 4b.110 *General.* (a) With respect to all airplanes type certificated on or after February 12, 1951, the performance prescribed in this subpart shall be determined, and compliance shall be shown, for standard atmospheric conditions and still air, except that the performance as affected by engine power, instead of being based on dry air, shall be based on 80 percent relative humidity.

(b) Each set of performance data required for a particular flight condition *shall be determined with the powerplant* accessories absorbing the normal amount of power appropriate to that flight condition. (See also § 4b.117.)

§ 4b.111 *Wing flap positions.* (a) The wing flap positions denoted respectively as the take-off, en route, approach, and landing positions shall be selected by the applicant. (See also § 4b.323.)

(b) It shall be acceptable to make the flap positions variable with weight and altitude.

§ 4b.112 *Stalling speeds.* (a) The speed, V_{s_0}, shall denote the calibrated stalling speed, or the minimum steady flight speed at which the airplane is controllable, in miles per hour, with:

(1) Engines idling, throttles closed (or not more than sufficient power for zero thrust at a speed not greater than 110 percent of the stalling speed);

(2) Propeller pitch controls in the position normally used for take-off;

(3) Landing gear extended;

(4) Wing flaps in the landing position;

(5) Cowl flaps closed;

(6) Center of gravity in the most unfavorable position within the allowable landing range;

(7) The weight of the airplane equal to the weight in connection with which V_{s_0} *is being used as a factor to determine* a required performance.

(b) The speed, V_{s_1}, shall denote the calibrated stalling speed, or the minimum steady flight speed at which the airplane is controllable, in miles per hour, with:

(1) Engines idling, throttles closed (or not more than sufficient power for zero thrust at a speed not greater than 110 percent of the stalling speed);

(2) Propeller pitch controls in the position normally used for take-off, the airplane in all other respects (flaps, *landing gear, etc.) in the particular con*dition existing in the particular test in connection with which V_{s_1} is being used;

(3) The weight of the airplane equal to the weight in connection with which V_{s_1} is being used as a factor to determine a required performance.

(c) Stalling speeds shall be determined by flight tests using the procedures outlined in § 4b.160.

§ 4b.113 *Take-off; general.* (a) The take-off data in §§ 4b.114 to 4b.116, inclusive, shall be determined under the following conditions:

(1) At all weights and altitudes selected by the applicant;

(2) With a constant take-off flap position for the particular weight and altitude;

(3) With the operating engines not exceeding their approved limitations at the particular altitude.

(b) All take-off data, when corrected, shall assume a level take-off surface, and shall be determined on a smooth, dry, hard-surfaced runway, in such a manner that reproduction of the performance does not require exceptional skill or alertness on the part of the pilot. (For temperature accountability data see § 4b.117. For wind and runway gradient corrections see appropriate operating rules of this subchapter.)

§ 4b.114 *Take-off speeds.* (a) The critical-engine-failure speed V_1, in terms of calibrated air speed, shall be selected by the applicant, but it shall not be less than the minimum speed at which the controllability is demonstrated during the take-off run to be adequate to permit proceeding safely with the take-off, using normal piloting skill, when the critical engine is suddenly made inoperative.

(b) The minimum take-off safety speed V_2, in terms of calibrated air speed, shall be selected by the applicant so as to permit the rate of climb required in § 4b.120 (a) and (b), but it shall not be less than:

(1) 1.20 V_{s_1} for two-engine airplanes,

(2) 1.15 V_{s_1} for airplanes having more than two engines,

(3) 1.10 times the minimum control speed V_{MC} established under § 4b.133.

(c) If engine failure is assumed to occur at or after the attainment of V_2, the demonstration in which the take-off run is continued to include the take-off climb, as provided in paragraph (a) of this section, shall not be required.

§ 4b.115 *Accelerate-stop distance.* (a) The accelerate-stop distance shall be the sum of the following:

(1) The distance required to accelerate the airplane from a standing start to the speed V_1,

(2) Assuming the critical engine to fail at the speed V_1, the distance required to bring the airplane to a full stop from the point corresponding with the speed V_1.

(b) In addition to, or in lieu of, wheel brakes, the use of other braking means shall be acceptable in determining the accelerate-stop distance, provided that such braking means shall have been proven to be safe and reliable, that the manner of their employment is such that consistent results can be expected under normal conditions of operation, and that exceptional skill is not required to control the airplane.

(c) The landing gear shall remain extended throughout the accelerate-stop distance.

§ 4b.116 *Take-off path.* The take-off path shall be considered to consist of the following five consecutive elements:

(a) The distance required to accelerate the airplane to the speed V_2, assuming the critical engine to fail at the speed V_1.

(b) The horizontal distance traversed and the height attained by the airplane in the time required to retract the landing gear when operating at the speed V_2 with:

(1) The critical engine inoperative, its propeller:

(i) Windmilling with the propeller control in a position normally used during take-off until (if applicable) its rotation has been stopped (see paragraph (c) (1) of this section),

(ii) If applicable, stopped for the remainder of the gear retraction time.

(2) The landing gear extended.

(c) If applicable, the horizontal distance traversed and the height attained by the airplane in the time elapsed from the end of element (b) until the rotation of the inoperative propeller has been stopped when:

(1) The operation of stopping the propeller is initiated not earlier than the instant the airplane has attained a total height of 50 feet above the take-off surface,

(2) The airplane speed is equal to V_2,

(3) The landing gear is retracted,

(4) The inoperative propeller is windmilling with the propeller control in a position normally used during take-off.

(d) The horizontal distance traversed and the height attained by the airplane in the time elapsed from the end of element (c) until the time limit on the use of take-off power is reached, while operating at the speed V_2, with:

(1) The inoperative propeller stopped,

(2) The landing gear retracted.

(e) The slope of the flight path followed by the airplane in the configuration of element (d), but drawing not more than maximum continuous power on the operating engine(s).

§ 4b.117 *Temperature accountability.* Operating correction factors for take-off weight and take-off distance shall be determined to account for temperatures above and below standard, and when approved by the Administrator they shall be included in the Airplane Flight Manual. These factors shall be obtained as follows:

(a) For any specific airplane type, the average full temperature accountability shall be computed for the range of weights of the airplane, altitudes above sea level, and ambient temperatures required by the expected operating conditions. Account shall be taken of the temperature effect on both the aerodynamic characteristics of the airplane and on the engine power. The full temperature accountability shall be expressed per degree of temperature in terms of a weight correction, a take-off distance correction, and a change, if any, in the critical-engine-failure speed V_1.

(b) The operating correction factors for the airplane weight and take-off distance shall be at least one-half of the full accountability values. The value of V_1 shall be further corrected by the average amount necessary to assure that the airplane can stop within the runway length at the ambient temperature, except that the corrected value of V_1 shall not be less than a minimum at which the airplane can be controlled with the critical engine inoperative.

§ 4b.118 *Climb; general.* Compliance shall be shown with the climb requirements of §§ 4b.119 through 4b.121.

§ 4b.119 *Climb; all engines operating*—(a) *Cruising configuration.* In the cruising configuration the steady rate of climb in feet per minute at 5,000 feet shall not be less than $8V_{s_0}$. In addition the steady rate of climb shall be determined at any altitude at which the airplane is expected to operate and at any weight within the range of weights to be specified in the airworthiness certificate. The cruising configuration shall be with:

(1) Landing gear fully retracted,

(2) Wing flaps in the most favorable position,

(3) Cowl flaps (or other means of controlling the engine cooling) in the position which provides adequate cooling in the hot-day condition,

(4) Center of gravity in the most unfavorable position,

(5) All engines operating within the maximum continuous power limitations,

(6) Maximum take-off weight.

(b) *Landing configuration.* In the landing configuration the steady rate of climb in feet per minute shall not be less than $0.07\ V_{s_0}^2$ at any altitude within the range for which landing weight is to be specified in the certificate, with:

(1) Landing gear extended,

(2) Wing flaps in the landing position (see §§ 4b.111 and 4b.323),

(3) Cowl flaps in the position normally used in an approach to a landing,

(4) Center of gravity in the most unfavorable position permitted for landing,

(5) All engines operating at the take-off power available at such altitude,

(6) The weight equal to maximum landing weight for that altitude.

§ 4b.120 *One-engine-inoperative climb*—(a) *Flaps in take-off position; landing gear extended.* The steady rate of climb without ground effect shall not be less than 50 ft/min. at any altitude within the range for which take-off weight is to be specified in the certificate, with:

(1) Wing flaps in the take-off position (see §§ 4b.111 and 4b.323),

(2) Cowl flaps in the position normally used during take-off,

(3) Center of gravity in the most unfavorable position permitted for take-off,

(4) The critical engine inoperative, its propeller windmilling with the propeller control in a position normally used during take-off,

(5) All other engines operating at the take-off power available at such altitude,

(6) The speed equal to the minimum take-off safety speed V_2 (see § 4b.114 (b)),

(7) The weight equal to maximum take-off weight for that altitude,

(8) Landing gear extended.

(b) *Flaps in take-off position; landing gear retracted.* With the landing gear retracted the steady rate of climb in feet per minute shall not be less than $0.035\ V_{s_1}^2$ with all other conditions as described in paragraph (a) of this section.

(c) *Flaps in en route position.* The steady rate of climb in feet per minute at any altitude at which the airplane is expected to operate, at any weight within the range of weights to be specified in the airworthiness certificate, shall be determined and shall, at a standard altitude of 5,000 feet and at the maximum take-off weight, be at least

$$\left(0.06-\frac{0.08}{N}\right)V_{s_0}^2,$$

where N is the number of engines installed, with:

(1) The landing gear retracted,

(2) Wing flaps in the most favorable position,

(3) Cowl flaps or other means of controlling the engine cooling air supply in the position which provides adequate cooling in the hot-day condition,

(4) Center of gravity in the most unfavorable position,

(5) The critical engine inoperative, its propeller stopped,

(6) All remaining engines operating at the maximum continuous power available at the altitude.

(d) *Flaps in approach position.* The steady rate of climb in feet per minute shall not be less than $0.04\ V_{s_0}^2$ at any altitude within the range for which landing weight is to be specified in the certificate, with:

(1) The landing gear retracted,

(2) Wing flaps set in position such that V_{s_1} does not exceed $1.10\ V_{s_0}$.

(3) Cowl flaps in the position normally used during an approach to a landing,

(4) Center of gravity in the most unfavorable position permitted for landing,

(5) The critical engine inoperative, its propeller stopped,

(6) All remaining engines operating at the take-off power available at such altitude,

(7) The weight equal to the maximum landing weight for that altitude.

§ 4b.121 *Two-engine-inoperative climb.* For airplanes with four or more engines, the steady rate of climb at any altitude at which the airplane is expected to operate, and at any weight within the range of weights to be specified in the Airplane Flight Manual, shall be determined with:

(a) The landing gear retracted,

(b) Wing flaps in the most favorable position,

(c) Cowl flaps or other means of controlling the engine cooling air supply in the position which will provide adequate cooling in the hot-day condition,

(d) Center of gravity in the most unfavorable position,

(e) The two critical engines on one side of the airplane inoperative and their propellers stopped,

(f) All remaining engines operating at the maximum continuous power available at that altitude.

§ 4b.122 *Determination of the landing distance; general.* The horizontal distance required to land and to come to a complete stop (to a speed of approximately 3 m. p. h. for seaplanes or float planes) from a point at a height of 50 feet above the landing surface shall be determined for a range of weights and altitudes selected by the applicant. In making this determination the following conditions shall apply:

(a) A steady gliding approach shall have been maintained down to the 50-foot altitude with a calibrated air speed of not less than 1.3 V_{s_0}.

(b) The nose of the airplane shall not be depressed, nor the forward thrust increased by application of power after reaching the 50-foot altitude.

(c) At all times during and immediately prior to the landing, the flaps shall be in the landing position, except that after the airplane is on the landing surface and the calibrated air speed has been reduced to not more than 0.9 V_{s_0} the flap position may be changed.

(d) The landing shall be made in such manner that there is no excessive vertical acceleration, no tendency to bounce, nose over, ground loop, porpoise, or water loop, and in such manner that its reproduction shall not require any exceptional degree of skill on the part of the pilot, or exceptionally favorable conditions.

§ 4b.123 *Landplanes.* The landing distance referred to in § 4b.122 shall be determined on a dry, hard-surfaced runway in accordance with the following:

(a) The operating pressures on the braking system shall not be in excess of those approved by the manufacturer of the brakes,

(b) The brakes shall not be used in such manner as to produce excessive wear of brakes or tires,

(c) Means other than wheel brakes may be used in determining the landing distance: *Provided,* That:

(1) Exceptional skill is not required to control the airplane,

(2) The manner of their employment is such that consistent results could be expected under normal service, and

(3) They are regarded as reliable.

§ 4b.124 *Seaplanes or float planes.* The landing distance referred to in § 4b.122 shall be determined on smooth water.

§ 4b.125 *Skiplanes.* The landing distance referred to in § 4b.122 shall be determined on smooth, dry snow.

CONTROLLABILITY

§ 4b.130 *Controllability; general.* (a) The airplane shall be safely controllable and maneuverable during take-off, climb, level flight, descent, and landing.

(b) It shall be possible to make a smooth transition from one flight condition to another, including turns and slips, without requiring an exceptional degree of skill, alertness, or strength on the part of the pilot and without danger of exceeding the limit load factor under all conditions of operation probable for the type, including those conditions normally encountered in the event of sudden failure of any engine.

§ 4b.131 *Longitudinal control.* (a) It shall be possible at all speeds between 1.4 V_{s_1} and V_{s_1} to pitch the nose downward so that a prompt recovery to a speed equal to 1.4 V_{s_1} can be made with the following combinations of configuration:

(1) The airplane trimmed at 1.4 V_{s_1},

(2) The landing gear extended,

(3) The wing flaps in a retracted, and in an extended position,

(4) Power off, and maximum continuous power on all engines.

(b) During each of the following controllability demonstrations a change in the trim control, or the exertion of more control force than can be readily applied with one hand for a short period, shall not be required. Each maneuver shall be performed with the landing gear extended.

(1) With power off, flaps retracted, and the airplane trimmed at 1.4 V_{s_1}, the flaps shall be extended as rapidly as possible while maintaining the air speed approximately 40 percent above the stalling speed prevailing at any instant throughout the maneuver.

(2) The maneuver of subparagraph (1) of this paragraph shall be repeated, except that it shall be started with flaps extended and the airplane trimmed at 1.4 V_{s_1}, after which the flaps shall be retracted as rapidly as possible.

(3) The maneuver of subparagraph (2) of this paragraph shall be repeated, except that take-off power shall be used.

(4) With power off, flaps retracted, and the airplane trimmed at 1.4 V_{s_1}, take-off power shall be applied quickly while maintaining the same air speed.

(5) The maneuver of subparagraph (4) of this paragraph shall be repeated, except that the flaps shall be extended.

(6) With power off, flaps extended, and the airplane trimmed at 1.4 V_{s_1}, air speeds within the range of 1.1 V_{s_1} to 1.7 V_{s_1} or to V_{FE}, whichever of the two is the lesser, shall be obtained and maintained.

(c) It shall be possible without the use of exceptional piloting skill to prevent loss of altitude when wing flap retraction from any position is initiated during steady straight level flight at a speed equal to 1.1 V_{s_1} with simultaneous application of not more than maximum continuous power, with the landing gear extended, and with the airplane weight equal to the maximum sea level landing weight. (See also § 4b.323.)

§ 4b.132 *Directional and lateral control*—(a) *Directional control; general.* It shall be possible, while holding the wings approximately level, to execute reasonably sudden changes in heading in either direction without encountering dangerous characteristics. Heading changes up to 15° shall be demonstrated, except that the heading change at which the rudder pedal force is 180 pounds need not be exceeded. The control shall be demonstrated at a speed equal to 1.4 V_{s_1}, under the following conditions:

(1) The critical engine inoperative and its propeller in the minimum drag position,

(2) Power required for level flight at 1.4 V_{s_1}, but not greater than maximum continuous power,

(3) Most unfavorable center of gravity position,

(4) Landing gear retracted,

(5) Wing flaps in the approach position,

(6) Maximum landing weight.

(b) *Directional control; four or more engines.* Airplanes with four or more engines shall comply with paragraph (a) of this section, except that:

(1) The two critical engines shall be inoperative, their propellers in the minimum drag position,

(2) The center of gravity shall be in the most forward position,

(3) The wing flaps shall be in the most favorable climb position.

(c) *Lateral control; general.* It shall be possible to execute 20° banked turns with and against the inoperative engine from steady flight at a speed equal to 1.4 V_{s_1} with:

(1) The critical engine inoperative and its propeller in the minimum drag position,

(2) Maximum continuous power on the operating engines,

(3) Most unfavorable center of gravity position,

(4) Landing gear retracted and extended,

(5) Wing flaps in the most favorable climb position,

(6) Maximum take-off weight.

(d) *Lateral control; four or more engines.* It shall be possible to execute 20° banked turns with and against the inoperative engines from steady flight at a speed equal to 1.4 V_{s_1} with maximum continuous power and with the airplane in the configuration prescribed by paragraph (b) of this section.

§ 4b.133 *Minimum control speed,* V_{MC}. (a) A minimum speed shall be

determined under the conditions specified in this paragraph, so that when the critical engine is suddenly made inoperative at that speed it shall be possible to recover control of the airplane, with the engine still inoperative, and maintain it in straight flight at that speed, either with zero yaw or, at the option of the applicant, with an angle of bank not in excess of 5°. Such speed shall not exceed 1.2 V_{s_1} with:

(1) Take-off or maximum available power on all engines,

(2) Rearmost center of gravity,

(3) Flaps in take-off position,

(4) Landing gear retracted,

(5) Cowl flaps in the position normally used during take-off,

(6) Maximum sea level take-off weight, or such lesser weight as may be necessary to demonstrate V_{MC},

(7) The airplane trimmed for take-off,

(8) The propeller of the inoperative engine windmilling, except that a different position of the propeller shall be acceptable if the specific design of the propeller control makes it more logical to assume the different position,

(9) The airplane airborne and the ground effect negligible.

(b) In demonstrating the minimum speed of paragraph (a) of this section, the rudder force required to maintain control shall not exceed 180 pounds, and it shall not be necessary to throttle the remaining engines.

(c) During recovery of the maneuver of paragraph (a) of this section the airplane shall not assume any dangerous attitude, nor shall it require exceptional skill, strength, or alertness on the part of the pilot to prevent a change of heading in excess of 20° before recovery is complete.

NOTE: Interpretation No. 1 (17 F. R. 2112, Mar. 12, 1952), adopted by the Civil Aeronautics Board, Mar. 7, 1952, provides as follows:

(1) The Board interprets and construes subparagraph (8) of § 4b.133 (a) as requiring the Administrator to accept for the purposes of § 4b.133 a value for the one-engine-inoperative minimum control speed which has been established in accordance with the provisions of that section with the propeller of the inoperative engine feathered: *Provided*, That the airplane involved is equipped with an automatic feathering device acceptable to the Administrator under § 4b.10 for demonstrating compliance with the take-off path and climb requirement of §§ 4b.116 and 4b.120 (a) and (b).

TRIM

§ 4b.140 *General.* The means used for trimming the airplane shall be such that after being trimmed and without further pressure upon, or movement of, either the primary control or its corresponding trim control by the pilot or the automatic pilot, the airplane shall comply with the trim requirements of §§ 4b.141 through 4b.144.

§ 4b.141 *Lateral and directional trim.* The airplane shall maintain lateral and directional trim under the most adverse lateral displacement of the center of gravity within the relevant operating limitations, under all normally expected conditions of operation, including operation at any speed from 1.4 V_{s_1} to 90 percent of the maximum speed in level flight obtained with maximum continuous power.

§ 4b.142 *Longitudinal trim.* The airplane shall maintain longitudinal trim under the following conditions:

(a) During a climb with maximum continuous power at a speed not in excess of 1.4 V_{s_1} with the landing gear retracted and the wing flaps both retracted and in the take-off position,

(b) During a glide with power off at a speed not in excess of 1.4 V_{s_1} with the landing gear extended and the wing flaps both retracted and extended, with the forward center of gravity position approved for landing with the maximum landing weight, and with the most forward center of gravity position approved for landing regardless of weight,

(c) During level flight at any speed from 1.4 V_{s_1} to 90 percent of the maximum speed in level flight obtained with maximum continuous power with the landing gear and wing flaps retracted, and from 1.4 V_{s_1} to V_{LE} with the landing gear extended.

§ 4b.143 *Longitudinal, directional, and lateral trim.* (a) The airplane shall maintain longitudinal, directional, and lateral trim at a speed equal to 1.4 V_{s_1} during climbing flight with the critical engine inoperative, with

(1) The remaining engine(s) operating at maximum continuous power,

(2) Landing gear retracted,

(3) Wing flaps retracted.

(b) In demonstrating compliance with the lateral trim requirement of paragraph (a) of this section, the angle of bank of the airplane shall not be in excess of 5 degrees.

§ 4b.144 *Trim for airplanes with four or more engines.* The airplane shall maintain trim in rectilinear flight at the climb speed, configuration, and power used in establishing the rates of climb in § 4b.121, with the most unfavorable center of gravity position, and at the weight at which the two-engine-inoperative climb is equal to at least 0.01 $V_{s_0}^2$ at an altitude of 5,000 feet.

STABILITY

§ 4b.150 *General.* The airplane shall be longitudinally, directionally, and laterally stable in accordance with §§ 4b.151 through 4b.157. Suitable stability and control "feel" (static stability) shall be required in other conditions normally encountered in service if flight tests show such stability to be necessary for safe operation.

§ 4b.151 *Static longitudinal stability.* In the conditions outlined in §§ 4b.152 through 4b.155, the characteristics of the elevator control forces and friction shall comply with the following:

(a) A pull shall be required to obtain and maintain speeds below the specified trim speed, and a push shall be required to obtain and maintain speeds above the specified trim speed. This criterion shall apply at any speed which can be obtained without excessive control force, except that such speeds need not be greater than the appropriate operating limit speed or need not be less than the minimum speed in steady unstalled flight.

(b) The air speed shall return to within 10 percent of the original trim speed when the control force is slowly released from any speed within the limits defined in paragraph (a) of this section.

(c) The stable slope of stick force curve versus speed shall be such that any substantial change in speed is clearly perceptible to the pilot through a resulting change in stick force.

§ 4b.152 *Stability during landing.* The stick force curve shall have a stable slope, and the stick force shall not exceed 80 pounds at any speed between 1.1 V_{s_1} and 1.8 V_{s_1} with:

(a) Wing flaps in the landing position,

(b) The landing gear extended,

(c) Maximum landing weight,

(d) Throttles closed on all engines,

(e) The airplane trimmed at 1.4 V_{s_1} with throttles closed.

§ 4b.153 *Stability during approach.* The stick force curve shall have a stable slope at all speeds between 1.1 V_{s_1} and 1.8 V_{s_1} with:

(a) Wing flaps in sea level approach position,

(b) Landing gear retracted,

(c) Maximum landing weight,

(d) The airplane trimmed at 1.4 V_{s_1} and with power sufficient to maintain level flight at this speed.

§ 4b.154 *Stability during climb.* The stick force curve shall have a stable slope at all speeds between 85 and 115 percent of the speed at which the airplane is trimmed with:

(a) Wing flaps retracted,

(b) Landing gear retracted,

(c) Maximum take-off weight,

(d) 75 percent of maximum continuous power,

(e) The airplane trimmed at the best rate-of-climb speed, except that the speed need not be less than 1.4 V_{s_1}.

§ 4b.155 *Stability during cruising.*— (a) *Landing gear retracted.* Between 1.3 V_{s_1} and V_{NE} the stick force curve shall have a stable slope at all speeds obtainable with a stick force not in excess of 50 pounds with:

(1) Wing flaps retracted,

(2) Maximum take-off weight,

(3) 75 percent of maximum continuous power,

(4) The airplane trimmed for level flight with 75 percent of the maximum continuous power.

(b) *Landing gear extended.* The stick force curve shall have a stable slope at all speeds between 1.3 V_{s_1} and the speed at which the airplane is trimmed, except that the range of speeds need not exceed that obtainable with a stick force of 50 pounds with:

(1) Wing flaps retracted,

(2) Maximum take-off weight,

(3) 75 percent maximum continuous power, or the power for level flight at the landing gear extended speed, V_{LE}, whichever is the lesser,

(4) The airplane trimmed for level flight with the power specified in subparagraph (3) of this paragraph.

LIBRARY
FEB 10-A

§ 4b.156 *Dynamic longitudinal stability.* Any short period oscillation occurring between stalling speed and maximum permissible speed appropriate to the configuration of the airplane shall be heavily damped with the primary controls free and in a fixed position.

§ 4b.157 *Static directional and lateral stability.* (a) The static directional stability, as shown by the tendency to recover from a skid with rudder free, shall be positive with all landing gear and flap positions and symmetrical power conditions, at all speeds from 1.2 V_{s_1} up to the operating limit speed.

(b) The static lateral stability, as shown by the tendency to raise the low wing in a sideslip with the aileron controls free and with all landing gear and flap positions and symmetrical power conditions, shall:

(1) Be positive at the operating limit speed,

(2) Not be negative at a speed equal to 1.2 V_{s_1}.

(c) In straight steady sideslips (unaccelerated forward slips) the aileron and rudder control movements and forces shall be substantially proportional to the angle of sideslip, and the factor of proportionality shall lie between limits found necessary for safe operation throughout the range of sideslip angles appropriate to the operation of the airplane. At greater angles up to that at which the full rudder control is employed or a rudder pedal force of 180 pounds is obtained, the rudder pedal forces shall not reverse, and increased rudder deflection shall produce increased angles of sideslip. Sufficient bank shall accompany sideslipping to indicate clearly any departure from steady unyawed flight, unless a yaw indicator is provided.

§ 4b.158 *Dynamic directional and lateral stability.* Any short period oscillation occurring between stalling speed and maximum permissible speed appropriate to the configuration of the airplane shall be heavily damped with the primary controls free and in a fixed position.

STALLING CHARACTERISTICS

§ 4b.160 *Stalling; symmetrical power.* (a) Stalls shall be demonstrated with the airplane in straight flight and in banked turns at 30 degrees, both with power off and with power on. In the power-on conditions the power shall be that necessary to maintain level flight at a speed of 1.6 V_{s_1}, where V_{s_1} corresponds with the stalling speed with flaps in the approach position, the landing gear retracted, and maximum landing weight.

(b) The stall demonstration shall be in the following configurations:

(1) Wing flaps and landing gear in any likely combination of positions,

(2) Representative weights within the range for which certification is sought,

(3) The center of gravity in the most adverse position for recovery.

(c) The stall demonstration shall be conducted as follows:

(1) With trim controls adjusted for straight flight at a speed of 1.4 V_{s_1}, the speed shall be reduced by means of the elevator control until it is steady at slightly above stalling speed; after which the elevator control shall be applied at a rate such that the airplane speed reduction does not exceed one mile per hour per second until the airplane is stalled or, if the airplane is not stalled, until the control reaches the stop.

(2) The airplane shall be considered stalled when, at an angle of attack measurably greater than that of maximum lift, the inherent flight characteristics give a clear indication to the pilot that the airplane is stalled.

NOTE: A nose-down pitch or a roll which cannot be readily arrested are typical indications that the airplane is stalled. Other indications, such as marked loss of control effectiveness, abrupt change in control force or motion, characteristic buffeting, or a distinctive vibration of the pilot's controls, may be accepted if found in a particular case to be sufficiently clear.

(3) Recovery from the stall shall be effected by normal recovery techniques, starting as soon as the airplane is stalled.

(d) During stall demonstration it shall be possible to produce and to correct roll and yaw by unreversed use of the aileron and rudder controls up to the moment the airplane is stalled; there shall occur no abnormal nose-up pitching; and the longitudinal control force shall be positive up to and including the stall.

(e) In straight flight stalls the roll occurring between the stall and the completion of the recovery shall not exceed approximately 20 degrees.

(f) In turning flight stalls the action of the airplane following the stall shall not be so violent or extreme as to make it difficult with normal piloting skill to effect a prompt recovery and to regain control of the airplane.

(g) In both the straight flight and the turning flight stall demonstrations it shall be possible promptly to prevent the airplane from stalling and to recover from the stall condition by normal use of the controls.

§ 4b.161 *Stalling; asymmetrical power.* (a) The airplane shall be safely recoverable without applying power to the inoperative engine when stalled with:

(1) The critical engine inoperative,

(3) Flaps and landing gear retracted,

(3) The remaining engines operating up to 75 percent of maximum continuous power, except that the power need not be greater than that at which the wings can be held level laterally with the use of maximum control travel.

(b) It shall be acceptable to throttle back the operating engines during the recovery from the stall.

§ 4b.162 *Stall warning.* Clear and distinctive stall warning shall be apparent to the pilot with sufficient margin to prevent inadvertent stalling of the airplane with flaps and landing gear in all normally used positions, both in straight and in turning flight. It shall be acceptable for the warning to be furnished either through the inherent aerodynamic qualities of the airplane or by a device which will give clearly distinguishable indications under all expected conditions of flight.

NOTE: A stall warning beginning at a speed 7 percent above the stalling speed is normally considered sufficient margin. Other margins may be acceptable depending upon the degree of clarity, duration, and distinctiveness of the warning and upon other characteristics of the airplane evidenced during the approach to the stall.

GROUND HANDLING CHARACTERISTICS

§ 4b.170 *Longitudinal stability and control.* (a) There shall be no uncontrollable tendency for landplanes to nose over in any reasonably expected operating condition or when rebound occurs during landing or take-off.

(b) Wheel brakes shall operate smoothly and shall exhibit no undue tendency to induce nosing over.

(c) When a tail-wheel landing gear is used it shall be possible during the take-off ground run on concrete to maintain any attitude up to thrust line level at 80 percent of V_{s_1}.

§ 4b.171 *Directional stability and control.* (a) There shall be no uncontrollable ground-looping tendency in 90° cross winds of velocity up to 0.2 V_{s_0} at any ground speed at which the airplane is expected to operate.

(b) All landplanes shall be demonstrated to be satisfactorily controllable with no exceptional degree of skill or alertness on the part of the pilot in power-off landings at normal landing speed during which brakes or engine power are not used to maintain a straight path.

(c) Means shall be provided for directional control of the airplane during taxying.

§ 4b.172 *Shock absorption.* The shock absorbing mechanism shall not produce damage to the structure when the airplane is taxied on the roughest ground which it is reasonable to expect the airplane to encounter in normal operation.

§ 4b.173 *Demonstrated cross wind.* There shall be established a cross component of wind velocity at which it has been demonstrated to be safe to take off or land.

WATER HANDLING CHARACTERISTICS

§ 4b.180 *Water conditions.* The most adverse water conditions in which the seaplane has been demonstrated to be safe for take-off, taxying, and alighting shall be established.

§ 4b.181 *Wind conditions.* The following wind velocities shall be established:

(a) A lateral component of wind velocity not less than 0.2V_{s_0} at and below which it has been demonstrated that the seaplane is safe for taking off and alighting under all water conditions in which the seaplane is likely to be operated;

(b) A wind velocity at and below which it has been demonstrated that the seaplane is safe in taxying in all directions, under all water conditions in which the seaplane is likely to be operated.

§ 4b.182 *Control and stability on the water.* (a) In taking off, taxying, and alighting, the seaplane shall not exhibit the following:

(1) Any dangerously uncontrollable porpoising, bouncing, or swinging tendency;

(2) Any submerging of auxiliary floats or sponsons, any immersion of wing tips, propeller blades, or other parts of the seaplane which are not designed to withstand the resulting water loads;

(3) Any spray forming which would impair the pilot's view, cause damage to the seaplane, or result in ingress of an undue quantity of water.

(b) Compliance with paragraph (a) of this section shall be shown under the following conditions:

(1) All water conditions from smooth to the most adverse condition established in accordance with § 4b.180;

(2) All wind and cross-wind velocities, water currents, and associated waves and swells which the seaplane is likely to encounter in operation on water;

(3) All speeds at which the seaplane is likely to be operated on the water;

(4) Sudden failure of the critical engine, occurring at any time while the airplane is operated on water;

(5) All seaplane weights and center of gravity positions within the range of loading conditions for which certification is sought, relevant to each condition of operation.

(c) In the water conditions of paragraph (b) of this section and the corresponding wind conditions the seaplane shall be able to drift for 5 minutes with engines inoperative, aided if necessary by a sea anchor.

MISCELLANEOUS FLIGHT REQUIREMENTS

§ 4b.190 *Flutter and vibration.* (a) All parts of the airplane shall be demonstrated in flight to be free from flutter and excessive vibration under all speed and power conditions appropriate to the operation of the airplane up to at least the minimum value permitted for V_D in § 4b.210 (b) (5). The maximum speeds so demonstrated shall be used in establishing the operating limitations of the airplane in accordance with § 4b.711.

(b) There shall be no buffeting condition in normal flight severe enough to interfere with the control of the airplane, to cause excessive fatigue to the crew, or to cause structural damage.[5] (See also § 4b.308.)

SUBPART C—STRUCTURE

GENERAL

§ 4b.200 *Loads.* Strength requirements of this subpart are specified in terms of limit and ultimate loads. Unless otherwise stated, the specified loads shall be considered as limit loads. In determining compliance with these requirements the following shall be applicable:

(a) The factor of safety shall be 1.5 unless otherwise specified.

(b) Unless otherwise provided, the specified air, ground, and water loads shall be placed in equilibrium with inertia forces, considering all items of mass in the airplane.

(c) All loads shall be distributed in a manner closely approximating or conservatively representing actual conditions.

[5] It is not the intent of this requirement to discourage such stall warning buffeting as does not contradict these provisions.

(d) If deflections under load significantly change the distribution of external or internal loads, the redistribution shall be taken into account.

§ 4b.201 *Strength and deformation.* (a) The structure shall be capable of supporting limit loads without suffering detrimental permanent deformations.

(b) At all loads up to limit loads the deformation shall be such as not to interfere with safe operation of the airplane.

(c) The structure shall be capable of supporting ultimate loads without failure. It shall support the load for at least 3 seconds, unless proof of strength is demonstrated by dynamic tests simulating actual conditions of load application.

(d) Where structural flexibility is such that any rate of load application likely to occur in the operating conditions might produce transient stresses appreciably higher than those corresponding with static loads, the effects of such rate of application shall be considered.

§ 4b.202 *Proof of structure.* (a) Proof of compliance of the structure with the strength and deformation requirements of § 4b.201 shall be made for all critical loading conditions.

(b) Proof of compliance by means of structural analysis shall be acceptable only when the structure conforms to types for which experience has shown such methods to be reliable. In all other cases substantiating tests shall be required.

(c) In all cases certain portions of the structure shall be tested as specified in § 4b.300.

FLIGHT LOADS

§ 4b.210 *General.* Flight load requirements shall be complied with at critical altitudes within the range selected by the applicant, at all weights from the design minimum weight to the design maximum weight, the latter not being less than the design take-off weight, with any practicable distribution of disposable load within prescribed operating limitations stated in the Airplane Flight Manual (see § 4b.740). At all speeds in excess of those corresponding with a Mach number of 0.65, compressibility effects shall be taken into account.

(a) *Flight load factor.* The flight load factors specified in this subpart shall represent the component of acceleration in terms of the gravitational constant. The flight load factor shall be assumed to act normal to the longitudinal axis of the airplane, shall be equal in magnitude, and shall be opposite in direction to the airplane inertia load factor at the center of gravity.

(b) *Design air speeds.* The design air speeds shall be equivalent air speeds (EAS) and shall be chosen by the applicant, except that they shall not be less than the speeds defined in subparagraphs (1) through (5) of this paragraph. Where estimated values of the speeds V_{s_0} and V_{s_1} are used, such estimates shall be conservative.

(1) *Design flap speed, V_F.* The minimum value of the design flap speed shall be equal to 1.4 V_{s_1} or 1.8 V_{s_0}, whichever is the greater, where V_{s_1} is the stalling speed with flaps retracted at the design landing weight, and V_{s_0} is the stalling

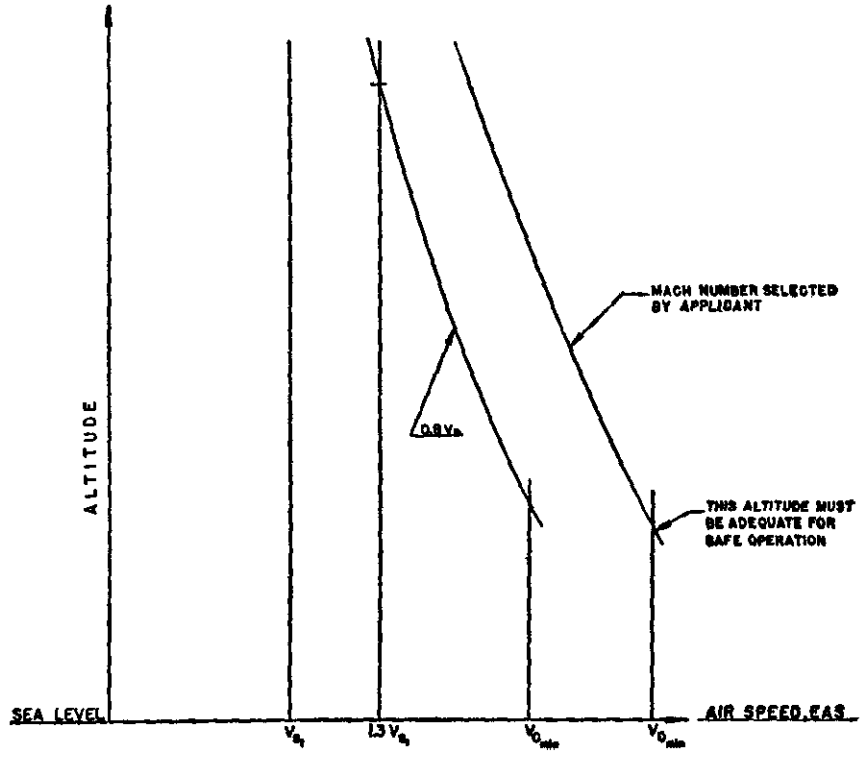

FIGURE 4b-1—Minimum design air speeds vs. altitude.

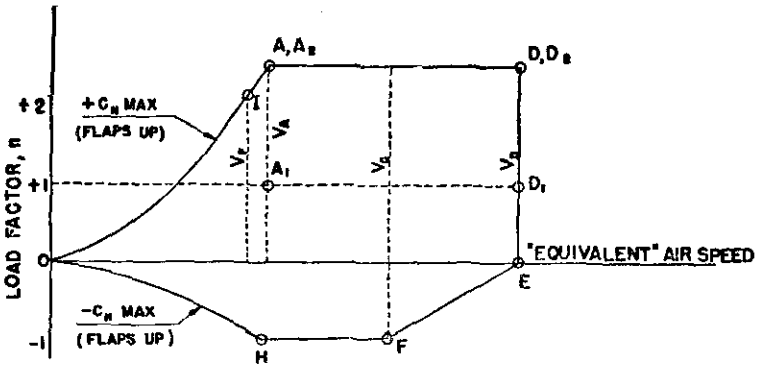

FIGURE 4b–2—Maneuvering envelope.

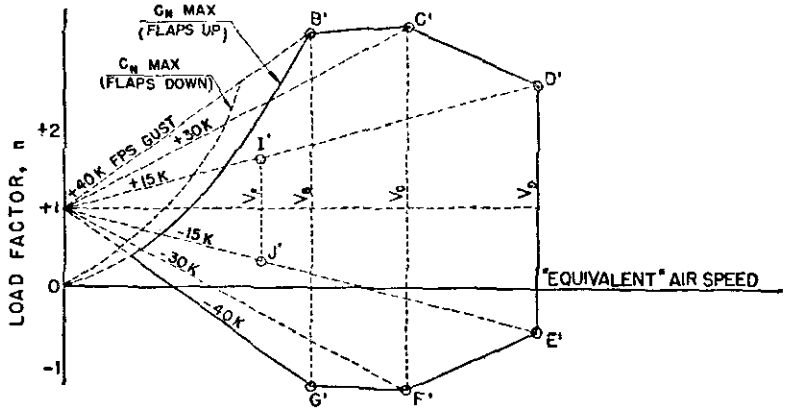

FIGURE 4b–3—Gust envelope.

speed with flaps in the landing position at the design landing weight. (See § 4b.212 (d) regarding automatic flap operation.)

(2) *Design maneuvering speed, V_A.* The design maneuvering speed V_A shall be equal to $V_{s_1}\sqrt{n}$ where n is the limit maneuvering load factor used (see § 4b.211 (a)) and V_{s_1} is the stalling speed with flaps retracted at the design take-off weight. (See fig. 4b–2.)

(3) *Design speed for maximum gust intensity, V_B.* V_B shall be the speed at which the 40 f. p. s. gust line intersects the positive $C_{N\max}$ curve on the gust V–n envelope. (See § 4b.211 (b) and fig. 4b–3.)

(4) *Design cruising speed, V_C.* The minimum design cruising speed V_C shall be sufficiently greater than V_B to provide for inadvertent speed increases likely to occur as a result of severe atmospheric turbulence. In the absence of a rational investigation substantiating the use of other values, V_C shall not be less than V_B+50 (m. p. h.), except that it need not exceed the maximum speed in level flight at maximum continuous power for the corresponding altitude. At altitudes where V_D is limited by Mach number, V_C need not exceed 0.8 V_D, as shown in figure 4b–1, except that it shall not be less than 1.3 V_{s_1} with the flaps retracted at the maximum altitude for which certification is desired.

(5) *Design dive speed V_D.* The minimum design dive speed V_D shall be sufficiently greater than V_C to provide for safe recovery from inadvertent upsets occurring at V_C. In the absence of a rational investigation, the minimum value of V_D shall not be less than 1.25 V_C or V_C+70 (m. p. h.), whichever is the greater, in the altitude range between sea level and an altitude selected by the applicant. At higher altitudes it shall be acceptable to limit V_D to a Mach number selected by the applicant. (See fig. 4b–1.)

§ 4b.211 *Flight envelopes.* The strength requirements shall be met at all combinations of air speed and load factor on and within the boundaries of the V–n diagrams of figures 4b–2 and 4b–3 which represent the maneuvering and gust envelopes. These envelopes shall also be used in determining the airplane structural operating limitations as specified in § 4b.710.

(a) *Maneuvering load factors.* (See fig. 4b–2.) The airplane shall be assumed to be subjected to symmetrical maneuvers resulting in the limit load factors prescribed in subparagraphs (1) and (2) of this paragraph, except where limited by maximum (static) lift coefficients. Pitching velocities appropriate to the corresponding pull-up and steady turn maneuvers shall be taken into account. Lower values of maneuvering load factor shall be acceptable only if it is shown that the airplane embodies features of design which make it impossible to exceed such values in flight.

(1) The positive maneuvering load factor n for any flight speed up to V_D shall be selected by the applicant, except that it shall not be less than 2.5.

(2) The negative maneuvering load factor shall have a minimum value of −1.0 at all speeds up to V_C, and it shall vary linearly with speed from the value at V_C to zero at V_D.

(b) *Gust load factors.* The airplane shall be assumed to be subjected to symmetrical vertical gusts while in level flight. The resulting limit load factors shall correspond with the following conditions:

(1) Positive (up) and negative (down) gusts of 40 f. p. s. nominal intensity at a speed V_B shall be applicable where the positive 40 f. p. s. gust line intersects the positive $C_{N\max}$ curve. If this gust intensity produces load factors greater than those obtained in condition (2) of this paragraph, it shall be acceptable to modify it at altitudes above 20,000 ft. in such a manner as to produce a load factor not less than that obtained in condition (2) of this paragraph.

(2) Positive and negative gusts of 30 f. p. s. shall be considered at V_C.

(3) Positive and negative gusts of 15 f. p. s. shall be considered at V_D.

(4) Gust load factors shall be assumed to vary linearly between the specified conditions as shown on the gust envelope of figure 4b–3.

(5) In the absence of a more rational analysis the gust load factors shall be computed by the following formula:

$$n=1+\frac{KUVa}{575(W/S)};$$

where

$$K=\tfrac{1}{2}\left(\frac{W}{S}\right)^{1/6} \text{ (for } W/S<16 \text{ p. s. f.), or}$$

$$K=1.33-\frac{2.67}{(W/S)^{1/6}} \text{ (for } W/S>16 \text{ p. s. f.),}$$

U=nominal gust velocity (f. p. s.). (Note that the "effective sharp-edged" gust equals KU.)

V=airplane speed (m. p. h.),

W/S=wing loading (p. s. f.),

a=slope of the airplane normal force coefficient curve C_{N_A} per radian if the gust loads are applied to the wings and horizontal tail surfaces simultaneously by a rational method. It shall be acceptable to use the wing lift curve slope C_L per radian when the gust load is applied to the wings only and the horizontal tail gust loads are treated as a separate condition.

§ 4b.212 *Effect of high lift devices.* When flaps or similar high lift devices intended for use at the relatively low air speeds of approach, landing, and take-off are installed, the airplane shall be assumed to be subjected to symmetrical maneuvers and gusts with the flaps in landing position at the design flap speed V_F resulting in limit load factors within the range determined by the following conditions:

(a) Maneuvering to a positive limit load factor of 2.0.

(b) Positive and negative 15 fps nominal intensity gusts acting normal to the flight path in level flight.

(c) In designing flaps and supporting structure on tractor type airplanes, slipstream effects shall be taken into account as specified in § 4b.221. For other than tractor type airplanes a head-on gust of 25 feet per second with no alleviations acting along the flight path shall be considered.

(d) When automatic flap operation is provided, the airplane shall be designed for the speeds and the corresponding flap positions which the mechanism permits. (See § 4b.323.)

§ 4b.213 *Symmetrical flight conditions*—(a) *Procedure of analysis.* In the analysis of symmetrical flight conditions at least those specified in paragraphs (b), (c), and (d) of this section shall be considered. The following procedure of analysis shall be applicable:

(1) A sufficient number of points on the maneuvering and gust envelopes shall be investigated to insure that the maximum load for each part of the airplane structure is obtained. It shall be acceptable to use a conservative combined envelope for this purpose.

(2) All significant forces acting on the airplane shall be placed in equilibrium in a rational or a conservative manner. The linear inertia forces shall be considered in equilibrium with wing and horizontal tail surface loads, while the angular (pitching) inertia forces shall be considered in equilibrium with wing and fuselage aerodynamic moments and horizontal tail surface loads.

(3) Where sudden displacement of a control is specified, the assumed rate of displacement need not exceed that which actually could be applied by the pilot.

(4) In determining elevator angles and chordwise load distribution in the maneuvering conditions of paragraphs (b) and (c) of this section in turns and pull-ups, account shall be taken of the effect of corresponding pitching velocities.

(b) *Maneuvering balanced conditions.* The maneuvering conditions A through I on the maneuvering envelope (fig. 4b–2) shall be investigated, assuming the airplane to be in equilibrium with zero pitching acceleration.

(c) *Maneuvering pitching conditions.* The following conditions on figure 4b–2 involving pitching acceleration shall be investigated:

(1) A_1, *Unchecked pull-up at speed* V_A. The airplane shall be assumed to be flying in steady level flight (point A_1 on fig. 4b–2) and the pitching control suddenly moved to obtain extreme positive pitching (nose up), except as limited by pilot effort, § 4b.220 (a).

(2) A_2, *Checked maneuver at speed* V_A. (i) The airplane shall be assumed to be maneuvered to the positive maneuvering load factor by a checked maneuver from an initial condition of steady level flight (point A_1 on fig. 4b–2). The initial positive pitching portion of this maneuver may be considered to be covered by subparagraph (1) of this paragraph.

(ii) A negative pitching acceleration (nose down) of at least the following value shall be assumed to be attained concurrently with the airplane maneuvering load factor (point A_2 on fig. 4b-2), unless it is shown that a lesser value could not be exceeded:

$$-\frac{30}{V_A}n\ (n-1.5)\ \text{(radians/sec.}^2\text{)}$$

where n is equal to the value of the positive maneuvering load factor as defined by point A_2 on figure 4b–2.

(3) D_1 *and* D_2 *checked maneuver at* V_D. The airplane shall be assumed to be subjected to a checked maneuver from steady level flight (point D_1 on fig. 4b–2) to the positive maneuvering load factor (point D_2 on fig. 4b–2) as follows:

(i) A positive pitching acceleration (nose up), equal to at least the following value, shall be assumed to be attained concurrently with the airplane load factor of unity, unless it is shown that lesser values could not be exceeded:

$$+\frac{45}{V_D}n\ (n-1.5)\ \text{(radians/sec.}^2\text{)}$$

where n is equal to the value of the positive maneuvering load factor as defined by point D_2 on figure 4b–2.

(ii) A negative pitching acceleration (nose down) equal to at least the following value shall be assumed to be attained concurrently with the airplane positive maneuvering load factor (point D_2 on fig. 4b–2), unless it is shown that lesser values could not be exceeded:

$$-\frac{30}{V_D}n\ (n-1.5)\ \text{(radians/sec.}^2\text{)}$$

where n is equal to the value of the positive maneuvering load factor as defined by point D_2 on figure 4b–2.

(d) *Gust conditions.* The gust conditions B' through J' on figure 4b–3 shall be investigated. The following provisions shall apply:

(1) The air load increment due to a specified gust shall be added to the initial balancing tail load corresponding with steady level flight.

(2) It shall be acceptable to include the alleviating effect of wing down-wash and of the airplane's motion in response to the gust in computing the tail gust load increment.

(3) In lieu of a rational investigation of the airplane response it shall be acceptable to apply the gust factor K (see § 4b.211 (b)) to the specified gust intensity for the horizontal tail.

§ 4b.214 *Rolling conditions.* The airplane shall be designed for rolling loads resulting from the conditions specified in paragraphs (a) and (b) of this section. Unbalanced aerodynamic moments about the center of gravity shall be reacted in a rational or a conservative manner considering the principal masses furnishing the reacting inertia forces.

(a) *Maneuvering.* The following conditions, aileron deflection, and speeds, except as the deflections may be limited by pilot effort (see § 4b.220 (a)), shall be considered in combination with an airplane load factor of zero and of two-thirds of the positive maneuvering factor used in the design of the airplane. In determining the required aileron deflections, the torsional flexibility of the wing shall be taken into account in accordance with § 4b.200 (d).

(1) Conditions corresponding with steady rolling velocity shall be investigated. In addition, conditions corresponding with maximum angular acceleration shall be investigated for airplanes having engines or other weight concentrations outboard of the fuselage. For the angular acceleration conditions, it shall be acceptable to assume zero rolling velocity in the absence of a rational time history investigation of the maneuver.

(2) At speed V_A a sudden deflection of the aileron to the stop shall be assumed.

(3) At speed V_G the aileron deflection shall be that required to produce a rate of roll not less than that obtained in condition (2) of this paragraph.

(4) At speed V_D the aileron deflection shall be that required to produce a rate of roll not less than one-third of that in condition (2) of this paragraph.

(b) *Unsymmetrical gusts.* The condition of unsymmetrical gusts shall be considered by modifying the symmetrical flight conditions B' or C' of figure 4b–3, whichever produces the greater load factor. It shall be assumed that 100 percent of the wing air load acts on one side of the airplane, and 80 percent acts on the other side.

§ 4b.215 *Yawing conditions.* The airplane shall be designed for loads resulting from the conditions specified in paragraphs (a) and (b) of this section. Unbalanced aerodynamic moments about the center of gravity shall be reacted in a rational or a conservative manner considering the principal masses furnishing the reacting inertia forces.

(a) *Maneuvering.* At all speeds from V_{MC} to V_A the following maneuvers shall be considered. In computing the tail loads it shall be acceptable to assume the yawing velocity to be zero.

(1) With the airplane in unaccelerated flight at zero yaw, it shall be assumed that the rudder control is suddenly displaced to the maximum deflection as limited by the control stops or by a 300 lb. rudder pedal force, whichever is critical.

(2) With the rudder deflected as specified in subparagraph (1) of this paragraph it shall be assumed that the airplane yaws to the resulting sideslip angle.

(3) With the airplane yawed to the static sideslip angle corresponding with the rudder deflection specified in subparagraph (1) of this paragraph, it shall be assumed that the rudder is returned to neutral.

(b) *Lateral gusts.* The airplane shall be assumed to encounter gusts of 30 f. p. s. nominal intensity normal to the plane of symmetry while in unaccelerated flight at speed V_G. In the absence of a rational investigation of the airplane's response to a true gust, it shall be acceptable to compute the gust loading on the vertical tail surfaces by the following formula:

$$\overline{W}=\frac{KUV_G a}{575}$$

where:

$\overline{W}$ = average limit unit pressure (p. s. f.),

$K=1.33-\left(\frac{W}{S_V}\right)^{\frac{4.5}{3/4}}$; except that K shall not be less than 1.0. A value of K obtained by rational determination shall be acceptable.

U = nominal gust intensity (f. p. s.),

V_G = design cruising speed (m. p. h.),

a = slope of lift curve of the vertical surface C_L per radian corrected for aspect ratio,

W = design take-off weight (lb.),

S_V = vertical surface area (sq. ft.).

§ 4b.216 *Supplementary flight conditions*—(a) *Engine torque effects.* Engine mounts and their supporting structures shall be designed for engine torque effects combined with basic flight conditions as described in subparagraphs (1) and (2) of this paragraph. The limit torque shall be obtained by multiplying the mean torque by a factor of 1.33 in the case of engines having 5 or more cylinders. For 4, 3, and 2-cylinder engines, the factors shall be 2, 3, and 4, respectively.

(1) The limit torque corresponding with take-off power and propeller speed shall act simultaneously with 75 percent of the limit loads from flight condition A (see fig. 4b–2).

(2) The limit torque corresponding with maximum continuous power and propeller speed shall act simultaneously with the limit loads from flight condition A (see fig. 4b–2).

(b) *Side load on engine mount.* The limit load factor in a lateral direction for this condition shall be equal to the maximum obtained in the yawing conditions, but shall not be less than either 1.33 or one-third the limit load factor for flight condition A (see fig. 4b–2). Engine mounts and their supporting structure shall be designed for this condition which may be assumed independent of other flight conditions.

(c) *Pressurized cabin loads.* When pressurized compartments are provided for the occupants of the airplane, the following requirements shall be met. (See § 4b.373.)

(1) The airplane structure shall have sufficient strength to withstand the flight loads combined with pressure differential loads from zero up to the maximum relief valve setting. Account shall be taken of the external pressure distribution in flight.

(2) If landings are to be permitted with the cabin pressurized, landing loads shall be combined with pressure differential loads from zero up to the maximum to be permitted during landing.

(3) The airplane structure shall have sufficient strength to withstand the pressure differential loads corresponding with the maximum relief valve setting multiplied by a factor of 1.33 to provide for such effects as fatigue and stress concentration. It shall be acceptable to omit all other loads in this case.

(4) Where a pressurized cabin is separated into two or more compartments by bulkheads or floor, the primary structure shall be designed for the effects of sudden release of pressure in any compartment having external doors or windows. This condition shall be investigated for the effects resulting from the failure of the largest opening in a compartment. Where intercompartment venting is provided, it shall be acceptable to take into account the effects of such venting.

CONTROL SURFACE AND SYSTEM LOADS

§ 4b.220 *Control surface loads; general.* The control surfaces shall be designed for the limit loads resulting from the flight conditions prescribed in §§ 4b.213 through 4b.215 and the ground gust conditions prescribed in § 4b.226, taking into account the provisions of paragraphs (a) through (e) of this section.

(a) *Effect of pilot effort.* (1) In the control surface flight loading conditions the air loads on the movable surfaces and the corresponding deflections need not exceed those which could be obtained in flight by employing the maximum pilot control forces specified in fig. 4b–5, except that two-thirds of the maximum values specified for the aileron and elevator shall be acceptable when control surface hinge moments are based on reliable data. In applying this criterion, proper consideration shall be given to the effects of servo mechanisms, tabs, and automatic pilot systems in assisting the pilot.

(b) *Effect of trim tabs.* The effect of trim tabs on the main control surface design conditions need be taken into account only in cases where the surface loads are limited by pilot effort in accordance with the provisions of paragraph (a) of this section. In such cases the trim tabs shall be considered to be deflected in the direction which would assist the pilot, and the deflection shall be as follows:

(1) For elevator trim tabs the deflections shall be those required to trim the airplane at any point within the positive portion of the V-n diagram (fig. 4b–2), except as limited by the stops.

(2) For aileron and rudder trim tabs the deflections shall be those required to trim the airplane in the critical unsymmetrical power and loading conditions, with appropriate allowance for rigging tolerances.

(c) *Unsymmetrical loads.* Horizontal tail surfaces and the supporting structure shall be designed for unsymmetrical loads arising from yawing and slipstream effects in combination with the prescribed flight conditions.

NOTE: In the absence of more rational data, the following assumptions may be made for airplanes which are conventional in regard to location of propellers, wings, tail surfaces, and fuselage shape: 100 percent of the maximum loading from the symmetrical flight conditions acting on the surface on one side of the plane of symmetry and 80 percent of this loading on the other side. Where the design is not conventional (e. g., where the horizontal tail surfaces have appreciable dihedral or are supported by the vertical tail surfaces), the surfaces and supporting structures may be designed for combined vertical and horizontal surface loads resulting from the prescribed maneuvers.

(d) *Outboard fins.* (1) When outboard fins are carried on the horizontal tail surface, the tail surfaces shall be designed for the maximum horizontal surface load in combination with the corresponding loads induced on the vertical surfaces by end plate effects. Such induced effects need not be combined with other vertical surface loads.

(2) To provide for unsymmetrical loading when outboard fins extend above and below the horizontal surface, the critical vertical surface loading (load per unit area) as determined by the provisions of this section shall also be applied as follows:

(i) 100 percent to the area of the vertical surfaces above (or below) the horizontal surface, and

(ii) 80 percent to the area below (or above) the horizontal surface.

(e) *Loads parallel to hinge line.* Control surfaces and supporting hinge brackets shall be designed for inertia loads acting parallel to the hinge line.

NOTE: In lieu of a more rational analysis the inertia loads may be assumed to be equal to KW, where:
$K = 24$ for vertical surfaces,
$K = 12$ for horizontal surfaces,
W = weight of the movable surfaces.

§ 4b.221 *Wing flaps.* (a) Wing flaps, their operating mechanism, and supporting structure shall be designed for critical loads prescribed by § 4b.212 with the flaps extended to any position from fully retracted to the landing position.

(b) The effects of propeller slipstream corresponding with take-off power shall be taken into account at an airplane speed of not less than 1.4 V_{s_1}, where V_{s_1} is the stalling speed with flaps as follows: (For automatic flaps see § 4b.212 (d).)

(1) Landing and approach settings at the design landing weight,

(2) Take-off and en route settings at the design take-off weight.

(c) It shall be acceptable to assume the airplane load factor to be equal to 1.0 for investigating the slipstream condition.

§ 4b.222 *Tabs.* The following shall apply to tabs and their installations:

(a) *Trimming tabs.* Trimming tabs shall be designed to withstand loads arising from all likely combinations of tab setting, primary control position, and airplane speed, obtainable without exceeding the flight load conditions prescribed for the airplane as a whole, when the effect of the tab is being opposed by pilot effort loads up to those specified in § 4b.220 (a).

(b) *Balancing tabs.* Balancing tabs shall be designed for deflections consistent with the primary control surface loading conditions.

(c) *Servo tabs.* Servo tabs shall be designed for all deflections consistent with the primary control surface loading conditions achievable within the pilot maneuvering effort (see § 4b.220 (a)) with due regard to possible opposition from the trim tabs.

§ 4b.223 *Special devices.* The loading for special devices employing aerodynamic surfaces, such as slots and spoilers, shall be based on test data.

§ 4b.224 *Primary flight control systems.* Elevator, aileron, and rudder control systems and their supporting structures shall be designed for loads corresponding with 125 percent of the computed hinge moments of the movable control surface in the conditions prescribed in § 4b.220, subject to the following provisions:

(a) The system limit loads, except the loads resulting from ground gusts (§ 4b.226), need not exceed those which can be produced by the pilot or pilots and

by automatic devices operating the controls. Acceptable maximum and minimum pilot loads for elevator, aileron, and rudder controls are shown in figure 4b–5. These pilot loads shall be assumed to act at the appropriate control grips or pads in a manner simulating flight conditions and to be reacted at the attachment of the control system to the control surface horn.

(b) The loads shall in any case be sufficient to provide a rugged system for service use, including considerations of jamming, ground gusts, taxying tail to wind, control inertia, and friction.

§ 4b.225 *Dual primary flight control systems.* (a) When dual controls are provided, the system shall be designed for the pilots operating in opposition, using individual pilot loads equal to 75 percent of those obtained in accordance with § 4b.224, except that the individual pilot loads shall not be less than the minimum loads specified in figure 4b–5.

(b) The control system shall be designed for the pilots acting in conjunction, using individual pilot loads equal to 75 percent of those obtained in accordance with § 4b.224.

§ 4b.226 *Ground gust conditions.* The following conditions intended to simulate the loadings on control surfaces due to ground gusts and when taxying downwind shall be investigated:

(a) The loads in the systems between the stops nearest the surfaces and the cockpit controls need not exceed those corresponding with the maxima of figure 4b–5 for each pilot alone, or with 75 percent of these maxima for each pilot when the pilots act in conjunction.

(b) The control system stops nearest the surfaces, the control system locks, and the portions of the systems, if any, between such stops and locks and the control surface horns shall be designed for limit hinge moments H obtained from the following formula:

$H = KcSq$,

where:

H = limit hinge moment (ft. lbs.),

c = mean chord of the control surface aft of the hinge line (ft.),

S = area of the control surface aft of the hinge line (sq. ft.),

q = dynamic pressure (p. s. f.) based on a design speed not less than $10\sqrt{W/S}+10$ (m. p. h.), except that the design speed need not exceed 60 m. p. h.,

K = factor as specified in figure 4b–4.

§ 4b.227 *Secondary control systems.* Secondary controls, such as wheel brake, spoiler, and tab controls, shall be designed for the loads based on the maximum which a pilot is likely to apply to the control in question. The values of figure 4b–6 are considered acceptable.

Surface	K	Position of controls
(a) Aileron	0.75	Control column locked or lashed in mid-position.
(b) Aileron	*±0.50	Ailerons at full throw.
(c) Elevator	*±0.75	(c) Elevator full down.
(d) Elevator	*±0.75	(d) Elevator full up.
(e) Rudder	0.75	(e) Rudder in neutral.
(f) Rudder	0.75	(f) Rudder at full throw.

*A positive value of K indicates a moment tending to depress the surface, while a negative value of K indicates a moment tending to raise the surface.

FIGURE 4b–4—Limit hinge moment factor for ground gusts.

[Limit pilot loads (one pilot)]

Control	Maximum load	Minimum load
Aileron:		
Stick	100 lbs.	40 lbs.
Wheel*	80 D in. lbs.**	40 D in. lbs.
Elevator:		
Stick	250 lbs.	100 lbs.
Wheel	300 lbs.	100 lbs.
Rudder	300 lbs.	130 lbs.

*The critical portions of the aileron control system shall be designed for a single tangential force having a limit value equal to 1.25 times the couple force determined from these criteria.

**D = wheel diameter.

FIGURE 4b–5—Pilot control force limits (primary controls).

Control	Limit pilot loads
Miscellaneous: *Crank wheel or lever.	$\frac{1+R}{3}\times 50$ lbs., but not less than 50 lbs. nor more than 150 lbs. (R = radius). (Applicable to any angle within 20° of plane of control.)
Twist	133 in. lbs.
Push-pull	To be chosen by applicant.

*Limited to flap, tab, stabilizer, spoiler, and landing gear operating controls.

FIGURE 4b–6—Pilot control force limits (secondary controls).

GROUND LOADS

§ 4b.230 *General.* The limit loads obtained in the conditions specified in §§ 4b.231 through 4b.236 shall be considered as external forces applied to the airplane structure and shall be placed in equilibrium by linear and angular inertia forces in a rational or conservative manner. In applying the specified conditions the provisions of paragraph (a) of this section shall be complied with. In addition, for the landing conditions of §§ 4b.231 through 4b.234 the airplane shall be assumed to be subjected to forces and descent velocities prescribed in paragraph (b) of this section. (The basic landing gear dimensional data are given in figure 4b–7.)

(a) *Center of gravity positions.* The critical center of gravity positions within the certification limits shall be selected so that the maximum design loads in each of the landing gear elements are obtained in the landing and the ground handling conditions.

(b) *Load factors, descent velocities, and design weights for landing conditions.* (1) In the landing conditions the limit vertical inertia load factors at the center of gravity of the airplane shall be chosen by the applicant, except that they shall not be less than the values which would be obtained when landing the airplane with the following limit descent velocities and weights:

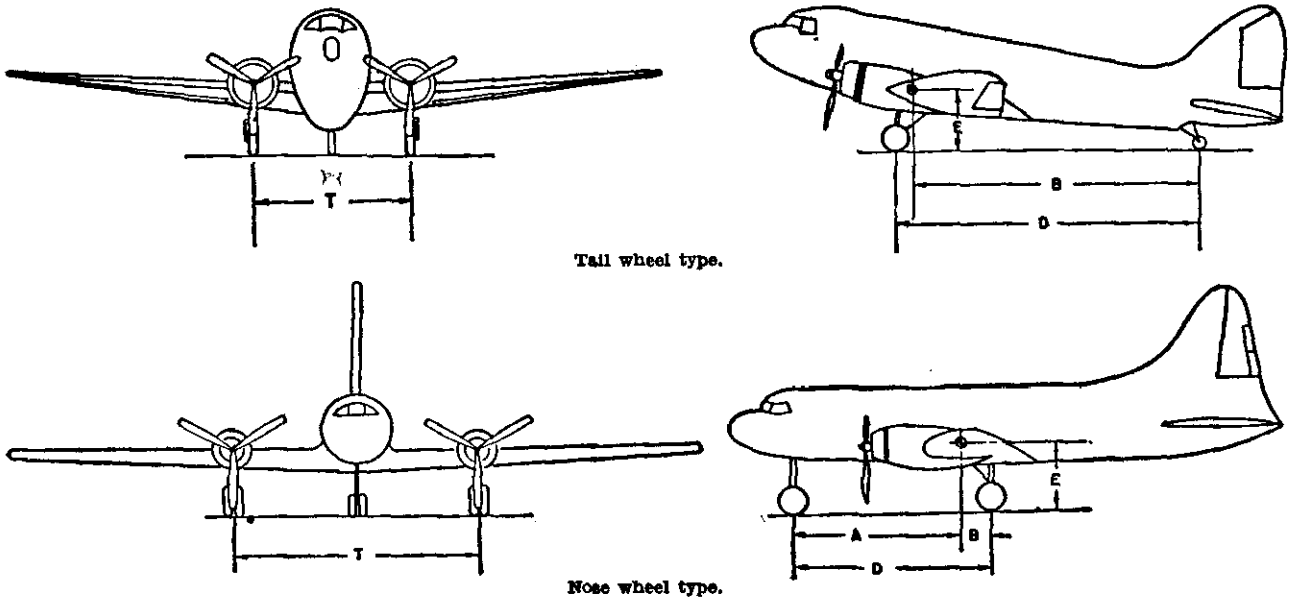

Tail wheel type.

Nose wheel type.

FIGURE 4b–7—Basic landing gear dimension data.

LIBRARY
AGS 10-A

(i) 10 f. p. s. at the design landing weight, and

(ii) 6 f. p. s. at the design take-off weight.

(2) It shall be acceptable to assume a wing lift not exceeding two-thirds of the airplane weight to exist throughout the landing impact and to act through the center of gravity of the airplane.

(3) The provisions of subparagraphs (1) and (2) of this paragraph shall be predicated on conventional arrangements of main and nose gears, or main and tail gears, and on normal operating techniques. It shall be acceptable to modify the prescribed descent velocities if it is shown that the airplane embodies features of design which make it impossible to develop these velocities. (See § 4b.332 (a) for requirements on energy absorption tests which determine the minimum limit inertia load factors corresponding with the required limit descent velocities.)

§ 4b.231 *Level landing conditions*—(a) *General.* In the level attitude the airplane shall be assumed to contact the ground at a forward velocity component parallel to the ground equal to 1.2 V_{s_0} and shall be assumed to be subjected to the load factors prescribed in § 4b.230 (b) (1). The following three combinations of vertical and drag components shall be considered acting at the axle center line:

(1) *Condition of maximum wheel spin-up load.* Drag components simulating the forces required to accelerate the wheel rolling assembly up to the specified ground speed shall be combined with the vertical ground reactions existing at the instant of peak drag loads. A coefficient of friction between the tires and ground need not be assumed to be greater than 0.8. It shall be acceptable to apply this condition only to the landing gear and the directly affected attaching structure.

(2) *Condition of maximum wheel vertical load.* An aft acting drag component not less than 25 percent of the maximum vertical ground reaction shall be combined with the maximum ground reaction of § 4b.230 (b).

(3) *Condition of maximum spring-back load.* Forward-acting horizontal loads resulting from a rapid reduction of the spin-up drag loads shall be combined with the vertical ground reactions at the instant of the peak forward load. It shall be acceptable to apply this condition only to the landing gear and the directly affected structure.

(b) *Level landing; tail-wheel type.* The airplane horizontal reference line shall be assumed to be horizontal. The conditions specified in paragraph (a) of this section shall be investigated (See fig. 4b–8.)

(c) *Level landing; nose-wheel type.* The following airplane attitudes shall be considered: (See fig. 4b–8.)

(1) Main wheels shall be assumed to contact the ground with the nose wheel just clear of the ground. The conditions specified in paragraph (a) of this section shall be investigated.

(2) Nose and main wheels shall be assumed to contact the ground simultaneously. Conditions in this attitude need not be investigated if this attitude cannot reasonably be attained at the specified descent and forward velocities. The conditions specified in paragraph (a) of this section shall be investigated, except that in conditions (a) (1) and (a) (3) it shall be acceptable to investigate the nose and main gear separately neglecting the pitching moments due to wheel spin-up and spring-back loads, while in condition (a) (2) the pitching moment shall be assumed to be resisted by the nose gear.

§ 4b.232 *Tail-down landing conditions.* The following conditions shall be investigated for the load factors obtained in § 4b.230 (b) (1) with the vertical ground reactions applied to the landing gear axles.

(a) *Tail-wheel type.* The main and tail wheels shall be assumed to contact the ground simultaneously. (See fig. 4b–9). Two conditions of ground reaction on the tail wheel shall be assumed to act in the following directions:

(1) Vertical,

(2) Up and aft through the axle at 45° to the ground line.

(b) *Nose-wheel type.* The airplane shall be assumed to be at an attitude corresponding with either the stalling angle or the maximum angle permitting clearance with the ground by all parts of the airplane other than the main wheels, whichever is the lesser. (See fig. 4b–9.)

§ 4b.233 *One-wheel landing condition.* The main landing gear on one side of the airplane center line shall be assumed to contact the ground in the level attitude. (See fig. 4b–10.) The ground reactions on this side shall be the same as those obtained in § 4b.231 (a) (2). The unbalanced external loads shall be reacted by inertia of the airplane in a rational or conservative manner.

§ 4b.234 *Lateral drift landing condition.* (a) The airplane shall be assumed to be in the level attitude with only the main wheels contacting the ground. (See fig. 4b–11.)

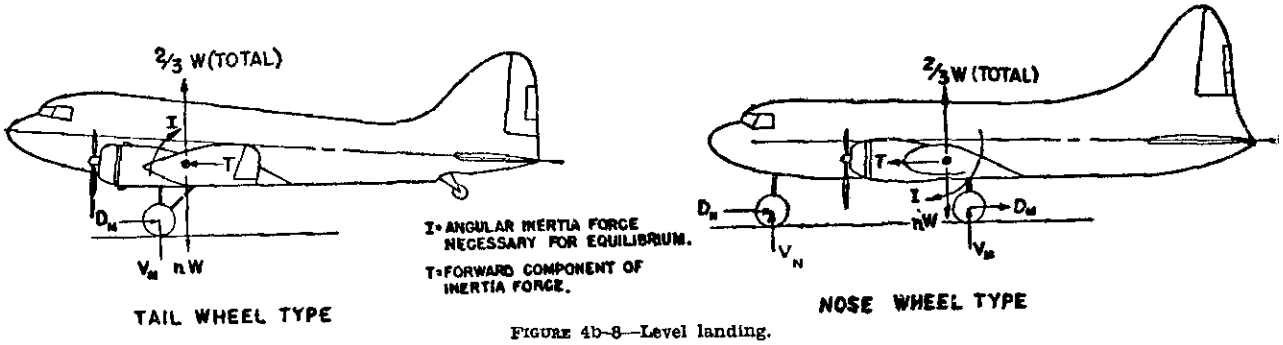

FIGURE 4b–8—Level landing.

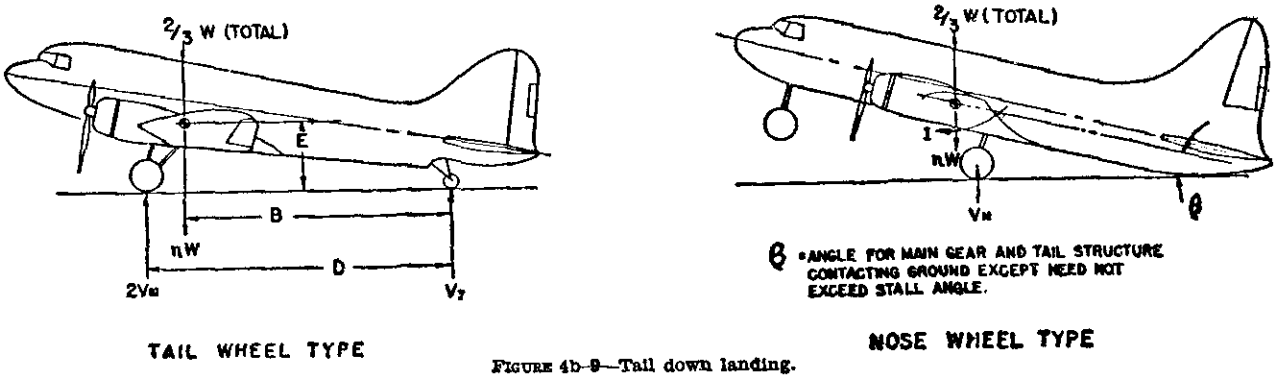

FIGURE 4b–9—Tail down landing.

(b) Side loads of 0.8 of the vertical reaction (on one side) acting inward and 0.6 of the vertical reaction (on the other side) acting outward shall be combined with one-half of the maximum vertical ground reactions obtained in the level landing conditions. These loads shall be assumed to be applied at the ground contact point and to be resisted by the inertia of the airplane. It shall be acceptable to assume the drag loads to be zero.

§ 4b.235 *Ground handling conditions.* The landing gear and airplane structure shall be investigated for the conditions of this section with the airplane at the design take-off weight, unless otherwise prescribed. No wing lift shall be considered. It shall be acceptable to assume the shock absorbers and tires to be deflected to their static position.

(a) *Take-off run.* The landing gear and the airplane structure shall be assumed to be subjected to loads not less than those encountered under conditions described in § 4b.172.

(b) *Braked roll*—(1) *Tail-wheel type.* The airplane shall be assumed to be in the level attitude with all load on the main wheels. The limit vertical load factor shall be 1.2 for the airplane at the design landing weight, and 1.0 for the airplane at the design take-off weight. A drag reaction equal to the vertical reaction multiplied by a coefficient of friction of 0.8 shall be combined with the vertical ground reaction and applied at the ground contact point. (See fig. 4b–12.)

(2) *Nose-wheel type.* The limit vertical load factor shall be 1.2 for the airplane at the design landing weight, and 1.0 for the airplane at the design take-off weight. A drag reaction equal to the vertical reaction multiplied by a coefficient of friction of 0.8 shall be combined with the vertical reaction and applied at the ground contact point of each wheel having brakes. The following two airplane attitudes shall be considered: (See fig. 4b–12.)

(i) The airplane shall be assumed to be in the level attitude with all wheels contacting the ground and the loads distributed between the main and nose gear. Zero pitching acceleration shall be assumed.

(ii) The airplane shall be assumed to be in the level attitude with only the main gear contacting the ground and the pitching moment resisted by angular acceleration.

(c) *Turning.* The airplane in the static position shall be assumed to execute a steady turn by nose gear steering or by application of differential power such that the limit load factors applied at the center of gravity are 1.0 vertically and 0.5 laterally. (See fig. 4b–13.) The side ground reaction of each wheel shall be 0.5 of the vertical reaction.

(d) *Pivoting.* The airplane shall be assumed to pivot about one side of the main gear, the brakes on that side being locked. The limit vertical load factor shall be 1.0 and the coefficient of friction 0.8. The airplane shall be assumed to be in static equilibrium, the loads being applied at the ground contact points. (See fig. 4b–14.)

(e) *Nose-wheel yawing.* (1) A vertical load factor of 1.0 at the airplane center of gravity and a side component at the nose wheel ground contact equal to 0.8 of the vertical ground reaction at that point shall be assumed.

(2) The airplane shall be assumed to be in static equilibrium with the loads resulting from the application of the brakes on one side of the main gear. The vertical load factor at the center of gravity shall be 1.0. The forward acting load at the airplane center of gravity shall be 0.8 times the vertical load on one main gear. The side and vertical loads at the ground contact point on the nose gear shall be those required for static equilibrium. The side load factor at the airplane center of gravity shall be assumed to be zero.

(f) *Tail-wheel yawing.* (1) A vertical ground reaction equal to the static load on the tail wheel in combination with a side component of equal magnitude shall be assumed.

(2) When a swivel is provided, the tail wheel shall be assumed to be swiveled 90° to the airplane longitudinal axis with the resultant load passing through the axle. When a lock, steering device, or shimmy damper is provided, the tail wheel shall also be assumed to be in the trailing position with the side load acting at the ground contact point.

§ 4b.236 *Unsymmetrical loads on dual-wheel units.* In dual-wheel units 60 percent of the total ground reaction for the unit shall be applied to one wheel and 40 percent to the other. To provide for the case of one flat tire, 60 percent of the load which would be assigned to the unit in the specified conditions shall be applied to either wheel, except that the vertical ground reaction shall not be less than the full static value.

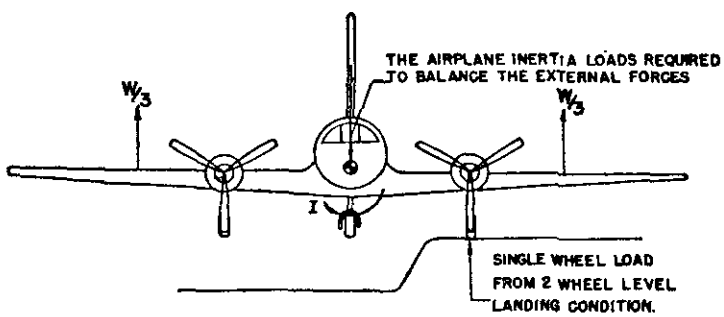

NOSE OR TAIL WHEEL TYPE

FIGURE 4b–10—One wheel landing.

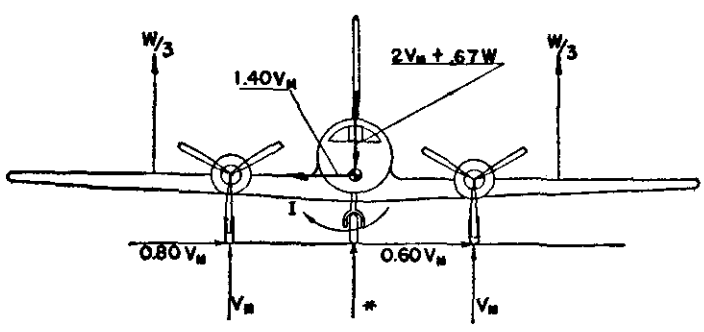

NOSE OR TAIL WHEEL TYPE AIRPLANE IN LEVEL ALTITUDE

FIGURE 4b–11—Lateral drift landing.

WATER LOADS

§ 4b.250 *General.* The structure of hull and float type seaplanes shall be designed for water loads developed during take-off and landing with the seaplane in any attitude likely to occur in normal operation at appropriate forward and sinking velocities under the most severe sea conditions likely to be encountered. Unless a more rational analysis of the water loads is performed, the requirements of §§ 4b.251 through 4b.258 shall apply.

§ 4b.251 *Design weights and center of gravity positions*—(a) *Design weights.* The water load requirements shall be complied with at all operating weights up to the design landing weight except that for the take-off condition prescribed in § 4b.255 the design take-off weight shall be used.

(b) *Center of gravity positions.* The critical center of gravity positions within the limits for which certification is sought shall be considered to obtain maximum design loads for each part of the seaplane structure.

§ 4b.252 *Application of loads.* (a) The seaplane as a whole shall be assumed to be subjected to the loads corresponding with the load factors specified

in § 4b.253, except as otherwise prescribed. In applying the loads resulting from the load factors prescribed in § 4b.253, it shall be permissible to distribute the loads over the hull bottom in order to avoid excessive local shear loads and bending moments at the location of water load application, using pressures not less than those prescribed in § 4b.256 (b).

(b) For twin float seaplanes, each float shall be treated as an equivalent hull on a fictitious seaplane having a weight equal to one-half the weight of the twin float seaplane.

(c) Except in the take-off condition of § 4b.255, the aerodynamic lift on the seaplane during the impact shall be assumed to be ⅔ of the weight of the seaplane.

§ 4b.253 *Hull and main float load factors.* Water reaction load factors shall be computed as follows:

For the step landing case:

$$n_W = \frac{C_1 V_{s_0}^2}{\tan^{2/3}\beta W^{1/3}};$$

For the bow and stern landing cases:

$$n_W = \frac{C_1 V_{s_0}^2}{\tan^{2/3}\beta W^{1/3}} \times \frac{K_1}{(1+r_x^2)^{2/3}};$$

where:

n_W=water reaction load factor (water reaction divided by the seaplane weight);

C_1=empirical seaplane operations factor equal to 0.009, except that this factor shall not be less than that necessary to obtain the minimum value of step load factor of 2.33;

V_{s_0}=seaplane stalling speed (mph) with landing flaps extended in the appropriate position and with no slipstream effect;

β=angle of dead rise at the longitudinal station at which the load factor is being determined (see fig. 4b–15a);

W=seaplane design landing weight in pounds;

K_1=empirical hull station weighing factor. (See fig. 4b–15b.) For a twin float seaplane, in recognition of the effect of flexibility of the attachment of the floats to the seaplane, it shall be acceptable to reduce the factor K_1 at the bow and stern to 0.8 of the value shown in figure 4b-15b. This reduction shall not apply to the float design but only to the design of the carry-through and seaplane structure;

r_x=ratio of distance, measured parallel to hull reference axis, from the center of gravity of the seaplane to the hull longitudinal station at which the load factor is being computed to the radius of gyration in pitch of the seaplane, the hull reference axis being a straight line, in the plane of symmetry, tangential to the keel at the main step.

§ 4b.254 *Hull and main float landing conditions*—(a) *Symmetrical step landing.* The limit water reaction load factor shall be in accordance with § 4b.253. The resultant water load shall be applied at the keel through the center of gravity perpendicularly to the keel line.

(b) *Symmetrical bow landing.* The limit water reaction load factor shall be in accordance with § 4b.253. The resultant water load shall be applied at the keel ⅕ of the longitudinal distance from the bow to the step, and shall be directed perpendicularly to the keel line.

(c) *Symmetrical stern landing.* The limit water reaction load factor shall be in accordance with § 4b.253. The resultant water load shall be applied at the keel at a point 85 percent of the longitudinal distance from the step to the stern post, and shall be directed perpendicularly to the keel line.

(d) *Unsymmetrical landing; hull type and single float seaplanes.* Unsymmetrical step, bow, and stern landing conditions shall be investigated. The loading for each condition shall consist of an upward component and a side component equal, respectively, to 0.75 and 0.25 tan β times the resultant load in the corresponding symmetrical landing condition. (See paragraphs (a), (b), and (c) of this section.) The point of application and direction of the upward component of the load shall be the same as that in the symmetrical condition, and the point of application of the side component shall be at the same longitudinal station as the upward component but directed inward perpendicularly to the plane of symmetry at a point midway between the keel and chine lines.

(e) *Unsymmetrical landing; twin float seaplanes.* The unsymmetrical loading shall consist of an upward load at the step of each float of 0.75 and a side load of 0.25 tan β at one float times the step landing load obtained in accordance with § 4b.253. The side load shall be directed inboard perpendicularly to the plane of symmetry midway between the keel and chine lines of the float at

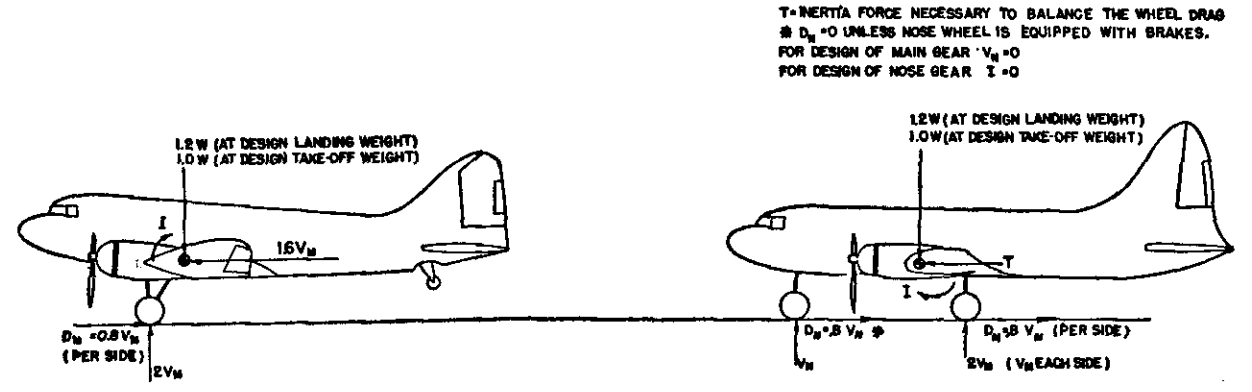

FIGURE 4b–12—Braked roll.

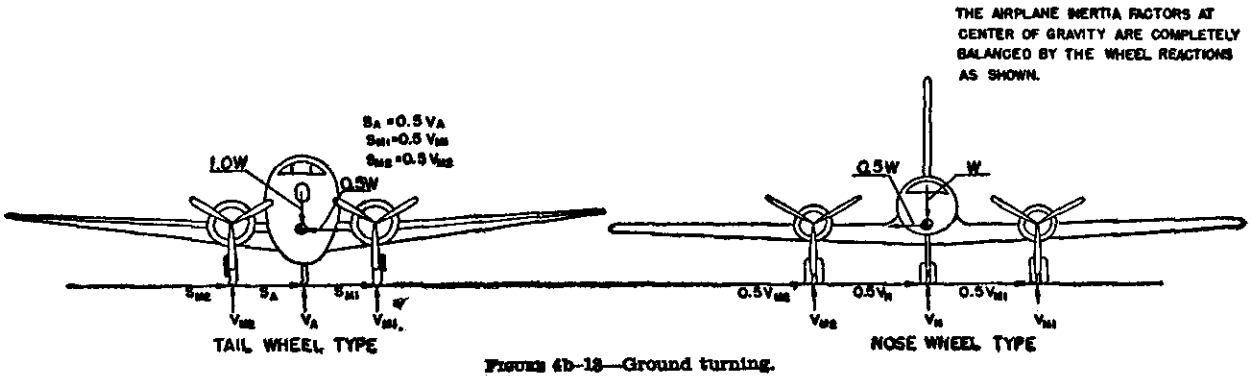

FIGURE 4b–13—Ground turning.

the same longitudinal station as the upward load.

§ 4b.255 *Hull and main float take-off condition.* The provisions of this section shall apply to the design of the wing and its attachment to the hull or main float. The aerodynamic wing lift shall be assumed to be zero. A downward inertia load shall be applied and shall correspond with the following load factor:

$$n=\frac{C_{TO}\ V_{s_1}^{\ 2}}{\tan^{2/3}\beta W^{1/3}};$$

where:

n= inertia load factor;
C_{TO}= empirical seaplane operations factor equal to 0.003;
V_{s_1}= seaplane stalling speed (mph) at the design take-off weight with the flaps extended in the appropriate take-off position;
β= angle of dead rise at the main step (degrees);
W= seaplane design take-off weight in pounds.

§ 4b.256 *Hull and main float bottom pressures.* The provisions of this section shall apply to the design of the hull and main float structure, including frames and bulkheads, stringers, and bottom plating. In the absence of more rational data, the pressures and distributions shall be as follows:

(a) *Local pressures.* The following pressure distributions are applicable for the design of the bottom plating and stringers and their attachments to the supporting structure. The area over which these pressures are applied shall be such as to simulate pressures occurring during high localized impacts on the hull or float, and need not extend over an area which would induce critical stresses in the frames or in the overall structure:

(1) *Unflared bottom.* The pressure at the keel (psi) shall be computed as follows:

$$P_k=C_2\frac{K_2\ V_{s_1}^{\ 2}}{\tan\beta_k};$$

where:

P_k= pressure at the keel;
C_2= 0.0016;
K_2= hull station weighing factor (see fig. 4b–15b);
V_{s_1}=seaplane stalling speed (mph) at the design take-off weight with flaps extended in the appropriate take-off position;
β_k= angle of dead rise at keel (see fig. 4b–15a).

The pressure at the chine shall be 0.75 P_k, and the pressures between the keel and chine shall vary linearly. (See fig. 4b–15c.)

(2) *Flared bottom.* The pressure distribution for a flared bottom shall be that for an unflared bottom prescribed in subparagraph (1) of this paragraph, except that the pressure at the chine shall be computed as follows:

$$P_{ch}=C_3\frac{K_2\ V_{s_1}^{\ 2}}{\tan\beta};$$

where:

P_{ch}= pressure at the chine;
C_3= 0.0012;
K_2= hull station weighing factor (see fig. 4b–15b);
V_{s_1}=seaplane stalling speed (mph) at the design take-off weight with flaps extended in the appropriate take-off position;
β= angle of dead rise at appropriate station.

The pressure at the beginning of the flare shall be the same as for an unflared bottom, and the pressure between the chine and the beginning of the flare shall vary linearly. (See fig. 4b–15c.)

(b) *Distributed pressures.* The following distributed pressures are applicable for the design of the frames, keel, and chine structure. These pressures shall be uniform and shall be applied simultaneously over the entire hull or main float bottom. The loads so obtained shall be carried into the sidewall structure of the hull proper, but need not be transmitted in a fore and aft direction as shear and bending loads.

(1) *Symmetrical.* The symmetrical pressures shall be computed as follows:

$$P=C_4\frac{K_2\ V_{s_0}^{\ 2}}{\tan\beta};$$

where:

P=pressure;
C_4=0.078C_1 (for C_1 see § 4b.253);
K_2=hull station weighing factor (see fig. 4b–15b);
V_{s_0}=seaplane stalling speed (mph) with landing flaps extended in the appropriate position and with no slipstream effect;
β=angle of dead rise at appropriate station.

(2) *Unsymmetrical.* The unsymmetrical pressure distribution shall consist of the pressures prescribed in subparagraph (1) of this paragraph on one side of the hull or main float center line and one-half of that pressure on the other side of the hull or main float center line. (See fig. 4b–15c.)

§ 4b.257 *Auxiliary float loads.* Auxiliary floats, their attachments, and supporting structure shall be designed for the following conditions. In the cases specified in paragraphs (a), (b), (c), and (d) of this section it shall be acceptable to distribute the prescribed water loads over the float bottom to avoid excessive local loads, using bottom pressures not less than those prescribed in paragraph (f) of this section.

(a) *Step loading.* The resultant water load shall be applied in the plane of symmetry of the float at a point three-fourths of the distance from the bow to the step and shall be perpendicular to the keel. The resultant limit load shall be computed as follows, except that the value of L need not exceed three

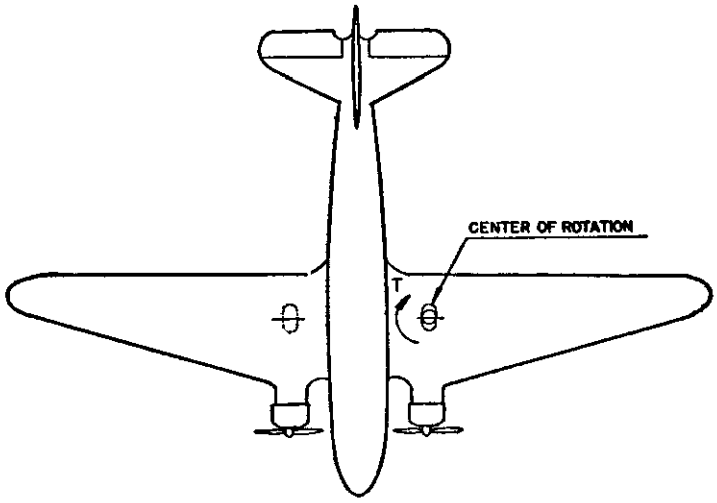

V_M AND V_M ARE STATIC GROUND REACTIONS. FOR TAIL WHEEL TYPE THE AIRPLANE IS IN THE THREE POINT ATTITUDE. PIVOTING IS ASSUMED TO TAKE PLACE ABOUT ONE MAIN LANDING GEAR UNIT.

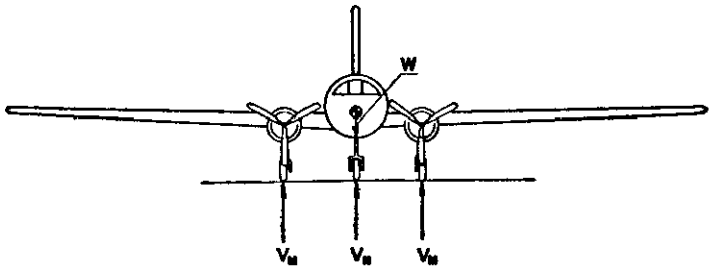

Figure 4b–14—Pivoting, nose or tail wheel type.

times the weight of the displaced water when the float is completely submerged:

$$L = \frac{C_1 \, V_{s_0}{}^2 \, W^{2/3}}{\tan^{2/3}\beta_s \, (1+r_y{}^2)^{2/3}};$$

where:

L = limit load;
C_1 = 0.004;
V_{s_0} = seaplane stalling speed (mph) with landing flaps extended in the appropriate position and with no slipstream effect;
W = seaplane design landing weight in pounds;
β_s = angle of dead rise at a station ¾ of the distance from the bow to the step, but need not be less than 15 degrees;
r_y = ratio of the lateral distance between the center of gravity and the plane of symmetry of the float to the radius of gyration in roll.

(b) *Bow loading.* The resultant limit load shall be applied in the plane of symmetry of the float at a point one-fourth of the distance from the bow to the step and shall be perpendicular to the tangent to the keel line at that point. The magnitude of the resultant load shall be that specified in paragraph (a) of this section.

(c) *Unsymmetrical step loading.* The resultant water load shall consist of a component equal to 0.75 times the load specified in paragraph (a) of this section and a side component equal to 0.25 tan β times the load specified in paragraph (a) of this section. The side load shall be applied perpendicularly to the plane of symmetry of the float at a point midway between the keel and the chine.

(d) *Unsymmetrical bow loading.* The resultant water load shall consist of a component equal to 0.75 times the load specified in paragraph (b) of this section and a side component equal to 0.25 tan β times the load specified in paragraph (b) of this section. The side load shall be applied perpendicularly to the plane of symmetry at a point midway between the keel and the chine.

(e) *Immersed float condition.* The resultant load shall be applied at the centroid of the cross section of the float at a point one-third of the distance from the bow to the step. The limit load components shall be as follows:

$$\text{vertical} = \rho g V$$

$$\text{aft} = C_x \frac{\rho}{2} V^{2/3} \, (K V_{s_0})^2$$

$$\text{side} = C_y \frac{\rho}{2} V^{2/3} \, (K V_{s_0})^2$$

where:

ρ = mass density of water;
V = volume of float;
C_x = coefficient of drag force, equal to 0.10;
C_y = coefficient of side force, equal to 0.08;
K = 0.8, except that lower values shall be acceptable if it is shown that the floats are incapable of submerging at a speed of 0.8 V_{s_0} in normal operations;
V_{s_0} = seaplane stalling speed (mph) with landing flaps extended in the appropriate position and with no slipstream effect.

(f) *Float bottom pressures.* The float bottom pressures shall be established in accordance with § 4b.256 (a) and (b). The angle of dead rise to be used in determining the float bottom pressures shall be as defined in paragraph (a) of this section.

§ 4b.258 *Seawing loads.* Seawing design loads shall be based on applicable test data.

EMERGENCY LANDING CONDITIONS

§ 4b.260 *General.* The following requirements deal with emergency conditions of landing on land or water in which the safety of the occupants shall be considered, although it is accepted that parts of the airplane may be damaged.

(a) The structure shall be designed to give every reasonable probability that all of the occupants, if they make proper use of the seats, belts, and other provisions made in the design (see § 4b.358), will escape serious injury in the event of a minor crash landing (with wheels up if the airplane is equipped with retractable landing gear) in which the occupants experience the following ultimate inertia forces relative to the surrounding structure:

(1) Upward ..... 2.0g (Downward.. 4.5g)
(2) Forward..... 9.0g
(3) Sideward.... 1.5g

(b) The use of a lesser value of the downward inertia force specified in paragraph (a) of this section shall be acceptable if it is shown that the airplane structure can absorb the landing loads corresponding with the design landing weight and an ultimate descent velocity of 5 f. p. s. without exceeding the value chosen.

(c) The inertia forces specified in paragraph (a) of this section shall be applied to all items of mass which would be apt to injure the passengers or crew if such items became loose in the event of a minor crash landing, and the supporting structure shall be designed to restrain these items.

§ 4b.261 *Structural ditching provisions.* (For structural strength considerations of ditching provisions see § 4b.361 (c).)

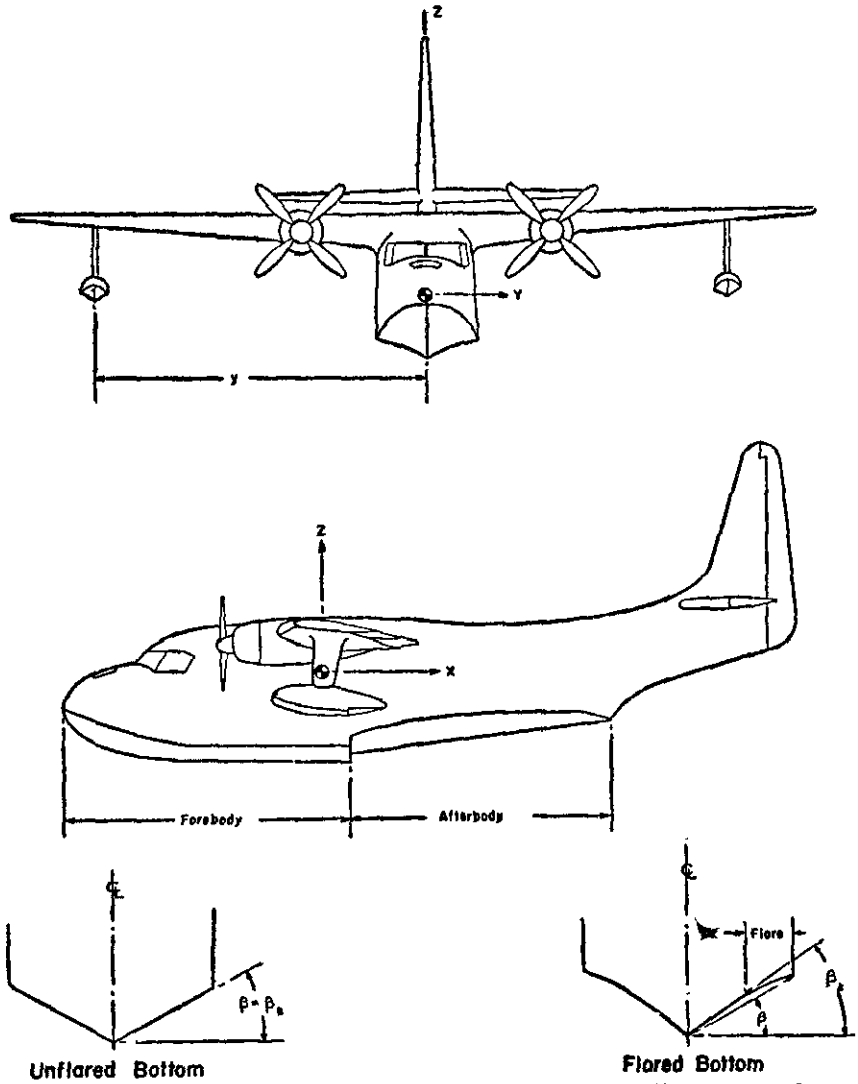

FIGURE 4b–15a—Pictorial definition of angles, dimensions, and directions on a seaplane.

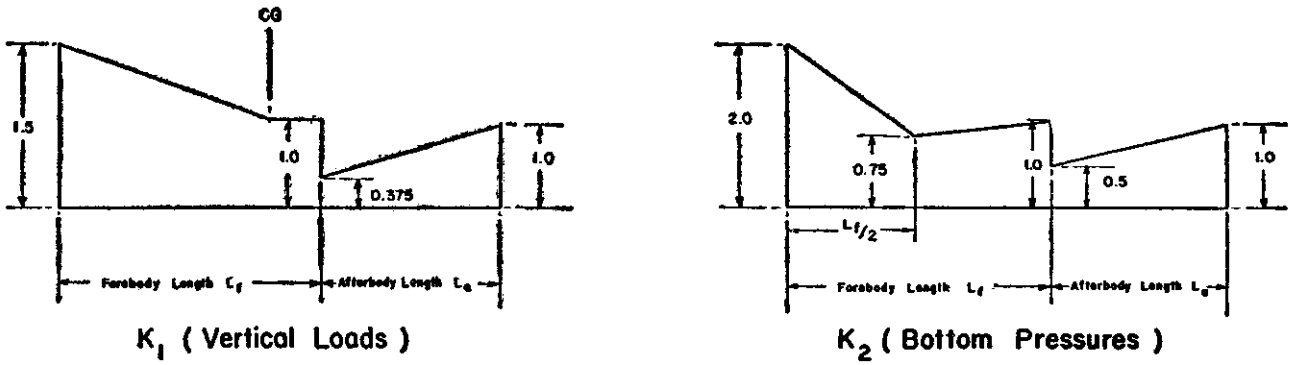

FIGURE 4b–15b—Hull station weighing factor.

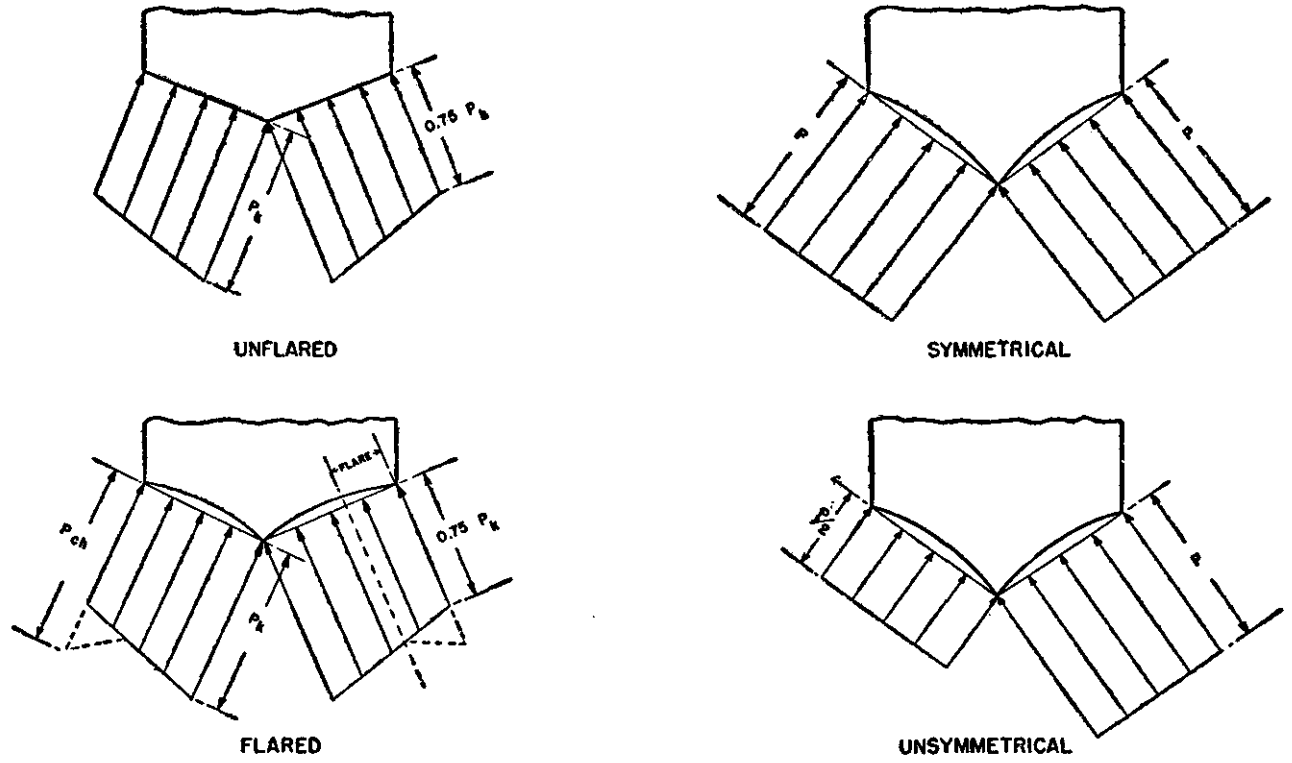

FIGURE 4b–15c—Transverse pressure distributions.

SUBPART D—DESIGN AND CONSTRUCTION

GENERAL

§ 4b.300 *Scope.* The airplane shall not incorporate design features or details which experience has shown to be hazardous or unreliable. The suitability of all questionable design details or parts shall be established by tests.

§ 4b.301 *Materials.* The suitability and durability of all materials used in the airplane structure shall be established on the basis of experience or tests. All materials used in the airplane structure shall conform to approved specifications which will insure their having the strength and other properties assumed in the design data.

§ 4b.302 *Fabrication methods.* The methods of fabrication employed in constructing the airplane structure shall be such as to produce a consistently sound structure. When a fabrication process such as gluing, spot welding, or heat treating requires close control to attain this objective, the process shall be performed in accordance with an approved process specification.

§ 4b.303 *Standard fastenings.* All bolts, pins, screws, and rivets used in the structure shall be of an approved type. The use of an approved locking device or method is required for all such bolts, pins, and screws. Self-locking nuts shall not be used on bolts which are subject to rotation in operation.

§ 4b.304 *Protection.* (a) All members of the structure shall be suitably protected against deterioration or loss of strength in service due to weathering, corrosion, abrasion, or other causes.

(b) Provision for ventilation and drainage of all parts of the structure shall be made where necessary for protection.

(c) In seaplanes, special precautions shall be taken against corrosion from salt water, particularly where parts made from different metals are in close proximity.

§ 4b.305 *Inspection provisions.* Means shall be provided to permit the close examination of those parts of the airplane which require periodic inspec-

tion, adjustment for proper alignment and functioning, and lubrication of moving parts.

§ 4b.306 *Material strength properties and design values.* (a) Material strength properties shall be based on a sufficient number of tests of material conforming to specifications to establish design values on a statistical basis.

(b) The design values shall be so chosen that the probability of any structure being understrength because of material variations is extremely remote.

(c) ANC–5, ANC–18, and ANC–23, Part II values shall be used unless shown to be inapplicable in a particular case.

NOTE: ANC–5, "Strength of Metal Aircraft Elements," ANC–18, "Design of Wood Aircraft Structures," and ANC–23, "Sandwich Construction for Aircraft," are published by the Subcommittee on Air Force-Navy-Civil Aircraft Design Criteria, and may be obtained from the Superintendent of Documents, Government Printing Office, Washington 25, D. C.

(d) The strength, detail design, and fabrication of the structure shall be such as to minimize the probability of disastrous fatigue failure.

NOTE: Points of stress concentration are one of the main sources of fatigue failure.

§ 4b.307 *Special factors.* Where there is uncertainty concerning the actual strength of a particular part of the structure, or where the strength is likely to deteriorate in service prior to normal replacement of the part, or where the strength is subject to appreciable variability due to uncertainties in manufacturing processes and inspection methods, the factor of safety prescribed in § 4b.200 (a) shall be multiplied by a special factor of a value such as to make the probability of the part being understrength from these causes extremely remote. The following special factors shall be used:

(a) *Casting factors.* (1) Where only visual inspection of a casting is to be employed, the casting factor shall be 2.0, except that it need not exceed 1.25 with respect to bearing stresses.

(2) It shall be acceptable to reduce the factor of 2.0 specified in subparagraph (1) of this paragraph to a value of 1.25 if such a reduction is substantiated by testing at least three sample castings and if the sample castings as well as all production castings are visually and radiographically inspected in accordance with an approved inspection specification. During these tests the samples shall withstand the ultimate load multiplied by the factor of 1.25 and in addition shall comply with the corresponding limit load multiplied by a factor of 1.15.

(3) Casting factors other than those contained in subparagraphs (1) and (2) of this paragraph shall be acceptable if they are found to be appropriately related to tests and to inspection procedures.

(4) A casting factor need not be employed with respect to the bearing surface of a part if the bearing factor used (see paragraph (b) of this section) is of greater magnitude than the casting factor.

(b) *Bearing factors.* (1) Bearing factors shall be used of sufficient magnitude to provide for the effects of normal relative motion between parts and in joints with clearance (free fit) which are subject to pounding or vibration. (Bearing factor values for control surface and system joints are specified in §§ 4b.313 (a) and 4b.329 (b).)

(2) A bearing factor need not be employed on a part if another special factor prescribed in this section is of greater magnitude than the bearing factor.

(c) *Fitting factors.* (1) A fitting factor of at least 1.15 shall be used on all fittings the strength of which is not proven by limit and ultimate load tests in which the actual stress conditions are simulated in the fitting and the surrounding structure. This factor shall apply to all portions of the fitting, the means of attachment, and the bearing on the members joined.

(2) In the case of integral fittings the part shall be treated as a fitting up to the point where the section properties become typical of the member.

(3) The fitting factor need not be employed where a type of joint made in accordance with approved practices is based on comprehensive test data, e. g., continuous joints in metal plating, welded joints, and scarf joints in wood.

(4) A fitting factor need not be employed with respect to the bearing surface of a part if the bearing factor used (see paragraph (b) of this section) is of greater magnitude than the fitting factor.

§ 4b.308 *Flutter, deformation, and vibration.* Compliance with the following provisions shall be shown by such calculations, resonance tests, or other tests as are found necessary by the Administrator.

(a) *Flutter prevention.* The airplane shall be designed to be free from flutter of wing and tail units, including all control and trim surfaces, and from divergence (i. e. unstable structural distortion due to aerodynamic loading), at all speeds up to 1.2 V_D. A smaller margin above V_D shall be acceptable if the characteristics of the airplane (including the effects of compressibility) render a speed of 1.2 V_D unlikely to be achieved, and if it is shown that a proper margin of damping exists at speed V_D. In the absence of more accurate data, the terminal velocity in a dive of 30 degrees to the horizontal shall be acceptable as the maximum speed likely to be achieved. If concentrated balance weights are used on control surfaces, their effectiveness and strength, including supporting structure, shall be substantiated.

(b) *Loss of control due to structural deformation.* The airplane shall be designed to be free from control reversal and from undue loss of longitudinal, lateral, and directional stability and control as a result of structural deformation, including that of the control surface covering, at all speeds up to the speed prescribed in paragraph (a) of this section for flutter prevention.

(c) *Vibration and buffeting.* The airplane shall be designed to withstand all vibration and buffeting which might occur in any likely operating conditions.

CONTROL SURFACES

§ 4b.310 *General.* The requirements of §§ 4b.311 through 4b.313 shall apply to the design of fixed and movable control surfaces.

§ 4b.311 *Proof of strength.* (a) Control surface limit load tests shall be conducted to prove compliance with limit load requirements.

(b) Control surface tests shall include the horn or fitting to which the control system is attached.

(c) Analyses or individual load tests shall be conducted to demonstrate compliance with the special factor requirements for control surface hinges. (See §§ 4b.307 and 4b.313 (a).)

§ 4b.312 *Installation.* (a) Movable tail surfaces shall be so installed that there is no interference between any two surfaces when one is held in its extreme position and all the others are operated through their full angular movement.

(b) When an adjustable stabilizer is used, stops shall be provided which will limit its travel, in the event of failure of the adjusting mechanism, to a range equal to the maximum required to trim the airplane in accordance with § 4b.140.

§ 4b.313 *Hinges.* (a) Control surface hinges, except ball and roller bearings, shall incorporate a special factor of not less than 6.67 with respect to the ultimate bearing strength of the softest material used as a bearing.

(b) For hinges incorporating ball or roller bearings, the approved rating of the bearing shall not be exceeded.

(c) Hinges shall provide sufficient strength and rigidity for loads parallel to the hinge line.

CONTROL SYSTEMS

§ 4b.320 *General.* All controls and control systems shall operate with ease, smoothness, and positiveness appropriate to their function. (See also §§ 4b.350 and 4b.353.)

§ 4b.321 *Two-control airplanes.* Two-control airplanes shall be capable of continuing safely in flight and landing in the event of failure of any one connecting element in the directional-lateral flight control system.

§ 4b.322 *Trim controls and systems.* (a) Trim controls shall be designed to safeguard against inadvertent or abrupt operation.

(b) Each trim control shall operate in the plane and with the sense of motion of the airplane. (See fig. 4b–16.)

(c) Means shall be provided adjacent to the trim control to indicate the direction of the control movement relative to the airplane motion.

(d) Means shall be provided to indicate the position of the trim device with respect to the range of adjustment. The indicating means shall be clearly visible.

(e) Trim devices shall be capable of continued normal operation in the event of failure of any one connecting or transmitting element of the primary flight control system.

(f) Trim tab controls shall be irreversible, unless the tab is appropriately balanced and shown to be free from flutter.

(g) Where an irreversible tab control system is employed, the portion from the tab to the attachment of the irreversible unit to the airplane structure shall consist of a rigid connection.

§ 4b.323 *Wing flap controls.* (a) The wing flap controls shall operate in a manner to permit the flight crew to place the flaps in all of the take-off, en route, approach, and landing positions established under § 4b.111 and to maintain these positions thereafter without further attention on the part of the crew, except for flap movement produced by an automatic flap positioning or load limiting device.

(b) The wing flap control shall be located and designed to render improbable its inadvertent operation.

(c) The rate of motion of the wing flap in response to the operation of the control and the characteristics of the automatic flap positioning or load limiting device shall be such as to obtain satisfactory flight and performance characteristics under steady or changing conditions of air speed, engine power, and airplane attitude.

(d) The wing flap control shall be designed to retract the flaps from the fully extended position during steady flight at maximum continuous engine power at all speeds below V_F+10 (m. p. h.).

(e) Means shall be provided to indicate the take-off, en route, approach, and landing flap positions.

(f) If any extension of the flaps beyond the landing position is possible, the flap control shall be clearly marked to identify such range of extension.

§ 4b.324 *Wing flap interconnection.* (a) The motion of wing flaps on opposite sides of the plane of symmetry shall be synchronized by a mechanical interconnection unless the airplane is demonstrated to have safe flight characteristics while the flaps are retracted on one side and extended on the other.

(b) Where a wing flap interconnection is used, it shall be designed to account for the applicable unsymmetrical loads, including those resulting from flight with the engines on one side of the plane of symmetry inoperative and the remaining engines at take-off power. For airplanes with flaps which are not subjected to slipstream conditions, the structure shall be designed for the loads imposed when the wing flaps on one side are carrying the most severe load occurring in the prescribed symmetrical conditions and those on the other side are carrying not more than 80 percent of that load.

§ 4b.325 *Control system stops.* (a) All control systems shall be provided with stops which positively limit the range of motion of the control surfaces.

(b) Control system stops shall be so located in the system that wear, slackness, or take-up adjustments will not affect adversely the control characteristics of the airplane because of a change in the range of surface travel.

(c) Control system stops shall be capable of withstanding the loads corresponding with the design conditions for the control system.

§ 4b.326 *Control system locks.* Provision shall be made to prevent damage to the control surfaces (including tabs) and the control system which might result from gusts striking the airplane while it is on the ground or water (see also § 4b.226). If a device provided for this purpose, when engaged, prevents normal operation of the control surfaces by the pilot, it shall comply with the following provisions.

(a) The device shall either automatically disengage when the pilot operates the primary flight controls in a normal manner, or it shall limit the operation of the airplane in such a manner that the pilot receives unmistakable warning at the start of take-off.

(b) Means shall be provided to preclude the possibility of the device becoming inadvertently engaged in flight.

§ 4b.327 *Static tests.* Tests shall be conducted on control systems to show compliance with limit load requirements in accordance with the following provisions.

(a) The direction of the test loads shall be such as to produce the most severe loading in the control system.

(b) The tests shall include all fittings, pulleys, and brackets used in attaching the control system to the main structure.

(c) Analyses or individual load tests shall be conducted to demonstrate compliance with the special factor requirements for control system joints subjected to angular motion. (See §§ 4b.307 and 4b.329 (b).)

§ 4b.328 *Operation tests.* An operation test shall be conducted for each control system by operating the controls from the pilot compartment with the entire system loaded to correspond with 80 percent of the limit load specified for the control system. In this test there shall be no jamming, excessive friction, or excessive deflection.

§ 4b.329 *Control system details; general.* All details of control systems shall be designed and installed to prevent jamming, chafing, and interference from cargo, passengers, and loose objects. Precautionary means shall be provided in the cockpit to prevent the entry of foreign objects into places where they would jam the control systems. Provisions shall be made to prevent the slapping of cables or tubes against other parts of the airplane. The following detail requirements shall be applicable with respect to cable systems and joints.

(a) *Cable systems.* (1) Cables, cable fittings, turnbuckles, splices, and pulleys shall be of an approved type.

(2) Cables smaller than ⅛-inch diameter shall not be used in the aileron, elevator, or rudder systems.

(3) The design of cable systems shall be such that there will be no hazardous change in cable tension throughout the range of travel under operating conditions and temperature variations.

(4) Pulley types and sizes shall correspond with the cables used.

(5) All pulleys and sprockets shall be provided with closely fitted guards to prevent the cables and chains being displaced or fouled.

(6) Pulleys shall lie in the plane passing through the cable within such limits that the cable does not rub against the pulley flange.

(7) Fairleads shall be so installed that they do not cause a change in cable direction of more than 3°.

(8) Clevis pins (excluding those not subject to load or motion) retained only by cotter pins shall not be used in the control system.

(9) Turnbuckles attached to parts having angular motion shall be installed to prevent positively any binding throughout the range of travel.

(10) Provision for visual inspection shall be made at all fairleads, pulleys, terminals, and turnbuckles.

(b) *Joints.* (1) Control system joints subjected to angular motion in push-pull systems, excepting ball and roller bearing systems, shall incorporate a special factor of not less than 3.33 with respect to the ultimate bearing strength of the softest material used as a bearing.

(2) It shall be acceptable to reduce the factor specified in subparagraph (1) of this paragraph to a value of 2.0 for joints in cable control systems.

(3) The approved rating of ball and roller bearings shall not be exceeded.

LANDING GEAR

§ 4b.330 *General.* The requirements of §§ 4b.331 through 4b.338 shall apply to the complete landing gear.

§ 4b.331 *Shock absorbers.* (a) The shock absorbing elements for the main, nose, and tail wheel units shall be substantiated by the tests specified in § 4b.332.

(b) The shock absorbing ability of the landing gear in taxying shall be demonstrated by the tests prescribed in § 4b.172.

§ 4b.332 *Landing gear tests.* The landing gear shall withstand the following tests.

(a) *Shock absorption tests.* (1) It shall be demonstrated by energy absorption tests that the limit load factors selected for design in accordance with § 4b.230 (b) for take-off and landing weights, respectively, will not be exceeded.

(2) In addition to the provisions of subparagraph (1) of this paragraph, a reserve of energy absorption shall be demonstrated by a test simulating an airplane descent velocity of 12 f. p. s. at design landing weight, assuming wing lift not greater than the airplane weight acting during the landing impact. In this test the landing gear shall not fail. (See paragraph (c) of this section.)

(b) *Limit drop tests.* (1) If compliance with the limit landing conditions specified in paragraph (a) (1) of this section is demonstrated by free drop tests, these shall be conducted on the complete airplane, or on units consisting of wheel, tire, and shock absorber in their proper relation. The free drop heights shall not be less than the following:

(i) 18.7 inches for the design landing weight conditions,

(ii) 6.7 inches for the design take-off weight conditions,

(2) If wing lift is simulated in free drop tests the landing gear shall be dropped with an effective mass equal to:

$$W_e = W\left(\frac{h+(1-L)d}{h+d}\right);$$

where:

W_e = the effective weight to be used in the drop test (lbs.),
h = specified free drop height (inches),
d = deflection under impact of the tire (at the approved inflation pressure) plus the vertical component of the axle travel relative to the drop mass (inches),
$W = W_g$ for main gear units (lbs.), equal to the static weight on the particular unit with the airplane in the level attitude (with the nose wheel clear in the case of nose wheel type airplanes),
$W = W_t$ for tail gear units (lbs.), equal to the static weight on the tail unit with the airplane in the tail-down attitude,
$W = W_n$ for nose wheel units (lbs.), equal to the vertical component of the static reaction which would exist at the nose wheel, assuming the mass of the airplane acting at the center of gravity and exerting a force of 1.0g downward and 0.25g forward,
L = the ratio of the assumed wing lift to the airplane weight, not in excess of 0.667.

(3) The attitude in which a landing gear unit is drop tested shall simulate the airplane landing condition critical for the unit.

(4) The value of d used in the computation of W_e in subparagraph (2) of this paragraph shall not exceed the value actually obtained in the drop test.

(c) *Reserve energy absorption drop tests.* (1) If compliance with the reserve energy absorption condition specified in paragraph (a) (2) of this section is demonstrated by free drop tests, the landing gear units shall be dropped from a free drop height of not less than 27 inches.

(2) If wing lift equal to the airplane weight is simulated, the units shall be dropped with an effective mass equal to:

$$W_e = W\left(\frac{h}{h+d}\right);$$

where the symbols and other details are the same as in paragraph (b) of this section.

§ 4b.333 *Limit load factor determination.* (a) In determining the airplane inertia limit load factor n from the free drop tests specified in § 4b.332, the following formula shall be used:

$$n = n_j\frac{W_e}{W} + L;$$

where:

n_j = the load factor during impact developed on the mass used in the drop test (i. e., the acceleration dv/dt in g's recorded in the drop test plus 1.0). (See § 4b.332 (b) (2) for explanation of W_e, W, and L).

(b) The value of n determined in paragraph (a) of this section shall not be greater than the limit load factor used for the landing conditions. (See § 4b.230 (b)).

§ 4b.334 *Retracting mechanism*—(a) *General.* (1) The landing gear retracting mechanism, wheel well doors, and supporting structure shall be designed for the loads occurring in the flight conditions when the gear is in the retracted position, and for the combination of friction, inertia, brake torque, and air loads occurring during retraction and extension at any air speed up to 1.6 V_{s_1} (flaps in the approach position at design landing weight), and any load factor up to those specified in § 4b.212 for the flaps extended condition.

(2) The landing gear, the retracting mechanism, and the airplane structure including wheel well doors shall be designed to withstand the flight loads occurring with the landing gear in the extended position at any speed up to 0.67 V_G, unless other means are provided to decelerate the airplane in flight at this speed.

(3) Landing gear doors, their operating mechanism, and their supporting structure shall be designed for the conditions of air speed and load factor prescribed in subparagraphs (1) and (2) of this paragraph, and in addition they shall be designed for the yawing maneuvers prescribed for the airplane.

(b) *Landing gear lock.* A positive means shall be provided for the purpose of maintaining the landing gear in the extended position.

(c) *Emergency operation.* Emergency means of extending the landing gear shall be provided, so that the landing gear can be extended in the event of any reasonably probable failure in the normal retraction system. In any case the emergency system shall provide for the failure of any single source of hydraulic, electric, or equivalent energy supply.

(d) *Operation test.* Proper functioning of the landing gear retracting mechanism shall be demonstrated by operation tests.

(e) *Position indicator and warning device.* (1) When a retractable landing gear is used, means shall be provided for indicating to the pilot when the gear is secured in the extended and in the retracted positions.

(2) In addition to the requirement of subparagraph (1) of this paragraph, landplanes shall be provided with an aural warning device which will function continuously when all throttles are closed if the gear is not fully extended and locked.

(3) If a manual shutoff for the warning device prescribed in subparagraph (2) of this paragraph is provided, it shall be installed so that reopening the throttles will reset the warning mechanism.

(f) *Control.* The location and operation of the landing gear retraction control shall be according to the provisions of § 4b.353.

§ 4b.335 *Wheels.* Main wheels and nose wheels shall be of an approved type. The following provisions shall apply.

(a) The maximum static load rating of each main wheel and nose wheel shall not be less than the corresponding static ground reaction under the design takeoff weight of the airplane and the critical center of gravity position.

(b) The maximum limit load rating of each main wheel and nose wheel shall not be less than the maximum radial limit load determined in accordance with the applicable ground load requirements of this part (see §§ 4b.230 through 4b.236).

(c) The maximum kinetic energy capacity rating of each main wheel-brake assembly shall not be less than the kinetic energy absorption requirement determined as follows:

$$KE = \frac{0.0334WV_{s_0}^2}{N};$$

where:

KE = kinetic energy per wheel (ft. lb.);
W = design landing weight (lb.);
V_{s_0} = power-off stalling speed of the airplane (mph) at sea level at the design landing weight and in the landing configuration;
N = number of main wheels.

NOTE: The expression for kinetic energy assumes an equal distribution of braking between main wheels. In cases of unequal distribution the expression requires appropriate modification.

(d) The minimum stalling speed rating of each main wheel-brake assembly, i. e., the initial speed used in the dynamometer tests, shall not be greater than the V_{s_0} used in the determination of kinetic energy in accordance with paragraph (c) of this section.

NOTE: The provision of this paragraph is based upon the assumption that the testing procedures for wheel-brake assemblies involve a specified rate of deceleration, and, therefore, for the same amount of kinetic energy the rate of energy absorption (the power absorbing ability of the brake) varies inversely with the initial speed.

§ 4b.336 *Tires.* (a) Landing gear tires shall be of a proper fit on the rim of the wheel, and their approved rating shall be such that it is not exceeded under the following conditions:

(1) Airplane weight equal to the design take-off weight,

(2) Load on each main wheel tire equal to the corresponding static ground reaction at the critical center of gravity position.

(3) Load on nose wheel tires (to be compared with the dynamic rating established for such tires) equal to the reaction obtained at the nose wheel, assuming the mass of the airplane concentrated at the most critical center of gravity and exerting a force of 1.0g downward and 0.31g forward, the reactions being distributed to the nose and main wheels by the principles of statics with the drag reaction at the ground applied only at those wheels which have brakes.

§ 4b.337 *Brakes*—(a) *General.* (1) The airplane shall be equipped with brakes of an approved type. The brake ratings shall be in accordance with § 4b.335 (c) and (d).

(2) The brake system shall be so designed and constructed that in the event of a single failure in any connection or transmitting element in the brake system (excluding the operating pedal or handle), or the loss of any single source of hydraulic or other brake operating energy supply, it shall be possible to bring the airplane to rest under conditions specified in § 4b.122 with a mean deceleration during the landing roll of at least 50 percent of that obtained in de-

termining the landing distance as prescribed in that section.

(3) In applying the requirement of *subparagraph (2) of this paragraph to* hydraulic brakes, the brake drum, shoes, and actuators (or their equivalents) shall be considered as connecting or transmitting elements, unless it is shown that the leakage of hydraulic fluid resulting from failure of the sealing elements in these units would not reduce the braking effectiveness below that specified in subparagraph (2) of this paragraph.

(b) *Brake controls.* Brake controls shall not require excessive control forces in their operation.

(c) *Parking brake controls.* A parking brake control shall be provided and installed so that it can be set by the pilot and, without further attention, will maintain sufficient braking to prevent the airplane from rolling on a paved, level runway while take-off power on the critical engine is being applied.

§ 4b.338 *Skis.* Skis shall be of an approved type. The maximum limit load *rating of each ski shall not be less* than the maximum limit load determined in accordance with the applicable ground load requirements of this part. (See §§ 4b.230 through 4b.236.)

HULLS AND FLOATS

§ 4b.340 *General.* The requirements of §§ 4b.341 and 4b.342 shall apply to the design of hulls and floats.

§ 4b.341 *Seaplane main floats.* Seaplane main floats shall be of an approved type and shall comply with the provisions of §4b.250. In addition, the following shall apply.

(a) *Buoyancy.* Each seaplane main float shall have a buoyancy of 80 percent in excess of that required to support the maximum weight of the seaplane in fresh water.

(b) *Compartmentation.* Each seaplane main float shall contain not less than 5 watertight compartments. The compartments shall have approximately equal volumes.

§ 4b.342 *Boat hulls.* (a) The hulls of boat seaplanes and amphibians shall be divided into watertight compartments so that, with any two adjacent compartments flooded, the buoyancy of the hull and auxiliary floats (and wheel tires, if used) will provide a sufficient margin of positive stability to minimize capsizing in rough fresh water.

(b) For the purpose of communication between compartments, bulkheads with watertight doors shall be allowed.

PERSONNEL AND CARGO ACCOMMODATIONS

§ 4b.350 *Pilot compartment; general.* (a) The arrangement of the pilot compartment and its appurtenances shall provide safety and assurance that the *pilot will be able to perform all of his* duties and operate the controls in the correct manner without unreasonable concentration and fatigue.

(b) The primary flight controls listed *on figure 4b–16, excluding cables and* control rods, shall be so located with respect to the propellers that no portion of the pilot or the controls lies in the region between the plane of rotation of any inboard propeller and the surface generated by a line passing through the center of the propeller hub and making an angle of 5° forward or aft of the plane of rotation of the propeller.

(c) When provision is made for a second pilot, the airplane shall be controllable with equal safety from both seats.

(d) The pilot compartment shall be constructed to prevent leakage likely to be distracting to the crew or harmful to the structure when flying in rain or snow.

(e) A door shall be provided between the pilot compartment and the passenger compartment.

PRIMARY

Controls	Movement and actuation
Aileron	Right (clockwise) for right wing down.
Elevator	Rearward for nose up.
Rudder	Right pedal forward for nose right.

SECONDARY

Flaps (or auxiliary lift devices).	Forward for flaps up; rearward for flaps down.
Trim tabs (or equivalent).	Rotate to produce similar rotation of the airplane about an axis parallel to the axis of the control.

FIGURE 4b–16—Aerodynamic controls.

(f) The door prescribed in paragraph (e) of this section shall be equipped with a locking means to prevent passengers from opening the door without the pilot's permission.

(g) Vibration and noise characteristics of cockpit appurtenances shall not interfere with the safe operation of the airplane.

§ 4b.351 *Pilot compartment vision—* (a) *Nonprecipitation conditions.* (1) *The pilot compartment shall be arranged* to afford the pilots a sufficiently extensive, clear, and undistorted view to perform safely all maneuvers within the operating limitations of the airplane, *including taxying, take-off, approach, and* landing.

(2) It shall be demonstrated by day and night flight tests that the pilot compartment is free of glare and reflections which would tend to interfere with the pilots' vision.

(b) *Precipitation conditions.* (1) Means shall be provided for maintaining a sufficient portion of the windshield clear so that both pilots are afforded a sufficiently extensive view along the flight path in all normal flight attitudes of the airplane. Such means shall be designed to function under the following conditions without continuous attention on the part of the crew:

(i) In heavy rain at speeds up to 1.6 V_{s_1}, flaps retracted,

(ii) In the most severe icing conditions for which approval of the airplane is desired.

(2) In addition to the means prescribed in subparagraph (1) of this paragraph at least the first pilot shall be provided with a window which, when the cabin is not pressurized, is openable under the conditions prescribed in subparagraph (1) of this paragraph, and which provides the view specified in that subparagraph. The design shall be such that when the window is opened sufficient protection from the elements will be provided against the impairment of the pilot's vision.

§ 4b.352 *Windshield and windows.* (a) All internal glass panes shall be of a nonsplintering safety type.

(b) The windshield, its supporting structure, and other structure in front of the pilots shall have sufficient strength to withstand without penetration the impact of a four-pound bird when the velocity of the airplane relative to the bird along the airplane's flight path is equal to the value of V_C at sea level selected in accordance with § 4b.210 (b) (4).

(c) The design of windshields and windows in pressurized airplanes shall be based on factors peculiar to high altitude operation. (See also § 4b.373.)

NOTE: Factors peculiar to high altitude operation as they may affect the design of windshields and windows include the effects of continuous and cyclic pressurization loadings, the inherent characteristics of the material used, the effects of temperatures and temperature differentials, etc.

§ 4b.353 *Controls.* (a) All cockpit controls shall be located to provide convenience in operation and in a manner tending to prevent confusion and inadvertent operation. (See also § 4b.737.)

(b) The direction of movement of controls shall be according to figures 4b–16 and 4b–17. Wherever practicable the sense of motion involved in the operation of other controls shall correspond with the sense of the effect of the operation upon the airplane or upon the part operated. All controls of a variable nature employing a rotary motion shall move clockwise from the off position, through an increasing range, to the full on position.

(c) The controls shall be so located and arranged with respect to the pilots' seats that there exists full and unrestricted movement of each control without interference from either the cockpit structure or the pilots' clothing when seated with the seat belt fastened. This shall be demonstrated for individuals ranging from 5' 2'' to 6' 0'' in height.

(d) Identical powerplant controls for each engine shall be located to prevent any misleading impression as to the engine to which they relate.

Controls	Movement and actuation
Powerplant	
Throttles	Forward to increase forward thrust and rearward to increase rearward thrust.
Propellers	Forward to increase rpm.
Mixture	Forward or upward for rich.
Carburetor air heat	Forward or upward for cold.
Supercharger	Forward or upward for low blower. In the case of turbosuperchargers, forward, upward, or clockwise to increase pressure.
Auxiliary	
Landing gear	Down to extend.

FIGURE 4b–17—POWERPLANT AND AUXILIARY CONTROLS.

(e) The wing flap (or auxiliary lift device) and landing gear controls shall comply with the following:

(1) The wing flap control shall be located on top of the pedestal aft of the

UCT LIBRARY
FOB 19-A

throttle(s), centrally or to the right of the pedestal centerline and shall be not less than 10 inches aft of the landing gear control.

(2) The landing gear control shall be located to the left of the pedestal centerline.

(f) The control knobs shall be shaped in accordance with Figure 4b–22, and such knobs shall be of the same color, but of a color in contrast with that of not only the other control knobs but also the surrounding cockpit.

NOTE: Figure 4b–22 is not intended to indicate the exact size or proportion of the control knobs.

(g) Where the work load on the flight crew is such as to require a flight engineer (see § 4b.720), a flight engineer station shall be provided. The station shall be so located and arranged that the flight crew members can perform their functions efficiently and without interfering with each other.

§ 4b.354 *Instrument arrangement.* (See § 4b.611.)

§ 4b.355 *Instrument marking.* (The operational markings, instructions, and placards required for the instruments, controls, etc., are specified in §§ 4b.730 through 4b.738.)

§ 4b.356 *Doors.* (a) Airplane cabins shall be provided with at least one easily accessible external door.

(b) Means shall be provided for locking each external door and for safeguarding against opening in flight either inadvertently by persons or as a result of mechanical failure. It shall be possible to open external doors from either the inside or the outside even though persons may be crowding against the door from the inside. The means of opening shall be simple and obvious and shall be so arranged and marked that it can be readily located and operated even in darkness.

(c) Reasonable provisions shall be made to prevent the jamming of any external door as a result of fuselage deformation in a minor crash.

(d) External doors shall be so located that persons using them will not be endangered by the propellers when appropriate operating procedures are employed.

(e) Means shall be provided for a direct visual inspection of the locking mechanism by crew members to ascertain whether all external doors, including passenger, crew, service, and cargo doors, are fully locked (see also § 4b.362 (e) (5) for emergency exits). In addition, visual means shall be provided to signal to appropriate crew members that all normally used external doors are closed and in the fully locked position.

§ 4b.357 *Door louvres.* Where internal doors are equipped with louvres or other ventilating means, provision convenient to the crew shall be made for stopping the flow of air through the door when such action is found necessary.

§ 4b.358 *Seats, berths, and safety belts*—(a) *General.* At all stations designated as occupiable during take-off and landing, the seats, berths, belts, harnesses, and adjacent parts of the airplane shall be such that a person making proper use of these facilities will not suffer serious injury in the emergency landing conditions as a result of inertia forces specified in § 4b.260. Seats and berths shall be of an approved type (see also § 4b.643 concerning safety belts).

(b) *Arrangement.* (1) Passengers and crew shall be afforded protection from head injuries by one of the following means:

(i) Safety belt and shoulder harness which will prevent the head from contacting any injurious object,

(ii) Safety belt and the elimination of all injurious objects within striking radius of the head,

(iii) Safety belt and a cushioned rest which will support the arms, shoulders, head, and spine.

(2) For arrangements which do not provide a firm hand hold on seat backs, hand grips or rails shall be provided along aisles to enable passengers or crew members to steady themselves while using the aisles in moderately rough air.

(3) All projecting objects which would cause injury to persons seated or moving about the airplane in normal flight shall be padded.

(c) *Strength.* All seats and berths and their supporting structure shall be designed for occupant weight of 170 pounds with due account taken of the maximum load factors, inertia forces, and reactions between occupant, seat, and safety belt or harness corresponding with all relevant flight and ground load conditions, including the emergency landing conditions prescribed in § 4b.260. In addition, the following shall apply.

(1) Pilot seats shall be designed for the reactions resulting from the application of pilot forces to the flight controls as prescribed in § 4b.224.

(2) In determining the strength of the seat or berth attachments to the structure, and the safety belt or shoulder harness attachments to the seat, berth, or structure, the inertia forces specified in § 4b.260 (a) shall be multiplied by a factor of 1.33.

§ 4b.359 *Cargo and baggage compartments.* (See also §§ 4b.382 to 4b.384.)

(a) Each cargo and baggage compartment shall be designed for the placarded maximum weight of contents and the critical load distributions at the appropriate maximum load factors corresponding with all specified flight and ground load conditions, excluding the emergency landing conditions of § 4b.260.

(b) Provisions shall be made to prevent the contents in the compartments from becoming a hazard by shifting under the loads specified in paragraph (a) of this section.

(c) Provisions shall be made to protect the passengers and crew from injury by the contents of any compartment, taking into account the emergency landing conditions of § 4b.260.

EMERGENCY PROVISIONS

§ 4b.360 *General.* The requirements of §§ 4b.361 and 4b.362 shall apply to the emergency provisions.

§ 4b.361 *Ditching.* Compliance with this section is optional. The requirements of this section are intended to safeguard the occupants in the event of an emergency landing during overwater flight. When compliance is shown with the provisions of paragraphs (a) through (c) of this section and with the provisions of §§ 4b.362 (d), 4b.645, and 4b.646, the type certificate shall include certification to that effect. When an airplane is certificated to include ditching provisions, the recommended ditching procedures established on the basis of these requirements shall be set forth in the Airplane Flight Manual (see § 4b.742 (d)).

(a) All practicable design measures compatible with the general characteristics of the type airplane shall be taken to minimize the chance of any behavior of the airplane in an emergency landing on water which would be likely to cause immediate injury to the occupants or to make it impossible for them to escape from the airplane. The probable behavior of the airplane in a water landing shall be investigated by model tests or by comparison with airplanes of similar configuration for which the ditching characteristics are known. In this investigation account shall be taken of scoops, flaps, projections, and all other factors likely to affect the hydrodynamic characteristics of the actual airplane.

(b) It shall be shown that under reasonably probable water conditions the flotation time and trim of the airplane will permit all occupants to leave the airplane and to occupy the life rafts required by § 4b.645. If compliance with this provision is shown by buoyancy and trim computations, appropriate allowances shall be made for probable structural damage and leakage.

NOTE: In the case of fuel tanks which are equipped with fuel jettisoning provisions and which can be reasonably expected to withstand a ditching without leakage, the jettisonable volume of fuel may be considered as buoyancy volume.

(c) External doors and windows shall be designed to withstand the probable maximum local pressures, unless the effects of the collapse of such parts are taken into account in the investigation of the probable behavior of the airplane in a water landing as prescribed in paragraphs (a) and (b) of this section.

§ 4b.362 *Emergency evacuation.* Crew and passenger areas shall be provided with emergency evacuation means to permit rapid egress in the event of crash landings, whether with the landing gear extended or retracted, taking account of the possibility of the airplane being on fire. The provisions of this section shall apply to airplanes where the major portion of the passenger area is aft of the powerplant and the fuel tanks. In airplanes where the major portion of the passenger area is forward of the powerplant and the fuel tanks, or in airplanes of unconventional design where the emergency exit locations prescribed in paragraph (b) of this section would be inconsistent with safe and rapid egress of passengers, variations of emergency exit locations shall be allowed if found appropriate by the Administrator. Passenger entrance, crew, and service doors shall be considered as emergency

exits if they meet the applicable requirements of this section.

(a) *Flight crew emergency exits.* Flight crew emergency exits shall be located in the flight crew area on both sides of the airplane or as a top hatch to provide for rapid evacuation. Such exits shall not be required on small airplanes where the Administrator finds that the proximity of passenger emergency exits to the flight crew area renders them convenient and readily accessible to the flight crew.

(b) *Passenger emergency exits; type and location.* The types of exits and their location shall be as follows:

(1) Type I: A rectangular opening of not less than 24 inches wide by 48 inches high, with corner radii not greater than 4 inches, located as far aft in the passenger area as practicable in the side of the fuselage at floor level.

(2) Type II: Same as Type I (subparagraph (1) of this paragraph) except that the opening is not less than 20 inches wide by 44 inches high.

(3) Type III: A rectangular opening of not less than 20 inches wide by 36 inches high, with corner radii not greater than 4 inches, located as far aft in the passenger area as practicable in the side of the fuselage.

(4) Type IV: A rectangular opening of not less than 19 inches wide by 26 inches high, with corner radii not greater than 4 inches, located over the wing in the side of the fuselage with a step-up inside the airplane of not more than 29 inches and a step-down outside the airplane of not more than 36 inches.

NOTE: Larger openings than those specified in paragraph (b) of this section will be acceptable, whether or not of rectangular shape, provided the specified rectangular openings can be inscribed therein, and further provided that the base of the opening affords a flat surface not less than the width specified.

(c) *Passenger emergency exits; number required.* Emergency exits of type and location prescribed in paragraph (b) of this section shall be accessible to the passengers and shall be provided on each side of the fuselage in accordance with the following:

Passenger seating capacity	Emergency exits required on each side of fuselage			
	Type I	Type II	Type III	Type IV
1 to 19 inclusive			1	
20 to 39 inclusive		1		1
40 to 69 inclusive	1			1
70 to 99 inclusive	1			2
100 to 139 inclusive	2			2

For airplanes with a passenger capacity of over 139 there shall be, in addition to the emergency exits prescribed for a passenger seating capacity of 100 to 139, inclusive, on each side of the fuselage, one Type I emergency exit for additional passengers up to 50, these exits to be located at such strategic points as would contribute most to the safe evacuation of passengers.

NOTE: Although similar exits and their locations are prescribed for each side of the fuselage, it is not the intent of this regulation to require that the exits necessarily be at locations diametrically opposite each other.

(d) *Ditching emergency exits.* Airplanes certificated in accordance with the ditching provisions of § 4b.261 shall be shown to have, on each side of the fuselage, not less than one emergency exit located above the water line for every 35 passengers: *Provided,* That for the purposes of this paragraph an easily accessible overhead hatch of not less than the clear dimensions of Type III emergency exits (see paragraph (b) (3) of this section) shall be considered equivalent to one emergency exit on each side.

(e) *Emergency exit arrangement.* (1) Emergency exits shall consist of movable doors or hatches in the external walls of the fuselage and shall provide an unobstructed opening to the outside.

(2) All emergency exits shall be openable from the inside and from the outside.

(3) The means of opening emergency exits shall be simple and obvious and shall not require exceptional effort of a person opening them.

(4) Means shall be provided for locking each emergency exit and for safeguarding against opening in flight either inadvertently by persons or as a result of mechanical failure.

(5) Means shall be provided for a direct visual inspection of the locking mechanism by crew members to ascertain whether all emergency exits are fully locked.

(6) Provision shall be made to minimize the possibility of jamming of emergency exits as a result of fuselage deformation in a minor crash landing.

(7) For all landplane emergency exits other than Type IV (see paragraph (b) of this section) which are more than 6 feet from the ground with the airplane on the ground and the landing gear extended, means shall be provided to assist the occupants in descending to the ground.

(8) The proper functioning of emergency exit installations shall be demonstrated by test.

(f) *Emergency exit marking.* (1) All emergency exits, their means of access, and their means of opening shall be marked conspicuously. The identity and location of emergency exits shall be recognizable from a distance equal to the width of the cabin. The location of the emergency exit operating handle and the instructions for opening shall be marked on or adjacent to the emergency exit and shall be readable from a distance of 30 inches.

(2) A source or sources of light, with an energy supply independent of the main lighting system, shall be installed to illuminate all emergency exit markings. Such lights shall be designed to function automatically in a crash landing and shall also be operable manually.

(3) All emergency exits and their means of opening shall be marked on the outside of the airplane for guidance of rescue personnel.

(g) *Emergency exit access.* Passageways between individual compartments of the passenger area and passageways leading to Type I and Type II emergency exits (see paragraph (b) of this section) shall be unobstructed and shall be not less than 20 inches wide. Adjacent to emergency exits where assisting means are required by paragraph (e) (7) of this section, there shall be sufficient additional space to allow a crew member to assist in the evacuation of passengers without reduction in the unobstructed width of the passageway to such exit.

(h) *Width of main aisle.* The main passenger aisle at any point between seats shall not be less than 15 inches wide up to a height above the floor of 25 inches and not less than 20 inches wide above that height.

VENTILATION, HEATING, AND PRESSURIZATION

§ 4b.370 *General.* The requirements of §§ 4b.371 through 4b.376 shall apply to the ventilation, heating, and pressurization of the aircraft.

§ 4b.371 *Ventilation.* (a) All crew compartments shall be ventilated by providing a sufficient amount of fresh air to enable the crew members to perform their duties without undue discomfort or fatigue.

NOTE: An outside air supply of approximately 10 cubic feet per minute is considered a minimum for each crew member.

(b) Ventilating air in crew and passenger compartments shall be free of harmful or hazardous concentrations of gases or vapors.

NOTE: Carbon monoxide concentrations in excess of one part in 20,000 parts of air are considered hazardous. Carbon dioxide in excess of 3 percent by volume (sea level equivalent) is considered hazardous in the case of crew members. Higher concentrations of carbon dioxide may not necessarily be hazardous in crew compartments if appropriate protective breathing equipment is available.

(c) Provision shall be made to insure the conditions prescribed in paragraph (b) of this section in the event of reasonably probable failures or malfunctioning of the ventilating, heating, pressurization, or other systems and equipment.

NOTE: Examples of acceptable provisions include secondary isolation, integral protective devices, and crew warning and shutoff for equipment the malfunctioning of which could introduce harmful or hazardous quantities of smoke or gases.

(d) Where partitions between compartments are equipped with louvres or other means allowing air to flow between such compartments, provision convenient to the crew shall be made for stopping the flow of air through the louvres or other means when such action is found necessary. (See also § 4b.357.)

(e) Means shall be provided to enable the crew to control the temperature and quantity of ventilating air supplied to the crew compartment independently of the temperature and quantity of ventilating air supplied to other compartments.

§ 4b.372 *Heating systems.* Combustion heaters shall be of an approved type and shall comply with the fire protection requirements of § 4b.386. Engine exhaust heaters shall comply with the provisions of § 4b.467 (c) and (d).

§ 4b.373 *Pressurized cabins; general.* The design of pressurized cabins shall comply with the requirements of §§ 4b.374 through 4b.376. (See also §§ 4b.216 (c) and 4b.352.)

§ 4b.374 *Pressure supply.* (See § 4b.477 (c).)

§ 4b.375 *Pressure control.* Pressurized cabins shall be provided with at least the following valves, controls, and indicators for controlling cabin pressure.

(a) Two pressure relief valves, at least one of which is the normal regulating valve, shall be installed to limit automatically the positive pressure differential to a predetermined value at the maximum rate of flow delivered by the pressure source. The combined capacity of the relief valves shall be such that the failure of any one valve would not cause an appreciable rise in the pressure differential. The pressure differential shall be considered positive when the internal pressure is greater than the external.

(b) Two reverse pressure differential relief valves (or equivalent) shall be installed to prevent automatically a negative pressure differential which would damage the structure, except that one such valve shall be considered sufficient if it is of a design which reasonably precludes its malfunctioning.

(c) Means shall be provided by which the pressure differential can be rapidly equalized.

(d) An automatic or manual regulator for controlling the intake and/or exhaust air flow shall be installed so that the required internal pressures and air flow rates can be maintained.

(e) Instruments shall be provided at the pilot or flight engineer station showing the pressure differential, the absolute pressure in the cabin, and the rate of change of the absolute pressure.

(f) Warning indication shall be provided at the pilot or flight engineer station to indicate when the safe or preset limits on pressure differential and on absolute cabin pressure are exceeded.

(g) If the structure is not designed for pressure differentials up to the maximum relief valve setting in combination with landing loads (see § 4b.216 (c)), a warning placard shall be placed at the pilot or flight engineer station.

§ 4b.376 *Tests*—(a) *Strength test.* The complete pressurized cabin, including doors, windows, and all valves, shall be tested as a pressure vessel for the pressure differential specified in § 4b.216 (c) (3).

(b) *Functional tests.* The following functional tests shall be performed.

(1) To simulate the condition of regulator valves closed, the functioning and the capacity shall be tested of the positive and negative pressure differential valves and of the emergency release valve.

(2) All parts of the pressurization system shall be tested to show proper functioning under all possible conditions of pressure, temperature, and moisture up to the maximum altitude selected for certification.

(3) Flight tests shall be conducted to demonstrate the performance of the pressure supply, pressure and flow regulators, indicators, and warning signals in steady and stepped climbs and descents at rates corresponding with the maximum attainable without exceeding the operating limitations of the airplane up to the maximum altitude selected for certification.

(4) All doors and emergency exits shall be tested to ascertain that they operate properly after being subjected to the flight tests prescribed in subparagraph (3) of this paragraph.

FIRE PROTECTION

§ 4b.380 *General.* Compliance shall be shown with the fire protection requirements of §§ 4b.381 through 4b.386. (See also §§ 4b.480 through 4b.490.) In addition, the following shall apply.

(a) *Hand fire extinguishers.* Hand fire extinguishers shall be of an approved type. The types and quantities of extinguishing agents shall be appropriate for the types of fires likely to occur in the compartments where the extinguishers are intended for use. Extinguishers intended for use in personnel compartments shall be such as to minimize the hazard of toxic gas concentrations.

(b) *Built-in fire extinguishers.* Where a built-in fire extinguishing system is required, its capacity in relation to the compartment volume and ventilation rate shall be sufficient to combat any fire likely to occur in the compartment. All built-in fire extinguishing systems shall be so installed that any extinguisher agent likely to enter personnel compartments will not be hazardous to the occupants and that discharge of the extinguisher cannot result in structural damage. (See also § 4b.371.)

(c) *Protective breathing equipment.* If the airplane contains Class A or B cargo compartments (see § 4b.383), protective breathing equipment shall be installed for the use of appropriate crew members. (See § 4b.651 (h).)

§ 4b.381 *Cabin interiors.* All compartments occupied or used by the crew or passengers shall comply with the following provisions.

(a) The materials in no case shall be less than flash-resistant.

(b) The wall and ceiling linings, the covering of all upholstering, floors, and furnishings shall be flame-resistant.

(c) Compartments where smoking is to be permitted shall be equipped with ash trays of the self-contained type which are completely removable. All other compartments shall be placarded against smoking.

(d) All receptacles for used towels, papers, and waste shall be of fire-resistant material, and shall incorporate covers or other provisions for containing possible fires.

(e) At least one hand fire extinguisher shall be provided for use by the flight crew.

(f) In addition to the requirements of paragraph (e) of this section at least the following number of hand fire extinguishers conveniently located for use in passenger compartments shall be provided according to the passenger capacity of the airplane:

Passenger capacity:	*Minimum number of fire extinguishers*
6 or less	0
7 through 30	1
31 through 60	2
61 or more	3

§ 4b.382 *Cargo and baggage compartments.* (a) Cargo and baggage compartments shall include no controls, wiring, lines, equipment, or accessories the damage or failure of which would affect the safe operation of the airplane, unless such items are shielded, isolated, or otherwise protected so that they cannot be damaged by movement of cargo in the compartment, and so that any breakage or failure of such item will not create a fire hazard.

(b) Provision shall be made to prevent cargo or baggage from interfering with the functioning of the fire-protective features of the compartment.

(c) All materials used in the construction of cargo or baggage compartments, including tie-down equipment, shall be flame-resistant.

§ 4b.383 *Cargo compartment classification.* All cargo and baggage compartments shall include provisions for safeguarding against fires according to the following classification.

(a) *Class A.* Cargo and baggage compartments shall be classified as "A" if the presence of a possible fire therein would be easily discernible to a member of the crew while at his station, and if all parts of the compartment are easily accessible in flight. A hand fire extingusher shall be available for each compartment. (See § 4b.380 (c) for protective breathing requirements.)

(b) *Class B.* Cargo and baggage compartments shall be classified as "B" if sufficient access is provided while in flight to enable a member of the crew to move by hand all contents and to reach effectively all parts of the compartment with a hand fire extinguisher. Compliance shall be shown with the following:

(1) The design of the compartment shall be such that, when the access provisions are being used, no hazardous quantity of smoke, flames, or extinguishing agent will enter any compartment occupied by the crew or passengers. (See § 4b.380 (c) for protective breathing requirements.)

(2) Each compartment shall be equipped with a separate system of an approved type smoke detector or fire detector other than a heat detector to give warning at the pilot or flight engineer station.

(3) Hand fire extinguishers shall be readily available for use in each compartment.

(4) The compartment shall be completely lined with fire-resistant material.

(c) *Class C.* Cargo and baggage compartments shall be classified as "C" if they do not conform to the prerequisites for the "A" or "B" classifications. Compliance shall be shown with the following.

(1) Each compartment shall be equipped with:

(i) A separate system of an approved type smoke detector or fire detector other than heat detector to give warning at the pilot or flight engineer station, and

(ii) An approved built-in fire-extinguishing system controlled from the pilot or flight engineer station.

(2) Means shall be provided to exclude hazardous quantities of smoke, flames, or extinguishing agent from en-

tering into any compartment occupied by the crew or passengers.

(3) Ventilation and drafts shall be controlled within each compartment so that the extinguishing agent provided can control any fire which may start within the compartment.

(4) The compartment shall be completely lined with fire-resistant material.

(d) *Class D.* Cargo and baggage compartments shall be classified as "D" if they are so designed and constructed that a fire occurring therein will be completely confined without endangering the safety of the airplane or the occupants. Compliance shall be shown with the following.

(1) Each compartment shall be equipped with an approved type smoke detector or fire detector other than heat detector to give warning at the pilot or flight engineer station.

(2) Means shall be provided to exclude hazardous quantities of smoke, flames, or other noxious gases from entering into any compartment occupied by the crew or passengers.

(3) Ventilation and drafts shall be controlled within each compartment so that any fire likely to occur in the compartment will not progress beyond safe limits.

NOTE: For compartments having a volume not in excess of 500 cu. ft. an airflow of not more than 1,500 cu. ft. per hour is considered acceptable. For larger compartments lesser airflow may be applicable.

(4) The compartment shall be completely lined with fire-resistant material.

(5) Consideration shall be given to the effect of heat within the compartment on adjacent critical parts of the airplane.

§ 4b.384 *Proof of compliance.* (a) Compliance with those provisions of § 4b.383 which refer to compartment accessibility, to the entry of hazardous quantities of smoke or extinguishing agent into compartments occupied by the crew or passengers, and to the dissipation of the extinguishing agent in class C compartments shall be demonstrated by tests in flight.

(b) It shall also be demonstrated during the tests prescribed in paragraph (a) of this section that no inadvertent operation of smoke or fire detectors in adjacent or other compartments within the airplane would occur as a result of fire contained in any one compartment, either during or after extinguishment, unless the extinguishing system floods such compartments simultaneously.

§ 4b.385 *Flammable fluid fire protection.* In areas of the airplane where flammable fluids or vapors might be liberated by leakage or failure in fluid systems, design precautions shall be made to safeguard against the ignition of such fluids or vapors due to the operation of other equipment, or to control any fire resulting from such ignition.

§ 4b.386 *Combustion heater fire protection*—(a) *Combustion heater fire zones.* The following shall be considered as combustion heater fire zones and shall be protected against fire in accordance with applicable provisions of §§ 4b.480 through 4b.486 and § 4b.489.

(1) Region surrounding the heater, if such region contains any flammable fluid system components other than the heater fuel system which might be damaged by heater malfunctioning or which, in case of leakage or failure, might permit flammable fluids or vapors to reach the heaters.

(2) Region surrounding the heater, if the heater fuel system incorporates fittings the leakage of which would permit fuel or vapors to enter this region.

(3) That portion of the ventilating air passage which surrounds the combustion chamber.

(b) *Ventilating air ducts.* (1) Ventilating air ducts which pass through fire zones shall be of fireproof construction.

(2) Unless isolation is provided by the use of fireproof valves or other equivalently effective means, the ventilating air duct downstream of the heater shall be of fireproof construction for a sufficient distance to assure that any fire originating from within the heater can be contained within the duct.

(3) Portions of ventilating ducts passing through regions in the airplane where flammable fluid systems are located shall be so constructed or isolated from such systems that failure or malfunctioning of the flammable fluid system components cannot introduce flammable fluids or vapors into the ventilating airstream.

(c) *Combustion air ducts.* (1) Combustion air ducts shall be of fireproof construction for a distance sufficient to prevent damage from backfiring or reverse flame propagation.

(2) Combustion air ducts shall not communicate with the ventilating airstream unless it is demonstrated that flames from backfires or reverse burning cannot enter the ventilating airstream under any conditions of ground or flight operation including conditions of reverse flow or malfunctioning of the heater or its associated components.

(3) Combustion air ducts shall not restrict prompt relief of backfires which can cause heater failure due to pressures generated within the heater.

(d) *Heater controls; general.* Provision shall be made to prevent hazardous accumulations of water or ice on or within any heater control components, control system tubing, or safety controls.

(e) *Heater safety controls.* (1) In addition to the components provided for normal continuous control of air temperature, air flow, and fuel flow, means independent of such components shall be provided with respect to each heater to shut off automatically that heater's ignition and fuel supply at a point remote from the heater when the heat exchanger temperature or ventilating air temperature exceed safe limits or when either the combustion air flow or the ventilating air flow becomes inadequate for safe operation. The means provided for this purpose for any individual heater shall be independent of all components serving other heaters the heat output of which is essential to the safe operation of the airplane.

(2) Warning means shall be provided to indicate to the crew when a heater, the heat output of which is essential to the safe operation of the airplane, has been shut off by the operation of the automatic means prescribed in subparagraph (1) of this paragraph.

(f) *Air intakes.* Combustion and ventilating air intakes shall be so located that no flammable fluids or vapors can enter the heater system under any conditions of ground or flight operation either during normal operation or as a result of malfunctioning, failure, or improper operation of other airplane components.

(g) *Heater exhaust.* Heater exhaust systems shall comply with the provisions of § 4b.467 (a) and (b). In addition, the following shall apply:

(1) Exhaust shrouds shall be sealed so that flammable fluids and hazardous quantities of vapors cannot reach the exhaust systems through joints.

(2) Exhaust systems shall not restrict the prompt relief of backfires which can cause heater failure due to pressures generated within the heater.

(h) *Heater fuel systems.* Heater fuel systems shall comply with all portions of the powerplant fuel system requirements which affect safe heater operations. In addition, heater fuel system components within the ventilating airstream shall be protected by shrouds so that leakage from such components cannot enter the ventilating airstream.

(i) *Drains.* Means shall be provided for safe drainage of fuel accumulations which might occur within the combustion chamber or the heat exchanger. Portions of such drains which operate at high temperatures shall be protected in the same manner as heater exhausts (see paragraph (g) of this section). Drains shall be protected against hazardous ice accumulations in flight and during ground operation.

MISCELLANEOUS

§ 4b.390 *Reinforcement near propellers.* Portions of the airplane near propeller tips shall have sufficient strength and stiffness to withstand the effects of the induced vibration and of ice thrown from the propeller. Windows shall not be located in such regions unless shown capable of withstanding the most severe ice impact likely to occur.

§ 4b.391 *Leveling marks.* Reference marks shall be provided for use in leveling the airplane to facilitate weight and balance determinations on the ground.

SUBPART E—POWERPLANT INSTALLATION

INSTALLATION

§ 4b.400 *General.* The powerplant installation shall be considered to include all components of the airplane which are necessary for its propulsion. It shall also be considered to include all components which affect the control of the major propulsive units or which affect their safety of operation between normal inspections or overhaul periods. (See §§ 4b.604 and 4b.613 for instrument installation and marking.)

(a) *Scope.* Reciprocating engine installations shall comply with the provisions of this subpart. Turbine engine installations shall comply with such of the provisions of this subpart as are found applicable to the specific type of installation.

DOT LIBRARY
FOR 19-A

(b) *Functioning.* All components of the powerplant installation shall be constructed, arranged, and installed in a manner which will assure their continued safe operation between normal inspections or overhaul periods.

(c) *Accessibility.* Accessibility shall be provided to permit such inspection and maintenance as is necessary to assure continued airworthiness.

(d) *Electrical bonding.* Electrical interconnections shall be provided to prevent the existence of differences of potential between major components of the powerplant installation and other portions of the airplane.

§ 4b.401 *Engines*—(a) *Type certification.* All engines shall be type certificated in accordance with the provisions of Part 13 of this subchapter.

(b) *Engine isolation.* The powerplants shall be arranged and isolated each from the other to permit operation in at least one configuration in a manner such that the failure or malfunctioning of any engine, or of any system of the airplane the failure of which can affect an engine, will not prevent the continued safe operation of the remaining engine(s) or require immediate action by a crew member for continued safe operation.

(c) *Control of engine rotation.* Means shall be provided for stopping and restarting the rotation of any engine individually in flight. All components provided for this purpose which are located on the engine side of the fire wall and which might be exposed to fire shall be of fire-resistant construction. If hydraulic propeller feathering systems are used for this purpose, the feathering lines on all airplanes manufactured after June 30, 1954, shall be fire-resistant under the operating conditions which may be expected to exist when feathering is being accomplished. (See also § 4b.449.)

§ 4b.402 *Propellers.* Propellers shall be type certificated in accordance with the provisions of Part 14 of this subchapter. The maximum propeller shaft rotational speed and the engine power permissible for use in the airplane shall not exceed the corresponding limits for which the propeller has been certificated.

§ 4b.403 *Propeller vibration.* The magnitude of the propeller blade vibration stresses under all normal conditions of operation shall be determined by actual measurement or by comparison with similar installations for which such measurements have been made. The vibration stresses thus determined shall not exceed values which have been demonstrated to be safe for continuous operation.

§ 4b.404 *Propeller pitch and speed limitations.* (a) The propeller pitch and speed shall be limited to values which will assure safe operation under all normal conditions and which will assure compliance with the performance requirements specified in §§ 4b.110 through 4b.125.

(b) A propeller speed limiting means shall be provided at the governor. Such means shall be set to limit the maximum possible governed engine speed to a value not exceeding the maximum permissible r. p. m.

(c) The low pitch blade stop in the propeller, or other means used to limit the low pitch position, shall be set so that the propeller speed does not exceed 103 percent of the maximum permissible engine r. p. m. under the following conditions:

(1) Propeller blades at the low pitch limit and governor inoperative, and

(2) Engine operating at take-off manifold pressure with the airplane stationary under standard atmospheric conditions.

§ 4b.405 *Propeller clearance.* With the airplane loaded to the maximum weight and at the most adverse center of gravity position and the propellers in the most adverse pitch position, the propeller clearances shall not be less than the following, unless smaller clearances are substantiated for the particular design involved.

(a) *Ground.* Seven inches of ground clearance for airplanes equipped with nose-wheel type landing gears, or nine inches of ground clearance for airplanes equipped with tail-wheel type landing gears shall be provided with the landing gear statically deflected and the airplane in the level take-off or in the taxying attitude, whichever is most critical. In addition, there shall be positive clearance between the propeller and the ground when, with the airplane in the level take-off attitude, the critical tire is completely deflated and the corresponding landing gear strut is completely bottomed.

(b) *Water.* A water clearance of 18 inches shall be provided unless compliance with § 4b.182 (a) is demonstrated with less clearance.

(c) *Structure.* (1) One inch radial clearance shall be provided between the blade tips and the airplane structure, or whatever additional radial clearance is necessary to preclude harmful vibration of the propeller or airplane.

(2) One-half inch longitudinal clearance shall be provided between the propeller blades or cuffs and all stationary portions of the airplane.

(3) Positive clearance shall be provided between other rotating portions of the propeller or spinner and all stationary portions of the airplane.

[CAR, 15 F. R. 3543, June 8, 1950, as amended by Amdt. 4b-7, 17 F. R. 11631, Dec. 20, 1952]

§ 4b.406 *Propeller de-icing provisions.* (a) Airplanes intended for operation under atmospheric conditions conducive to the formation of ice on propellers or on accessories where ice accumulation would jeopardize engine performance shall be provided with means for the prevention or removal of hazardous ice accumulations.

(b) If combustible fluid is used for propeller de-icing, the provisions of §§ 4b.480 through 4b.483, inclusive, shall be complied with.

FUEL SYSTEM OPERATION AND ARRANGEMENT

§ 4b.410 *General.* (a) The fuel system shall be constructed and arranged in such a manner as to assure a flow of fuel to each engine at a rate and pressure which have been established for proper engine functioning under all normal conditions, including all maneuvers for which the airplane is intended. (For fuel system instruments see § 4b.604.)

(b) The fuel system shall be so arranged that no one fuel pump can draw fuel from more than one tank at a time unless means are provided to prevent introducing air into the system.

§ 4b.411 *Fuel system independence.* The design of the fuel system shall comply with the requirements of § 4b.401 (b). Unless other provisions are made in compliance with this requirement, the fuel system shall be arranged to permit the supply of fuel to each engine through a system independent of any portion of a system supplying fuel to any other engine.

§ 4b.412 *Pressure cross-feed arrangements.* (a) Pressure cross-feed lines shall not pass through portions of the airplane intended to carry personnel or cargo, unless means are provided to permit the flight personnel to shut off the supply of fuel to these lines, or unless the lines are enclosed in a fuelproof and fumeproof shroud which is ventilated and drained to the exterior of the airplane.

(b) The shrouds specified in paragraph (a) of this section need not be used if the lines are routed or protected to safeguard against accidental damage and if they do not incorporate any fittings within the personnel or cargo areas.

(c) Lines which can be isolated from the remainder of the fuel system by means of valves at each end shall incorporate provisions for the relief of excessive pressures which might result from exposure of the isolated line to high ambient temperatures.

§ 4b.413 *Fuel flow rate.* (a) The ability of the fuel system to provide the required fuel flow rate shall be demonstrated when the airplane is in the attitude which represents the most adverse condition from the standpoint of fuel feed which the airplane is designed to attain. The following shall be considered in this respect:

(1) Normal ground attitude,

(2) Climb with take-off flaps, landing gear up, using take-off power, at speed V_2 as determined in § 4b.114 (b), at landing weight,

(3) Level flight at maximum continuous power or at the power required for level flight at V_0, whichever is the lesser,

(4) Glide at a speed of 1.3 V_{s_0} at landing weight.

(b) During the demonstration prescribed in paragraph (a) of this section, fuel shall be delivered to the engine at a pressure not less than the minimum pressure established for proper engine operation. In addition the following shall be met.

(1) The quantity of fuel in the tank being considered shall not exceed the amount established as the unusable fuel supply for that tank, as determined by demonstrating compliance with the provisions of § 4b.416 (see also §§ 4b.420 and 4b.613 (b)), together with whatever minimum quantity of fuel it may be necessary to add for the purpose of conducting the flow test.

(2) If a fuel flowmeter is provided, the meter shall be blocked during the flow test and the fuel shall flow through the meter by-pass.

(3) It shall be acceptable to conduct the demonstration prescribed in paragraph (a) of this section by a ground test on the airplane or on a representative mock-up of the fuel system.

§ 4b.414 *Pump systems.* (a) The fuel flow rate for pump systems (main and reserve supply) shall be 0.9 pounds per hour for each take-off horsepower or 125 percent of the actual take-off fuel consumption of the engine, whichever is the greater.

(b) The fuel flow rate specified in paragraph (a) of this section shall be applicable to both the primary engine-driven pump and to emergency pumps. The fuel flow rate shall be available when the pump is running at the speed at which it would normally be operating during take-off. In the case of hand-operated pumps, the speed required shall not be more than 60 complete cycles (120 single strokes) per minute.

§ 4b.415 *Transfer systems.* The provisions of § 4b.414 shall apply to transfer systems, except that the required fuel flow rate for the engine or engines involved shall be established upon the basis of maximum continuous power and its corresponding speed instead of take-off power and its corresponding speed.

§ 4b.416 *Determination of unusable fuel supply and fuel system operation on low fuel.* (a) The quantity of fuel with which compliance with the provision of this paragraph is demonstrated shall be selected by the applicant who, in addition, shall indicate which of the conditions specified in paragraph (b) of this section are most likely to be critical from the standpoint of establishing the unusable fuel supply, and also indicate the order in which the other conditions may be critical.

(b) The unusable fuel supply for each tank used for take-off and landing shall be established as not less than the quantity at which the first evidence of malfunctioning occurs under the following conditions: (See § 4b.420.)

(1) Level flight at maximum continuous power or at the power required for level flight at V_Q, whichever is the lesser,

(2) Climb with take-off flaps and landing gear up, at take-off power, at landing weight, and at speed V_2 determined in accordance with § 4b.114 (b),

(3) Rapid application of maximum continuous power and subsequent transition to a climb at speed V_2 determined in accordance with § 4b.114 (b), with retraction of flaps and landing gear, from a power-off glide at 1.3 V_{s_0}, with flaps and landing gear down, at landing weight.

(c) If an engine can be supplied with fuel from more than one tank, it shall be possible to regain the full fuel pressure of that engine in not more than 20 seconds after switching to any fuel tank after engine malfunctioning becomes apparent due to the depletion of the fuel supply in any tank from which the engine can be fed. Compliance with this provision shall be demonstrated in level flight.

(d) The unusable fuel supply for all tanks other than those used for take-off and landing shall be established as not less than the quantity at which the first evidence of malfunctioning occurs under the conditions specified in paragraph (b) (1) of this section. It shall be acceptable to demonstrate compliance with this requirement by a ground test.

§ 4b.417 *Fuel system hot weather operation.* (a) To prove satisfactory hot weather operation the airplane shall be climbed from the altitude of the airport chosen by the applicant to the altitude corresponding with that at which the one-engine-inoperative best rate of climb is not greater than the en route climb with the configuration and at the weight specified in § 4b.120 (c). There shall be no evidence of vapor lock or other malfunctioning. The climb test shall be conducted under the following conditions.

(1) All engines shall operate at maximum continuous power, except that take-off power shall be used for the altitude range extending from 1,000 feet below the critical altitude through the critical altitude. The time interval during which take-off power is used shall not exceed the take-off time limitation.

(2) The weight shall be with full fuel tanks, minimum crew, and such ballast as is required to maintain the center of gravity within allowable limits.

(3) The speed of climb shall not exceed that which will permit compliance with the minimum climb requirement specified in § 4b.119 (a).

(4) The fuel temperature shall be not less than 110° F.

(b) The test prescribed in paragraph (a) of this section shall be performed either in flight or on the ground closely simulating flight conditions. If a flight test is performed in weather sufficiently cold to interfere with the proper conduct of the test, the fuel tank surfaces, fuel lines, and other fuel system parts subjected to cooling action from cold air shall be insulated to simulate, in so far as practicable, flight in hot weather.

§ 4b.418 *Flow between interconnected tanks.* (a) In fuel systems where the tank outlets are interconnected, it shall not be possible for fuel to flow between tanks in quantities sufficient to cause an overflow of fuel from the tank vent when the airplane is operated as specified in § 4b.416 (b) and the tanks are full.

(b) If it is possible to pump fuel from one tank to another in flight, the design of the fuel tank vents and the fuel transfer system shall be such that structural damage to tanks will not occur in the event of overfilling.

FUEL SYSTEM CONSTRUCTION AND INSTALLATION

§ 4b.420 *General.* (a) Fuel tanks shall be capable of withstanding without failure all vibration, inertia, fluid, and structural loads to which they may be subjected in operation.

(b) Flexible fuel tank liners shall be of an approved type or shall be shown to be suitable for the particular application.

(c) The fuel tanks, as installed, shall be designed to withstand a minimum internal pressure of 3.5 p. s. i.

(d) Integral type fuel tanks shall be provided with facilities for inspection and repair of the tank interior.

(e) The total usable capacity of the fuel tanks shall not be less than 0.15 gallons for each maximum continuous horsepower for which the airplane is certificated.

(f) The unusable fuel capacity shall be the minimum quantity of fuel which will permit compliance with the provisions of § 4b.416.

§ 4b.421 *Fuel tank tests.* (a) Fuel tanks shall be capable of withstanding the following pressure tests without failure or leakage. It shall be acceptable to apply the pressures in a manner simulating the actual pressure distribution in service.

(1) Conventional metal tanks and nonmetallic tanks the walls of which are not supported by the airplane structure shall be submitted to a pressure of 3.5 p. s. i., or the pressure developed during the maximum ultimate acceleration of the airplane with a full tank, whichever is the greater.

(2) Integral tanks shall be submitted to a pressure of 3.5 p. s. i. unless the pressure developed during the maximum limit acceleration of the airplane with a full tank exceeds this value, in which case a hydrostatic head, or equivalent test, shall be applied to duplicate the acceleration loads in so far as possible, except that the pressure need not exceed 3.5 p. s. i. on surfaces not exposed to the acceleration loading.

(3) Nonmetallic tanks the walls of which are supported by the airplane structure shall be submitted to a pressure of 3.5 p. s. i. when mounted in the airplane structure.

(b) Tanks with large unsupported or unstiffened flat areas shall be capable of withstanding the following test, or other equivalent test, without leakage or failure.

(1) The complete tank assembly together with its supports shall be subjected to a vibration test when mounted in a manner simulating the actual installation.

(2) The tank assembly shall be vibrated for 25 hours at an amplitude of not less than one thirty-second of an inch while filled two-thirds full of water.

(3) The frequency of vibration shall be 90 percent of the maximum continuous rated speed of the engine unless some other frequency within the normal operating range of speeds of the engine is more critical, in which case the latter speed shall be employed and the time of test shall be adjusted to accomplish the same number of vibration cycles.

(4) In conjunction with the vibration test the tank assembly shall be rocked through an angle of 15° on either side of the horizontal (30° total) about an axis parallel to the axis of the fuselage.

(5) The assembly shall be rocked at the rate of 16 to 20 complete cycles per minute.

(c) In the case of nonmetallic tanks a specimen tank of the same basic construction as that to be used in the airplane, when installed in a representative

test tank, shall withstand the test as specified in paragraph (b) of this section with fuel at a temperature of 110° F.

§ 4b.422 *Fuel tank installation.* (a) The method of support for fuel tanks shall not permit concentration of loads, resulting from the weight of the fuel in the tank, on unsupported tank surfaces. The following shall be applicable.

(1) Pads shall be provided to prevent chafing between the tank and its supports.

(2) Materials employed for padding shall be nonabsorbent or shall be treated to prevent the absorption of fluids.

(3) If flexible tank liners are employed they shall be so supported that the liner is not required to withstand fluid loads.

(4) Interior surfaces of tank compartments shall be smooth and free of projections which could cause wear of the liner, unless provisions are made for protection of the liner at such points or unless the construction of the liner itself provides such protection.

(b) Spaces adjacent to the surfaces of the tank shall be ventilated consistent with the size of the compartment to avoid fume accumulation in the case of minor leakage. If the tank is in a sealed compartment it shall be acceptable to limit the ventilation to that provided by drain holes of sufficient size to prevent excessive pressure resulting from altitude changes.

(c) Location of fuel tanks shall comply with the provisions of § 4b.481 (a).

(d) No portion of engine nacelle skin which lies immediately behind a major air egress opening from the engine compartment shall act as the wall of an integral tank.

(e) Fuel tanks shall be isolated from personnel compartments by means of fumeproof and fuelproof enclosures.

§ 4b.423 *Fuel tank expansion space.* (a) Fuel tanks shall be provided with an expansion space of not less than 2 percent of the tank capacity.

(b) It shall not be possible to fill the fuel tank expansion space inadvertently when the airplane is in the normal ground attitude.

§ 4b.424 *Fuel tank sump.* (a) Each fuel tank shall be provided with a sump having a capacity of not less than either 0.25 percent of the tank capacity or one-sixteenth of a gallon, whichever is the greater.

(b) The fuel tank sump capacity specified in paragraph (a) of this section shall be effective with the airplane in the normal ground attitude. The fuel tank shall be constructed to permit drainage of any hazardous quantity of water from all portions of the tank to the sump when the airplane is in the ground attitude.

(c) Fuel tank sumps shall be provided with an accessible drain to permit complete drainage of the sump on the ground. The drain shall discharge clear of all portions of the airplane and shall be provided with means for positive locking of the drain in the closed position, either manually or automatically.

§ 4b.425 *Fuel tank filler connection.* (a) The design of fuel tank filler connections shall be such as to prevent the entrance of fuel into the fuel tank compartment or any other portion of the airplane other than the tank itself.

(b) Recessed fuel tank filler connections which retain any appreciable quantity of fuel shall incorporate a drain, and the drain shall discharge clear of all portions of the airplane.

(c) The fuel tank filler cap shall provide a fuel-tight seal.

(d) The fuel tank filler connections shall be marked as prescribed in § 4b.738 (b).

§ 4b.426 *Fuel tank vents and carburetor vapor vents.* (a) Fuel tanks shall be vented from the top portion of the expansion space in such a manner that venting of the tank is effective under all normal flight conditions. The following shall be applicable.

(1) Vent outlets shall be located and constructed to prevent the possibility of being obstructed by ice or other foreign matter.

(2) The vent shall be constructed to preclude the possibility of siphoning fuel during normal operation.

(3) The vent shall be of sufficient size to prevent the existence of excessive differences of pressure between the interior and exterior of the tank during normal flight operation, during maximum rate of descent, and, if applicable, during refueling and defueling.

(4) Air spaces of tanks with interconnected outlets shall also be interconnected.

(5) There shall be no points in the vent line where moisture could accumulate with the airplane in either the ground or the level flight attitude unless drainage is provided.

(6) Vents and drainage shall not terminate at points where the discharge of fuel from the vent outlet would constitute a fire hazard or from which fumes could enter personnel compartments.

(b) Carburetors which are provided with vapor elimination connections shall be provided with a vent line to lead vapors back to one of the fuel tanks. The vents shall comply with the following.

(1) Provisions shall be incorporated in the vent system to avoid stoppage by ice.

(2) If more than one fuel tank is provided and it is necessary to use the tanks in a definite sequence, the vapor vent return line shall lead back to the fuel tank used for take-off and landing.

§ 4b.427 *Fuel tank outlet.* A fuel strainer of 8 to 16 meshes per inch shall be provided either for the fuel tank outlet or for the booster pump. Strainers shall comply with the following.

(a) The clear area of the fuel tank outlet strainer shall not be less than 5 times the area of the fuel tank outlet line.

(b) The diameter of the strainer shall not be less than the diameter of the fuel tank outlet.

(c) Finger strainers shall be accessible for inspection and cleaning.

§ 4b.428 *Under-wing fueling provisions.* Under-wing fuel tank connections shall be provided with means to prevent the escape of hazardous quantities of fuel from the tank in the event of malfunctioning of the fuel entry valve while the cover plate is removed. In addition to the normal means provided in the airplane for limiting the tank content, a means shall be installed to prevent damage to the tank in case of failure of the normal means.

FUEL SYSTEM COMPONENTS

§ 4b.430 *Fuel pumps*—(a) *Main pumps.* (1) If the engine fuel supply is maintained by means of pumps, one fuel pump for each engine shall be engine-driven.

(2) Fuel pumps shall meet the pertinent flow requirements of § 4b.413.

(3) All positive displacement fuel pumps shall incorporate an integral by-pass, unless provision is made for a continuous supply of fuel to all engines in case of failure of any one pump. Engine fuel injection pumps which are approved as an integral part of the engine need not incorporate a by-pass.

(4) If the emergency fuel pumps are all dependent upon the same source of motive power, the main fuel pumps shall be capable of providing sufficient fuel flow and pressure to maintain level flight at maximum weight and normal cruising power at an altitude of 6,000 feet with 110° F. fuel without the aid of any emergency fuel pump.

(b) *Emergency pumps.* (1) Emergency fuel pumps shall be provided to permit supplying all engines with fuel in case of failure of any one main fuel pump, except in the case of installations in which the only fuel pump used in the system is an engine fuel injection pump which is approved as an integral part of the engine.

(2) Emergency fuel pumps shall be available for immediate use in case of failure of any other fuel pump. No manipulation of fuel valves shall be necessary on the part of the crew to make an emergency fuel pump available to the engine which it is normally intended to serve when the fuel system is being operated in the configuration complying with the provisions of § 4b.411.

§ 4b.431 *Fuel pump installation.* (a) Provision shall be made to maintain the fuel pressure at the inlet to the carburetor within the range of limits established for proper engine operation.

(b) When necessary for the maintenance of the proper fuel delivery pressure, a connection shall be provided to transmit the carburetor air intake static pressure to the proper fuel pump relief valve connection. In such cases, to avoid erroneous fuel pressure reading, the gauge balance lines shall be independently connected to the carburetor inlet pressure.

§ 4b.432 *Fuel system lines and fittings.* (a) Fuel lines shall be installed and supported to prevent excessive vibration and to withstand loads due to fuel pressure and due to accelerated flight conditions.

(b) Fuel lines which are connected to components of the airplane between which relative motion could exist shall incorporate provisions for flexibility.

(c) Flexible connections in fuel lines which may be under pressure and subjected to axial loading shall employ flex-

ible hose assemblies rather than hose clamp connections.

(d) Flexible hose shall be of an approved type or shall be shown to be suitable for the particular application.

(e) Flexible hoses which might be adversely affected by exposure to high temperatures shall not be employed in locations where excessive temperatures will exist during operation or after engine shut-down.

§ 4b.433 *Fuel lines and fittings in designated fire zones.* Fuel lines and fittings in all designated fire zones (see § 4b.480) shall comply with the provisions of § 4b.483.

§ 4b.434 *Fuel valves.* In addition to the requirements of § 4b.482 for shut-off means, all fuel valves shall be provided with positive stops or suitable index provisions in the "on" and "off" positions and shall be supported so that loads resulting from their operation or from accelerated flight conditions are not transmitted to the lines attached to the valve.

§ 4b.435 *Fuel strainer.* A fuel strainer shall be provided between the fuel tank outlet and the carburetor inlet and shall comply with the following:

(a) If an engine-driven fuel pump is provided, the strainer shall be located between the tank outlet and the engine-driven pump inlet.

(b) The fuel strainer shall be accessible for drainage and cleaning, and the strainer screen shall be easily removable.

(c) The strainer shall be mounted in a manner not to cause its weight to be supported by the connecting lines or by the inlet or outlet connections of the strainer itself.

§ 4b.436 *Fuel system drains.* Drainage of the system shall be accomplished by fuel strainer drains and other drains as provided in § 4b.424. The following shall apply:

(a) Drains shall discharge clear of all portions of the airplane and shall incorporate means for positive locking of the drain in the closed position, either manually or automatically.

(b) All fuel system drains shall be accessible.

(c) If drainage of the fuel strainer permits compliance with paragraphs (a) and (b) of this section, no additional drains need be provided unless it is possible for a hazardous quantity of water or sediment to be trapped therein. (See also § 4b.483 (c).)

§ 4b.437 *Fuel jettisoning system.* If the maximum take-off weight for which the airplane is certificated exceeds 105 percent of the certificated maximum landing weight, provision shall be made for the jettisoning of fuel from the maximum take-off to the maximum landing weight.

(a) The average rate of fuel jettisoning shall be 1 percent of the maximum take-off weight per minute, except that the time required to jettison the fuel need not be less than 10 minutes. Compliance with these provisions shall be shown at maximum take-off weight, with flaps and landing gear up, and in the following flight conditions:

(1) Power-off glide at a speed of 1.4 V_{s_1}.

(2) Climb at the one-engine-inoperative best rate-of-climb speed with the critical engine inoperative, the remaining engine(s) at maximum continuous power.

(3) Level flight at a speed of 1.4 V_{s_1}, if the results of tests in conditions specified in subparagraphs (1) and (2) of this paragraph indicate that this condition could be critical.

(b) During the flight tests prescribed in paragraph (a) of this section it shall be demonstrated that the fuel jettisoning system complies with the following provisions.

(1) The fuel jettisoning system and its operation shall be free of fire hazard.

(2) The fuel shall discharge clear of all portions of the airplane.

(3) Fuel or fumes shall not enter any portion of the airplane.

(4) The jettisoning operation shall not affect adversely the controllability of the airplane.

(c) The design of the jettisoning system shall be such that it would not be possible to jettison fuel in the tanks used for take-off and landing below the level providing 45 minutes flight at 75 percent maximum continuous power, except that it shall be permissible to jettison all fuel where an auxiliary control is provided independent of the main jettisoning control.

(d) The fuel jettisoning valve shall permit the flight personnel to close the valve during any portion of the jettisoning operation. (See § 4b.475 for fuel jettisoning system controls.)

(e) Unless it is demonstrated that lowering of the flaps does not adversely affect fuel jettisoning, a placard shall be provided adjacent to the jettisoning control to warn flight personnel against jettisoning fuel while the flaps are lowered. A notation to this effect shall also be included in the Airplane Flight Manual. (See § 4b.740.)

OIL SYSTEM

§ 4b.440 *General.* (a) Each engine shall be provided with an independent oil system capable of supplying the engine with an appropriate quantity of oil at a temperature not exceeding the maximum which has been established as safe for continuous operation. (For oil system instruments see §§ 4b.604 and 4b.735.)

(b) The oil tank capacity available for the use of the engine shall not be less than the product of the endurance of the airplane under critical operating conditions times the maximum permissible oil consumption rate of the engine under the same conditions, plus a suitable margin to assure system circulation. In lieu of a rational analysis of airplane range, a fuel-oil ratio of 30:1 by volume shall be acceptable for airplanes not provided with a reserve or transfer system.

(c) If either an oil transfer system or a reserve oil system is provided, the total oil capacity need not exceed one gallon for each 40 gallons of fuel capacity.

(d) Oil-fuel ratios lower than those prescribed in paragraphs (b) and (c) of this section shall be acceptable if substantiated by data on the actual oil consumption of the engine.

(e) The ability of the oil cooling provisions to maintain the oil inlet temperature to the engine at or below the maximum established value shall be demonstrated in accordance with pertinent provisions of §§ 4b.450 through 4b.454.

§ 4b.441 *Oil tank construction.* The following requirements shall apply to the construction of the oil tank.

(a) *Oil tank expansion space.* (1) Oil tanks shall have an expansion space of not less than either 10 percent of the tank capacity or 0.5 gallon, whichever is the greater.

(2) Reserve oil tanks which have no direct connection to any engine shall have an expansion space which is not less than 2 percent of the tank capacity.

(3) It shall not be possible to fill the oil tank expansion space inadvertently when the airplane is in the normal ground attitude.

(b) *Oil tank filler connection.* (1) Recessed oil tank filler connections which retain any appreciable quantity of oil shall incorporate a drain, and the drain shall discharge clear of all portions of the airplane.

(2) The oil tank filler cap shall provide an oil-tight seal.

(3) Oil tank filler connections shall be marked as prescribed in § 4b.738 (b).

(c) *Oil tank vent.* (1) Oil tanks shall be vented from the top portion of the expansion space in such a manner that venting of the tank is effective under all normal flight conditions.

(2) Oil tank vents shall be arranged so that condensation of water vapor which might freeze and obstruct the line cannot accumulate at any point. (See also § 4b.483 (c).)

(d) *Oil tank outlet.* Provision shall be made either to prevent entrance into the tank itself or into the tank outlet of any foreign object which might obstruct the flow of oil through the system. The oil tank outlet shall not be enclosed by any screen or guard which would reduce the flow of oil below a safe value at any operating temperature condition.

(e) *Flexible oil tank liners.* Flexible oil tank liners shall be of an approved type or shall be shown to be suitable for the particular application.

§ 4b.442 *Oil tank tests.* (a) Oil tanks shall be capable of withstanding without failure all vibration, inertia, and fluid loads to which they would be subjected in operation.

(b) The provisions of § 4b.421 shall be applicable to oil tanks, except as follows.

(1) The test pressure specified in § 4b.421 (a) shall be 5 p. s. i.

(2) The test fluid specified in § 4b.421 (c) shall be oil at a temperature of 250° F.

§ 4b.443 *Oil tank installation.* The oil tank installation shall comply with the provisions of § 4b.422, except that the location of an engine oil tank in a designated fire zone shall be acceptable if the tank and its supports are of fireproof construction to the extent that damage

by fire to any nonfireproof parts would not result in leakage or spillage of oil.

§ 4b.444 *Oil lines and fittings*—(a) *General.* The provisions of § 4b.432 shall be applicable to oil lines.

(b) *Lines and fittings in designated fire zones.* Oil lines and fittings in all designated fire zones (see § 4b.480) shall comply with the provisions of § 4b.483.

(c) *Engine breather lines.* (1) Engine breather lines shall be arranged so that condensation of water vapor which might freeze and obstruct the line cannot accumulate at any point.

(2) Breathers shall discharge in a location which will not constitute a fire hazard in case foaming occurs and in a manner so that the emitted oil will not impinge upon the pilot windshield.

(3) The breather shall not discharge into the engine air induction system. (See also § 4b.483 (c).)

§ 4b.445 *Oil valves.* (a) The requirements of § 4b.482 for shut-off means shall be complied with. Closing of oil shut-off means shall not prevent feathering the propeller.

(b) All oil valves shall be provided with positive stops or suitable index provisions in the "on" and "off" positions, and they shall be supported so that loads resulting from their operation or from accelerated flight conditions are not transmitted to the lines attached to the valve.

§ 4b.446 *Oil radiators.* (a) Oil radiators shall be capable of withstanding without failure all vibration, inertia, and oil pressure loads to which they would be subjected in operation.

(b) Oil radiator air ducts shall be located so that, in case of fire, flames issuing from normal openings of the engine nacelle cannot impinge directly upon the radiator.

§ 4b.447 *Oil filters.* If the airplane is equipped with an oil filter, the filter shall be constructed or installed in such a manner that complete blocking of the flow through the filter element will not prevent the safe operation of the engine oil supply system.

§ 4b.448 *Oil system drains.* Accessible drains shall be provided to permit safe drainage of the entire oil system and shall incorporate means for the positive locking of the drain in the closed position, either manually or automatically. (See also § 4b.483 (c).)

§ 4b.449 *Propeller feathering system.* (a) If the propeller feathering system is dependent upon the use of the engine oil supply, provision shall be made to trap a quantity of oil in the tank in case the supply becomes depleted due to failure of any portion of the lubricating system other than the tank itself.

(b) The quantity of trapped oil shall be sufficient to accomplish the feathering operation and shall be available only to the feathering pump.

(c) The ability of the system to accomplish feathering with the trapped supply of oil shall be demonstrated. It shall be acceptable to make this demonstration on the ground.

COOLING SYSTEM

§ 4b.450 *General.* The powerplant cooling provisions shall be capable of maintaining the temperatures of major powerplant components, engine fluids, and the carburetor intake air within the established safe values under all conditions of ground and flight operation. (For cooling system instruments see §§ 4b.604 and 4b.734.)

§ 4b.451 *Cooling tests*—(a) *General.* Compliance with the provisions of § 4b.450 shall be demonstrated under critical ground, water, and flight operating conditions. If the tests are conducted under conditions which deviate from the maximum anticipated air temperature (see paragraph (b) of this section), the recorded powerplant temperatures shall be corrected in accordance with the provisions of paragraphs (c) and (d) of this section. The corrected temperatures determined in this manner shall not exceed the maximum established safe values. The fuel used during the cooling tests shall be of the minimum octane number approved for the engines involved, and the mixture settings shall be those used in normal operation. The test procedures shall be as outlined in §§ 4b.452 through 4b.454.

(b) *Maximum anticipated air temperature.* The maximum anticipated air temperature (hot day condition) shall be 100° F. at sea level, decreasing from this value at the rate of 3.6° F. per thousand feet of altitude above sea level until a temperature of −67° F. is reached above which altitude the temperature shall be constant at −67° F.

(c) *Correction factor for cylinder head, oil inlet, carburetor air, and engine coolant outlet temperatures.* The cylinder head, oil inlet, carburetor air, and engine coolant outlet temperatures shall be corrected by adding the difference between the maximum anticipated air temperature and the temperature of the ambient air at the time of the first occurrence of maximum head, air, oil, or coolant temperature recorded during the cooling test, unless a more rational correction is shown to be applicable.

(d) *Correction factor for cylinder barrel temperatures.* Cylinder barrel temperatures shall be corrected by adding 0.7 of the difference between the maximum anticipated air temperature and the temperature of the ambient air at the time of the first occurrence of the maximum cylinder barrel temperature recorded during the cooling test, unless a more rational correction is shown to be applicable.

§ 4b.452 *Climb cooling test procedure.* (a) The climb cooling test shall be conducted with the critical engine inoperative and its propeller feathered.

(b) All remaining engines shall be operated at their maximum continuous power or at full throttle when above the critical altitude.

(c) After stabilizing temperatures in flight, the climb shall be started at or below the lower of the two following altitudes and shall be continued until at least 5 minutes after the occurrence of the highest temperature recorded, or until the maximum altitude is reached for which certification is desired:

(1) 1,000 feet below the engine critical altitude,

(2) 1,000 feet below the maximum altitude at which the rate of climb is equal to that established in accordance with § 4b.120 (c).

(d) The climb shall be conducted at an air speed which does not exceed the speed used in establishing the rate of climb required in § 4b.120 (c). It shall be acceptable to conduct the climb cooling test in conjunction with the take-off cooling test of § 4b.453.

§ 4b.453 *Take-off cooling test procedure.* A take-off cooling test shall be conducted to demonstrate cooling during take-off and during subsequent climb with one engine inoperative. The following procedure shall be applicable.

(a) The take-off cooling test shall be commenced by stabilizing temperatures during level flight with all engines operating at 75 percent of maximum continuous power with the appropriate cowl flap and shutter settings.

(b) After all temperatures have stabilized, the climb shall be started at the lowest practicable altitude and shall be conducted with one engine inoperative and its propeller feathered.

(c) The remaining engines shall be operated at take-off rpm and power (or at full throttle when above the take-off critical altitude) for the same time interval as take-off power is used during determination of the take-off flight path (see § 4b.116).

(d) At the end of the time interval prescribed in paragraph (c) of this section the power shall be reduced to the maximum continuous power and the climb continued until at least 5 minutes after the occurrence of the highest temperature recorded.

(e) The speed used during take-off power operation (paragraph (c) of this section) shall not exceed the speed used during determination of the take-off flight path (see § 4b.116).

§ 4b.454 *Cooling test procedure for flying boat operation.* In the case of flying boats, cooling shall be demonstrated during taxying down wind for 10 minutes at 5 mph above the step speed.

§ 4b.455 *Liquid cooling systems.* Each liquid-cooled engine shall be provided with an independent coolant system. The coolant system shall be so arranged that no air or vapor can be trapped in any portion of the system other than the expansion tank, either during filling or during operation. No flammable coolant shall be used. Means shall be provided to prevent excessive pressures from being generated in the cooling system.

§ 4b.456 *Coolant tank*—(a) *General.* The tank shall have a usable coolant capacity of not less than one gallon and shall be capable of withstanding without failure all vibration, inertia, and fluid loads to which it would be subjected in operation. Coolant tanks shall be provided with an expansion space of not less than 10 percent of the total coolant system capacity. It shall not be possible inadvertently to fill the expansion space

with the airplane in the normal ground attitude.

(b) *Coolant tank tests.* The provisions of § 4b.421 shall be applicable to coolant tanks, except as follows.

(1) The test pressure specified in § 4b.421 (a) shall be either the sum of the pressure developed during the maximum ultimate acceleration with a full tank plus the maximum working pressure of the system, or 1.25 times the maximum working pressure of the system, whichever is the greater.

(2) The test fluid specified in § 4b.421 (c) shall be coolant at operating temperature.

(c) *Coolant tank installation.* (1) Coolant tanks shall be supported so that the tank loads will be distributed over a large portion of the tank surface.

(2) Pads shall be provided to prevent chafing between the tank and its supports.

(3) Materials employed for padding shall be nonabsorbent or shall be treated to prevent the absorption of fluids.

(d) *Coolant tank filler connection.* (1) Recessed coolant tank filler connections which retain any appreciable quantity of coolant shall incorporate a drain, and the drain shall discharge clear of all portions of the airplane.

(2) Coolant tank filler connections shall be marked as prescribed in § 4b.738 (b).

§ 4b.457 *Coolant system installation.* The following requirements shall apply to the installation of the coolant system components.

(a) *Coolant lines.* The provisions of § 4b.432 shall be applicable to coolant lines.

(b) *Fire-resistant coolant lines and fittings.* If the coolant used will ignite and burn under the conditions of powerplant fires, all lines and fittings located within designated fire zones shall comply with the provisions of § 4b.483.

(c) *Coolant radiators.* (1) Coolant radiators shall be capable of withstanding without failure all vibration, inertia, and coolant pressure loads to which they would be subjected in operation.

(2) Coolant radiators shall be supported in a manner which will permit expansion due to operating temperatures and which will prevent the transmittal of harmful vibration to the radiator.

(3) The air intake duct to the coolant radiator shall be located so that in case of fire flames issuing from normal openings of the engine nacelle cannot impinge directly upon the radiator.

(d) *Coolant system drains.* (1) One or more accessible drains shall be provided to permit drainage of the coolant system, including the coolant tank, radiator, and the engine, when the airplane is in the normal ground attitude.

(2) Drains shall discharge clear of all portions of the airplane and shall incorporate means for positive locking of the drain in the closed position.

INDUCTION AND EXHAUST SYSTEMS

§ 4b.460 *General.* (a) The engine air induction system shall permit supplying the proper quantity of air to the engine under all conditions of operation.

(b) The induction system shall provide air for proper fuel metering and mixture distribution with the induction system valves in any position.

(c) Each engine shall be provided with an alternate air source.

(d) Air intakes shall not open within the cowling, unless that portion of the cowling is isolated from the engine accessory section by means of a fireproof diaphragm, or unless provision is made to prevent the emergence of backfire flames.

(e) Alternate air intakes shall be so located as to preclude the entrance of rain, ice, or any other foreign matter.

§ 4b.461 *Induction system de-icing and anti-icing provisions*—(a) *General.* The engine air induction system shall incorporate means for the prevention and elimination of ice accumulations.

(b) *Heat rise.* Unless it is demonstrated that other means will accomplish the intent of paragraph (a) of this section, compliance with the following heat-rise provisions shall be demonstrated in air free of visible moisture at a temperature of 30° F.

(1) Airplanes equipped with altitude engines employing conventional venturi carburetors shall have a preheater capable of providing a heat rise of 120° F. when the engine is operating at 60 percent of its maximum continuous power.

(2) Airplanes equipped with altitude engines employing carburetors which embody features tending to reduce the possibility of ice formation shall have a preheater capable of providing a heat rise of 100° F. when the engine is operating at 60 percent of its maximum continuous power.

§ 4b.462 *Carburetor air preheater design.* Carburetor air preheaters shall incorporate the following provisions.

(a) Means shall be provided to assure ventilation of the preheater when the engine is being operated with cold air.

(b) The preheater shall be constructed to permit inspection of exhaust manifold parts which it surrounds and also to permit inspection of critical portions of the preheater itself.

§ 4b.463 *Induction system ducts.* Induction system ducts shall incorporate the following provisions.

(a) Induction system ducts ahead of the first stage of the supercharger shall be provided with drains to prevent hazardous accumulations of fuel and moisture in the ground attitude. The drains shall not discharge in locations which might cause a fire hazard.

(b) Sufficient strength shall be incorporated in the ducts to prevent induction system failures resulting from normal backfire conditions.

(c) Ducts which are connected to components of the airplane between which relative motion could exist shall incorporate provisions for flexibility.

(d) Induction system ducts within any fire zone for which a fire-extinguishing system is required shall be of fire-resistant construction.

§ 4b.464 *Induction system screens.* If induction system screens are employed, they shall comply with the following provisions:

(a) Screens shall be located upstream from the carburetor.

(b) Screens shall not be located in portions of the induction system which constitute the only passage through which air can reach the engine, unless the screen is so located that it can be de-iced by heated air.

(c) De-icing of induction system screens by means of alcohol alone shall not be acceptable.

(d) It shall not be possible for fuel to impinge upon the screens.

§ 4b.465 *Carburetor air cooling.* Installations employing two-stage superchargers shall be provided with means to maintain the air temperature at the inlet to the carburetor at or below the maximum established value. The demonstration of this provision shall be accomplished in accordance with § 4b.451.

§ 4b.466 *Inter-coolers and after-coolers.* Inter-coolers and after-coolers shall be capable of withstanding without failure all vibration, inertia, and air pressure loads to which they would be subjected in operation.

§ 4b.467 *Exhaust system and installation components*—(a) *General.* (1) The exhaust system shall be constructed and arranged to assure the safe disposal of exhaust gases without the existence of a fire hazard or carbon monoxide contamination of air in personnel compartments.

(2) Unless appropriate precautions are taken, exhaust system parts shall not be located in hazardous proximity to portions of any system carrying flammable fluids or vapors nor shall they be located under portions of such systems where the latter could be subject to leakage.

(3) All airplane components upon which hot exhaust gases might impinge, or which could be subjected to high temperatures due to proximity to exhaust system parts, shall be constructed of fireproof material. All exhaust system components shall be separated by means of fireproof shields from adjacent portions of the airplane which are outside the engine compartment.

(4) Exhaust gases shall not discharge in a manner to cause a fire hazard with respect to any flammable fluid vent or drain.

(5) Exhaust gases shall not discharge at a location which will cause a glare seriously affecting pilot visibility at night.

(6) All exhaust system components shall be ventilated to prevent the existence of points of excessively high temperature.

(7) Exhaust shrouds shall be ventilated or insulated to avoid during normal operation a temperature sufficiently high to ignite any flammable fluids or vapors external to the shrouds.

(b) *Exhaust piping.* (1) Exhaust piping shall be constructed of material resistant to heat and corrosion, and shall incorporate provisions to prevent failure due to expansion when heated to operating temperatures.

(2) Exhaust pipe shall be supported to withstand all vibration and inertia

NACA LIBRARY
LRC 1-A

loads to which they would be subjected in operation.

(3) Portions of the exhaust piping which are connected to components between which relative motion could exist shall incorporate provisions for flexibility.

(c) *Exhaust heat exchangers.* (1) Exhaust heat exchangers shall be constructed and installed to assure their ability to withstand without failure all vibration, inertia, and other loads to which they would be subjected in operation.

(2) Heat exchangers shall be constructed of materials which are suitable for continued operation at high temperatures and which are resistant to corrosion due to elements contained in exhaust gases.

(3) Provision shall be made for the inspection of all critical portions of exhaust heat exchangers.

(4) Heat exchangers shall incorporate cooling provisions wherever they are subject to contact with exhaust gases.

(5) Heat exchangers or muffs shall incorporate no stagnant areas or liquid traps which would increase the possibility of ignition of flammable fluids or vapors which might be present in case of failure or malfunctioning of components carrying flammable fluids.

(d) *Exhaust heating of ventilating air.* If an exhaust heat exchanger is used for heating ventilating air, a secondary heat exchanger shall be provided between the primary exhaust gas heat exchanger and the ventilating air system, unless it is demonstrated that other means used preclude harmful contamination of the ventilating air.

(e) *Exhaust driven turbo-superchargers.* (1) Exhaust driven turbines shall be of an approved type or shall be shown to be suitable for the particular application. They shall be installed and supported to assure their safe operation between normal inspection and overhaul periods.

(2) Provision for expansion and flexibility shall be made between exhaust conduits and the turbine.

(3) Provision shall be made for lubrication of the turbine and for cooling of those turbine parts where the temperatures are critical.

(4) Means shall be provided so that, in the event of malfunctioning of the normal turbo-supercharger control system, the turbine speed will not be greater than its maximum allowable value. The components provided for this purpose shall be independent of the normal turbo-supercharger controls with the exception of the waste gate operating components themselves.

POWERPLANT CONTROLS AND ACCESSORIES

§ 4b.470 *Powerplant controls; general.* The provisions of § 4b.353 shall be applicable to all powerplant controls with respect to location, grouping, and direction of motion, and the provisions of § 4b.737 shall be applicable to all powerplant controls with respect to marking. In addition all powerplant controls shall comply with the following.

(a) Controls shall be so located that they cannot be inadvertently operated by personnel entering, leaving, or making normal movements in the cockpit.

(b) Controls shall maintain any set position without constant attention by flight personnel. They shall not tend to creep due to control loads or vibration.

(c) Flexible controls shall be of an approved type or shall be shown to be suitable for the particular application.

(d) Controls shall have strength and rigidity to withstand operating loads without failure and without excessive deflection.

§ 4b.471 *Throttle and A. D. I. system controls.* (a) A separate throttle control shall be provided for each engine. Throttle controls shall be grouped and arranged to permit separate control of each engine and also simultaneous control of all engines.

(b) Throttle controls shall afford a positive and immediately responsive means of controlling the engines.

(c) If an antidetonant injection system is provided, the flow of ADI fluid shall be automatically controlled in relation to the amount of power produced by the engine. In addition to the automatic control, a separate control shall be provided for the ADI pumps.

§ 4b.472 *Ignition switches.* (a) Ignition switches shall provide control for each ignition circuit on each engine.

(b) Means shall be provided for quickly shutting off all ignition by the grouping of switches or by providing a master ignition control.

(c) If a master ignition control is provided, a guard shall be incorporated to prevent inadvertent operation of the control.

§ 4b.473 *Mixture controls.* (a) If mixture controls are provided, a separate control shall be provided for each engine. The mixture controls shall be grouped and arranged to permit separate control of each engine and also simultaneous control of all engines.

(b) Any intermediate position of the mixture control which corresponds with a normal operating setting shall be provided with a sensory and a visual identification.

(c) The mixture controls shall be placed in a location accessible to both pilots, except where a separate flight engineer station with a control panel is provided, in which case the mixture controls shall be accessible to the flight engineer.

§ 4b.474 *Propeller controls*—(a) *Propeller speed and pitch controls.* (1) A separate propeller speed and pitch control shall be provided for each propeller. The propeller speed and pitch controls shall be grouped and arranged to permit separate control of each propeller and also simultaneous control of all propellers.

(2) The propeller speed and pitch controls shall provide for synchronization of all propellers. (See also § 4b.404.)

(3) Propeller speed and pitch control(s) shall be placed to the right of the pilot's throttle and shall be at least 1 inch lower than the throttle controls.

(b) *Propeller feathering controls.* (1) A separate propeller feathering control shall be provided for each propeller.

(2) Propeller feathering controls shall be provided with means to prevent inadvertent operation.

(3) If feathering is accomplished by movement of the propeller pitch or speed control lever, provision shall be made to prevent the movement of this control to the feathering position during normal operation.

(c) *Propeller reversing controls.* Propeller reversing controls shall incorporate a means to prevent their inadvertent movement to the reverse position. The means provided shall require a distinct and unmistakable operation by the crew in order to place the control in the reverse regime both in flight and on the ground.

§ 4b.475 *Fuel system controls.* (See also § 4b.434.)

(a) Fuel jettisoning system controls shall be provided with guards to prevent their inadvertent operation.

(b) Fuel jettisoning system controls shall not be located in close proximity to fire extinguisher controls nor to any other controls intended to combat fire.

§ 4b.476 *Carburetor air preheat controls.* Separate carburetor air preheat controls shall be provided to regulate the temperature of the carburetor air for each engine.

§ 4b.476a *Supercharger controls.* Supercharger controls shall be accessible to the pilots, except where a separate flight engineer station with a control panel is provided, in which case they shall be accessible to the flight engineer.

§ 4b.477 *Powerplant accessories.* (a) Engine mounted accessories shall be of a type approved for installation on the engine involved, and shall utilize the provisions made on the engine for mounting.

(b) Items of electrical equipment subject to arcing or sparking shall be installed to minimize the possibility of their contact with any flammable fluids or vapors which might be present in a free state.

(c) If continued rotation of an engine-driven cabin supercharger or any remote accessory driven by the engine will constitute a hazard in case malfunctioning occurs, means shall be provided to prevent hazardous rotation of such accessory without interfering with the continued operation of the engine. (See also § 4b.371 (c).)

NOTE: Hazardous rotation may involve consideration of mechanical damage or sustained air flows which may be dangerous under certain conditions.

§ 4b.478 *Engine ignition systems.* (a) Battery ignition systems shall be supplemented with a generator which is automatically made available as an alternate source of electrical energy to permit continued engine operation in the event of the depletion of any battery.

(b) The capacity of batteries and generators shall be sufficient to meet the simultaneous demands of the engine ignition system and the greatest demands of any airplane electrical system components which would draw electrical energy from the same source.

(1) The design of the engine ignition system shall take into consideration the condition of an inoperative generator and the condition of a completely depleted battery when the generator is running at its normal operating speed.

(2) If only one battery is provided the design of the engine ignition system shall take into consideration the condition in which the battery is completely depleted and the generator is operating at idling speed.

(3) Portions of magneto ground wires for separate ignition circuits which lie on the engine side of the fire wall shall be installed, located, or protected so as to minimize the possibility of simultaneous failure of two or more wires as a result of mechanical damage, electrical faults, etc.

(4) Ground wires for any engine shall not be routed through fire zones, except those associated with the engine which the wires serve, unless those portions of the wires which are located in such fire zones are fireproof or are protected against the possibility of damage by fire in a manner to render them fireproof. (See § 4b.472 for ignition switches.)

(5) Ignition circuits shall be electrically independent of all other electrical circuits except circuits used for analyzing the operation of the ignition system.

(c) Means shall be provided to warn flight personnel if malfunctioning of any part of the electrical system is causing the continuous discharging of a battery which is necessary for engine ignition. (See § 4b.472 for ignition switches.)

POWERPLANT FIRE PROTECTION

§ 4b.480 *Designated fire zones.* (a) Designated fire zones shall comprise the following regions:

(1) Engine power section,

(2) Engine accessory section,

(3) Complete powerplant compartments in which no isolation is provided between the engine power section and the engine accessory section,

(4) Auxiliary power unit compartments,

(5) Fuel-burning heaters and other combustion equipment installations as defined by § 4b.386.

NOTE: See also § 4b.385.

(b) Designated fire zones shall be protected from fire by compliance with §§ 4b.481 through 4b.490.

(c) The nacelle area immediately behind the fire wall shall comply with the provisions of §§ 4b.385, 4b.463 (d), 4b.478 (b), (4), 4b.481 (c), 4b.482 through 4b.485 and 4b.489. If a retractable landing gear is located in this area, compliance with this paragraph is required only with the landing gear retracted.

§ 4b.481 *Flammable fluids.* (a) No tanks or reservoirs which are a part of a system containing flammable fluids or gases shall be located in designated fire zones, except where the fluid contained, the design of the system, the materials used in the tank, the shut-off means, all connections, lines, and controls are such as to provide an equally high degree of safety.

(b) Not less than one-half inch of clear air space shall be provided between any tank or reservoir and a fire wall or shroud isolating a designated fire zone.

(c) No component of a flammable fluid-carrying system shall be located in close proximity to materials which can absorb such a fluid.

§ 4b.482 *Shut-off means.* (a) Means for each individual engine and for each individual fire zone specified in § 4b.480 (a) (4) and (5) shall be provided for shutting off or otherwise preventing hazardous quantities of fuel, oil, de-icer, and other flammable fluids from flowing into, within, or through any designated fire zone, except that means need not be provided to shut off flow in lines forming an integral part of an engine. Closing the fuel shutoff valve for any engine shall not make any of the fuel supply unavailable to the remaining engines.

(b) Operation of the shutoff means shall not interfere with the subsequent emergency operation of other equipment, such as feathering the propeller.

(c) The shut-off means shall be located outside of designated fire zones, unless an equally high degree of safety is otherwise provided (see § 4b.481). It shall be shown that no hazardous quantity of flammable fluid could drain into any designated fire zone after shutting-off has been accomplished.

(d) Provisions shall be made to guard against inadvertent operation of the shutoff means and to make it possible for the crew to reopen the shutoff means in flight after it has once been closed.

§ 4b.483 *Lines and fittings.* All lines and fittings carrying flammable fluids or gases in designated fire zones shall comply with the provisions of paragraphs (a) through (c) of this section.

(a) Lines and fittings which are under pressure, or which attach directly to the engine, or which are subject to relative motion between components shall be flexible, fire-resistant lines with fire-resistant end fittings of the permanently attached, detachable, or other approved type. The provisions of this paragraph shall not apply to those lines and fittings which form an integral part of the engine.

(b) Lines and fittings which are not subject to pressure or to relative motion between components shall be of fire-resistant materials.

(c) Vent and drain lines and fittings shall be subject to the provisions of paragraphs (a) and (b) of this section, unless a failure of such line or fitting will not result in, or add to, a fire hazard.

§ 4b.484 *Fire extinguisher systems—* (a) *General.* (1) Fire extinguisher systems shall be provided to serve all designated fire zones. This requirement shall be effective with respect to applications for type certificates in accordance with the provisions of § 4b.12. In addition, all other airplanes manufactured after June 30, 1954, shall comply with this requirement, unless the engine power section is completely isolated from the engine accessory section by a fireproof diaphragm complying with the provisions of § 4b.488 and unless the cowling and nacelle skin comply with the provisions of § 4b.487, in which case fire extinguisher systems need not be provided in the engine power section.

(2) The fire extinguishing system, the quantity of extinguishing agent, and the rate of discharge shall be such as to provide two adequate discharges. It shall be possible to direct both discharges to any main engine installation. Individual "one-shot" systems shall be acceptable in the case of auxiliary power units, fuel-burning heaters, and other combustion equipment.

(3) The fire-extinguishing system for a nacelle shall be capable of protecting simultaneously all zones of the nacelle for which protection is provided.

(b) *Fire extinguishing agents.* (1) Extinguishing agents employed shall be methyl bromide, carbon dioxide, or any other agent which has been shown to provide equivalent extinguishing action.

(2) If methyl bromide, carbon dioxide, or any other toxic extinguishing agent is employed, provision shall be made to prevent the entrance of harmful concentration of fluid or fluid vapors into any personnel compartments either due to leakage during normal operation of the airplane or as a result of discharging the fire extinguisher on the ground or in flight even though a defect may exist in the extinguishing system. Compliance with this requirement shall be demonstrated by appropriate tests.

(3) If a methyl bromide system is provided, the containers shall be charged with a dry agent and shall be sealed by the fire extinguisher manufacturer or by any other party employing appropriate recharging equipment.

(c) *Extinguishing agent container pressure relief.* Extinguisher agent containers shall be provided with a pressure relief to prevent bursting of the container due to excessive internal pressures. The following provisions shall apply.

(1) The discharge line from the relief connection shall terminate outside the airplane in a location convenient for inspection on the ground.

(2) An indicator shall be provided at the discharge end of the line to provide a visual indication when the container has discharged.

(d) *Extinguishing agent container compartment temperature.* Under all conditions in which the airplane is intended for operation, the temperature range of the extinguishing agent containers shall be maintained to assure that the pressure in the containers can neither fall below the minimum necessary to provide an adequate rate of extinguisher agent discharge nor rise above a safe limit so that the system will not be prematurely discharged.

(e) *Fire-extinguishing system materials.* Materials in the fire extinguishing system shall not react chemically with the extinguishing agent so as to constitute a hazard. All components of the fire extinguishing systems located in designated fire zones shall be constructed of fireproof materials.

§ 4b.485 *Fire detector systems.* Quick-acting fire detectors of an approved type shall be provided in all designated fire zones, and they shall be sufficient in number and location to assure prompt detection of fire in such zones.

DOT LIBRARY
FOB 10-A

Fire detectors shall comply with the following provisions:

(a) Fire detectors shall be constructed and installed to assure their ability to resist without failure all vibration, inertia, and other loads to which they would be subjected in operation.

(b) Fire detectors shall be unaffected by the exposure to oil, water, or other fluids or fumes which might be present.

(c) Means shall be provided to permit the crew to check in flight the functioning of the electric circuit associated with the fire-detection system.

(d) Wiring and other components of detector systems which are located in fire zones shall be of fire-resistant construction.

(e) Detector system components for any fire zone shall not pass through other fire zones, unless they are protected against the possibility of false warnings resulting from fires in zones through which they pass. This requirement shall not be applicable with respect to zones which are simultaneously protected by the same detector and extinguisher systems.

§ 4b.486 *Fire walls.* All engines, auxiliary power units, fuel-burning heaters, and other combustion equipment which are intended for operation in flight shall be isolated from the remainder of the airplane by means of fire walls, shrouds, or other equivalent means. The following shall apply.

(a) Fire walls and shrouds shall be constructed in such a manner that no hazardous quantity of air, fluids, or flame can pass from the compartment to other portions of the airplane.

(b) All openings in the fire wall or shroud shall be sealed with close-fitting fireproof grommets, bushings, or firewall fittings.

(c) Fire walls and shrouds shall be constructed of fireproof material and shall be protected against corrosion.

§ 4b.487 *Cowling and nacelle skin.* (a) Cowling shall be constructed and supported so as to make it capable of resisting all vibration, inertia, and air loads to which it would be subjected in operation.

(b) Cowling shall have drainage and ventilation provisions as prescribed in § 4b.489.

(c) On airplanes equipped with a diaphragm complying with § 4b.488, the parts of the accessory section cowling which might be subjected to flame in the event of a fire in the engine power section of the nacelle shall be constructed of fireproof material and shall comply with the provisions of § 4b.486.

(d) Those portions of the cowling which would be subjected to high temperatures due to their proximity to exhaust system parts or exhaust gas impingement shall be constructed of fireproof material.

(e) The airplane shall be so designed and constructed that fire originating in the engine power or accessory sections cannot enter, either through openings or by burning through external skin, into any other zone of the nacelle where such fire would create additional hazards. If the airplane is provided with a retractable landing gear, this provision shall apply with the landing gear retracted. Fireproof materials shall be used for all nacelle skin areas which might be subjected to flame in the event of a fire originating in the engine power or accessory sections.

§ 4b.488 *Engine accessory section diaphragm.* Unless equivalent protection can be shown by other means, a diaphragm shall be provided on air-cooled engines to isolate the engine power section and all portions of the exhaust system from the engine accessory compartment. This diaphragm shall comply with the provisions of § 4b.486.

§ 4b.489 *Drainage and ventilation of fire zones.* (a) Provision shall be made for the rapid and complete drainage of all portions of designated fire zones in the event of failure or malfunctioning of components containing flammable fluids. The drainage provisions shall be so arranged that the discharged fluid will not cause an additional fire hazard.

(b) All designated fire zones shall be ventilated to prevent the accumulation of flammable vapors. Ventilation openings shall not be placed in locations which would permit the entrance of flammable fluids, vapors, or flame from other zones. The ventilation provisions shall be so arranged that the discharged vapors will not cause an additional fire hazard.

(c) Except with respect to the engine power section of the nacelle and the combustion heater ventilating air ducts, provision shall be made to permit the crew to shut off sources of forced ventilation in any fire zone, unless the extinguishing agent capacity and rate of discharge are based on maximum air flow through the zone.

§ 4b.490 *Protection of other airplane components against fire.* All airplane surfaces aft of the nacelles, in the region of one nacelle diameter on both sides of the nacelle center line, shall be constructed of fire-resistant material. This provision need not be applied to tail surfaces lying behind nacelles, unless the dimensional configuration of the aircraft is such that the tail surfaces could be affected readily by heat, flames, or sparks emanating from a designated fire zone or engine compartment of any nacelle.

SUBPART F—EQUIPMENT

GENERAL

§ 4b.600 *Scope.* The required basic equipment as prescribed in this subpart is the minimum which shall be installed in the airplane for certification. Such additional equipment as is necessary for a specific type of operation is prescribed in the operating rules of this subchapter.

§ 4b.601 *Functional and installational requirements.* Each item of equipment shall be:

(a) Of a type and design appropriate to perform its intended function,

(b) Labeled as to its identification, function, or operational limitations, or any combination of these, whichever is applicable,

(c) Installed in accordance with specified limitations of the equipment,

(d) Demonstrated to function properly in the airplane.

§ 4b.602 *Required basic equipment.* The equipment listed in §§ 4b.603 through 4b.605 shall be the required basic equipment. (See § 4b.600.)

§ 4b.603 *Flight and navigational instruments.* (See § 4b.612 for installation requirements.)

(a) Air-speed indicating system,

(b) Altimeter (sensitive),

(c) Clock (sweep-second),

(d) Free air temperature indicator,

(e) Gyroscopic bank and pitch indicator,

(f) Gyroscopic rate-of-turn indicator (with bank indicator),

(g) Gyroscopic direction indicator,

(h) Magnetic direction indicator,

(i) Rate-of-climb indicator (vertical speed),

(j) Maximum allowable air-speed indicator if an air-speed limitation results from compressibility hazards. (See § 4b.710.)

§ 4b.604 *Powerplant instruments.* (See § 4b.613 for installation requirements.)

(a) Carburetor air temperature indicator for each engine,

(b) Coolant temperature indicator for each liquid-cooled engine,

(c) Cylinder head temperature indicator for each air-cooled engine,

(d) An individual fuel pressure indicator for each engine and either an independent warning device for each engine or a master warning device for all engines with means for isolating the individual warning circuit from the master warning device,

(e) Fuel flowmeter indicator or fuel mixture indicator for each engine not equipped with an automatic altitude mixture control,

(f) Fuel quantity indicator for each fuel tank,

(g) Manifold pressure indicator for each engine,

(h) An individual oil pressure indicator for each engine and either an independent warning device for each engine or a master warning device for all engines with means for isolating the individual warning circuit from the master warning device,

(i) Oil quantity indicator for each oil tank when a transfer or oil reserve supply system is used,

(j) Oil temperature indicator for each engine,

(k) Tachometer for each engine,

(l) Fire warning indicators (see § 4b.485),

(m) A device for each engine capable of indicating to the flight crew during flight any change in the power output, if the engine is equipped with an automatic propeller feathering system the operation of which is initiated by a power output measuring system or if the total engine cylinder displacement is 2,000 cubic inches or more.

(n) A means for each reversing propeller to indicate to the pilot when the propeller is in reverse pitch.

§ 4b.605 *Miscellaneous equipment.* (a) Approved seats for all occupants (see § 4b.358),

(b) Approved safety belts for all occupants (see § 4b.643),

(c) Master switch arrangement for electrical circuits other than ignition (see §§ 4b.623 and 4b.624),

(d) Source(s) of electrical energy (see § 4b.620),

(e) Electrical protective devices (see § 4b.624),

(f) Radio communication system (two-way),

(g) Radio navigation system,

(h) Windshield wiper or equivalent for each pilot,

(i) Ignition switch for each and all engines (see § 4b.472),

(j) Approved portable fire extinguisher (see § 4b.641).

§ 4b.606 *Equipment, systems, and installations*—(a) *Functioning and reliability.* All equipment, systems, and installations the functioning of which is necessary in showing compliance with the regulations in this subchapter shall be designed and installed to insure that they will perform their intended functions reliably under all reasonably foreseeable operating conditions.

(b) *Hazards.* All equipment, systems, and installations shall be designed to safeguard against hazards to the airplane in the event of their malfunctioning or failure.

(c) *Power supply.* Where an installation the functioning of which is necessary in showing compliance with the regulations of this subchapter requires a power supply, such installation shall be considered an essential load on the power supply, and the power sources and the system shall be capable of supplying the following power loads in probable operating combinations and for probable durations:

(1) All loads connected to the system with the system functioning normally;

(2) All essential loads after failure of any one prime mover, power converter, or energy storage device;

(3) All essential loads after failure of any one engine on two- or three-engine airplanes, or after failure of any two engines on four-or-more-engine airplanes.

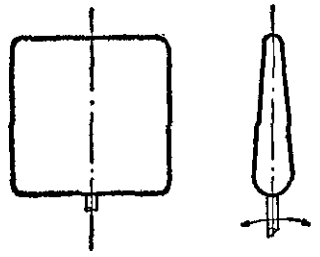

FLAP CONTROL KNOB

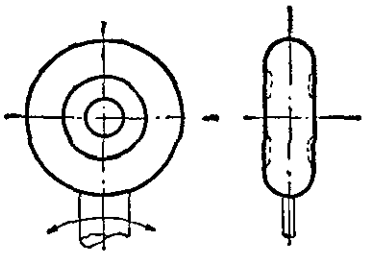

LANDING GEAR CONTROL KNOB

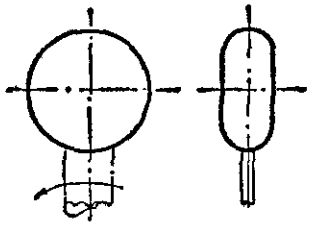

THROTTLE CONTROL KNOB



RPM CONTROL KNOB

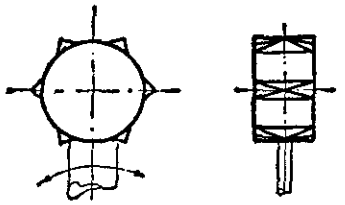

MIXTURE CONTROL KNOB

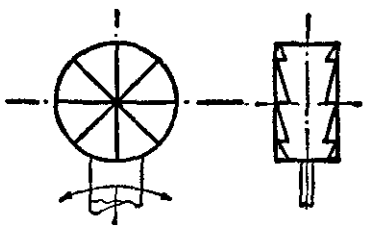

SUPERCHARGER CONTROL KNOB

FIGURE 4b-22—Control knob shapes.

INSTRUMENTS; INSTALLATION

§ 4b.610 *General.* The provisions of §§ 4b.611 through 4b.613 shall apply to the installation of instruments.

§ 4b.611 *Arrangement and visibility of instrument installations.* (a) Flight, navigation, and powerplant instruments for use by each pilot shall be plainly visible to him from his station with the minimum practicable deviation from his normal position and line of vision when he is looking out and forward along the flight path.

(b) Flight instruments required by § 4b.603 shall be grouped in accordance with one of the flight instrument panels in Figure 4b-23 dependent upon which instruments are installed. The panel shall be centered as nearly as practicable about the vertical plane of the pilot's forward vision. The required flight instruments not shown in Figure 4b-23 shall be placed adjacent to the prescribed grouping.

(c) All the required powerplant instruments shall be closely grouped on the instrument panel.

(d) Identical powerplant instruments for the several engines shall be located to prevent any misleading impression as to the engines to which they relate.

(e) Powerplant instruments vital to the safe operation of the airplane shall be plainly visible to the appropriate crew members.

(f) The vibration characteristics of the instrument panel shall be such as not to impair seriously the accuracy of the instruments or to damage them.

§ 4b.612 *Flight and navigational instruments*—(a) *Air-speed indicating systems.* (1) Air-speed indicating instruments shall be of an approved type and shall be calibrated to indicate true air speed at sea level in the standard atmosphere with a minimum practicable instrument calibration error when the corresponding pitot and static pressures are applied to the instrument.

(2) The air-speed indicating system shall be calibrated to determine the system error, i. e., the relation between IAS and CAS, in flight and during the accelerated take-off ground run. The ground run calibration shall be obtained from 0.8 of the minimum value of V_1 to the maximum value of V_2, taking into account the approved altitude and weight range for the airplane. In the ground run calibration, the flap and power settings shall correspond with the values determined in the establishment of the take-off path under the provisions of § 4b.116, assuming the critical engine to fail at the minimum approved value of V_1.

(3) The air-speed error of the installation, excluding the air-speed indicator instrument calibration error, shall not exceed 3 percent or 5 mph, whichever is the greater, throughout the speed range from V_{NO} to 1.3 V_{S_1} with flaps retracted, and from 1.3 V_{S_0} to V_{FE} with flaps in the landing position.

(4) The air-speed indicating system shall be arranged in so far as practicable to preclude malfunctioning or serious

error due to the entry of moisture, dirt, or other substances.

(5) The air-speed indicating system shall be provided with a heated pitot tube or equivalent means of preventing malfunctioning due to icing.

(6) Where duplicate air-speed indicators are required, their respective pitot tubes shall be spaced apart to avoid damage to both tubes in the event of a collision with a bird.

(b) *Static air vent and pressure altimeter systems.* (1) All instruments provided with static air case connections shall be vented to the outside atmosphere through an appropriate piping system.

(2) The vent(s) shall be so located on the airplane that its orifices will be least affected by air flow variation, moisture, or other foreign matter.

(3) The installation shall be such that the system will be air-tight, except for the vent into the atmosphere.

(4) Pressure altimeters shall be of an approved type and shall be calibrated to indicate pressure altitude in standard atmosphere with a minimum practicable instrument calibration error when the corresponding static pressures are applied to the instrument.

(5) The design and installation of the altimeter system shall be such that the error in indicated pressure altitude at sea level in standard atmosphere, excluding instrument calibration error, does not result in a reading more than 20 feet high nor more than 50 feet low in the speed range between 1.3 V_{s_0} (flaps extended) and 1.8V_{s_1} (flaps retracted).

(c) *Magnetic direction indicator.* (1) The magnetic direction indicator shall be installed so that its accuracy will not be excessively affected by the airplane's vibration or magnetic fields of a permanent or transient nature.

(2) After the magnetic direction indicator has been compensated, the calibration shall be such that the deviation in level flight does not exceed ±10° on any heading.

(3) A calibration placard shall be provided as specified in § 4b.733.

(d) *Automatic pilot system.* If an automatic pilot system is installed, it shall be of an approved type, and the following shall be applicable:

(1) The actuating (servo) devices shall be of such design that they can, when necessary, be disengaged positively and be overpowered by the pilot to enable him to maintain control of the airplane.

(2) A means shall be provided to indicate readily to the pilot the alignment of the actuating device in relation to the control system which it operates, except when automatic synchronization is provided.

(3) The manually operated control(s) for the system's operation shall be readily accessible to the pilot.

(4) The automatic pilot system shall be of such design and so adjusted that, within the range of adjustment available to the human pilot, it cannot produce hazardous loads on the airplane or create hazardous deviations in the flight path under any conditions of flight appropriate to its use either during normal operation or in the event of malfunctioning, assuming that corrective action is initiated within a reasonable period of time.

(e) *Instruments utilizing a power supply.* Each required flight instrument utilizing a power supply shall be provided with two independent sources of power, a means of selecting either power source, and a means of indicating the adequacy of the power being supplied to the instrument. The installation and power supply system shall be such that failure of one instrument, or of the energy supply from one source, or a fault in any part of the power distribution system, will not interfere with the proper supply of energy from the other source. (See also §§ 4b.606 (c) and 4b.623.)

(f) *Duplicate instrument systems.* If duplicate sets of flight instruments are required by the regulations in this subchapter, each set shall be provided with a completely independent operating system. Additional instruments shall not be connected to the first pilot system. If additional instruments are connected to the other system, provision shall be made to disconnect or isolate in flight such additional instruments.

§ 4b.613 *Powerplant instruments*—(a) *Instrument lines.* (1) Powerplant instrument lines carrying flammable fluids or gases under pressure shall be provided with restricted orifices or equivalent safety devices at the source of the pressure to prevent the escape of excessive fluid or gas in case of line failure.

(2) The provisions of §§ 4b.432 and 4b.433 shall be made applicable to powerplant instrument lines.

(b) *Fuel quantity indicator.* Means shall be provided to indicate to the flight crew the quantity in gallons or equivalent units of usable fuel in each tank during flight. The following shall apply.

(1) Tanks, the outlets and air spaces of which are interconnected, shall be considered as one tank for the purpose of providing separate indicators.

(2) Exposed sight gauges shall be protected against damage.

(3) Fuel quantity indicators shall be calibrated to read zero during level flight when the quantity of fuel remaining in the tank is equal to the unusable fuel supply as defined by § 4b.416 (see § 4b.736).

(c) *Fuel flowmeter system.* When a flowmeter system is installed, the metering component shall include a means for by-passing the fuel supply in the event that malfunctioning of the metering component results in a severe restriction to fuel flow.

(d) *Oil quantity indicator.* (1) A stick gauge or other equivalent means shall be provided to indicate the quantity of oil in each tank. (See § 4b.735.)

(2) If an oil transfer system or a reserve oil supply system is installed, means shall be provided to indicate to the crew during flight the quantity of oil in each tank.

ELECTRICAL SYSTEMS AND EQUIPMENT

§ 4b.620 *General.* The provisions of §§ 4b.621 through 4b.627 shall apply to all electrical systems and equipment. (See also § 4b.606.)

§ 4b.621 *Electrical system capacity.* The required generating capacity and the number and type of power sources shall be determined by an electrical load analysis and shall comply with § 4b.606 (c).

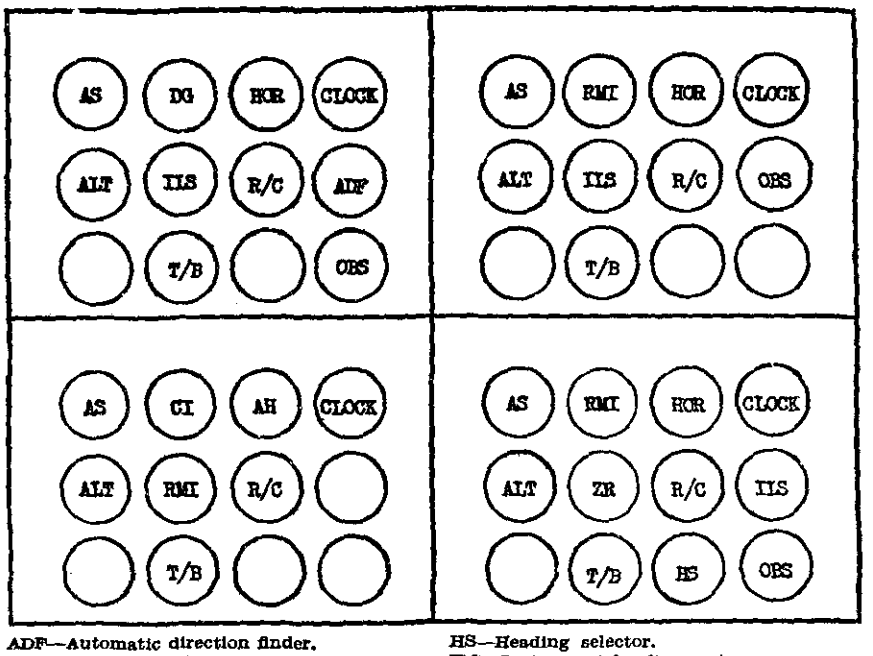

ADF—Automatic direction finder.
AH—Approach horizon.
ALT—Altimeter.
AS—Air speed.
CI—Course indicator.
DG—Direction gyro.
HOR—Artificial horizon (bank and pitch).
HS—Heading selector.
ILS—Instrument landing system.
OBS—Omni-bearing selector.
R/C—Rate of climb.
RMI—Radio magnetic indicator.
T/B—Turn and bank.
ZR—Zero reader.

FIGURE 4b-23—BASIC FLIGHT INSTRUMENT PANEL ARRANGEMENT.

§ 4b.622 *Generating system.* (a) The generating system shall be considered to include electrical power sources, main power busses, transmission cables, and associated control, regulation, and protective devices.

(b) The generating system shall be so designed that the power sources function properly both when connected in combination and independently, and the failure or malfunctioning of any power source cannot create a hazard or impair the ability of the remaining sources to supply essential loads.

(c) Means accessible in flight to appropriate crew members shall be provided for the individual and collective disconnection of electrical power sources from the main bus.

(d) Means shall be provided to indicate to appropriate crew members those generating system quantities which are essential for the safe operation of the system.

NOTE: The voltage and current supplied by each generator are quantities considered essential.

§ 4b.623 *Distribution system.* (a) The distribution system shall be considered to include all distribution busses, their associated feeders, and control and protective devices.

(b) Individual distribution systems shall be designed to insure that essential load circuits can be supplied in the event of reasonably probable faults or open circuits.

(c) Where two independent sources of electrical power for particular equipment or systems are required by the Civil Air Regulations, their electrical energy supply shall be assured.

NOTE: Various means may be used to assure a supply, such as duplicate electrical equipment, throw-over switching, and multichannel or loop circuits separately routed.

§ 4b.624 *Electrical protection.* (a) Automatic protective devices shall be provided to minimize distress to the electrical system and hazard to the airplane in the event of wiring faults or serious malfunctioning of the system or connected equipment.

(b) In the generating system the protective and control devices shall be such as to de-energize and disconnect faulty power sources and power transmission equipment from their associated busses with sufficient rapidity to provide protection against hazardous overvoltage and other malfunctioning.

(c) All resettable type circuit protective devices shall be so designed that, when an overload or circuit fault exists, they will open the circuit irrespective of the position of the operating control.

(d) Protective devices or their controls used in essential load circuits shall be accessible for resetting in flight.

(e) Circuits for essential loads shall have individual circuit protection.

NOTE: This provision does not necessarily require individual protection for each circuit in an essential load system (e. g., each position light in the system).

(f) If fuses are used, there shall be provided spare fuses for use in flight equal to at least 50 percent of the number of fuses of each rating required for complete circuit protection.

§ 4b.625 *Electrical equipment and installation.* (a) In showing compliance with § 4b.606 (a) and (b) with respect to the electrical system, equipment, and installation, consideration shall be given to critical environmental conditions.

NOTE: Critical environmental conditions may include temperature, pressure, humidity, ventilation, position, acceleration, vibration, and presence of detrimental substances.

(b) All electrical equipment, controls, and wiring shall be so installed that operation of any one unit or system of units will not affect adversely the simultaneous operation of any other electrical unit or system of units essential to the safe operation of the airplane.

(c) Cables shall be grouped, routed, and spaced so that damage to essential circuits will be minimized in the event of faults in heavy current-carrying cables.

(d) Batteries and their installations shall provide for ventilation, drainage of fluids, venting of gases, and protection of other parts of the airplane from corrosive battery fluids.

§ 4b.626 *Electrical system fire and smoke protection.* The design and installation of all components of the electrical system shall be in compliance with pertinent fire and smoke protection provisions of §§ 4b.371(c), 4b.385, and 4b.490. In addition, all electrical cables, terminals, and equipment which are necessary in emergency procedures and which are located in designated fire zones shall be fire-resistant.

§ 4b.627 *Electrical system tests and analyses.* It shall be demonstrated by tests and analyses that the electrical system functions properly and without electrical or thermal distress.

LIGHTS

§ 4b.630 *Instrument lights.* (a) Instrument lights shall provide sufficient illumination to make all instruments, switches, etc., easily readable.

(b) Instrument lights shall be so installed that their direct rays are shielded from the pilot's eyes and so that no objectionable reflections are visible to him.

(c) A means of controlling the intensity of illumination shall be provided, unless it is shown that non-dimmed instrument lights are satisfactory under all expected conditions of flight.

§ 4b.631 *Landing lights.* (a) Landing lights shall be of an approved type.

(b) Landing lights shall be installed so that there is no objectionable glare visible to the pilot and so that the pilot is not adversely affected by halation.

(c) Landing lights shall be installed in a location where they provide the necessary illumination for night landing.

(d) A switch for each light shall be provided, except that where multiple lights are installed at one location a single switch for the multiple lights shall be acceptable.

§ 4b.632 *Position light system installation*—(a) *General.* The provisions of §§ 4b.632 through 4b.635 shall be applicable to the position light system as a whole. The position light system shall include the items specified in paragraphs (b) through (f) of this section.

(b) *Forward position lights.* Forward position lights shall consist of a red and a green light spaced laterally as far apart as practicable and installed forward on an airplane in such a location that, with the airplane in normal flying position, the red light is displayed on the left side and the green light is displayed on the right side. The individual lights shall be of an approved type.

(c) *Rear position lights.* Rear position lights shall consist of a red and a white light mounted on the airplane as far aft as practicable and located in close proximity to each other. The individual lights shall be of an approved type.

(d) *Fuselage lights.* Fuselage lights shall consist of two white lights installed approximately in line with the forward position lights. One of these lights shall be mounted on the top of the fuselage, the other on the bottom. In the case of seaplanes, the location of the bottom fuselage light shall be subject to specific approval. The individual lights shall be of an approved type.

(e) *Flasher.* A position light flasher of an approved type shall be installed and shall comply with subparagraphs (1) through (3) of this paragraph.

(1) The forward position lights and the fuselage lights shall flash simultaneously at a rate of not less than 65 and not more than 85 flashes per minute.

(2) The rear position lights shall be energized alternately, such that the red light flashes during one flash of the forward position lights and the fuselage lights, and the white light flashes during the next flash of the forward position lights and the fuselage lights.

(3) A switch shall be provided in the system to disconnect the flasher from the circuit so that continuous light can be supplied by the forward position lights and the white rear position light with the remaining lights unenergized.

(f) *Light covers and color filters.* Light covers or color filters used shall be of noncombustible material and shall be constructed so that they will not change color or shape or suffer any appreciable loss of light transmission during normal use.

§ 4b.633 *Position light system dihedral angles.* The forward and rear position lights as installed on the airplane shall show unbroken light within dihedral angles specified in paragraphs (a) through (c) of this section.

(a) Dihedral angle L (left) shall be considered formed by two intersecting vertical planes, one parallel to the longitudinal axis of the airplane and the other at 110° to the left of the first, when looking forward along the longitudinal axis.

(b) Dihedral angle R (right) shall be considered formed by two intersecting vertical planes, one parallel to the longitudinal axis of the airplane and the other at 110° to the right of the first, when looking forward along the longitudinal axis.

(c) Dihedral angle A (aft) shall be considered formed by two intersecting vertical planes making angles of 70° to the right and 70° to the left, respectively, looking aft along the longitudinal axis, to a vertical plane passing through the longitudinal axis.

§ 4b.634 *Position light distribution and intensities*—(a) *General.* The intensities prescribed in this section are those to be provided by new equipment with all light covers and color filters in place. Intensities shall be determined with the light source operating at a steady value equal to the average luminous output of the light source at the normal operating voltage of the airplane. The light distribution and intensities of position lights shall comply with the provisions of paragraphs (b) and (c) of this section.

(b) *Forward and rear position lights.* The light distribution and intensities of forward and rear position lights shall be expressed in terms of minimum intensities in the horizontal plane, minimum intensities in any vertical plane, and maximum intensities in overlappng beams, within dihedral angles L, R, and A, and shall comply with the provisions of subparagraphs (1) through (3) of this paragraph.

(1) *Intensities in horizontal plane.* The intensities in the horizontal plane shall not be less than the values given in figure 4b–18. (The horizontal plane is the plane containing the longitudinal axis of the airplane and is perpendicular to the plane of symmetry of the airplane.)

(2) *Intensities above and below horizontal.* The intensities in any vertical plane shall not be less than the appropriate value given in figure 4b–19, where I is the minimum intensity prescribed in figure 4b–18 for the corresponding angles in the horizontal plane. (Vertical planes are planes perpendicular to the horizontal plane.)

(3) *Overlaps between adjacent signals.* The intensities in overlaps between adjacent signals shall not exceed the values given in figure 4b–20.

(c) *Fuselage lights.* The illuminating intensity of the top and the bottom fuselage lights individually shall be equivalent to that which would be furnished by a 32-candlepower lamp installed in a reflector of high reflective properties. The lights shall have a clear cover and the light distribution shall be reasonably uniform throughout approximately a hemisphere.

Dihedral angle (light involved)	Angle from right or left of longitudinal axis, measured from dead ahead	Intensity (candles)
L and *R* (forward red and green).	0° to 10°	40
	10° to 20°	30
	20° to 110°	5
A (Rear white)	110° to 180°	20
A (Rear red)	110° to 180°	4

FIGURE 4b–18—MINIMUM INTENSITIES IN THE HORIZONTAL PLANE OF FORWARD AND REAR POSITION LIGHTS

Angle above or below horizontal	Intensity
0°	1.00 I.
0° to 5°	.90 I.
5° to 10°	.80 I.
10° to 15°	.70 I.
15° to 20°	.50 I.
20° to 30°	.30 I.
30° to 40°	.10 I.
40° to 90°	At least 2 candles.

FIGURE 4b–19—MINIMUM INTENSITIES IN ANY VERTICAL PLANE OF FORWARD AND REAR POSITION LIGHTS

§ 4b.635 *Position light color specifications.* The colors of the position lights shall have the International Commission on Illumination chromaticity coordinates as set forth in paragraphs (a) through (c) of this section.

(a) *Aviation red.*

y is not greater than 0.335,
z is not greater than 0.002;

(b) *Aviation green.*

x is not greater than $0.440-0.320y$,
x is not greater than $y-0.170$,
y is not less than $0.390-0.170x$;

(c) *Aviation white.*

x is not less than 0.350.
x is not greater than 0.540,
$y-y_0$ is not numerically greater than 0.01, y_0 being the y coordinate of the Planckian radiator for which $x_j=x$.

CROSS REFERENCE: For Special Civil Air Regulation SR–390, modifying regulations with respect to the position light system, see Note 2 to this part, *supra.*

Overlaps	Maximum intensity	
	Area A (candles)	Area B (candles)
Green in dihedral angle *L*	10	1
Red in dihedral angle *R*	10	1
Green in dihedral angle *A*	5	1
Red in dihedral angle *A*	5	1
Rear white or rear red in dihedral angle *L*	5	1
Rear white or rear red in dihedral angle *R*	5	1

NOTE. Area A represents the overlap in any plane bounded by two straight lines forming angles of 10° cos θ and 20° cos θ to the common boundary of the dihedral angles considered. Area B represents the overlap in any plane beyond 20° cos θ. θ is the angle of the plane to the horizontal plane.

FIGURE 4b–20—MAXIMUM INTENSITIES IN OVERLAPPING BEAMS OF FORWARD AND REAR POSITION LIGHTS

§ 4b.636 *Riding light.* (a) When a riding (anchor) light is required for a seaplane, flying boat, or amphibian, it shall be capable of showing a white light for at least two miles at night under clear atmospheric conditions.

(b) The riding light shall be installed to show the maximum unbroken light practicable when the airplane is moored or drifting on the water. Externally hung lights shall be acceptable.

§ 4b.637 *Anti-collision light.* If an anti-collision light is used, it shall be of the rotating beacon type installed on top of the fuselage or tail in such a location that the light would not be detrimental to the crew's vision and would not detract from the conspicuity of the position lights. The color of the anti-collision light shall be aviation red in accordance with the specifications of § 4b.635 (a). The arrangement of the anti-collision light, i. e., number of light sources, beam width, speed of rotation, etc., shall be such as to give an effective flash frequency of not less than 40 and not more than 100 cycles per minute, with an on-off ratio not less than 1:75. If an anti-collision light is used, it shall be permissible to install the position lights in a manner so that the forward position lights and the rear white position light are on steady while the fuselage lights and the rear red position light are not energized.

NOTE: An on-off ratio of not less than 1:75 is equivalent to a total angular light beam width of not less than approximately 5 degrees.

SAFETY EQUIPMENT

§ 4b.640 *Ice protection.* When an ice protection system is installed, it shall be of an approved type. If pneumatic boots are used, at least two independent sources of power and a positive means for the deflation of the boots shall be provided.

§ 4b.641 *Hand fire extinguishers.* (See §§ 4b.381, 4b.382, and 4b.383.)

[Amdt. 4b–6, 17 F. R. 1099, Feb. 5, 1952]

§ 4b.642 *Flare installation.* (a) Parachute flares shall be releasable from the pilot compartment and installed to minimize the danger of accidental discharge.

(b) It shall be demonstrated in flight that the flare installation is such that ejection can be accomplished without hazard to the airplane and its occupants.

(c) If recoil loads are involved in the ejection of the flares, the structure of the airplane shall withstand such loads.

§ 4b.643 *Safety belts.* Safety belts shall be of an approved type. In no case shall the rated strength of the safety belt be less than that corresponding with the ultimate load factors specified in § 4b.260 (a), taking due account of the dimensional characteristics of the safety belt installation for the specific seat or berth arrangement. Safety belts shall be attached so that no part of the anchorage will fail at a load lower than that corresponding with the ultimate load factors specified in § 4b.260 (a).

§ 4b.644 *Safety belt signal.* When means are provided to indicate to the passengers when seat belts should be fastened, the device shall be so installed that it can be operated from the seat of either pilot or copilot.

§ 4b.645 *Ditching equipment.* When the airplane is certificated for ditching in accordance with § 4b.361, and when required by the operating rules for the particular route to be flown, the ditching equipment shall be as prescribed in paragraphs (a) through (d) of this section.

(a) *Life rafts.* Life rafts shall be of an approved type. Unless excess rafts of sufficient capacity are provided, the buoyancy and seating capacity beyond the rated capacity of the rafts shall be such as to accommodate all occupants of the airplane in the event of a loss of one life raft of the largest rated capacity on board. Each life raft shall be equipped with a trailing line and with a static line, the latter designed to hold the raft near the airplane but to release it in case the airplane becomes totally submerged. Each raft shall contain obvious markings of instruction on the operation of the raft.

(b) *Life raft equipment.* Approved equipment intended for survival shall be attached to each life raft and marked for identification and method of operation.

NOTE: The extent and type of survival equipment will depend upon the route over which the airplane is operated.

(c) *Long-range signalling device.* An approved long-range signalling device

shall be provided for use in one of the life rafts.

(d) *Life preservers.* Life preservers shall be of an approved type. They shall be reversible and shall contain obvious markings of instruction on their use.

§ 4b.646 *Stowage of safety equipment.* Special stowage provisions shall be made for all prescribed safety equipment to be used in emergencies. The stowage provision shall be such that the equipment is directly accessible and its location is obvious. All safety equipment shall be protected against inadvertent damage. The stowage provisions shall be marked conspicuously to identify the contents and to facilitate removal of the equipment. In addition, the following shall specifically apply.

(a) *Emergency exit means.* The stowage provisions for the emergency exit means required by § 4b.362 (e) (7) shall be located at the exits which they are intended to serve.

(b) *Life rafts.* The provisions for the stowage of life rafts required by § 4b.645 (a) shall accommodate a sufficient number of rafts for the maximum number of occupants for which the airplane is certificated for ditching. Stowage shall be near exits through which the rafts can be launched during an unplanned ditching. Rafts automatically or remotely released on the outside of the airplane shall be attached to the airplane by means of the static line prescribed in § 4b.645 (a).

(c) *Long-range signalling device.* The stowage provisions for the long-range signalling device required by § 4b.645 (c) shall be located near an exit to be available during an unplanned ditching.

(d) *Life preservers.* The provisions for the stowage of life preservers required by § 4b.645 (d) shall accommodate one life preserver for each occupant for which the airplane is certificated for ditching. They shall be located so that a life preserver is within easy reach of each occupant while seated.

MISCELLANEOUS EQUIPMENT

§ 4b.650 *Radio and electronic equipment.* (a) In showing compliance with § 4b.608 (a) and (b) with respect to radio and electronic equipment and their installations, consideration shall be given to critical environmental conditions.

NOTE: Critical environmental conditions may include temperature, pressure, humidity, ventilation, position, acceleration, vibration, and presence of detrimental substances.

(b) Radio and electronic equipment shall be supplied with power in accordance with the provisions of § 4b.623 (c).

(c) All radio and electronic equipment, controls, and wiring shall be so installed that operation of any one unit or system of units will not affect adversely the simultaneous operation of any other radio or electronic unit or system of units required by the regulations in this subchapter.

§ 4b.651 *Oxygen equipment and supply.* When required by the operating rules of the regulations in this subpart, the supplemental and protective breathing equipment and its installation shall meet the following requirements.

(a) *General.* The oxygen system installed shall be free from hazards in itself, in its method of operation, and in its effect on other components of the airplane. Means shall be provided to enable the crew to determine the quantity of oxygen available in each source of supply.

(b) *Required minimum mass flow of supplemental oxygen.* The minimum mass flow of supplemental oxygen required per person at various cabin pressure altitudes shall be at least that indicated on figure 4b-21.

(c) *Equipment standards for distribution system.* Where oxygen is to be supplied to both crew and passengers, the distribution system shall be designed to provide either:

(1) A source of supply for the flight crew on duty and a separate source for the passengers and other crew members, or

(2) A common source of supply with means provided so that the minimum supply required by the flight crew on duty can be separately reserved.

(d) *Equipment standards for dispensing units.* An individual dispensing unit shall be provided for each crew member and passenger for whom supplemental oxygen is required to be furnished. All units shall be designed to cover the nose, and at least 25 percent of the units required to be furnished shall, in addition, cover the mouth. (For crew masks to be used for protective breathing purposes see paragraph (h) of this section.)

(e) *Means for determining use of oxygen.* Means shall be provided to enable the crew to determine whether oxygen is being delivered to each user.

(f) *Fire protection.* (1) Oxygen equipment and lines shall not be located in any designated fire zone.

(2) Oxygen equipment and lines shall be protected from heat which may be generated in or escape from any designated fire zone.

(3) Oxygen equipment and lines shall be so installed that escaping oxygen cannot cause ignition of accumulations of grease, fluids, or vapors which are likely to be present in normal operation or as a result of failure or malfunctioning of any system.

(g) *Protection from rupture.* Oxygen pressure tanks and lines between tanks and the shutoff means shall be protected from the effects of unsafe temperatures, and shall be so located in the airplane as to minimize the possibility and the hazards of rupture in a crash landing.

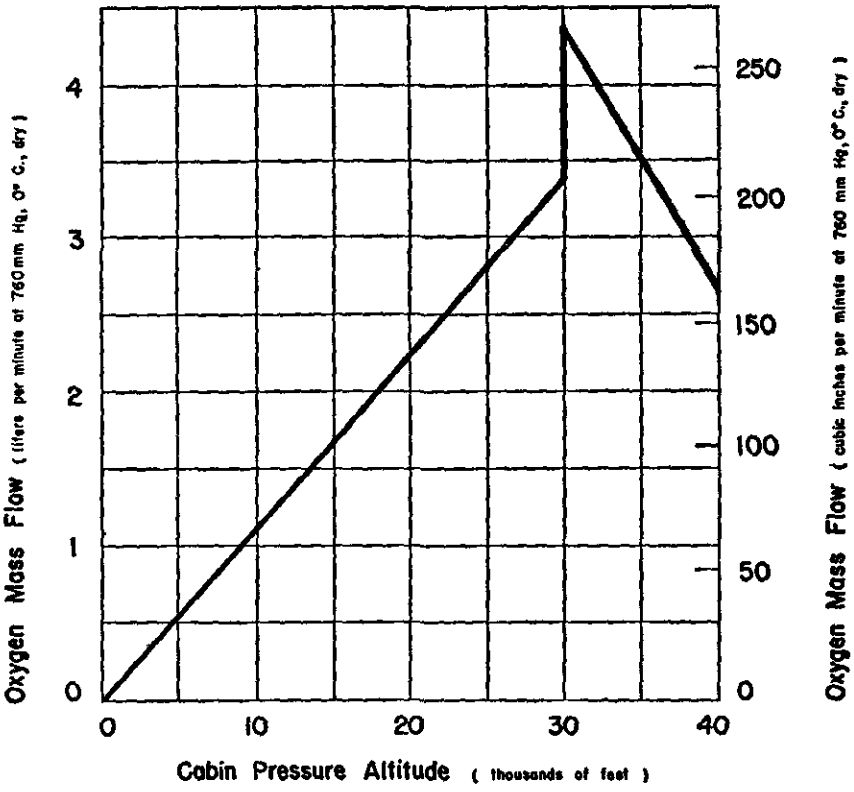

NOTE: 1. Data based on:
a. System 100% efficient.
b. Respiratory minute volume equals 15 liters (915 cubic inches) per minute.
c. 100% oxygen above 30,000 feet.

2. For diluter-demand regulators use flow characteristics supplied by manufacturer to calculate required supply. Such flows must not be less than those indicated on this graph at delivery rate of 15 liters per minute.

FIGURE 4b-21.—Minimum flow of oxygen for operation at various altitudes.

FAA TECHNICAL LIBRARY
FOB 10-A

(h) *Protective breathing system.* When protective breathing equipment is required by the Civil Air Regulations, it shall be designed to protect the flight crew from the effects of smoke, carbon dioxide, and other harmful gases while on flight deck duty and while combating fires in cargo compartments (see § 4b.380 (c)). The protective breathing equipment and the necessary supply of oxygen shall be in accordance with the following provisions.

(1) The protective breathing equipment shall include masks covering the eyes, nose, and mouth, or only the nose and mouth where accessory equipment is provided to protect the eyes.

(2) A supply of protective oxygen per crew member shall be of 15-minute duration at a pressure altitude of 8,000 feet and a respiratory minute volume of 30 liters per minute BTPD.

NOTE: When a demand type oxygen system is employed, a supply of 300 liters of free oxygen at 70° F. and 760 mm Hg. pressure is considered to be of 15-minute duration at the prescribed altitude and minute volume. When a continuous flow protective breathing system is used, including a mask with a standard rebreather bag, a flow rate of 60 liters per minute at 8,000 feet (45 liters per minute at sea level) and a supply of 600 liters of free oxygen at 70° F. and 760 mm Hg. pressure is considered to be of 15-minute duration at prescribed altitude and minute volume. (BTPD refers to body temperature conditions, i. e., 37° C., at ambient pressure, dry.)

§ 4b.652 *Engine-driven accessories.* Engine-driven accessories essential to safe operation of the airplane shall be so distributed among two or more engines that the failure of any one engine will not impair the safe operation of the airplane.

§ 4b.653 *Hydraulic systems; strength*—(a) *Structural loads.* All elements of the hydraulic system shall be designed to withstand, without detrimental permanent deformation, all structural loads which may be imposed simultaneously with the maximum hydraulic loads occurring in operation.

(b) *Proof pressure tests.* All elements of the hydraulic system shall be tested to a proof pressure of 1.5 times the maximum pressure to which the part will be subjected in normal operation. In such test no part of the hydraulic system shall fail, malfunction, or suffer detrimental deformation.

(c) *Burst pressure strength.* Individual hydraulic system elements shall be designed to withstand pressures which are sufficiently increased over the pressures prescribed in paragraph (b) of this section to safeguard against rupture under service conditions.

NOTE: The following pressures, in terms of percentage of maximum operating pressure for the particular element, in most instances are sufficient to insure against rupture in service: 250 percent in units under oil pressure, 400 percent in units containing air and oil under pressure and in lines, hoses, and fittings, 300 percent in units of system subjected to back pressure.

§ 4b.654 *Hydraulic systems; design*—(a) *Pressure indication.* A means shall be provided to indicate the pressure in each main hydraulic power system.

(b) *Pressure limiting provisions.* Provision shall be made to assure that pressures in any part of the system will not exceed a safe limit above the maximum operating pressure of the system and to insure against excessive pressures resulting from fluid volumetric changes in all lines which are likely to remain closed long enough for such changes to take place. In addition, consideration shall be given to the possible occurrence of detrimental transient (surge) pressures during operation.

(c) *Installation.* Hydraulic lines, fittings, and components shall be installed and supported to prevent excessive vibration and to withstand inertia loads. All elements of the installation shall be protected from abrasion, corrosion, and mechanical damage.

(d) *Connections.* Flexible hose, or other means of providing flexibility, shall be used to connect points in a hydraulic fluid line between which there is relative motion or differential vibration.

§ 4b.655 *Hydraulic system fire protection.* When flammable type hydraulic fluid is used, the hydraulic system shall comply with the provisions of §§ 4b.385, 4b.481, 4b.482, and 4b.483.

§ 4b.658 *Vacuum systems.* (a) Means, in addition to the normal pressure relief, shall be provided to relieve automatically the pressure in the discharge lines from the vacuum pump, if the delivery temperature of the air reaches an unsafe value.

(b) Vacuum system lines and fittings on the discharge side of the pump which might contain flammable vapors or fluids shall comply with § 4b.483 if they are located in a designated fire zone. Other vacuum system components located in designated fire zones shall be fire-resistant.

SUBPART G—OPERATING LIMITATIONS AND INFORMATION

GENERAL

§ 4b.700 *Scope.* (a) The operating limitations listed in §§ 4b.710 through 4b.723 shall be established as prescribed in this part.

(b) The operating limitations, together with any other information concerning the airplane found necessary for safety during operation, shall be included in the Airplane Flight Manual (§ 4b.740), shall be expressed as markings and placards (§ 4b.730), and shall be made available by such other means as will convey the information to the crew members.

OPERATING LIMITATIONS

§ 4b.710 *Air-speed limitations; general.* When air-speed limitations are a function of weight, weight distribution, altitude, or Mach number, the values corresponding with all critical combinations of these values shall be established.

§ 4b.711 *Never-exceed speed V_{NE}.* (a) To allow for possible variations in the airplane characteristics and to minimize the possibility of inadvertently exceeding safe speeds, the never-exceed speed V_{NE} shall be a speed established sufficiently below the lesser of:

(1) The design dive speed V_D chosen in accordance with § 4b.210 (b) (5), or

(2) The maximum speed demonstrated in flight in accordance with § 4b.190.

(b) In the absence of a rational investigation, the value of V_{NE} shall not exceed 0.9 times the lesser of the two speeds referred to in paragraph (a) of this section.

§ 4b.712 *Normal operating limit speed V_{NO}.* (a) The normal operating limit speed V_{NO} shall be established not to exceed the design cruising speed V_C chosen in accordance with § 4b.210 (b) (4) and sufficiently below the never-exceed speed V_{NE} to make it unlikely that V_{NE} would be exceeded in a moderate upset occurring at V_{NO}.

(b) In the absence of a rational investigation, the value of V_{NO} shall not exceed 0.9 times V_{NE}.

§ 4b.713 *Maneuvering speed.* The maneuvering speed shall not exceed the design maneuvering speed V_A determined in accordance with § 4b.210 (b) (2).

§ 4b.714 *Flap extended speed V_{FE}.* (a) The flap extended speed V_{FE} shall be established not to exceed the lesser of:

(1) The design flap speed V_F chosen in accordance with § 4b.210 (b) (1), or

(2) The design speed for slipstream effects with flaps in the landing position, chosen in accordance with § 4b.221.

(b) The value of V_{FE} established in accordance with paragraph (a) of this section shall not be less than a value which provides a safe speed margin above the stall during approach and landing.

(c) It shall be acceptable to establish supplementary values of V_{FE} for other combinations of flap setting, air speed, and engine power, if the structure and the flight characteristics of the airplane have been shown to be satisfactory for such combinations.

§ 4b.715 *Landing gear operating speed V_{LO}.* The landing gear operating speed V_{LO} shall be established not to exceed a speed at which it is safe to extend or retract the landing gear as limited by design in accordance with § 4b.334 or by flight characteristics.

§ 4b.716 *Landing gear extended speed V_{LE}.* The landing gear extended speed V_{LE} shall be established not to exceed a speed at which it has been shown that the airplane can be safely flown with the landing gear secured in the fully extended position, and for which the structure has been proven in accordance with § 4b.334.

§ 4b.717 *Minimum control speed V_{MC}.* (See § 4b.133.)

§ 4b.718 *Powerplant limitations.* The following powerplant limitations shall be established for the airplane. They shall not exceed the corresponding limits established as a part of the type certification of the engine and propeller installed in the airplane.

(a) *Take-off operation.* (1) Maximum rotational speed (r. p. m.),

(2) Maximum permissible manifold pressure,

(3) The time limit for use of the power which corresponds with the values established in subparagraphs (1) and (2) of this paragraph,

(4) Where the time limit established in subparagraph (3) of this paragraph exceeds two minutes, the maximum allowable cylinder head or coolant outlet, and oil temperatures,

(5) Maximum cylinder head or coolant outlet and oil temperatures, if these differ from the maximum limits for continuous operation.

(b) *Maximum continuous operation.* (1) Maximum rotational speed (r. p. m.),

(2) Maximum permissible manifold pressure,

(3) Maximum allowable cylinder head or coolant outlet, and oil temperatures.

(c) *Fuel octane rating.* The minimum octane rating of fuel required for satisfactory operation of the powerplant at the limits specified in paragraphs (a) and (b) of this section.

(d) *Cooling limitations.* The maximum sea level temperature for which satisfactory cooling has been demonstrated.

§ 4b.719 *Airplane weight, center of gravity, and weight distribution limitations.* The airplane weight, center of gravity, and weight distribution limitations shall be those prescribed in §§ 4b.101, 4b.102 and 4b.103. Where the airplane is certificated for more than one center of gravity range, the appropriate limitations with regard to weight and loading procedures shall be set forth in the Airplane Flight Manual for each separate center of gravity range.

§ 4b.720 *Minimum flight crew.* The minimum flight crew shall be established by the Administrator as that number of persons which he finds necessary for safety in the operations authorized under § 4b.721. This finding shall be based upon the work load imposed upon individual crew members with due consideration given to the accessibility and the ease of operation of all necessary controls by the appropriate crew members.

§ 4b.721 *Types of operation.* The types of operation to which the airplane is limited shall be established by the category in which it has been found eligible for certification and by the equipment installed. (See the operating rules in this subchapter.)

§ 4b.722 *Maximum operating altitude.* A maximum altitude shall be established up to which operation is permitted, as limited by flight, structural, powerplant, functional, or equipment characteristics.

§ 4b.723 *Maneuvering flight load factors.* Load factor limitations shall be established not to exceed the positive limit load factors determined from the maneuvering diagram, figure 4b–2. (See § 4b.211 (a).)

MARKINGS AND PLACARDS

§ 4b.730 *General.* (a) Markings and placards shall be displayed in conspicuous places and shall be such that they cannot be easily erased, disfigured, or obscured.

(b) *Additional information, placards,* and instrument markings having a direct and important bearing on safe operation of the airplane shall be required when unusual design, operating, or handling characteristics so warrant.

§ 4b.731 *Instrument markings; general.* (a) When markings are placed on the cover glass of the instrument, provision shall be made to maintain the correct alignment of the glass cover with the face of the dial.

(b) All arcs and lines shall be of sufficient width and so located that they are clearly visible to the pilot.

§ 4b.732 *Air-speed indicator.* The following markings shall be placed on the air-speed indicator. If speeds vary with altitude, means shall be provided to indicate the appropriate limitation to the pilot throughout the operating altitude range.

(a) A radial red line shall indicate the never-exceed speed V_{NE} (see § 4b.711).

(b) A yellow arc extending from the red line specified in paragraph (a) of this section to the upper limit of the green arc specified in paragraph (c) of this section shall indicate the caution range.

(c) A green arc with the lower limit at V_{s_1} as determined in accordance with § 4b.112 (b) with maximum take-off weight, landing gear and wing flaps retracted, and the upper limit at the normal operating limit speed V_{NO} established in accordance with § 4b.712 shall indicate the normal operating range.

(d) A white arc with the lower limit at V_{s_0} as determined in accordance with § 4b.112 (a) at the maximum landing weight, and the upper limit at the flaps-extended speed V_{FE} as established in accordance with § 4b.714 shall indicate the flap operating range.

§ 4b.733 *Magnetic direction indicator.* A placard shall be installed on or in close proximity to the magnetic direction indicator which shall comply with the following.

(a) The placard shall contain the calibration of the instrument in a level flight attitude with engine(s) operating.

(b) The placard shall state whether the calibration was made with radio receiver(s) on or off.

(c) The calibration readings shall be in terms of magnetic headings in not greater than 45° increments.

§ 4b.734 *Powerplant instruments; general.* All required powerplant instruments shall be marked as follows.

(a) The maximum and the minimum (if applicable) safe operational limits shall be marked with red radial lines.

(b) The normal operating ranges shall be marked with a green arc not extending beyond the maximum and minimum safe operational limits.

(c) The take-off and precautionary ranges shall be marked with a yellow arc.

(d) Engine or propeller speed ranges which are restricted because of excessive vibration stresses shall be marked with red arcs.

§ 4b.735 *Oil quantity indicators.* Oil quantity indicators shall be marked in sufficient increments to indicate readily and accurately the quantity of oil.

§ 4b.736 *Fuel quantity indicator.* When the unusable fuel supply for any tank exceeds 1 gallon or 5 percent of the tank capacity, whichever is the greater, a red arc shall be marked on the indicator extending from the calibrated zero reading to the lowest reading obtainable in the level flight attitude. A notation in the Airplane Flight Manual shall be made to indicate that the fuel remaining in the tank when the quantity indicator reaches zero is not usable in flight. (See § 4b.613 (b).)

§ 4b.737 *Control markings; general.* All cockpit controls, with the exception of the primary flight controls and other controls the function of which is obvious, shall be plainly marked and/or identified as to their function and method of operation. The markings shall include the following.

(a) *Aerodynamic controls.* The secondary aerodynamic controls shall be marked to comply with §§ 4b.322 and 4b.323.

(b) *Powerplant fuel controls.* (1) Controls for fuel tank selector valves shall be marked to indicate the position corresponding with each tank and with all possible cross-feed positions.

(2) When more than one fuel tank is provided, and if safe operation depends upon the use of tanks in a specific sequence, the fuel tank selector controls shall be marked adjacent to or on the control itself to indicate the order in which the tanks should be used.

(3) Controls for engine selector valves shall be marked to indicate the position corresponding with each engine.

(c) *Accessory and auxiliary controls.* (1) When a retractable landing gear is used, the visual indicator required in § 4b.334 (e) shall be marked so that the pilot can ascertain at all times when the wheels are locked in either extreme position.

(2) Emergency controls, including fuel jettisoning and fluid shutoff controls, shall be colored red and shall be marked to indicate their function and method of operation.

§ 4b.738 *Miscellaneous markings and placards*—(a) *Baggage compartments and ballast location.* Each baggage and cargo compartment as well as the ballast location shall bear a placard stating the maximum allowable weight of contents and, if applicable, any other limitation on contents found necessary due to loading requirements.

(b) *Fuel, oil, and coolant filler openings.* The following information shall be marked on or adjacent to the appropriate filler cover:

(1) The word "fuel", the minimum permissible fuel octane number for the engines installed, and the usable fuel tank capacity (see § 4b.416),

(2) The word "oil" and the oil tank capacity,

(3) The name of the proper coolant fluid and the capacity of the coolant system.

(c) *Emergency exit placards.* (See § 4b.362 (f).)

(d) *Operating limitation placard.* A placard shall be provided in front of and in clear view of the pilots stating: "This airplane must be operated in compliance with the operating limitations specified in the CAA approved Airplane Flight Manual."

(e) *Safety equipment.* (1) Safety equipment controls which the crew is expected to operate in time of emergency, such as flares, automatic life raft releases, etc., shall be readily accessible and plainly marked as to their method of operation.

(2) When fire extinguishers and signaling and other lifesaving equipment are carried in lockers, compartments, etc., these locations shall be marked accordingly.

AIRPLANE FLIGHT MANUAL

§ 4b.740 *General.* (a) An Airplane Flight Manual shall be furnished with each airplane.

(b) The portions of the manual listed in §§ 4b.741 through 4b.743 as are appropriate to the airplane shall be verified and approved and shall be segregated, identified, and clearly distinguished from portions not so approved.

(c) Additional items of information having a direct and important bearing on safe operation shall be required when unusual design, operating, or handling characteristics so warrant.

§ 4b.741 *Operating limitations*—(a) *Air-speed limitations.* The following air-speed limitations shall be included together with sufficient information to permit marking the air-speed indicator in accordance with § 4b.732:

(1) The never-exceed speed (see § 4b.711);

(2) The normal operating limit speed (see § 4b.712), together with a statement to the effect that normal flight operations should be confined to speeds below this value, and a further statement to the effect that the range of speeds between the normal operating limit speed and the never-exceed speed should be entered with caution and with due regard to the prevailing flight and atmospheric conditions;

(3) When an air-speed limitation is based upon compressibility effects, a statement to this effect, together with information as to any symptoms, the probable behavior of the airplane, and the recommended recovery procedures;

(4) The maneuvering speed (see § 4b.210 (b) (2)), together with a statement to the effect that full application of rudder and aileron controls as well as those maneuvers which involve angles of attack near the stall should be confined to speeds below this value;

(5) The flap extended speed (see § 4b.714), together with a description of the pertinent flap positions and engine powers;

(6) The landing gear operating speed (see § 4b.715), together with a statement to the effect that this is the maximum speed at which it is safe to extend or retract the landing gear;

(7) The landing gear extended speed (see § 4b.716), if greater than the landing gear operating speed, together with a statement to the effect that this is the maximum speed at which the airplane can be flown safely with the landing gear in the extended position.

(b) *Powerplant limitations.* Information shall be included to outline and to explain all powerplant limitations (see § 4b.718) and to permit marking the instruments as required by §§ 4b.734 through 4b.736.

(c) *Weight and loading distribution.* The airplane weights and center of gravity limits required by §§ 4b.101 and 4b.102 shall be included, together with the items of equipment on which the empty weight is based. Where the variety of possible loading conditions warrants, instructions shall be included to facilitate observance of the limitations.

(d) *Flight load acceleration limits.* The positive maneuvering limit load factors for which the airplane structure has been proven shall be described in terms of accelerations, together with a statement to the effect that these accelerations limit the angle of bank in turns and limit the severity of pull-up maneuvers.

(e) *Flight crew.* The number and functions of the minimum flight crew determined in accordance with § 4b.720 shall be described.

(f) *Type of operation.* The type(s) of operating(s) shall be listed for which the airplane and its equipment installations have been approved. (See § 4b.721.)

(g) *Maximum operating altitude.* The altitude established in accordance with § 4b.722 shall be included, together with an explanation of the limiting factors.

§ 4b.742 *Operating procedures*—(a) *Normal.* Information and instructions shall be included regarding peculiarities of starting and warming the engines, taxying, operation of wing flaps, landing gear, automatic pilot, etc.

(b) *One engine inoperative.* The recommended procedure shall be described to be followed in the event of engine failure, including minimum speeds, trim, operation of remaining engine(s), operation of flaps, etc.

(c) *Propeller feathering.* The recommended procedure shall be described to be followed in stopping the rotation of propellers in flight.

(d) *Emergency procedures.* Recommended emergency procedures shall be described to be followed in the event of fire, decompression, ditching, etc.

§ 4b.743 *Performance information*—(a) *Performance data.* A summary of all pertinent performance data shall be given, including the performance data necessary for the application of the operating rules of this subchapter, together with descriptions of the conditions, air speeds, etc., under which these data were determined.

(b) *Flap controls.* Instructions shall be included describing the use and adjustment of the flap controls necessary to obtain the performance referred to in paragraph (a) of this section.

(c) *Air speeds.* The indicated air speeds corresponding with those determined for take-off shall be listed together with the procedures to be followed in the event the critical engine becomes inoperative during take-off (see § 4b.742 (b)).

(d) *Miscellaneous.* An explanation shall be included of any significant or unusual flight or ground handling characteristics.

AIRPLANE IDENTIFICATION DATA

§ 4b.750 *Identification plate.* A fireproof identification plate shall be securely attached to the structure in an accessible location where it will not likely be defaced during normal service. The identification plate shall not be placed in a location where it might be expected to be destroyed or lost in the event of an accident. The identification plate shall contain the identification data required by § 1.50 of this subchapter.

§ 4b.751 *Identification marks.* The nationality and registration marks shall be permanently affixed in accordance with § 1.100 of this subchapter.

[SEAL] M. C. MULLIGAN,
Secretary.

[F. R. Doc. 53-10780; Filed, Dec. 29, 1953; 8:50 a. m.]

NOTICE

Advise the Civil Aeronautics Board, Washington 25, D. C., that you have purchased this Part of the Civil Air Regulations and that agency will supply you with copies of amendments which have been issued since this printing. Be sure to specify the number of this Part, otherwise your request cannot be filled.

DOT LIBRARY FEB 1954

DCL LIBRARY
FOB 10-1

DOT LIBRARY
FOB 10-A

DOT LIBRARY
FOB 10-A

DOT LIBRARY
FOB 10-A