4b-6

CIVIL AERONAUTICS BOARD

Washington, D. C.

[Reprinted from the FEDERAL REGISTER of February 5, 1952]

Civil Air Regulations Amendment 4b–6, Effective March 5, 1952

[Civil Air Regs., Amdt. 4b–6]

PART 4b—AIRPLANE AIRWORTHINESS; TRANSPORT CATEGORIES

MISCELLANEOUS AMENDMENTS

Adopted by the Civil Aeronautics Board at its office in Washington, D. C., on the 28th day of January 1952.

This amendment revises Subpart A of Part 4b and contains numerous substantive changes to the other subparts. The revisions to Subpart A are in rewording and rearranging so that these sections are consistent with other airworthiness parts of the Civil Air Regulations.

Of the substantive amendments, a number of changes deal with performance flight characteristics and controllability. The most prominent performance item is with respect to minimum one-engine-out en route climb. As amended, performance is based upon the number of engines installed as opposed to the old regulation which was based on the maximum weight. The old regulations which defined minimum control speed have been clarified by defining more completely the required configuration. In this connection, the condition of the propeller on the inoperative engine is specified as windmilling, except in those instances where the specific design of propeller control would make it more logical to assume a different configuration. This amendment further contains various structural changes dealing primarily with control surface and system design, flutter and vibration, transient stresses, fatigue, and water load requirements.

An amendment of considerable significance is contained herein regarding crash load factors. Specifically, the crash load factor in the forward direction is increased from 6g to 9g (§ 4b.260 (a)). In addition, the crash load factors for the design of seat and berth structural attachments and of safety belt or shoulder harness attachments to the seat, berth, or structure have been increased 33 percent in all directions.

This amendment contains several changes to Subpart D. Some of these pertain to equipment which will be approved under the Technical Standard Order system. Other minor proposed changes are for the purpose of clarification, including those pertaining to ventilation of crew and passenger compartments, protection of flammable fluids, etc.

A substantive change is made to specify a flight engineer station where the workload requires a flight engineer. The intent of this amendment is not to eliminate a jump seat location in those instances where the flight engineer could perform his duties satisfactorily without causing interference between the other members of the crew.

A new provision for the design of windshields and windows in pressurized airplanes is contained in this amendment which takes into account factors peculiar to high altitude operation.

The amendment contains provisions for fire protection of the airplane in addition to those applicable to powerplants. Specifically, the required number of hand fire extinguishers in passenger and crew compartments is prescribed and, in addition, a Class D category compartment is established. Several minor changes have been made for the protection of combustion heaters.

A number of changes have been incorporated with respect to the power-plant installation. The most significant of these is a revision of the applicability clause of Subpart E to make the provisions of that subpart appropriately applicable to turbine engine installations. Numerous amendments to the detail provisions of the powerplant installation requirements are included. These deal to a large extent with clarification, although certain of the provisions are substantive in nature, particularly with respect to engine fire protection. A revision is also made with regard to the propeller reversing controls (§ 4b.474 (c)) for the purpose of defining more clearly the intent of the regulation.

A few changes are contained in this amendment pertaining to the installation of navigational and powerplant instruments. Provisions include the requirement of a maximum allowable airspeed indicator on airplanes having air-speed limitations resulting from compressibility hazards, fuel pressure and oil pressure indicators for each engine, and a master warning device with selective switches for each engine, as well as a means (BMEP gauge or equivalent) for indicating a change in power output on engines equipped with automatic feathering.

An amendment clarifying the requirements for equipment, systems, and installations with regard to functioning and reliability is made in Subpart F. In addition, it specifies dual power supply for those installations the functioning of which is necessary to show compliance with the Civil Air Regulations.

This amendment contains a complete rewrite of the electrical provisions (§§4b 620 through 4b.628) so that they can be made applicable to new airplane designs. The intent is to provide objective requirements sufficiently flexible so as not to hamper the design of future systems.

New requirements prescribing accessibility and identification of all safety equipment carried in the airplane, oxygen equipment and supply, and provisions for protective breathing equipment are inserted in the regulations by this amendment. In addition, the requirements for hydraulic systems are clarified.

Interested persons have been afforded an opportunity to participate in the making of this amendment, and due consideration has been given to all revelant matter presented.

In consideration of the foregoing the Civil Aeronautics Board hereby amends Part 4b of the Civil Air Regulations (14 CFR Part 4b, as amended) effective March 5, 1952:

1. By amending the introductory statement of § 4b.1 to read as follows:

§ 4b.1 *Definitions.* As used in this part terms are defined as follows:

2. By amending § 4b.1 (b) (4) to read as follows:

§ 4b.1 *Definitions.** * *

(b) *General design.* * * *

(4) *Aerodynamic coefficients.* Aerodynamic coefficients are nondimensional coefficients for forces and moments. They correspond with those adopted by the U. S. National Advisory Committee for Aeronautics.

3. By substituting the word "structural" for the word "structure" in § 4b.1 (e) (10).

4. By deleting the words "chosen by the applicant" from § 4b.1 (f) (7).

5. By rescinding §§ 4b.10 through 4b.24 and substituting in lieu thereof new §§ 4b.10 through 4b.19 to read as follows:

CERTIFICATION

§ 4b.10 *Eligibility for type certificates.* An airplane shall be eligible for type certification under the provisions of this part if it complies with the airworthiness provisions hereinafter established or if the Administrator finds that the provision or provisions not complied with are compensated for by factors which provide an equivalent level of safety: *Provided,* That the Administrator finds no feature or characteristic of the air-

plane which renders it unsafe for the transport category.

§ 4b.11 *Designation of applicable regulations.* (a) The provisions of this part, together with all amendments thereto effective on the date of application for type certificate, shall be considered as incorporated in the type certificate as though set forth in full.

(b) Except as otherwise provided by the Board, or pursuant to § 1.24 of this chapter by the Administrator, any change to the type design may be accomplished, at the option of the holder of the type certificate, either in accordance with the provisions incorporated by reference in the certificate pursuant to paragraph (a) of this section, or in accordance with the provisions in effect at the time the application for change is filed.

(c) The Administrator, upon approval of a change to a type design, shall designate and keep a record of the provisions of the Civil Air Regulations with which compliance was demonstrated.

§ 4b.12 *Amendment of part.* Unless otherwise established by the Board, an amendment of this part shall be effective with respect to airplanes for which applications for type certificates are filed after the effective date of the amendment.

§ 4b.13 *Type certificate.* (a) An applicant shall be issued a type certificate when he demonstrates the eligibility of the airplane by complying with the requirements of this part in addition to the applicable requirements in Part 1 of this chapter.

(b) The type certificate shall be deemed to include the type design (see § 4b.14 (b)), the operating limitations for the airplane (see § 4b.700), and any other conditions or limitations prescribed by the Civil Air Regulations. (See also § 4b.11 (a).)

§ 4b.14 *Data required.* (a) The applicant for a type certificate shall submit to the Administrator such descriptive data, test reports, and computations as are necessary to demonstrate that the airplane complies with the requirements of this part.

(b) The descriptive data required in paragraph (a) of this section shall be known as the type design and shall consist of such drawings and specifications as are necessary to disclose the configuration of the airplane and all the design features covered in the requirements of this part, such information on dimensions, materials, and processes as is necessary to define the structural strength of the airplane, and such other data as are necessary to permit by comparison the determination of the airworthiness of subsequent airplanes of the same type.

§ 4b.15 *Inspections and tests.* Inspections and tests shall include all those found necessary by the Administrator to insure that the airplane complies with the applicable airworthiness requirements and conforms to the following:

(a) All materials and products are in accordance with the specifications in the type design,

(b) All parts of the airplane are constructed in accordance with the drawings in the type design,

(c) All manufacturing processes, construction, and assembly are such that the design strength and safety contemplated by the type design will be realized in service.

§ 4b.16 *Flight tests.* After proof of compliance with the structural requirements contained in this part, and upon completion of all necessary inspections and testing on the ground, and proof of the conformity of the airplane with the type design, and upon receipt from the applicant of a report of flight tests performed by him, the following shall be conducted:

(a) Such official flight tests as the Administrator finds necessary to determine compliance with the requirements of this part.

(b) After the conclusion of flight tests specified in paragraph (a) of this section, such additional flight tests as the Administrator finds necessary to ascertain whether there is reasonable assurance that the airplane, its components, and equipment are reliable and function properly. The extent of such additional flight tests shall depend upon the complexity of the airplane, the number and nature of new design features, and the record of previous tests and experience for the particular airplane type, its components, and equipment. If practicable, these flight tests shall be conducted on the same airplane used in the flight tests specified in paragraph (a) of this section.

§ 4b.17 *Airworthiness, experimental, and production certificates.* (For requirements with regard to these certificates see Part 1 of this chapter.)

§ 4b.18 *Approval of materials, parts, processes, and appliances.* (a) Materials, parts, processes, and appliances shall be approved upon a basis and in a manner found necessary by the Administrator to implement the pertinent provisions of the Civil Air Regulations. The Administrator may adopt and publish such specifications as he finds necessary to administer this regulation, and shall incorporate therein such portions of the aviation industry, Federal, and military specifications respecting such materials, parts, processes, and appliances as he finds appropriate.

NOTE: The provisions of this paragraph are intended to allow approval of materials, parts, processes, and appliances under the system of Technical Standard Orders, or in conjunction with type certification procedures for an airplane, or by any other form of approval by the Administrator.

(b) Any material, part, process, or appliance shall be deemed to have met the requirements for approval when it meets the pertinent specifications adopted by the Administrator, and the manufacturer so certifies in a manner prescribed by the Administrator.

§ 4b.19 *Changes in type design.* (For requirements with regard to changes in type design see Part 1 of this chapter.)

6. By amending the first sentence of § 4b.102 to read as follows: "Center of gravity limits shall be established as the most forward position permissible and the most aft position permissible for each practicably separable operating condition in accordance with § 4b.101 (b)."

7. By amending § 4b.110 by designating the present text of this section as paragraph (a) and by adding a new paragraph (b) to read as follows:

§ 4b.110 *General.* * * *

(b) Each set of performance data required for a particular flight condition shall be determined with the powerplant accessories absorbing the normal amount of power appropriate to that flight condition. (See also § 4b.117.)

8. By amending the introductory statement of § 4b.120 (c) to read as follows:

§ 4b.120 *One-engine-inoperative climb.* * * *

(c) *Flaps in en route position.* The steady rate of climb in feet per minute at any altitude at which the airplane is expected to operate, at any weight within the range of weights to be specified in the airworthiness certificate, shall be determined and shall, at a standard altitude of 5,000 feet and at the maximum take-off weight, be at least

$$\left(0.06 - \frac{0.08}{N}\right)V_{s_0}^2,$$

where N is the number of engines installed, with:

9. By amending § 4b.131 (b) (3) by deleting the words "maximum continuous" therefrom and inserting in lieu thereof the words "take-off".

10. By amending § 4b.131 (c) to read as follows:

§ 4b.131 *Longitudinal control.* * * *

(c) It shall be possible without the use of exceptional piloting skill to prevent loss of altitude when wing flap retraction from any position is initiated during steady straight level flight at a speed equal to 1.1 V_s, with simultaneous application of not more than maximum continuous power, with the landing gear extended, and with the airplane weight equal to the maximum sea level landing weight. (See also § 4b.323.)

11. By adding subpargraphs (5) through (9) to § 4b.133 (a) to read as follows:

§ 4b.133 *Minimum control speed, V_{MC}.* * * *

(a) * * *

(5) Cowl flaps in the position normally used during take-off,

(6) Maximum sea level take-off weight, or such lesser weight as may be necessary to demonstrate V_{MC},

(7) The airplane trimmed for take-off,

(8) The propeller of the inoperative engine windmilling, except that a different position of the propeller shall be acceptable if the specific design of the propeller control makes it more logical to assume the different position.

(9) The airplane airborne and the ground effect negligible.

12. By amending § 4b.143 to read as follows:

§ 4b.143 *Longitudinal, directional, and lateral trim.* (a) The airplane shall maintain longitudinal, directional, and lateral trim at a speed equal to 1.4 V_{s_1} during climbing flight with the critical engine inoperative, with

(1) The remaining engine(s) operating at maximum continuous power,

(2) Landing gear retracted.

(3) Wing flaps retracted.

(b) In demonstrating compliance with the lateral trim requirement of paragraph (a) of this section, the angle of bank of the airplane shall not be in excess of 5 degrees.

13. By amending the first sentence of § 4b.157 (b) to read as follows: "The static lateral stability, as shown by the tendency to raise the low wing in a sideslip with the aileron controls free and with all landing gear and flap positions and symmetrical power conditions, shall:"

14. By amending §§ 4b.180, 4b.181, and 4b.182 to read as follows:

§ 4b.180 *Water conditions.* The most adverse water conditions in which the seaplane has been demonstrated to be safe for take-off, taxying, and alighting shall be established.

§ 4b.181 *Wind conditions.* The following wind velocities shall be established:

(a) A lateral component of wind velocity not less than 0.2 V_{s_0} at and below which it has been demonstrated that the seaplane is safe for taking off and alighting under all water conditions in which the seaplane is likely to be operated;

(b) A wind velocity at and below which it has been demonstrated that the seaplane is safe in taxying in all directions, under all water conditions in which the seaplane is likely to be operated.

§ 4b.182 *Control and stability on the water.* (a) In taking off, taxying, and alighting, the seaplane shall not exhibit the following:

(1) Any dangerously uncontrollable porpoising, bouncing, or swinging tendency;

(2) Any submerging of auxiliary floats or sponsons, any immersion of wing tips, propeller blades, or other parts of the seaplane which are not designed to withstand the resulting water loads;

(3) Any spray forming which would impair the pilot's view, cause damage to the seaplane, or result in ingress of an undue quantity of water.

(b) Compliance with paragraph (a) of this section shall be shown under the following conditions:

(1) All water conditions from smooth to the most adverse condition established in accordance with § 4b.180;

(2) All wind and cross-wind velocities, water currents, and associated waves and swells which the seaplane is likely to encounter in operation on water;

(3) All speeds at which the seaplane is likely to be operated on the water;

(4) Sudden failure of the critical engine, occurring at any time while the airplane is operated on water;

(5) All seaplane weights and center of gravity positions within the range of loading conditions for which certification is sought, relevant to each condition of operation.

(c) In the water conditions of paragraph (b) of this section and the corresponding wind conditions the seaplane shall be able to drift for 5 minutes with engines inoperative, aided if necessary by a sea anchor.

15. By amending § 4b.201 by adding paragraph (d) to read as follows:

§ 4b.201 *Strength and deformation.* * * *

(d) Where structural flexibility is such that any rate of load application likely to occur in the operating conditions might produce transient stresses appreciably higher than those corresponding with static loads, the effects of such rate of application shall be considered.

16. By adding a sentence following the first sentence of § 4b.211 (a) to read as follows: "Pitching velocities appropriate to the corresponding pull-up and steady turn maneuvers shall be taken into account."

17. By amending § 4b.212 (c) to read as follows:

§ 4b.212 *Effect of high lift devices.* * * *

(c) In designing flaps and supporting structure on tractor type airplanes, slipstream effects shall be taken into account as specified in § 4b.221. For other than tractor type airplanes a head-on gust of 25 feet per second with no alleviations acting along the flight path shall be considered.

18. By amending the first sentence of § 4b.214 (a) by deleting the words "at least" and inserting in lieu thereof the words "zero and of".

19. By amending § 4b.215 by deleting the word "yawing" from the first sentence thereof.

20. By amending § 4b.215 (a) by deleting therefrom the words "the vertical tail loads resulting from".

21. By amending § 4b.220 by adding a clause in the first sentence thereof following the reference "4b.215" to read "and the ground gust conditions prescribed in § 4b.226,".

22. By amending § 4b.220 (b) and (c) to read as follows:

§ 4b.220 *Control surface loads; general.* * * *

(b) *Effect of trim tabs.* The effect of trim tabs on the main control surface design conditions need be taken into account only in cases where the surface loads are limited by pilot effort in accordance with the provisions of paragraph (a) of this section. In such cases the trim tabs shall be considered to be deflected in the direction which would assist the pilot, and the deflection shall be as follows:

(1) For elevator trim tabs the deflections shall be those required to trim the airplane at any point within the positive portion of the V-n diagram (fig. 4b–2), except as limited by the stops.

(2) For aileron and rudder trim tabs the deflections shall be those required to trim the airplane in the critical unsymmetrical power and loading conditions, with appropriate allowance for rigging tolerances.

(c) *Unsymmetrical loads.* Horizontal tail surfaces and the supporting structure shall be designed for unsymmetrical loads arising from yawing and slipstream effects in combination with the prescribed flight conditions.

NOTE: In the absence of more rational data, the following assumptions may be made for airplanes which are conventional in regard to location of propellers, wings, tail surfaces, and fuselage shape: 100 percent of the maximum loading from the symmetrical flight conditions acting on the surface on one side of the plane of symmetry and 80 percent of this loading on the other side. Where the design is not conventional (e. g. where the horizontal tail surfaces have appreciable dihedral or are supported by the vertical tail surfaces), the surfaces and supporting structures may be designed for combined vertical and horizontal surface loads resulting from the prescribed maneuvers.

23. By adding a new paragraph (e) to § 4b.220 to read as follows:

§ 4b.220 *Control surface loads, general.* * * *

(e) *Loads parallel to hinge line.* Control surfaces and supporting hinge brackets shall be designed for inertia loads acting parallel to the hinge line.

NOTE: In lieu of a more rational analysis the inertia loads may be assumed to be equal to KW, where:
$K=24$ for vertical surfaces.
$K=12$ for horizontal surfaces,
$W=$weight of the movable surfaces.

24. By amending § 4b.222 to read as follows:

§ 4b.222 *Tabs.* The following shall apply to tabs and their installations.

(a) *Trimming tabs.* Trimming tabs shall be designed to withstand loads arising from all likely combinations of tab setting, primary control position, and airplane speed, obtainable without exceeding the flight load conditions prescribed for the airplane as a whole, when the effect of the tab is being opposed by pilot effort loads up to those specified in § 4b.220 (a).

(b) *Balancing tabs.* Balancing tabs shall be designed for deflections consistent with the primary control surface loading conditions.

(c) *Servo tabs.* Servo tabs shall be designed for all deflections consistent with the primary control surface loading conditions achievable within the pilot maneuvering effort (see § 4b.220 (a)) with due regard to possible opposition from the trim tabs.

25. By rescinding figure 4b–15 and inserting in lieu thereof new figures 4b–15a, 4b–15b, and 4b–15c and by amending §§ 4b.250 through 4b.257 to read as follows:

WATER LOADS

§ 4b.250 *General.* The structure of hull and float type seaplanes shall be designed for water loads developed during take-off and landing with the seaplane in any attitude likely to occur in normal operation at appropriate forward and sinking velocities under the most

severe sea conditions likely to be encountered. Unless a more rational analysis of the water loads is performed, the requirements of §§ 4b.251 through 4b.258 shall apply.

§ 4b.251 *Design weights and center of gravity positions*—(a) *Design weights.* The water load requirements shall be complied with at all operating weights up to the design landing weight except that for the take-off condition prescribed in § 4b.255 the design take-off weight shall be used.

(b) *Center of gravity positions.* The critical center of gravity positions within the limits for which certification is sought shall be considered to obtain maximum design loads for each part of the seaplane structure.

§ 4b.252 *Application of loads.* (a) The seaplane as a whole shall be assumed to be subjected to the loads corresponding with the load factors specified in § 4b.253, except as otherwise prescribed. In applying the loads resulting from the load factors prescribed in § 4b.253, it shall be permissible to distribute the loads over the hull bottom in order to avoid excessive local shear loads and bending moments at the location of water load application, using pressures not less than those prescribed in § 4b.256 (b).

(b) For twin float seaplanes, each float shall be treated as an equivalent hull on a fictitious seaplane having a weight equal to one-half the weight of the twin float seaplane.

(c) Except in the take-off condition of § 4b.255, the aerodynamic lift on the seaplane during the impact shall be assumed to be ⅔ of the weight of the seaplane.

§ 4b.253 *Hull and main float load factors.* Water reaction load factors shall be computed as follows:

For the step landing case:

$$n_W = \frac{C_1 V_{s_0}^2}{\tan^{2/3}\beta W^{1/3}};$$

For the bow and stern landing cases:

$$n_W = \frac{C_1 V_{s_0}^2}{\tan^{2/3}\beta W^{1/3}} \times \frac{K_1}{(1+r_x^2)^{2/3}};$$

where:

n_W = water reaction load factor (water reaction divided by the seaplane weight);

C_1 = empirical seaplane operations factor equal to 0.009, except that this factor shall not be less that that necessary to obtain the minimum value of step load factor of 2.33;

V_{s_0} = seaplane stalling speed (mph) with landing flaps extended in the appropriate position and with no slipstream effect;

β = angle of dead rise at the longitudinal station at which the load factor is being determined (see fig. 4b–15a);

W = seaplane design landing weight in pounds;

K_1 = empirical hull station weighing factor. (See fig. 4b–15b.) For a twin float seaplane, in recognition of the effect of flexibility of the attachment of the floats to the seaplane, it shall be acceptable to reduce the factor K_1 at the bow and stern to 0.8 of the value shown in figure 4b-15b. This reduction shall not apply to the float design but only to the design of the carry-through and seaplane structure.

r_x = ratio of distance, measured parallel to hull reference axis, from the center of gravity of the seaplane to the hull longitudinal station at which the load factor is being computed to the radius of gyration in pitch of the seaplane, the hull reference axis being a straight line, in the plane of symmetry, tangential to the keel at the main step.

§ 4b.254 *Hull and main float landing conditions*—(a) *Symmetrical step landing.* The limit water reaction load factor shall be in accordance with § 4b.253. The resultant water load shall be applied at the keel through the center of gravity perpendicularly to the keel line.

(b) *Symmetrical bow landing.* The limit water reaction load factor shall be in accordance with § 4b.253. The resultant water load shall be applied at the keel ⅓ of the longitudinal distance from the bow to the step, and shall be directed perpendicularly to the keel line.

(c) *Symmetrical stern landing.* The limit water reaction load factor shall be in accordance with § 4b.253. The resultant water load shall be applied at the keel at a point 85 percent of the longitudinal distance from the step to the stern post, and shall be directed perpendicularly to the keel line.

(d) *Unsymmetrical landing; hull type and single float seaplanes.* Unsymmetrical step, bow, and stern landing conditions shall be investigated. The loading for each condition shall consist of an upward component and a side component equal, respectively, to 0.75 and 0.25 tan β times the resultant load in the corresponding symmetrical landing condition. (See paragraphs (a) (b), and (c) of this section.) The point of application and direction of the upward component of the load shall be the same as that in the symmetrical condition, and the point of application of the side component shall be at the same longitudinal station as the upward component but directed inward perpendicularly to the plane of symmetry at a point midway between the keel and chine lines.

(e) *Unsymmetrical landing; twin*

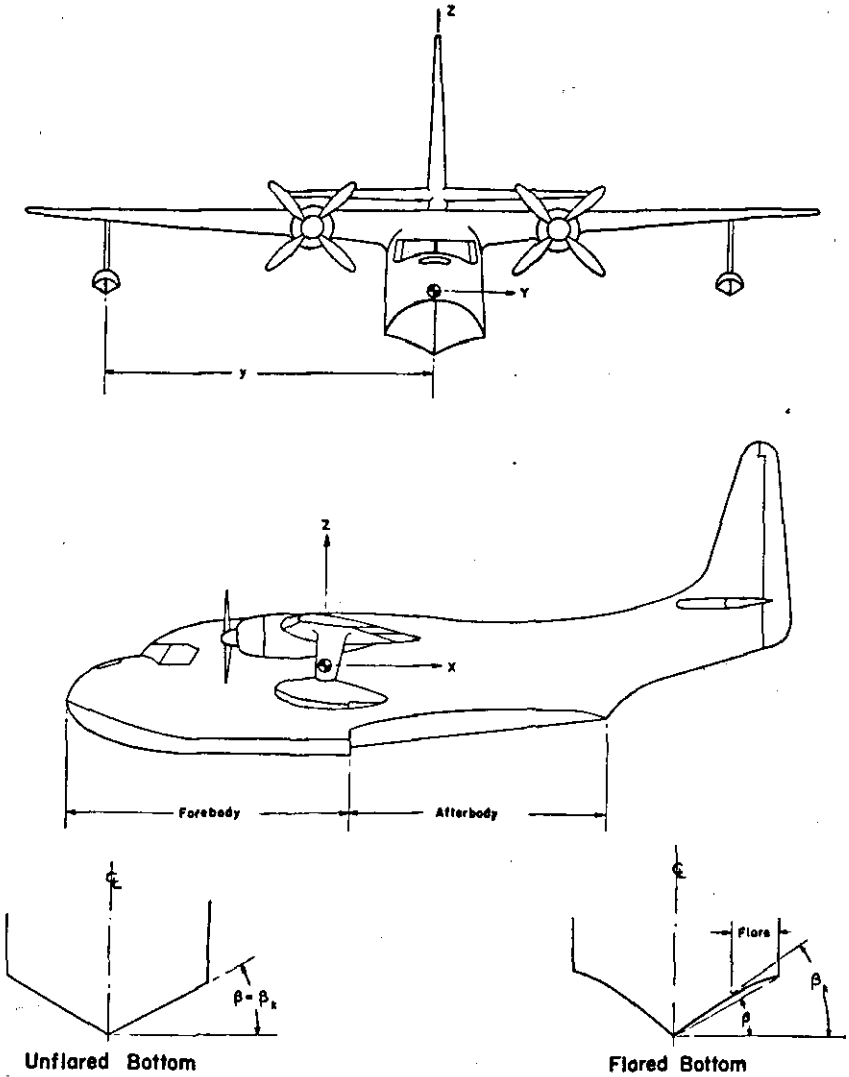

FIGURE 4b–15a—Pictorial definition of angles, dimensions, and directions on a seaplane.

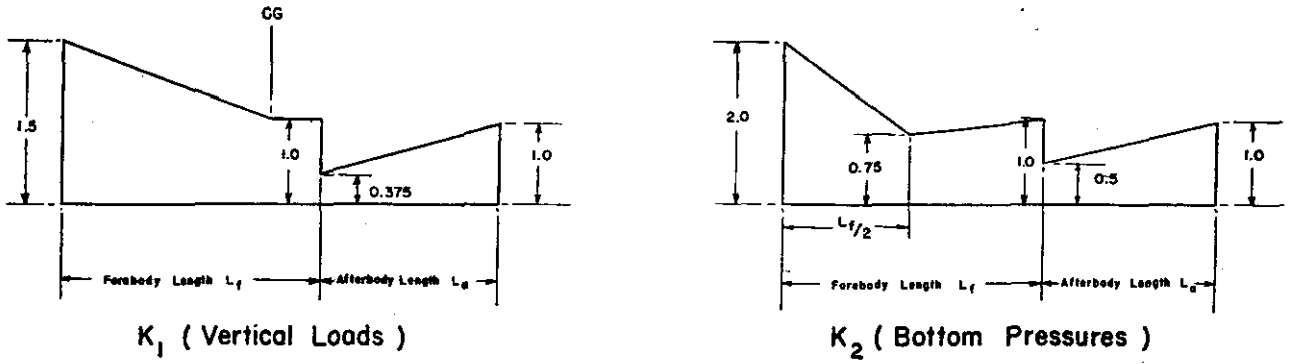

FIGURE 4b–15b—Hull station weighing factor.

float seaplanes. The unsymmetrical loading shall consist of an upward load at the step of each float of 0.75 and a side load of 0.25 tan β at one float times the step landing load obtained in accordance with § 4b.253. The side load shall be directed inboard perpendicularly to the plane of symmetry midway between the keel and chine lines of the float at the same longitudinal station as the upward load.

§ 4b.255 *Hull and main float take-off condition.* The provisions of this section shall apply to the design of the wing and its attachment to the hull or main float. The aerodynamic wing lift shall be assumed to be zero. A downward inertia load shall be applied and shall correspond with the following load factor:

$$n=\frac{C_{TO}\ V_{s_1}^{\ 2}}{\tan^{2/3}\beta W^{1/3}};$$

where:

n = inertia load factor;
C_{TO} = empirical seaplane operations factor equal to 0.003;
V_{s_1} = seaplane stalling speed (mph) at the design take-off weight with the flaps extended in the appropriate take-off position;
β = angle of dead rise at the main step (degrees);
W = seaplane design take-off weight in pounds.

§ 4b.256 *Hull and main float bottom pressures.* The provisions of this section shall apply to the design of the hull and main float structure, including frames and bulkheads, stringers, and bottom plating. In the absence of more rational data, the pressures and distributions shall be as follows:

(a) *Local pressures.* The following pressure distributions are applicable for the design of the bottom plating and stringers and their attachments to the supporting structure. The area over which these pressures are applied shall be such as to simulate pressures occurring during high localized impacts on the hull or float, and need not extend over an area which would induce critical stresses in the frames or in the overall structure.

(1) *Unflared bottom.* The pressure at the keel (psi) shall be computed as follows:

$$P_k=C_2\frac{K_2\ V_{s_1}^{\ 2}}{\tan\beta_k};$$

where:

P_k = pressure at the keel;
C_2 = 0.0016;
K_2 = hull station weighing factor (see fig. 4b–15b);
V_{s_1} = seaplane stalling speed (mph) at the design take-off weight with flaps extended in the appropriate take-off position;
β_k = angle of dead rise at keel (see fig. 4b–15a).

The pressure at the chine shall be 0.75 P_k, and the pressures between the keel and chine shall vary linearly. (See fig. 4b–15c.)

(2) *Flared bottom.* The pressure distribution for a flared bottom shall be that for an unflared bottom prescribed in subparagraph (1) of this paragraph, except that the pressure at the chine shall be computed as follows:

$$P_{ch}=C_3\frac{K_2\ V_{s_1}^{\ 2}}{\tan\beta};$$

where:

P_{ch} = pressure at the chine;
C_3 = 0.0012;
K_2 = hull station weighing factor (see fig. 4b–15b);
V_{s_1} = seaplane stalling speed (mph) at the design take-off weight with flaps extended in the appropriate take-off position;
β = angle of dead rise at appropriate station.

The pressure at the beginning of the flare shall be the same as for an unflared bottom, and the pressure between the chine and the beginning of the flare shall vary linearly. (See fig. 4b–15c.)

(b) *Distributed pressures.* The following distributed pressures are applicable for the design of the frames, keel, and chine structure. These pressures shall be uniform and shall be applied simultaneously over the entire hull or main float bottom. The loads so obtained shall be carried into the sidewall structure of the hull proper, but need not be transmitted in a fore and aft direction as shear and bending loads.

(1) *Symmetrical.* The symmetrical pressures shall be computed as follows:

$$P=C_4\frac{K_2\ V_{s_0}^{\ 2}}{\tan\beta};$$

where:

P = pressure;
$C_4=0.078C_1$ (for C_1 see § 4b.253);
K_2 = hull station weighing factor (see fig. 4b–15b);
V_{s_0} = seaplane stalling speed (mph) with landing flaps extended in the appropriate position and with no slipstream effect;
β = angle of dead rise at appropriate station.

(2) *Unsymmetrical.* The unsymmetrical pressure distribution shall consist of the pressures prescribed in subparagraph (1) of this paragraph on one side of the hull or main float center line and one-half of that pressure on the other side of the hull or main float center line. (See fig. 4b–15c.)

§ 4b.257 *Auxiliary float loads.* Auxiliary floats, their attachments, and supporting structure shall be designed for the following conditions. In the cases specified in paragraphs (a), (b), (c), and (d) of this section it shall be acceptable to distribute the prescribed water loads over the float bottom to avoid excessive local loads, using bottom pressures not less than those prescribed in paragraph (f) of this section.

(a) *Step loading.* The resultant water load shall be applied in the plane of symmetry of the float at a point three-fourths of the distance from the bow to the step and shall be perpendicular to the keel. The resultant limit load shall be computed as follows, except that the value of L need not exceed three times the weight of the displaced water when the float is completely submerged:

$$L=\frac{C_5\ V_{s_0}^{\ 2}\ W^{2/3}}{\tan^{2/3}\beta_s\ (1+r_y^{\ 2})^{2/3}};$$

where:

L = limit load;
C_5 = 0.004
V_{s_0} = seaplane stalling speed (mph) with landing flaps extended in the appropriate position and with no slipstream effect;
W = seaplane design landing weight in pounds;
β_s = angle of dead rise at a station ¾ of the distance from the bow to the step, but need not be less than 15 degrees;
r_y = ratio of the lateral distance between the center of gravity and the plane of symmetry of the float to the radius of gyration in roll.

(b) *Bow loading.* The resultant limit load shall be applied in the plane of symmetry of the float at a point one-fourth of the distance from the bow to the step and shall be perpendicular to the tangent to the keel line at that point.

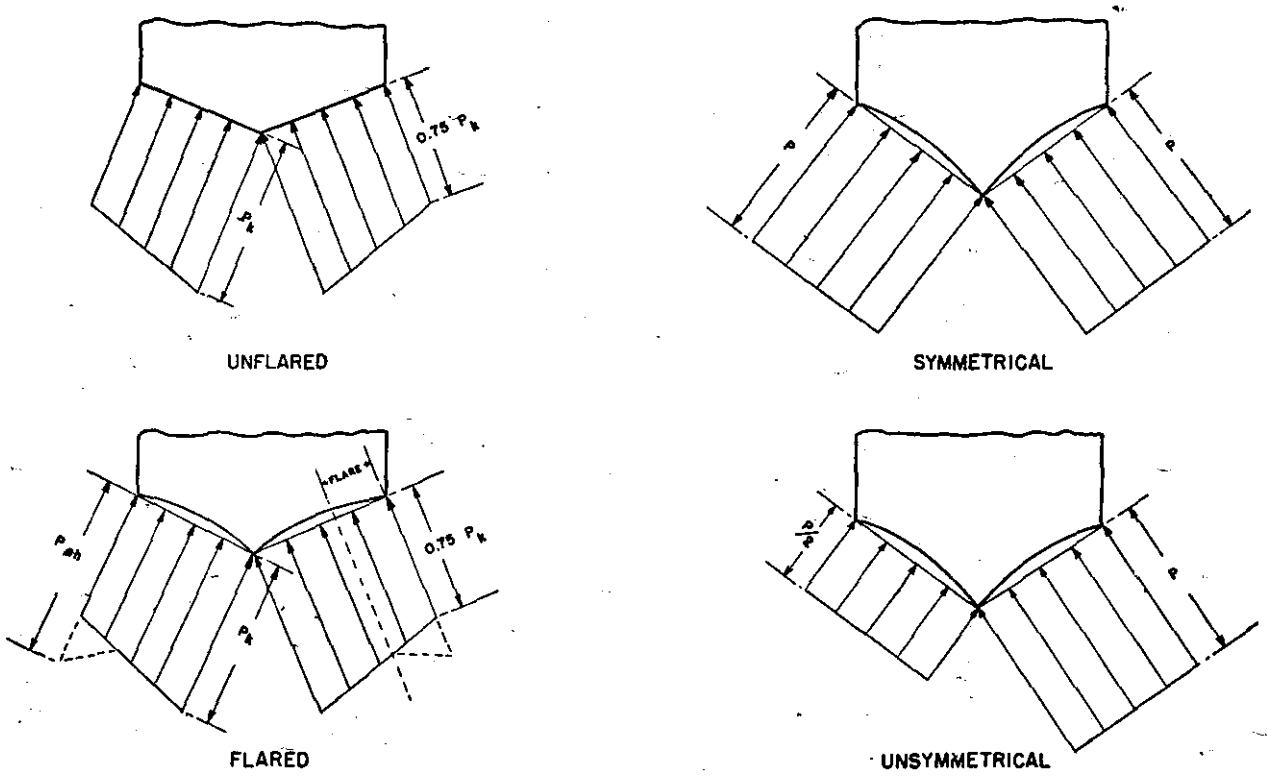

FIGURE 4b-15c—Transverse pressure distributions.

The magnitude of the resultant load shall be that specified in paragraph (a) of this section.

(c) *Unsymmetrical step loading.* The resultant water load shall consist of a component equal to 0.75 times the load specified in paragraph (a) of this section and a side component equal to 0.25 tan β times the load specified in paragraph (a) of this section. The side load shall be applied perpendicularly to the plane of symmetry of the float at a point midway between the keel and the chine.

(d) *Unsymmetrical bow loading.* The resultant water load shall consist of a component equal to 0.75 times the load specified in paragraph (b) of this section and a side component equal to 0.25 tan β times the load specified in paragraph (b) of this section. The side load shall be applied perpendicularly to the plane of symmetry at a point midway between the keel and the chine.

(e) *Immersed float condition.* The resultant load shall be applied at the centroid of the cross section of the float at a point one-third of the distance from the bow to the step. The limit load components shall be as follows:

$$\text{vertical} = \rho g V$$

$$\text{aft} = C_x \frac{\rho}{2} V^{2/3} (K V_{s_0})^2$$

$$\text{side} = C_y \frac{\rho}{2} V^{2/3} (K V_{s_0})^2$$

where:

ρ = mass density of water;
V = volume of float;
C_x = coefficient of drag force, equal to 0.10;
C_y = coefficient of side force, equal to 0.08;
K = 0.8, except that lower values shall be acceptable if it is shown that the floats are incapable of submerging at a speed of 0.8 V_{s_0} in normal operations;
V_{s_0} = seaplane stalling speed (mph) with landing flaps extended in the appropriate position and with no slipstream effect.

(f) *Float bottom pressures.* The float bottom pressures shall be established in accordance with § 4b.256 (a) and (b). The angle of dead rise to be used in determining the float bottom pressures shall be as defined in paragraph (a) of this section.

26. By amending § 4b.260 (a) (2) to read as follows:

§ 4b.260 *General.* * * *
(a) * * *

(2) Forward	9.0g

27. By amending § 4b.306 (d) to read as follows:

§ 4b.306 *Material strength properties and design values.* * * *
(d) The strength, detail design, and fabrication of the structure shall be such as to minimize the probability of disastrous fatigue failure.

NOTE: Points of stress concentration are one of the main sources of fatigue failure.

28. By rescinding §§ 4b.308 and 4b.309 and adding a new § 4b.308 to read as follows:

§ 4b.308 *Flutter, deformation, and vibration.* Compliance with the following provisions shall be shown by such calculations, resonance tests, or other tests as are found necessary by the Administrator.

(a) *Flutter prevention.* The airplane shall be designed to be free from flutter of wing and tail units, including all control and trim surfaces, and from divergence (i. e. unstable structural distortion due to aerodynamic loading), at all speeds up to 1.2 V_D. A smaller margin above V_D shall be acceptable if the characteristics of the airplane (including the effects of compressibility) render a speed of 1.2 V_D unlikely to be achieved, and if it is shown that a proper margin of damping exists at speed V_D. In the absence of more accurate data, the terminal velocity in a dive of 30 degrees to the horizontal shall be acceptable as the maximum speed likely to be achieved. If concentrated balance weights are used on control surfaces, their effectiveness and strength, including supporting structure, shall be substantiated.

(b) *Loss of control due to structural deformation.* The airplane shall be designed to be free from control reversal and from undue loss of longitudinal, lateral, and directional stability and control as a result of structural deformation, including that of the control surface covering, at all speeds up to the

speed prescribed in paragraph (a) of this section for flutter prevention.

(c) *Vibration and buffeting.* The airplane shall be designed to withstand all vibration and buffeting which might occur in any likely operating conditions.

29. By amending § 4b.324 by adding a new sentence to paragraph (b) to read as follows: "For airplanes with flaps which are not subjected to slipstream conditions, the structure shall be designed for the loads imposed when the wing flaps on one side are carrying the most severe load occurring in the prescribed symmetrical conditions and those on the other side are carrying not more than 80 percent of that load."

30. By amending § 4b.326 to read as follows:

§ 4b.326 *Control system locks.* Provision shall be made to prevent damage to the control surfaces (including tabs) and the control system which might result from gusts striking the airplane while it is on the ground or water (see also § 4b.226). If a device provided for this purpose, when engaged, prevents normal operation of the control surfaces by the pilot, it shall comply with the following provisions.

(a) The device shall either automatically disengage when the pilot operates the primary flight controls in a normal manner, or it shall limit the operation of the airplane in such a manner that the pilot receives unmistakable warning at the start of take-off.

(b) Means shall be provided to preclude the possibility of the device becoming inadvertently engaged in flight.

31. By amending § 4b.329 (a) (5) to read as follows:

§ 4b.329 *Control system details; general.* * * *

(a) *Cable systems.* * * *

(5) All pulleys and sprockets shall be provided with closely fitted guards to prevent the cables and chains being displaced or fouled.

32. By amending § 4b.334 by adding a new subparagraph (3) to paragraph (a) thereof to read as follows:

§ 4b.334 *Retracting mechanism*—(a) *General.* * * *

(3) Landing gear doors, their operating mechanism, and their supporting structure shall be designed for the conditions of air speed and load factor prescribed in subparagraphs (1) and (2) of this paragraph, and in addition they shall be designed for the yawing maneuvers prescribed for the airplane.

33. By amending § 4b.335 to read as follows:

§ 4b.335 *Wheels.* Main wheels and nose wheels shall be of an approved type. The following provisions shall apply.

(a) The maximum static load rating of each main wheel and nose wheel shall not be less than the corresponding static ground reaction under the design take-off weight of the airplane and the critical center of gravity position.

(b) The maximum limit load rating of each main wheel and nose wheel shall not be less than the maximum radial limit load determined in accordance with the applicable ground load requirements of this part (see §§ 4b.230 through 4b.236).

(c) The maximum kinetic energy capacity rating of each main wheel-brake assembly shall not be less than the kinetic energy absorption requirement determined as follows:

$$KE = \frac{0.0334 W V_{s_0}^2}{N};$$

where:

KE = kinetic energy per wheel (ft. lb.);
W = design landing weight (lb.);
V_{s_0} = power-off stalling speed of the airplane (mph) at sea level at the design landing weight and in the landing configuration;
N = number of main wheels.

NOTE: The expression for kinetic energy assumes an equal distribution of braking between main wheels. In cases of unequal distribution the expression requires appropriate modification.

(d) The minimum stalling speed rating of each main wheel-brake assembly, i. e., the initial speed used in the dynamometer tests, shall not be greater than the V_{s_0} used in the determination of kinetic energy in accordance with paragraph (c) of this section.

NOTE: The provision of this paragraph is based upon the assumption that the testing procedures for wheel-brake assemblies involve a specified rate of deceleration, and, therefore, for the same amount of kinetic energy the rate of energy absorption (the power absorbing ability of the brake) varies inversely with the initial speed.

34. By amending § 4b.336 (a) (2) to read as follows:

§ 4b.336 *Tires.* (a) * * *

(2) Load on each main wheel tire equal to the corresponding static ground reaction at the critical center of gravity position.

35. By amending § 4b.336 (a) (3) by inserting the words "most critical" preceding the words "center of gravity".

36. By amending § 4b.337 (a) (1) to read as follows:

§ 4b.337 *Brakes*—(a) *General.* (1) The airplane shall be equipped with brakes of an approved type. The brake ratings shall be in accordance with § 4b.335 (c) and (d).

37. By amending the second sentence of § 4b.338 to read: "The maximum limit load rating of each ski shall not be less than the maximum limit load determined in accordance with the applicable ground load requirements of this part. (See §§ 4b.230 through 4b.236.)"

38. By amending § 4b.341 to read as follows:

§ 4b.341 *Seaplane main floats.* Seaplane main floats shall be of an approved type and shall comply with the provisions of §4b.250. In addition, the following shall apply.

(a) *Buoyancy.* Each seaplane main float shall have a buoyancy of 80 percent in excess of that required to support the maximum weight of the seaplane in fresh water.

(b) *Compartmentation.* Each seaplane main float shall contain not less than 5 water-tight compartments. The compartments shall have approximately equal volumes.

39. By amending the title and paragraph (a) of § 4b.342 to read as follows:

§ 4b.342 *Boat hulls.* (a) The hulls of boat seaplanes and amphibians shall be divided into watertight compartments so that, with any two adjacent compartments flooded, the buoyancy of the hull and auxiliary floats (and wheel tires, if used) will provide a sufficient margin of positive stability to minimize capsizing in rough fresh water.

40. By amending the title of § 4b.352 to read: *Windshield and windows.*

41. By adding a new paragraph (c) to § 4b.352 to read as follows:

§ 4b.352 *Windshield and windows.* * * *

(c) The design of windshields and windows in pressurized airplanes shall be based on factors peculiar to high altitude operation. (See also § 4b.373.)

NOTE: Factors peculiar to high altitude operation as they may affect the design of windshields and windows include the effects of continuous and cyclic pressurization loadings, the inherent characteristics of the material used, the effects of temperatures and temperature differentials, etc.

42. By adding a new paragraph (g) to § 4b.353 to read as follows:

§ 4b.353 *Controls.* * * *

(g) Where the work load on the flight crew is such as to require a flight engineer (see § 4b.720), a flight engineer station shall be provided. The station shall be so located and arranged that the flight crew members can perform their functions efficiently and without interfering with each other.

43. By amending § 4b.358 (a) by adding a second sentence to read as follows: "Seats and berths shall be of an approved type (see also § 4b.643 concerning safety belts)."

44. By amending § 4b.358 (c) to read as follows:

§ 4b.358 *Seats, berths, and safety belts.* * * *

(c) *Strength.* All seats and berths and their supporting structure shall be designed for occupant weight of 170 pounds with due account taken of the maximum load factors, inertia forces, and reactions between occupant, seat, and safety belt or harness corresponding with all relevant flight and ground load conditions, including the emergency landing conditions prescribed in § 4b.260. In addition, the following shall apply.

(1) Pilot seats shall be designed for the reactions resulting from the application of pilot forces to the flight controls as prescribed in § 4b.224.

(2) In determining the strength of the seat or berth attachments to the structure, and the safety belt or shoulder harness attachments to the seat, berth, or structure, the inertia forces specified in § 4b.260 (a) shall be multiplied by a factor of 1.33.

45. By amending § 4b.359 (c) to read as follows:

§ 4b.359 *Cargo and baggage compartments.* * * *

(c) Provisions shall be made to protect the passengers and crew from injury by the contents of any compartment, taking into account the emergency landing conditions of § 4b.260.

46. By amending § 4b.371 by rescinding all of the section excepting paragraph (b) thereof, by redesignating paragraph (b) as paragraph (d), and by adding new paragraphs (a) through (c) to read as follows:

§ 4b.371 *Ventilation.* (a) All crew compartments shall be ventilated by providing a sufficient amount of fresh air to enable the crew members to perform their duties without undue discomfort or fatigue.

NOTE: A fresh air supply of approximately 10 cubic feet per minute is considered a minimum for each crew member.

(b) Ventilating air in crew and passenger compartments shall be free of harmful or hazardous concentrations of gases or vapors.

NOTE: Carbon monoxide concentrations in excess of one part in 20,000 parts of air are considered hazardous. Carbon dioxide in excess of 3 percent by volume (sea level equivalent) is considered hazardous in the case of crew members. Higher concentrations of carbon dioxide may not necessarily be hazardous in crew compartments if appropriate protective breathing equipment is available.

(c) Provision shall be made to insure the conditions prescribed in paragraph (b) of this section in the event of reasonably probable failures or malfunctioning of the ventilating, heating, pressurization, or other systems and equipment.

NOTE: Examples of acceptable provisions include secondary isolation, integral protective devices, and crew warning and shutoff for equipment the malfunctioning of which could introduce harmful or hazardous quantities of smoke or gases.

47. By amending § 4b.372 to read as follows:

§ 4b.372 *Heating systems.* Combustion heaters shall be of an approved type and shall comply with the fire protection requirements of § 4b.386. Engine exhaust heaters shall comply with the provisions of § 4b.467 (c) and (d).

48. By amending the reference at the end of § 4b.373 to read as follows: "(See also §§ 4b.216 (c) and 4b.352.)"

49. By amending § 4b.374 to read as follows:

§ 4b.374 *Pressure supply.* (See § 4b.477 (c).)

50. By amending the heading "Fire Prevention" and § 4b.380 to read as follows:

FIRE PROTECTION

§ 4b.380 *General.* Compliance shall be shown with the fire protection requirements of §§ 4b.381 through 4b.386. (See also §§ 4b.480 through 4b.489.) In addition, the following shall apply.

(a) *Hand fire extinguishers.* Hand fire extinguishers shall be of an approved type. The types and quantities of extinguishing agents shall be appropriate for the types of fires likely to occur in the compartments where the extinguishers are intended for use. Extinguishers intended for use in personnel compartments shall be such as to minimize the hazard of toxic gas concentrations.

(b) *Built-in fire extinguishers.* Where a built-in fire extinguishing system is required, its capacity in relation to the compartment volume and ventilation rate shall be sufficient to combat any fire likely to occur in the compartment. All built-in fire extinguishing systems shall be so installed that any extinguisher agent likely to enter personnel compartments will not be hazardous to the occupants and that discharge of the extinguisher cannot result in structural damage. (See aso §4b.371.)

(c) *Protective breathing equipment.* If the airplane contains Class A or B cargo compartments (see § 4b.383), protective breathing equipment shall be installed for the use of appropriate crew members. (See § 4b.651 (h).)

51. By amending § 4b.381 by adding paragraph (e) and (f) to read as follows:

§ 4b.381 *Cabin interiors.* * * *

(e) At least one hand fire extinguisher shall be provided for use by the flight crew.

(f) In addition to the requirements of paragraph (e) of this section at least the following number of hand fire extinguishers conveniently located for use in passenger compartments shall be provided according to the passenger capacity of the airplane:

Passenger capacity:	*Minimum number of fire extinguishers*
6 or less	0
7 through 30	1
31 through 60	2
61 or more	3

52. By amending § 4b.383 (a) by changing the title thereof to read "*Class A.*" and by deleting from the first sentence the words "in the 'A' category" and inserting in lieu thereof the words "as A".

53. By amending § 4b.383 (b) by changing the title thereof to read "*Class B.*" and by deleting from the first sentence the words "in the 'B' category" and inserting in lieu thereof the words "as B".

54. By amending § 4b.383(b) (4) by deleting the clause "except that additional service lining of flame-resistant material shall be acceptable."

55. By amending § 4b.383 (c) by changing the title thereof to read "*Class C.*" and by deleting from the first sentence the words "in the 'C' category" and inserting in lieu thereof the words "as C".

56. By amending § 4b.383 (c) (4) by deleting the clause "except that additional service lining of flame-resistant material shall be acceptable."

57. By adding a new paragraph (d) to § 4b.383 to read as follows:

§ 4b.383 *Cargo compartment classification.* * * *

(d) *Class D.* Cargo and baggage compartments shall be classified as D if they are so designed and constructed that a fire occurring therein will be completely confined without endangering the safety of the airplane or the occupants. Compliance shall be shown with the following.

(1) Each compartment shall be equipped with an approved type smoke detector or fire detector other than heat detector to give warning at the pilot or flight engineer station.

(2) Means shall be provided to exclude hazardous quantities of smoke, flames, or other noxious gases from entering into any compartment occupied by the crew or passengers.

(3) Ventilation and drafts shall be controlled within each compartment so that any fire likely to occur in the compartment will not progress beyond safe limits.

NOTE: For compartments having a volume not in excess of 500 cu. ft. an airflow of not more than 1,500 cu. ft. per hour is considered acceptable. For larger compartments lesser airflow may be applicable.

(4) The compartment shall be completely lined with fire-resistant material.

(5) Consideration shall be given to the effect of heat within the compartment on adjacent critical parts of the airplane.

58. By amending § 4b.384 (a) by deleting therefrom the words "category 'C'" and inserting in lieu thereof the words "class C".

59. By adding new §§ 4b.385 and 4b.386 to read as follows:

§ 4b.385 *Flammable fluid fire protection.* In areas of the airplane where flammable fluids or vapors might be liberated by leakage or failure in fluid systems, design precautions shall be made to safeguard against the ignition of such fluids or vapors due to the operation of other equipment, or to control any fire resulting from such ignition.

§ 4b.386 *Combustion heater fire protection*—(a) *Combustion heater fire zones.* The following shall be considered as combustion heater fire zones and shall be protected against fire in accordance with applicable provisions of §§ 4b.480 through 4b 490.

(1) Region surrounding the heater, if such region contains any flammable fluid system components other than the heater fuel system which might be damaged by heater malfunctioning or which, in case of leakage or failure, might permit flammable fluids or vapors to reach the heaters.

(2) Region surrounding the heater, if the heater fuel system incorporates fittings the leakage of which would permit fuel or vapors to enter this region.

(3) That portion of the ventilating air passage which surrounds the combustion chamber.

(b) *Ventilating air ducts.* (1) Ventilating air ducts which pass through fire zones shall be of fireproof construction.

(2) Unless isolation is provided by the use of fireproof valves or other equivalently effective means, the ventilating air duct downstream of the heater shall be of fireproof construction for a sufficient distance to assure that any fire originat-

ing from within the heater can be contained within the duct.

(3) Portions of ventilating ducts passing through regions in the airplane where flammable fluid systems are located shall be so constructed or isolated from such systems that failure or malfunctioning of the flammable fluid system components cannot introduce flammable fluids or vapors into the ventilating airstream.

(c) *Combustion air ducts.* (1) Combustion air ducts shall be of fireproof construction for a distance sufficient to prevent damage from backfiring or reverse flame propagation.

(2) Combustion air ducts shall not communicate with the ventilating airstream unless it is demonstrated that flames from backfires or reverse burning cannot enter the ventilating airstream under any conditions of ground or flight operation including conditions of reverse flow or malfunctioning of the heater or its associated components.

(3) Combustion air ducts shall not restrict prompt relief of backfires which can cause heater failure due to pressures generated within the heater.

(d) *Heater controls; general.* Provision shall be made to prevent hazardous accumulations of water or ice on or within any heater control components, control system tubing, or safety controls.

(e) *Heater safety controls.* (1) In addition to the components provided for normal continuous control of air temperature, air flow, and fuel flow, means independent of such components shall be provided with respect to each heater to shut off automatically that heater's ignition and fuel supply at a point remote from the heater when the heat exchanger temperature or ventilating air temperature exceed safe limits or when either the combustion air flow or the ventilating air flow becomes inadequate for safe operation. The means provided for this purpose for any individual heater shall be independent of all components serving other heaters the heat output of which is essential to the safe operation of the airplane.

(2) Warning means shall be provided to indicate to the crew when a heater, the heat output of which is essential to the safe operation of the airplane, has been shut off by the operation of the automatic means prescribed in subparagraph (1) of this paragraph.

(f) *Air intakes.* Combustion and ventilating air intakes shall be so located that no flammable fluids or vapors can enter the heater system under any conditions of ground or flight operation either during normal operation or as a result of malfunctioning, failure, or improper operation of other airplane components.

(g) *Heater exhaust.* Heater exhaust systems shall comply with the provisions of § 4b.467 (a) and (b). In addition, the following shall apply:

(1) Exhaust shrouds shall be sealed so that flammable fluids and hazardous quantities of vapors cannot reach the exhaust systems through joints.

(2) Exhaust systems shall not restrict the prompt relief of backfires which can cause heater failure due to pressures generated within the heater.

(h) *Heater fuel systems.* Heater fuel systems shall comply with all portions of the powerplant fuel system requirements which affect safe heater operations. In addition, heater fuel system components within the ventilating airstream shall be protected by shrouds so that leakage from such components cannot enter the ventilating airstream.

(i) *Drains.* Means shall be provided for safe drainage of fuel accumulations which might occur within the combustion chamber or the heat exchanger. Portions of such drains which operate at high temperatures shall be protected in the same manner as heater exhausts (see paragraph (g) of this section). Drains shall be protected against hazardous ice accumulations in flight and during ground operation.

60. By amending the title of Subpart E by deleting the words "(Reciprocating Engines)" therefrom.

61. By amending the heading "General" immediately preceding § 4b.400 to read "Installation".

62. By amending the title of § 4b.400 to read *"General."* and by considering the present text of paragraph (a) as the initial text of this section.

63. By adding a new § 4b.400 (a) to read as follows:

§ 4b.400 *General.* * * *

(a) *Scope.* Reciprocating engine installations shall comply with the provisions of this subpart. Turbine engine installations shall comply with such of the provisions of this subpart as are found applicable to the specific type of installation.

64. By amending § 4b.400 (b) by adding a title to read *"Functioning."*

65. By amending § 4b.400 (c) by adding a title to read *"Accessibility."*

66. By amending § 4b.400 (d) by adding a title to read *"Electrical bonding."*

67. By amending § 4b.401 (b) to read as follows:

§ 4b.401 *Engines.* * *

(b) *Engine isolation.* The powerplants shall be arranged and isolated each from the other to permit operation in at least one configuration in a manner such that the failure or malfunctioning of any engine, or of any system of the airplane the failure of which can affect an engine, will not prevent the continued safe operation of the remaining engine(s) or require immediate action by crew member for continued safe operation.

68. By inserting a new sentence at the end of § 4b.401 (c) following the word "construction" to read as follows: "If hydraulic propeller feathering systems are used for this purpose, the feathering lines shall be fire-resistant under the operating conditions which may be expected to exist when feathering is being accomplished."

69. By amending § 4b.406 (a) to read as follows:

§ 4b.406 *Propeller de-icing provisions.* (a) Airplanes intended for operation under atmospheric conditions conducive to the formation of ice on propellers or on accessories where ice accumulation would jeopardize engine performance shall be provided with means for the prevention or removal of hazardous ice accumulations.

70. By amending § 4b.411 to read as follows:

§ 4b.411 *Fuel system independence.* The design of the fuel system shall comply with the requirements of § 4b.401 (b). Unless other provisions are made in compliance with this requirement, the fuel system shall be arranged to permit the supply of fuel to each engine through a system independent of any portion of a system supplying fuel to any other engine.

71. By amending § 4b.426 (a) (3) to read as follows:

§ 4b.426 *Fuel tank vents and carburetor vapor vents.* (a) * * *

(3) The vent shall be of sufficient size to prevent the existence of excessive differences of pressure between the interior and exterior of the tank during normal flight operation, during maximum rate of descent, and, if applicable, during refueling and defueling.

72. By adding a new § 4b.428 to read as follows:

§ 4b.428 *Under-wing fueling provisions.* Under-wing fuel tank connections shall be provided with means to prevent the escape of hazardous quantities of fuel from the tank in the event of malfunctioning of the fuel entry valve while the cover plate is removed. In addition to the normal means provided in the airplane for limiting the tank content, a means shall be installed to prevent damage to the tank in case of failure of the normal means.

73. By amending § 4b.430 to read as follows:

§ 4b.430 *Fuel pumps*—(a) *Main pumps.*

(1) If the engine fuel supply is maintained by means of pumps, one fuel pump for each engine shall be engine-driven.

(2) Fuel pumps shall meet the pertinent flow requirements of § 4b.413.

(3) All positive displacement fuel pumps shall incorporate an integral by-pass, unless provision is made for a continuous supply of fuel to all engines in case of failure of any one pump. Engine fuel injection pumps which are approved as an integral part of the engine need not incorporate a by-pass.

(4) If the emergency fuel pumps are all dependent upon the same source of motive power, the main fuel pumps shall be capable of providing sufficient fuel flow and pressure to maintain level flight at maximum weight and normal cruising power at an altitude of 6,000 feet with 110° F. fuel without the aid of any emergency fuel pump.

(b) *Emergency pumps.* (1) Emergency fuel pumps shall be provided to permit supplying all engines with fuel in case of failure of any one main fuel pump, except in the case of installations in which the only fuel pump used in the system is an engine fuel injection pump which is approved as an internal part of the engine.

(2) Emergency fuel pumps shall be available for immediate use in case of failure of any other fuel pump. No manipulation of fuel valves shall be necessary on the part of the crew to make an emergency fuel pump available to the engine which it is normally intended to serve when the fuel system is being operated in the configuration complying with the provisions of § 4b.411.

74. By adding a new § 4b.432 (e) to read as follows:

§ 4b.432 *Fuel system lines and fittings.* * * *

(e) Flexible hoses which might be adversely affected by exposure to high temperatures shall not be employed in locations where excessive temperatures will exist during operation or after engine shut-down.

75. By amending § 4b.437 (a) (2) to read as follows:

§ 4b.437 *Fuel jettisoning system.* * * *

(a) * * *

(2) Climb at the one-engine-inoperative best rate-of-climb speed with the critical engine inoperative, the remaining engine(s) at maximum continuous power.

76. By amending § 4b.440 (b) to read as follows:

§ 4b.440 *General.* * * *

(b) The oil tank capacity available for the use of the engine shall not be less than the product of the endurance of the airplane under critical operating times conditions the maximum permissible oil consumption rate of the engine under the same conditions, plus a suitable margin to assure system circulation. In lieu of a rational analysis of airplane range, a fuel-oil ratio of 30:1 by volume shall be acceptable for airplanes not provided with a reserve or transfer system.

77. By amending § 4b.441 (d) to read as follows:

§ 4b.441 *Oil tank construction.* * * *

(d) *Oil tank outlet.* Provision shall be made either to prevent entrance into the tank itself or into the tank outlet of any foreign object which might obstruct the flow of oil through the system. The oil tank outlet shall not be enclosed by any screen or guard which would reduce the flow of oil below a safe value at any operating temperature condition.

78. By amending § 4b.443 to read as follows:

§ 4b.443 *Oil tank installation.* The oil tank installation shall comply with the provisions of § 4b.422, except that the location of an engine oil tank in a designated fire zone shall be acceptable if the tank and its supports are of fireproof construction to the extent that damage by fire to any nonfireproof parts would not result in leakage or spillage of oil.

79. By adding a new sentence at the end of § 4b.455 to read as follows: "Means shall be provided to prevent excessive pressures from being generated in the cooling system."

80. By adding a new § 4b.463 (d) to read as follows:

§ 4b.463 *Induction system ducts.* * * *

(d) Induction system ducts within any fire zone for which a fire-extinguishing system is required shall be of fire-resistant construction.

81. By amending § 4b.467 (a) (4) to read as follows:

§ 4b.467 *Exhaust system and installation components*—(a) *General.* * * *

(4) Exhaust gases shall not discharge in a manner to cause a fire hazard with respect to any flammable fluid vent or drain.

82. By adding a new § 4b.467 (a) (7) to read as follows:

§ 4b.467 *Exhaust system and installation components*—(a) *General* * * *

(7) Exhaust shrouds shall be ventilated or insulated to avoid during normal operation a temperature sufficiently high to ignite any flammable fluids or vapors external to the shrouds.

83. By adding a new § 4b.467 (c) (5) to read as follows:

§ 4b.467 *Exhaust system and installation components.* * * *

(c) *Exhaust heat exchangers.* * * *

(5) Heat exchangers or muffs shall incorporate no stagnant areas or liquid traps which would increase the possibility of ignition of flammable fluids or vapors which might be present in case of failure or malfunctioning of components carrying flammable fluids.

84. By amending § 4b.467 (e) (4) to read as follows:

§ 4b.467 *Exhaust system and installation components.* * * *

(e) *Exhaust driven turbo-superchargers.* * * *

(4) Means shall be provided so that, in the event of malfunctioning of the normal turbo-supercharger control system, the turbine speed will not be greater than its maximum allowable value. The components provided for this purpose shall be independent of the normal turbo-supercharger controls with the exception of the waste gate operating components themselves.

85. By amending § 4b.474 (c) to read as follows:

§ 4b.474 *Propeller controls.* * * *

(c) *Propeller reversing controls.* Propeller reversing controls shall incorporate a means to prevent their inadvertent movement to the reverse position. The means provided shall require a distinct, and unmistakable operation by the crew in order to place the control in the reverse regime both in flight and on the ground.

86. By adding a new § 4b.477 (c) to read as follows:

§ 4b.477 *Powerplant accessories.* * * *

(c) If continued rotation of an engine-driven cabin supercharger or any remote accessory driven by the engine will constitute a hazard in case malfunctioning occurs, means shall be provided to prevent hazardous rotation of such accessory without interfering with the continued operation of the engine. (See also § 4b.371 (c).)

NOTE: Hazardous rotation may involve consideration of mechanical damage or sustained air flows which may be dangerous under certain conditions.

87. By adding new subparagraphs (3), (4), and (5) to § 4b.478 (b) to read as follows:

§ 4b.478 *Engine ignition systems.* * * *

(b) * * *

(3) Portions of magneto ground wires for separate ignition circuits which lie on the engine side of the fire wall shall be installed, located, or protected so as to minimize the possibility of simultaneous failure of two or more wires as a result of mechanical damage, electrical faults, etc.

(4) Ground wires for any engine shall not be routed through fire zones, except those associated with the engine which the wires serve, unless those portions of the wires which are located in such fire zones are fireproof or are protected against the possibility of damage by fire in a manner to render them fireproof. (See § 4b.472 for ignition switches.)

(5) Ignition circuits shall be electrically independent of all other electrical circuits except circuits used for analyzing the operation of the ignition system.

88. By amending § 4b.480 (a) (5) to read as follows:

§ 4b.480 *Designated fire zones.* (a) * * *

(5) Fuel-burning heaters and other combustion equipment installations as defined by § 4b.386.

89. By adding after § 4b.480 (a) the following note:

NOTE: See also § 4b.385.

90. By adding a new paragraph (c) to § 4b.480 to read as follows:

§ 4b.480 *Designated fire zones.* * * *

(c) The nacelle area immediately behind the fire wall shall comply with the provisions of §§ 4b.385, 4b.463 (d), 4b.478 (b), (4), 4b.481 (c), 4b.482 through 4b.485 and 4b.489. If a retractable landing gear is located in this area, compliance with this paragraph is required only with the landing gear retracted.

91. By adding a new paragraph (c) to § 4b.481 to read as follows:

§ 4b.481 *Flammable fluids.* * * *

(c) No component of a flammable fluid-carrying system shall be located in close proximity to materials which can absorb such a fluid.

92. By adding a new sentence at the end of § 4b.482 (a) to read: "Closing the fuel shutoff valve for any engine shall not make any of the fuel supply unavailable to the remaining engines."

93. By amending § 4b.482 (b) to read as follows:

§ 4b.482 *Shutoff means.* * * *

(b) Operation of the shutoff means shall not interfere with the subsequent emergency operation of other equipment, such as feathering the propeller.

94. By amending § 4b.482 (d) to read as follows:

§ 4b.482 *Shutoff means.* * * *

(d) Provisions shall be made to guard against inadvertent operation of the shutoff means and to make it possible for the crew to reopen the shutoff means in flight after it has once been closed.

95. By amending § 4b.484 (a) (1) by adding the words "and the engine induction system" after the words "designated fire zones".

96. By amending § 4b.484 (a) by adding a new subparagraph (4) to read as follows:

§ 4b.484 *Fire extinguisher systems—*(a) *General.* * * *

(4) The fire-extinguishing system for a nacelle shall be capable of protecting simultaneously all zones of the nacelle for which protection is provided.

97. By amending § 4b.484 (d) and (e) to read as follows:

§ 4b.484 *Fire extinguisher systems.* * * *

(d) *Extinguishing agent container compartment temperature.* Under all conditions in which the airplane is intended for operation, the temperature range of the extinguishing agent containers shall be maintained to assure that the pressure in the containers can neither fall below the minimum necessary to provide an adequate rate of extinguisher agent discharge nor rise above a safe limit so that the system will not be prematurely discharged.

(e) *Fire-extinguishing system materials.* All components of the fire extinguishing systems located in designated fire zones shall be constructed of fireproof materials.

98. By amending § 4b.485 by revising the first sentence thereof to read: "Quick-acting fire detectors of an approved type shall be provided in all designated fire zones, and they shall be sufficient in number and location to assure prompt detection of fire in such zones."

99. By adding new paragraphs (c), (d), and (e) to § 4b.485 to read as follows:

§ 4b.485 *Fire detector systems.* * * *

(c) Means shall be provided to permit the crew to check in flight the functioning of the electric circuit associated with the fire-detection system.

(d) Wiring and other components of detector systems which are located in fire zones shall be of fire-resistant construction.

(e) Detector system components for any fire zone shall not pass through other fire zones, unless they are protected against the possibility of false warnings resulting from fires in zones through which they pass. This requirement shall not be applicable with respect to zones which are simultaneously protected by the same detector and extinguisher systems.

100. By amending § 4b.487 (b) and (c) to read as follows:

§ 4b.487 *Cowling.* * * *

(b) Cowling shall have drainage and ventilation provisions as prescribed in § 4b.489.

(c) On airplanes equipped with a diaphragm complying with § 4b.488, the parts of the accessory section cowling which might be subjected to flame in the event of a fire in the engine power section of the nacelle shall be constructed of fireproof material and shall comply with the provisions of § 4b.486.

101. By redesignating § 4b.489 as § 4b.490.

102. By adding a new § 4b.489 to read as follows:

§ 4b.489 *Drainage and ventilation of fire zones.* (a) Provision shall be made for the rapid and complete drainage of all portions of designated fire zones in the event of failure or malfunctioning of components containing flammable fluids. The drainage provisions shall be so arranged that the discharged fluid will not cause an additional fire hazard.

(b) All designated fire zones shall be ventilated to prevent the accumulation of flammable vapors. Ventilation openings shall not be placed in locations which would permit the entrance of flammable fluids, vapors, or flame from other zones. The ventilation provisions shall be so arranged that the discharged vapors will not cause an additional fire hazard.

(c) Except with respect to the engine power section of the nacelle and the combustion heater ventilating air ducts, provision shall be made to permit the crew to shut off sources of forced ventilation in any fire zone, unless the extinguishing agent capacity and rate of discharge are based on maximum air flow through the zone.

103. By adding a new paragraph (j) to § 4b.603 to read as follows:

§ 4b.603 *Flight and navigational instruments.* * * *

(j) Maximum allowable air-speed indicator if an air-speed limitation results from compressibility hazards. (See § 4b.710.)

104. By amending § 4b.604 (d) and (h) to read as follows:

§ 4b.604 *Powerplant instruments.* * * *

(d) An individual fuel pressure indicator for each engine and either an independent warning device for each engine or a master warning device for all engines with means for isolating the individual warning circuit from the master warning device. * * *

(h) An individual oil pressure indicator for each engine and either an independent warning device for each engine or a master warning device for all engines with means for isolating the individual warning circuit from the master warning device.

105. By adding a new paragraph (m) to § 4b.604 to read as follows:

§ 4b.604 *Powerplant instruments.* * * *

(m) A device for each engine capable of indicating to the flight crew during flight any change in the power output, if the engine is equipped with an automatic propeller feathering system the operation of which is initiated by a power output measuring system.

106. By adding a new § 4b.606 to read as follows:

§ 4b.606 *Equipment, systems, and installations*—(a) *Functioning and reliability.* All equipment, systems, and installations the functioning of which is necessary in showing compliance with the Civil Air Regulations shall be designed and installed to insure that they will perform their intended functions reliably under all reasonably foreseeable operating conditions.

(b) *Hazards.* All equipment, systems, and installations shall be designed to safeguard against hazards to the airplane in the event of their malfunctioning or failure.

(c) *Power supply.* Where an installation the functioning of which is necessary in showing compliance with the Civil Air Regulations requires a power supply, such installation shall be considered an essential load on the power supply, and the power sources and the system shall be capable of supplying the following power loads in probable operating combinations and for probable durations:

(1) All loads connected to the system with the system functioning normally;

(2) All essential loads after failure of any one prime mover, power converter, or energy storage device;

(3) All essential loads after failure of any one engine on two- or three-engine airplanes, or after failure of any two engines on four-or-more-engine airplanes.

107. By amending § 4b.612 (a) (1) by adding the words "shall be of an approved type and" following the words "Air-speed indicating instruments".

108. By amending § 4b.612 (a) by adding a new subparagraph (6) to read as follows:

§ 4b.612 *Flight and navigational instruments*—(a) *Air-speed indicating systems.* * * *

(6) Where duplicate air-speed indicators are required, their respective pitot tubes shall be spaced apart to avoid damage to both tubes in the event of a collision with a bird.

109. By amending the title of § 4b.612 (b) to read "*Static air vent and pressure altimeter systems.*" and by adding new subparagraphs (4) and (5) to read as follows:

§ 4b.612 *Flight and navigational instruments.* * * *

(b) *Static air vent and pressure altimeter systems.* * * *

(4) Pressure altimeters shall be of an approved type and shall be calibrated to indicate pressure altitude in standard atmosphere with a minimum practicable instrument calibration error when the corresponding static pressures are applied to the instrument.

(5) The design and installation of the altimeter system shall be such that the error in indicated pressure altitude at sea level in standard atmosphere, excluding instrument calibration error, does not result in a reading more than 20 feet

high nor more than 50 feet low in the speed range between 1 3 V_{s_0} (flaps extended) and $1.8V_{s_1}$ (flaps retracted).

110. By amending § 4b.612 (d) by revising the first sentence thereof to read: "If an automatic pilot system is installed, it shall be of an approved type, and the following shall be applicable:"

111. By amending § 4b.612 (d) (1) by deleting therefrom the word "either" and by changing the word "or" to "and".

112. By amending § 4b.612 (d) (4) to read as follows:

§ 4b.612 *Flight and navigational instruments.* * * *

(d) *Automatic pilot system.* * * *

(4) The automatic pilot system shall be of such design and so adjusted that, within the range of adjustment available to the human pilot, it cannot produce hazardous loads on the airplane or create hazardous deviations in the flight path under any conditions of flight appropriate to its use either during normal operation or in the event of malfunctioning, assuming that corrective action is initiated within a reasonable period of time.

113. By amending § 4b.612 (e) to read as follows:

§ 4b.612 *Flight and navigational instruments.* * * *

(e) *Instruments utilizing a power supply.* Each required flight instrument utilizing a power supply shall be provided with two independent sources of power, a means of selecting either power source, and a means of indicating the adequacy of the power being supplied to the instrument. The installation and power supply system shall be such that failure of one instrument, or of the energy supply from one source, or a fault in any part of the power distribution system, will not interfere with the proper supply of energy from the other source. (See also §§ 4b.606 (c) and 4b.623.)

114. By amending § 4b.612 by adding a new paragraph (f) to read as follows:

§ 4b.612 *Flight and navigational instruments.* * * *

(f) *Duplicate instrument systems.* If duplicate sets of flight instruments are required by the Civil Air Regulations, each set shall be provided with a completely independent operating system. Additional instruments shall not be connected to the first pilot system. If additional instruments are connected to the other system, provision shall be made to disconnect or isolate in flight such additional instruments.

115. By rescinding § 4b.613 (e).

116. By rescinding §§ 4b.620 through 4b.628 and inserting in lieu thereof new §§ 4b.620 through 4b.627 to read as follows:

§ 4b.620 *General.* The provisions of §§ 4b.621 through 4b.627 shall apply to all electrical systems and equipment. (See also § 4b.606.)

§ 4b.621 *Electrical system capacity.* The required generating capacity and the number and type of power sources shall be determined by an electrical load analysis and shall comply with § 4b.606 (c).

§ 4b.622 *Generating system.* (a) The generating system shall be considered to include electrical power sources, main power busses, transmission cables, and associated control, regulation, and protective devices.

(b) The generating system shall be so designed that the power sources function properly both when connected in combination and independently, and the failure or malfunctioning of any power source cannot create a hazard or impair the ability of the remaining sources to supply essential loads.

(c) Means accessible in flight to appropriate crew members shall be provided for the individual and collective disconnection of electrical power sources from the main bus.

(d) Means shall be provided to indicate to appropriate crew members those generating system quantities which are essential for the safe operation of the system.

NOTE: The voltage and current supplied by each generator are quantities considered essential.

§ 4b.623 *Distribution system.* (a) The distribution system shall be considered to include all distribution busses, their associated feeders, and control and protective devices.

(b) Individual distribution systems shall be designed to insure that essential load circuits can be supplied in the event of reasonably probable faults or open circuits.

(c) Where two independent sources of electrical power for particular equipment or systems are required by the Civil Air Regulations, their electrical energy supply shall be assured.

NOTE: Various means may be used to assure a supply, such as duplicate electrical equipment, throw-over switching, and multichannel or loop circuits separately routed.

§ 4b.624 *Electrical protection.* (a) Automatic protective devices shall be provided to minimize distress to the electrical system and hazard to the airplane in the event of wiring faults or serious malfunctioning of the system or connected equipment.

(b) In the generating system the protective and control devices shall be such as to de-energize and disconnect faulty power sources and power transmission equipment from their associated busses with sufficient rapidity to provide protection against hazardous overvoltage and other malfunctioning.

(c) All resettable type circuit protective devices shall be so designed that, when an overload or circuit fault exists, they will open the circuit irrespective of the position of the operating control.

(d) Protective devices or their controls used in essential load circuits shall be accessible for resetting in flight.

(e) Circuits for essential loads shall have individual circuit protection.

NOTE: This provision does not necessarily require individual protection for each circuit in an essential load system (e. g., each position light in the system).

(f) If fuses are used, there shall be provided spare fuses for use in flight equal to at least 50 percent of the number of fuses of each rating required for complete circuit protection.

§ 4b.625 *Electrical equipment and installation.* (a) In showing compliance with § 4b.606 (a) and (b) with respect to the electrical system, equipment, and installation, consideration shall be given to critical environmental conditions.

NOTE: Critical environmental conditions may include temperature, pressure, humidity, ventilation, position, acceleration, vibration, and presence of detrimental substances.

(b) All electrical equipment, controls, and wiring shall be so installed that operation of any one unit or system of units will not affect adversely the simultaneous operation of any other electrical unit or system of units essential to the safe operation of the airplane.

(c) Cables shall be grouped, routed, and spaced so that damage to essential circuits will be minimized in the event of faults in heavy current-carrying cables.

(d) Batteries and their installations shall provide for ventilation, drainage of fluids, venting of gases, and protection of other parts of the airplane from corrosive battery fluids.

§ 4b.626 *Electrical system fire and smoke protection.* The design and installation of all components of the electrical system shall be in compliance with pertinent fire and smoke protection provisions of §§ 4b.371(c), 4b.385, and 4b.490. In addition, all electrical cables, terminals, and equipment which are necessary in emergency procedures and which are located in designated fire zones shall be fire-resistant.

§ 4b.627 *Electrical system tests and analyses.* It shall be demonstrated by tests and analyses that the electrical system functions properly and without electrical or thermal distress.

117. By amending § 4b.641 to read as follows:

§ 4b.641 *Hand fire extinguishers.* (See §§ 4b.381, 4b.382, and 4b.383.)

118. By deleting the reference "§ 4b.19" in § 4b.643 and inserting in lieu thereof "§ 4b 18".

119. By amending § 4b.645 (a) to read as follows:

§ 4b.645 Emergency flotation and signaling equipment. * * *

(a) Rafts and life preservers shall be of an approved type.

120. By adding a new § 4b.646 to read as follows:

§ 4b.646 *Accessibility and identification of safety equipment.* Prescribed safety equipment to be used in emergencies shall be accessible in flight, and its method of operation shall be marked. If such equipment is carried in compartments or containers, the compartments or containers shall be marked to identify the contents to crew and passengers.

121. By amending § 4b.650 to read as follows:

§ 4b.650 *Radio and electronic equipment.* (a) In showing compliance with § 4b.606 (a) and (b) with respect to radio

and electronic equipment and their installations, consideration shall be given to critical environmental conditions.

NOTE: Critical environmental conditions may include temperature, pressure, humidity, ventilation, position, acceleration, vibration, and presence of detrimental substances.

(b) Radio and electronic equipment shall be supplied with power in accordance with the provisions of § 4b.623 (c).

(c) All radio and electronic equipment, controls, and wiring shall be so installed that operation of any one unit or system of units will not affect adversely the simultaneous operation of any other radio or electronic unit or system of units required by the Civil Air Regulations.

122. By amending § 4b.651 (d) by revising the parenthetical sentence at the end of the paragraph to read: "(For crew masks to be used for protective breathing purposes see paragraph (h) of this section.)"

123. By amending § 4b.651 by adding thereto new paragraphs (f), (g), and (h) to read as follows:

§ 4b.651 *Oxygen equipment and supply.* * * *

(f) *Fire protection.* (1) Oxygen equipment and lines shall not be located in any designated fire zone.

(2) Oxygen equipment and lines shall be protected from heat which may be generated in or escape from any designated fire zone.

(3) Oxygen equipment and lines shall be so installed that escaping oxygen cannot cause ignition of accumulations of grease, fluids, or vapors which are likely to be present in normal operation or as a result of failure or malfunctioning of any system.

(g) *Protection from rupture.* Oxygen pressure tanks and lines between tanks and the shutoff means shall be protected from the effects of unsafe temperatures, and shall be so located in the airplane as to minimize the possibility and the hazards of rupture in a crash landing.

(h) *Protective breathing equipment.* When protective breathing equipment is required by the Civil Air Regulations, it shall be designed to protect the flight crew from the effects of smoke, carbon dioxide, and other harmful gases. Such equipment shall include masks covering the eyes, nose, and mouth, or only the nose and mouth where accessory equipment is provided to protect the eyes. A supply of protective oxygen of not less than 300 liters STPD per person shall be provided when a demand type system is used. When a continuous flow system is used, it shall provide protection for 15 minutes at a minimum flow rate of 60 liters per minute STPD per person.

NOTE: STPD refers to the international standard for measurement of gases. This standard assumes temperature at 0° C., pressure at 760 mm. Hg., dry.

124. By rescinding § 4b.653.

125. By adding new §§ 4b.653 through 4b.655 to read as follows:

§ 4b.653 *Hydraulic systems; strength*—(a) *Structural loads.* All elements of the hydraulic system shall be designed to withstand, without detrimental permanent deformation, all structural loads which may be imposed simultaneously with the maximum hydraulic loads occurring in operation.

(b) *Proof pressure tests.* All elements of the hydraulic system shall be tested to a proof pressure of 1.5 times the maximum presure to which the part will be subjected in normal operation. In such test no part of the hydraulic system shall fail, malfunction, or suffer detrimental deformation.

(c) *Burst pressure strength.* Individual hydraulic system elements shall be designed to withstand pressures which are sufficiently increased over the pressures prescribed in paragraph (b) of this section to safeguard against rupture under service conditions.

NOTE: The following pressures, in terms of percentage of maximum operating pressure for the particular element, in most instances are sufficient to insure against rupture in service: 250 percent in units under oil pressure, 400 percent in units containing air and oil under pressure and in lines, hoses, and fittings, 300 percent in units of system subjected to back pressure.

§ 4b.654 *Hydraulic systems; design*—(a) *Pressure indication.* A means shall be provided to indicate the pressure in each main hydraulic power system.

(b) *Pressure limiting provisions.* Provision shall be made to assure that pressures in any part of the system will not exceed a safe limit above the maximum operating pressure of the system and to insure against excessive pressures resulting from fluid volumetric changes in all lines which are likely to remain closed long enough for such changes to take place. In addition, consideration shall be given to the possible occurrence of detrimental transient (surge) pressures during operation.

(c) *Installation.* Hydraulic lines, fittings, and components shall be installed and supported to prevent excessive vibration and to withstand inertia loads. All elements of the installation shall be protected from abrasion, corrosion, and mechanical damage.

(d) *Connections.* Flexible hose, or other means of providing flexibility, shall be used to connect points in a hydraulic fluid line between which there is relative motion or differential vibration.

§ 4b.655 *Hydraulic system fire protection.* When flammable type hydraulic fluid is used, the hydraulic system shall comply with the provisions of §§ 4b.385, 4b.481, 4b.482, and 4b.483.

Part 4b last printed July 20, 1950

126. By adding a new § 4b.658 to read as follows:

§ 4b.658 *Vacuum systems.* (a) Means, in addition to the normal pressure relief, shall be provided to relieve automatically the pressure in the discharge lines from the vacuum pump, if the delivery temperature of the air reaches an unsafe value.

(b) Vacuum system lines and fittings on the discharge side of the pump which might contain flammable vapors or fluids shall comply with § 4b.483 if they are located in a designated fire zone. Other vacuum system components located in designated fire zones shall be fire-resistant.

127. By adding a new § 4b.718 (a) (5) to read as follows:

§ 4b.718 *Powerplant limitations.* * * *

(a) *Take-off operation.* * * *

(5) Maximum cylinder head or coolant outlet and oil temperatures, if these differ from the maximum limits for continuous operation.

128. By adding a new § 4b.718 (d) to read as follows:

§ 4b.718 *Powerplant limitations.* * * *

(d) *Cooling limitations.* The maximum sea level temperature for which satisfactory cooling has been demonstrated.

129. By adding a new § 4b.734 (d) to read as follows:

§ 4b.734 *Powerplant instruments; general.* * * *

(d) Engine or propeller speed ranges which are restricted because of excessive vibration stresses shall be marked with red arcs.

130. By amending § 4b.737 (c) (2) to read as follows:

§ 4b.737 *Control markings; general.* * * *

(c) *Accessory and auxiliary controls.* * * *

(2) Emergency controls, including fuel jettisoning and fluid shutoff controls, shall be colored red and shall be marked to indicate their function and method of operation.

131. By amending § 4b.738 (c) to read as follows:

§ 4b.738 *Miscellaneous markings and placards.* * * *

(c) *Emergency exit placards.* (See § 4b.362 (f).)

(Sec. 205, 52 Stat. 984; 49 U. S. C. 425. Interpret or apply secs. 601, 603, 52 Stat. 1007, 1009; 49 U. S. C. 551, 553)

By the Civil Aeronautics Board.

[SEAL] M. C. MULLIGAN,
Secretary.

[F. R. Doc. 52-1421; Filed, Feb. 4, 1952; 8:51 a. m.]

☆ U. S. GOVERNMENT PRINTING OFFICE: 1952 O - 988035