DOT LIBRARY
10A SECTION
800 INDEPENDENCE AVE SW
WASHINGTON, DC 20591

CIVIL AERONAUTICS BOARD
WASHINGTON, D. C.

DOT LIBRARY
10A SECTION
800 INDEPENDENCE AVE SW
WASHINGTON, DC 20591

CIVIL AIR REGULATIONS AMENDMENT 03-0
Effective: November 13, 1945

PART 03

AIRPLANE AIRWORTHINESS

NORMAL, UTILITY, ACROBATIC, AND RESTRICTED PURPOSE CATEGORIES

Sec.		Page
03.0	Scope	2
03.00	Date of effectiveness	2
03.01	Airplane categories	2
03.02	Airworthiness certificates	3
03.03	Type certificates	4
03.04	Changes	4
03.07	Definitions	5
03.1	Flight requirements	9
03.10	General	9
03.11	Weight and balance	9
03.12	Performance	11
03.13	Flight characteristics	13
03.14	Ground and water characteristics	20
03.15	Flutter and vibration	21
03.2	Strength requirements	22
03.20	General	22
03.21	Flight loads	22
03.22	Control surface loads	29
03.23	Control system loads	41
03.24	Ground loads	44
03.25	Water loads	49
03.3	Design and construction	55
03.30	General	55
03.31	Structural parts	55
03.32	Flutter and vibration prevention measures	57
03.33	Wings	57
03.34	Control surfaces (fixed and movable)	58
03.35	Control systems	58
03.36	Landing gear	61
03.37	Hulls and floats	64
03.38	Fuselage	65
03.39	Miscellaneous	69
03.4	Power plant installation - Reciprocating engines	70
03.40	General	70
03.41	Engines and propellers	70
03.42	Fuel system	72
03.43	Oil system	79
03.44	Cooling	81
03.45	Induction system	85
03.46	Exhaust system	86
03.47	Firewall and cowling	87
03.48	Power plant controls and accessories	88
03.49	Power plant fire protection	89
03.5	Equipment	90
03.50	General	90
03.51	Required basic equipment	90
03.52	Instruments - installation	90
03.53	Electrical systems and equipment - installation	93
03.54	Safety equipment - installation	96
03.55	Radio equipment - installation	97
03.56	Miscellaneous equipment - installation	97
03.6	Operating limitations and information	98
03.60	Limitations	98
03.61	Markings and placards	9
03.62	Approved Operating Limitations	10
03.7	Identification data	105
03.70	Nameplate	105
03.71	Airworthiness certificate number	105

Figures:

Fig. 03-1	Flight Envelopes - Load Factor vs Velocity (V-n) Diagram	24
Fig. 03-2	Limit Maneuvering Load Factors	25
Fig. 03-3(a)	Limit Average Maneuvering Control Surface Loadings	30
Fig. 03-3(b)	Limit Average Maneuvering Control Surface Loadings	31
Fig. 03-4	Maneuvering Tail Load Increment	32
Fig. 03-5(a)	Gust Loadings on Horizontal Tail Surface	33
Fig. 03-5(b)	Gust Loadings on Horizontal Tail Surface	34
Fig. 03-6	Gust Loadings on Vertical Tail Surface	35
Fig. 03-7	Control Surface Load Distribution	36
Fig. 03-8	Control Surface Load Distribution	36
Fig. 03-9	Control Surface Load Distribution	36
Fig. 03-10	Control Surface Load Distribution	36
Fig. 03-11	Pilot Control Force Limits	43
Fig. 03-12(a)	Basic Landing Conditions	46
Fig. 03-12(b)	Basic Landing Conditions	47
Fig. 03-13	Distribution of Local Pressures - Boat Seaplanes	51
Fig. 03-14	Cockpit Controls	66
Fig. 03-15	Representative Instrument Markings	100

03.0 Scope. An airplane shall be shown to comply with the airworthiness requirements set forth in this Part and shall have no characteristic which, according to the findings of the Administrator, makes the airplane unairworthy in order to become eligible for type and airworthiness certificates, provided that,

(a) If any of these requirements become inapplicable to a particular airplane because of increased knowledge of aeronautics or of the development of unforeseen design features, the Administrator shall accept designs shown to provide an equivalent standard of safety.

(b) Other requirements with respect to airworthiness found by the Administrator to provide an equivalent standard of safety shall be accepted in lieu of the requirements set forth in this Part.

03.00 Date of effectiveness. Airplanes certificated as a type on or after November 13, 1945, shall comply either with (1) the entire provisions of Part 04 of the CAR in effect immediately prior to November 9, 1945, or (2) the entire provisions prescribed herein except that airplanes certificated under (1) may incorporate provisions of (2) when the Administrator finds the standard of safety to be equivalent to the particular and all related items of the latter.

Airplanes certificated as a type on or after January 1, 1947, shall comply with the provisions contained herein. If the prototype is not flown prior to January 1, 1947, and satisfactory evidence is presented indicating that the design work of the type was well advanced prior to November 13, 1945, and the delay of completion of the airplane was due to causes beyond the manufacturer's control, the Administrator may certificate the airplane as a type under the provisions of Part 04 which were in effect prior to November 9, 1945.

Unless otherwise specified, compliance with an amendment to this Part shall be mandatory only for airplanes for which application for a type certificate has been received subsequent to the effective date of such amendment.

03.01 Airplane categories. In this Part airplanes are divided upon the basis of their intended operation into the following categories for the purposes of certification:

Normal — Suffix "N"

Airplanes in this category are intended for non-acrobatic, non-scheduled passenger, and non-scheduled cargo operation.

Utility — Suffix "U"

Airplanes in this category are intended for normal operations and limited acrobatic maneuvers. These airplanes are not suited for use in snap or inverted maneuvers.

Acrobatic — Suffix "A"

Airplanes in this category will have no specific restrictions as to type of maneuver permitted unless the necessity therefor is disclosed by the required flight tests.

Restricted Purpose — Suffix "R"

Airplanes in this category are intended to be operated for restricted purposes not logically encompassed by the foregoing categories. The requirements of this category shall consist of all of the provisions for any one of the foregoing categories which are not rendered inapplicable by the nature of the special purpose involved, plus suitable operating restrictions which the Administrator finds will provide a level of safety equivalent to that contemplated for the foregoing categories.

An airplane may be certificated under the requirements of a particular category, or in more than one category, provided that all of the requirements of such categories are met. Sections of this Part which apply to only one or more, but not all, categories are identified in this Part by the appropriate suffixes as indicated above, added to the section number. All sections not identified by a suffix are applicable to all categories except as otherwise specified.

03.02 Airworthiness certificates. Airworthiness certificates are classified as follows:

(a) NC certificates. In order to become eligible for an NC certificate, an airplane must be shown to comply with all of the requirements contained in this Part for at least one category, but not the restricted purpose category.

(b) NR certificates. In order to become eligible for an NR certificate, an airplane must be shown to comply with all of the requirements of the restricted purpose category.

(c) NX certificates. An airplane will become eligible for an NX certificate when the applicant presents satisfactory evidence that the airplane is to be flown for experimental purposes and the Administrator finds it may, with appropriate restrictions, be operated for that purpose in a manner which does not endanger the general public. Airplanes used in racing and exhibition flying may be issued NX certificates under the terms of this section. The applicant shall submit sufficient data such as photographs to identify the airplane satisfactorily and, upon inspection of the airplane, any pertinent information found necessary by the Administrator to safeguard the general public.

An airplane manufactured in accordance with a type certificate (See § 03.03) and conforming with the type design will become eligible for an airworthiness certificate when, upon inspection of the airplane, the Administrator determines it so to conform and that the airplane is in a condition for safe operation. For each newly manufactured airplane this determination shall include a flight check by the applicant.

03.03 Type certificates. A type certificate will be issued when the following requirements are met:

03.031 Data required for NC and NR certification. The applicant for a type certificate shall submit to the Administrator the following:

Such descriptive data, test reports, and computations as are necessary to demonstrate that the airplane complies with the airworthiness requirements. The descriptive data shall be known as the type design and shall consist of drawings and specifications disclosing the configuration of the airplane and all design features covered in the airworthiness requirements as well as sufficient information on dimensions, materials, and processes to define the strength of the structure. The type design shall describe the airplane in sufficient detail to permit the airworthiness of subsequent airplanes of the same type to be determined by comparison with the type design.

03.032 Inspection and tests for NC and NR certification. The authorized representatives of the Administrator shall have access to the airplane and may witness or conduct such inspections and tests as are necessary to determine compliance with the airworthiness requirements.

03.0320 Inspection. Inspections and tests shall include all those found necessary by the Administrator to insure that the airplane conforms with the following:

(a) All materials and products are in accordance with the specification given in the type design.

(b) All parts of the airplane are constructed in accordance with the drawings contained in the type design.

(c) All manufacturing processes, construction, and assembly are such that the design strength and safety contemplated by the type design will be realized in service.

03.0321 Flight tests. Upon satisfactory completion of all necessary inspection and testing on the ground, and upon receipt from the applicant of a report of flight tests conducted by him, and satisfactory proof of the conformity of the airplane with the type design, such official flight tests as the Administrator finds necessary to prove compliance with this Part shall be conducted.

03.04 Changes. Changes shall be substantiated to demonstrate compliance of the airplane with the appropriate airworthiness requirements in effect when the particular airplane was certificated as a type unless the applicant chooses to show compliance with the currently effective requirements subject to the approval of the Administrator, or unless the Administrator finds it necessary to require compliance with current airworthiness requirements.

03.040 Minor changes. Minor changes to certificated airplanes which obviously do not impair the condition of the airplane for safe operation shall be approved by the authorized representatives of the Administrator prior to the submittal to the Administrator of any required revised drawings.

03.041 Major changes. A major change is any change not covered by minor changes as defined in § 03.040, Minor changes.

03.042 Service experience changes. When the Administrator finds that service experience indicates the need for design changes, the applicant shall submit for the approval of the Administrator engineering data describing and substantiating the necessary changes. The Administrator may in such cases withhold issuance of airworthiness certificates for additional airplanes of the type involved until satisfactory corrective measures have been taken. Upon approval by the Administrator, these changes shall be considered as a part of the type design, and descriptive data covering these changes shall be furnished by the applicant to all aircraft owners concerned.

03.0420 In the case of airplanes approved as a type under the terms of earlier airworthiness requirements, the Administrator may require that an airplane submitted for an original airworthiness certificate comply with such portions of the currently effective airworthiness requirements as may be necessary for safety.

03.07 Definitions.

03.070 General.

03.0701 Standard atmosphere. The standard atmosphere shall be based upon the following assumptions:

(a) The air is a dry perfect gas.
(b) The temperature at sea level is 59°F.
(c) The pressure at sea level is 29.92 inches Hg.
(d) The temperature gradient from sea level to the altitude at which the temperature becomes -67°F is -0.003566°F/Ft. and zero thereabove.
(e) The density, ρ_o, at sea level under the above conditions is 0.002378 lbs. Sec.^{2}/Ft.^{4}.

03.0702 Hot day condition. See § 03.4400.

03.0703 Airplane configuration. This term refers to the position of the various elements affecting the aerodynamic characteristics of the airplane, such as landing gear, flaps, etc.

03.071 Weights.

	Reference Sections
Empty weight. The actual weight used as a basis for determining operating weights.	§ 03.112
Maximum weight. The maximum weight at which the airplane may operate in accordance with the airworthiness requirements.	§ 03.113
Minimum weight. The minimum weight at which compliance with the airworthiness requirements is demonstrated.	§ 03.114
Maximum design weight. The maximum weight used for the structural design of the airplane.	§ 03.210
Minimum design weight. The minimum weight condition investigated in the structural flight load conditions, not greater than the minimum weight specified in § 03.114, Minimum Weight.	§ 03.210
Design landing weight. The weight used in the structural investigation of the airplane for normal landing conditions. Under the provisions of § 03.240, this weight may be equal to or less than the maximum design weight.	§ 03.240

Unit weights for design purposes.

Gasoline	6 lbs. per U. S. gallon
Lubricating oil	7.5 lbs. per U. S. gallon
Crew and Passengers	170 lbs. per person

03.072 Power.

One horsepower 33,000 ft. lbs. per minute

Take-off power. The take-off rating of the engine established in accordance with Part 13, "Aircraft Engine Airworthiness."

Maximum continuous power. The maximum continuous rating of the engine established in accordance with Part 13, "Aircraft Engine Airworthiness."

03.073 Speeds.

Reference Sections

V_t True airspeed of the airplane relative to the undisturbed air.

In the following symbols having subscripts, V denotes:

(a) "Equivalent" airspeed for structural design purposes equal to $V_t \sqrt{\rho/\rho_o}$

(b) "True indicated" or "calibrated" airspeed for performance and operating purposes equal to indicator reading corrected for position and instrument errors.

		Reference Sections
V_{s_o}	stalling speed, in the landing configuration	§ 03.121
V_{s_1}	stalling speed in the configurations specified for particular conditions	§ 03.121
V_x	speed for best angle of climb	
V_y	speed for best rate of climb	
V_{mc}	minimum control speed	§ 03.1312
V_{s_f}	computed stalling speed at design landing weight with flaps fully deflected	§ 03.212
V_f	design speed for flight load conditions with flaps in landing position	§ 03.212
V_p	design maneuvering speed	§ 03.2110
V_c	design cruising speed	§ 03.2110
V_d	design dive speed	§ 03.2110
V_{ne}	never exceed speed	§ 03.6001
Maximum structural cruising speed.		§ 03.6002

03.074 Structural terms.

Structure. Those portions of the airplane the failure of which would serious endanger the safety of the airplane.

Design wing area, S. The area enclosed by the wing outline (including ailerons, and flaps in the retracted position, but ignoring fillets and fairings) on a surface containing the wing chords. The outline is assumed to extend through the nacelles and fuselage to the plane of symmetry.

Aerodynamic coefficients, C_L, C_N, C_M, etc., used herein, are non-dimensional coefficients for the forces and moments acting on an airfoil, and correspond to those adopted by the U. S. National Advisory Committee for Aeronautics.

C_L = airfoil lift coefficient

C_N = airfoil normal force coefficient (normal to wing chord line)

C_{NA} = airplane normal force coefficient (based on lift of complete airplane and design wing area)

C_{M} = pitching moment coefficient

	Reference Sections
Loads.	
Limit load. The maximum load anticipated in service.	§ 03.200
Ultimate load. The maximum load which a part of structure must be capable of supporting.	§ 03.202
Factor of Safety. The factor by which the limit load must be multiplied to establish the ultimate load.	§ 03.201
Load factor or acceleration factor, n The ratio of the force acting on a mass to the weight of the mass. When the force in question represents the net external load acting on the airplane in a given direction, n represents the acceleration in that direction in terms of the gravitational constant.	
Limit load factor. The load factor corresponding to limit load	
Ultimate load factor. The load factor corresponding to ultimate load.	

03.110 Use of ballast. Removable ballast may be used to enable airplanes to comply with the flight requirements in accordance with the following provisions:

03.1100 The place or places for carrying ballast shall be properly designed, installed, and plainly marked as specified in § 03.6120.

03.1101 The airplane Approved Operating Limitations shall include instructions regarding the proper disposition of the removable ballast under all loading conditions for which such ballast is necessary, as specified in § 03.61.

03.112 Empty weight. The empty weight and corresponding center of gravity location shall include all fixed ballast, the unusable fuel supply (see § 03.4221), undrainable oil, full engine coolant, and hydraulic fluid. The weight and location of items of equipment installed when the airplane is weighed shall be noted in the Approved Operating Limitations.

03.113 Maximum weight. The maximum weight shall not exceed any of the following:

(a) the weight selected by the applicant,
(b) the design weight for which the structure has been proven,
(c) the maximum weight at which compliance with all of the requirements specified is demonstrated, and shall not be less than the sum of the weights of the following:

(1) the empty weight as defined by § 03.112,
(2) one gallon of usable fuel (see § 03.4221) for every 7 maximum continuous horsepower for which the airplane is certificated,
(3) the full oil capacity,
(4) 170 lbs. in all seats (normal category) or 190 lbs. in all seats (utility and acrobatic category) unless placarded otherwise.

03.114 Minimum weight. The minimum weight shall not exceed the sum of the weights of the following:

(a) the empty weight as defined by § 03.112,
(b) the minimum crew necessary to operate the airplane (170 lbs. for each crew member),
(c) one gallon of usable fuel (see § 03.4221) for every 12 maximum continuous horsepower for which the airplane is certificated,
(d) either one gallon of oil for each 25 gallons of fuel specified in (c) or one gallon of oil for each 75 maximum continuous horsepower for which the airplane is certificated, whichever is greater.

03.115 Center of gravity position. If the center of gravity position under any possible loading condition between the maximum weight as specified in § 03.113 and the minimum weight as specified in § 03.114 lies beyond (1) the extremes selected by the applicant, or (2) the extremes for which the structure has been proven, or (3) the extremes for which compliance with all functional requirements were demonstrated, loading instructions

03.1 FLIGHT REQUIREMENTS

03.10 General.

03.100 Policy re proof of compliance. Compliance with the requirements specified in § 03.1 governing functional characteristics shall be demonstrated by suitable flight or other tests conducted upon an airplane of the type, or by calculations based upon the test data referred to above, provided that the results so obtained are substantially equal in accuracy to the results of direct testing. Compliance with each requirement must be provided at the critical combination of airplane weight and center of gravity position within the range of either for which certification is desired. Such compliance must be demonstrated by systematic investigation of all probable weight and center of gravity combinations or must be reasonably inferable from such as are investigated.

03.101 The applicant shall provide a person holding an appropriate pilot certificate to make the flight tests, but a designated representative of the Administrator may pilot the airplane in so far as that may be necessary for the determination of compliance with the airworthiness requirements.

03.102 Official type tests will be discontinued until corrective measures have been taken by the applicant when either:

(1) The applicant's test pilot is unable or unwilling to conduct any of the required flight tests; or,

(2) Items of non-compliance with requirements are found which may render additional test data meaningless or are of such nature as to make further testing unduly hazardous.

03.103 Adequate provisions shall be made for emergency egress and use of parachutes by members of the crew during the flight tests.

03.104 The applicant shall submit to the representative of the Administrator a report covering all computations and tests required in connection with calibration of instruments used for test purposes and correction of test results to standard atmospheric conditions. The representative of the Administrator will conduct any flight tests which he finds to be necessary in order to check the calibration and correction report.

03.11 Weight and balance. There shall be established, as a part of the type inspection, ranges of weight and center of gravity within which the airplane may be safely operated.

When low fuel adversely affects balance or stability, the airplane shall be so tested as to simulate the condition existing when the amount of usable fuel on board does not exceed one gallon for every 12 maximum continuous horsepower of the engine or engines installed.

shall be provided in the Approved Operating Limitations as specified in § 03.62.

03.12 Performance. The following items of performance shall be determined and the airplane shall comply with the corresponding requirements in the standard atmosphere and still air.

03.121 Definition of stalling speeds.

(a) V_{S_0} denotes the true indicated stalling speed, if obtainable, or the minimum steady flight speed at which the airplane is controllable, in miles per hour, with:

(1) engines idling, throttles closed (or not more than sufficient power for zero thrust),
(2) propellers in position normally used for take-off,
(3) landing gear extended,
(4) wing flaps in the landing position,
(5) cowl flaps closed,
(6) center of gravity in the most unfavorable position within the allowable landing range,
(7) the weight of the airplane equal to the weight in connection with which V_{S_0} is being used as a factor to determine a required performance.

(b) V_{S_1} denotes the true indicated stalling speed, if obtainable, otherwise the calculated value in miles per hour, with:

(1) engines idling, throttles closed (or not more than sufficient power for zero thrust),
(2) propellers in position normally used for take-off,
the airplane in all other respects (flaps, landing gear, etc.,) in the particular condition existing in the particular test in connection with which V_{S_1} is being used,
(3) the weight of the airplane equal to the weight in connection with which V_{S_1} is being used as a factor to determine a required performance.

These speeds shall be determined by flight tests using the procedure outlined in § 03.134 (a) and (b).

03.1210 Stalling speed. V_{S_0} at maximum weight shall not exceed 70 mph for (1) single-engine airplanes and (2) multi-engine airplanes with a maximum weight of not greater than 5,000 lbs. and which do not comply with the climb requirement of § 03.123 (b).

03.122 Take-off. The distance required to take off and climb over a 50 ft. obstacle shall be determined under the following conditions:

(a) most unfavorable combination of weight and center of gravity location,
(b) engines operating within the approved limitations,
(c) cowl flaps in the position normally used for take-off.

Upon obtaining a height of 50 ft. above the level take-off surface, the airplane shall have attained a speed of not less than 1.3 V_{S_1} unless a lower speed of not less than V_X plus 5 can be shown to be safe under all conditions, including turbulence and complete engine failure.

The distance so obtained, the type of surface from which made, and the pertinent information with respect to the cowl flap position, the use of flight path control devices and landing gear retraction system shall be entered in the Approved Operating Limitations. The take-off shall be made in such a manner that its reproduction shall not require an exceptional degree of skill on the part of the pilot or exceptionally favorable conditions.

03.123 Climb.

(a) Normal climb condition. The steady rate of climb at sea level shall be at least 300 feet per minute, and the steady angle of climb at least 1:12 for landplanes or 1:15 for seaplanes with:

(1) not more than maximum continuous power on all engines,
(2) landing gear fully retracted,
(3) wing flaps in take-off position,
(4) cowl flaps in the position used in cooling tests specified in § 03.44, Cooling.

(b) Except as stated in § 03.1210, all multi-engine airplanes shall have a steady rate of climb of at least 0.02 $V_{S_0}^2$ in feet per minute at an altitude of 5,000 feet with the critical engine inoperative and:

(1) the remaining engines operating at not more than maximum continuous power,
(2) the inoperative propeller in the minimum drag position,
(3) landing gear retracted,
(4) wing flaps in the most favorable position,
(5) cowl flaps in the position used in cooling tests specified in § 03.44, Cooling.

(c) Balked landing conditions. The steady angle of climb at sea level shall be at least 1:30 with:

(1) take-off power on all engines,
(2) landing gear extended,
(3) wing flaps in landing position.

If rapid retraction is possible with safety without loss of altitude and without requiring sudden changes of angle of attack or exceptional skill on the part of the pilot, wing flaps may be retracted.

03.124 Landing. The horizontal distance required to land and to come to a complete stop (to a speed of approximately 3 mph for seaplanes or float planes) from a point at a height of 50 ft. above the landing surface shall be determined as follows:

(a) Immediately prior to reaching the 50 ft. altitude, a steady gliding approach shall have been maintained, with a true indicated airspeed of at least 1.3 V_{S_0}.

(b) The landing shall be made in such a manner that there is no excessive vertical acceleration, no tendency to bounce, nose over, ground loop, porpoise or water loop, and in such a manner that its reproduction shall not require any exceptional degree of skill on the part of the pilot or exceptionally favorable conditions.

The distance so obtained, the type of landing surface on which made and the pertinent information with respect to cowl flap position, and the use of flight path control devices shall be entered in the Approved Operating Limitations.

03.13 Flight characteristics. The airplane shall meet the following requirements at all normally expected operating altitudes under all critical loading conditions within the range of center of gravity and, except as otherwise specified, at the maximum weight for which certification is sought, and there shall be no flight or operating characteristic which the Administrator finds will make the airplane unairworthy.

03.131 Controllability. The airplane shall be satisfactorily controllable and maneuverable during take-off, climb, level flight, dive, and landing with or without power. It shall be possible to make a smooth transition from one flight condition to another, including turns and slips, without requiring an exceptional degree of skill, alertness, or strength on the part of the pilot and without danger of exceeding the limit load factor under all conditions of operation probable for the type, including for multi-engine airplanes those conditions normally encountered in the event of sudden failure of any engine. Compliance with "strength of pilots" limits need not be demonstrated by quantitative tests unless the Administrator finds the condition to be marginal. In the latter case they shall not exceed maximum values found by the Administrator to be appropriate for the type but in no case shall they exceed the following limits:

	Type	Pitch	Roll	Yaw
(a) For temporary application	Stick	60	30	150
	Wheel	75 applied to rim	60	150
(b) For prolonged application		10	5	20

03.1310 Longitudinal control. The airplane shall be demonstrated to comply with the following requirements.

03.13100 It shall be possible at all speeds below V_X to pitch the nose downward so that the rate of increase in airspeed is satisfactory for prompt acceleration to V_X with:

(a) maximum continuous power on all engines, the airplane trimmed at V_X,
(b) power off, the airplane trimmed at 1.4 V_{S_1},
(c) wing flaps and landing gear both extended and retracted.

03.13101 During each of the controllability demonstrations outlined below, it shall not require a change in the trim control or the exertion of more control force than can be readily applied with one hand for a short period. Each maneuver shall be performed with the landing gear extended.

(a) (1) With power off, flaps retracted, and the airplane trimmed at 1.4 V_{S_1}, the flaps are to be extended as rapidly as possible while maintaining the airspeed at approximately 40% above the instantaneous value of the stalling speed.

(2) Repeat (a) (1) except start with flaps extended and the airplane trimmed at 1.4 V_{S_1}, then retract the flaps as rapidly as possible.

(3) Repeat (a) (2) except using maximum continuous power.

(b) (1) With power off, the flaps retracted, and the airplane trimmed at 1.4 V_{S_1}, apply take-off power quickly while maintaining the same airspeed.

(2) Repeat (b) (1) except with the flaps extended.

(c) With power off, flaps extended, and the airplane trimmed at 1.4 V_{S_1}, obtain and maintain airspeeds within the range of 1.1 V_{S_1} to 1.7 V_{S_1} or V_f, whichever is the lesser.

03.13102 It shall be possible without the use of exceptional piloting skill to maintain essentially level flight when flap retraction from any position is initiated during steady horizontal flight at 1.1 V_{S_1} with simultaneous application of not more than maximum continuous power.

03.1311 Lateral and directional control.

03.13110 It shall be possible with multi-engine airplanes to execute 15° banked turns with or against the inoperative engine from steady climb at V_Y for the condition with:

(a) maximum continuous power on the operating engines,
(b) rearmost center of gravity,
(c) landing gear retracted and extended,
(d) wing flaps in most favorable climb position,
(e) maximum weight.

03.13111 It shall be possible with multi-engine airplanes, while holding the wings level laterally within 5°, to execute sudden changes in heading in either direction without dangerous characteristics being encountered. This shall be demonstrated at V_Y up to heading changes of 15°, except that the heading change at which the rudder force corresponds to that specified in § 03.131 need not be exceeded, with:

(a) the critical engine inoperative,
(b) maximum continuous power on the operating engine(s),
(c) landing gear retracted and extended,
(d) wing flaps in the most favorable climb condition,
(e) the inoperative propeller in its minimum drag condition,
(f) the airplane center of gravity at its rearmost position.

03.1312 Minimum control speed. (V_{mc}) The minimum speed after recovery at which the airplane can be maintained in straight flight with zero yaw (or at the option of the applicant, with a bank not in excess of 5°) after any one engine is suddenly made inoperative during steady flight at that speed shall be determined and shall not exceed 1.3 V_{S1} with:

(a) take-off or maximum available power on all engines,
(b) rearmost center of gravity,
(c) flaps in take-off position,
(d) landing gear retracted.

In demonstrating this minimum speed, the rudder force required to maintain it shall not exceed forces specified in § 03.131, nor shall it be necessary to throttle the remaining engines. During recovery the airplane shall not assume any dangerous attitude, nor shall it require exceptional skill, strength, or alertness on the part of the pilot to prevent a change of heading in excess of 20° before recovery is complete.

03.131-A Controllability. It shall be demonstrated that acrobatic maneuvers may be performed readily and safely. Safe entry speeds shall be determined for these maneuvers.

03.132 Trim. The means used for trimming the airplane shall be such that after being trimmed and without further pressure upon or movement of either the primary control or its corresponding trim control by the pilot or the automatic pilot, the airplane will maintain:

(a) lateral and directional trim in level flight at a speed of 0.9 of the high speed in level flight or at V_C, if lower, with the landing gear and wing flaps retracted.
(b) longitudinal trim under the following conditions:

(1) during a climb with maximum continuous power at a speed between V_X and 1.4 V_{S1}, landing gear retracted, wing flaps both retracted and in the take-off position,

(2) during a glide with power off at a speed not in excess of 1.4 V_{S1}, landing gear extended, wing flaps both retracted and extended under the forward center of gravity position approved with the maximum authorized weight and under the most forward center of gravity position approved, regardless of weight,

(3) during level flight at any speed from V_X to 1.4 V_{S1} to 90% of the high speed, landing gear and wing flaps retracted.

In addition to the above, multi-engine airplanes shall comply with (c) below.

(c) longitudinal and directional trim at a speed between V_Y and 1.4 V_{S1}, during climbing flight with the critical of two or more engines inoperative, with:

(1) the other engine (s) operating at maximum continuous power,

(2) the landing gear retracted,

(3) wing flaps retracted.

03.133 Stability. The airplane shall be longitudinally, directionally, and laterally stable in accordance with the following sections. Suitable stability and control "feel" (static stability) may be required in other conditions normally encountered in service if flight tests show such stability to be necessary for safe operation.

03.1331 Static longitudinal stability. In the configurations outlined in § 03.13310 below, and with the airplane trimmed as indicated, the characteristics of the elevator control forces and friction shall be as described below.

(a) A pull shall be required to obtain and maintain speeds below the specified trim speed and a push to obtain and maintain speeds above the specified trim speed. This shall be so at any speed which can be obtained without excessive control force except that such speeds need not be greater than the appropriate maximum permissible speed or less than the minimum speed in steady unstalled flight.

(b) The airspeed shall return to within 10% of the original trim speed when the control force is slowly released from any speed within the limits defined in (a) above.

03.13310 Specific conditions. In conditions (a), (b), and (c) below, within the speeds specified, the stable slope of stick force versus speed curve shall be such that any substantial change in speed is clearly perceptible to the pilot through a resulting change in stick force. Instrumented stick force measurements need not be made when such slope is considered by control "free" to:

(1) be satisfactorily in compliance with adequate perceptibility defined above,

(2) be such that the maximum forces specified in § 03.131 are obviously not exceeded.

(a) Landing. The stick force curve shall have a stable slope and the stick force shall not exceed 40 lbs. at any speed between 1.1 V_{S_1} and 1.8 V_{S_1} with:

(1) wing flaps in the landing position,
(2) the landing gear extended,
(3) maximum weight,
(4) throttles closed on all engines,
(5) the airplane trimmed at 1.4 V_{S_1} with throttles closed.

(b) Climb. The stick force curve shall have a stable slope at all speeds between 1.2 V_{S_1} and 1.6 V_{S_1} with:

(1) wing flaps retracted,
(2) landing gear retracted,
(3) maximum weight,
(4) 75% of maximum continuous power,
(5) the airplane trimmed at 1.4 V_{S_1}.

(c) Cruising.

(1) Between 1.3 V_{S_1} and the maximum permissible speed, the stick force curve shall have a stable slope at all speeds obtainable with a stick force not in excess of 40 lbs. with:

(a) landing gear retracted,
(b) wing flaps retracted,
(c) maximum weight,
(d) 75% of maximum continuous power,
(e) the airplane trimmed for level flight with 75% of the maximum continuous power.

(2) Same as (1) above except that the landing gear shall be extended and the level flight trim speed need not be exceeded.

03.1332 Dynamic longitudinal stability. Any short period oscillation occurring between stalling speed and maximum permissible speed shall be heavily damped with the primary controls in (1) free, and (2) in a fixed position.

03.1333 Directional and lateral stability.

03.13330 Three control airplanes.

(a) The static directional stability, as shown by the tendency to recover from a skid with rudder free, shall be positive for all flap positions and symmetrical power conditions, and for all speeds from 1.2 V_{S_1} up to the maximum permissible speed.

(b) The static lateral stability as shown by the tendency to raise the low wing in a sideslip shall:

(1) be positive at the maximum permissible speed,
(2) not be negative at a speed equal to 1.2 V_{S1}.

(c) In straight steady sideslips (unaccelerated forward slips), the aileron and rudder control movements and forces shall be substantially proportional to the angle of sideslip and the factor of proportionality shall lie between satisfactory limits up to sideslip angles considered appropriate to the operation of the type. At greater angles, up to that at which the full rudder control is employed or a rudder pedal force of 150 lbs. is obtained, the rudder pedal forces shall not reverse and increased rudder deflection shall produce increased angles of sideslip.

Sufficient bank shall accompany sideslipping to indicate adequately any departure from steady unyawed flight.

(d) Any short period oscillation occurring between stalling speed and maximum permissible speed shall be heavily damped with the primary controls in (1) free, and (2) in a fixed position.

03.13331 Two (or simplified) control airplanes.

(a) The directional stability shall be shown to be adequate by demonstrating that the airplane in all configurations can be rapidly rolled from a 45° bank to a 45° bank in the opposite direction without exhibiting dangerous skidding characteristics.

(b) Lateral stability shall be shown to be adequate by demonstrating that the airplane will not assume a dangerous attitude or speed when all the controls are abandoned for a period of two minutes. This demonstration shall be made in moderately smooth air with the airplane trimmed for straight level flight at 0.9 V_h (or at V_c, if lower), flaps and gear retracted, and with rearward c.g. loading.

(c) Any short period oscillation occurring between the stalling speed and the maximum permissible speed shall be heavily damped with the primary controls in (1) free, and (2) in a fixed position.

03.134 Stalling. Stalls shall be demonstrated under two conditions:

(a) with power off,
(b) with the power setting not less than that required to show compliance with § 03.123(a).

In either condition it shall be possible, with flaps and landing gear in any position, center of gravity in the position least favorable for recovery, and with appropriate airplane weights for: (1) airplanes having independently controlled rolling and directional controls, to produce and to correct roll by unreversed use of the rolling control and to produce and correct yaw by unreversed use of the directional control during the maneuvers described below up to the time when the airplane pitches, (2) two-control airplanes having either interconnected lateral and directional controls or providing only one of these controls, it shall be possible to produce and to correct roll by unreversed use of the rolling control without producing excessive yaw during the maneuvers described below up to the time the airplane pitches.

During the recovery portions of the maneuver, pitch shall not exceed 30° below level, there shall be no loss of altitude in excess of 100 ft., and not more than 15° roll or yaw shall occur when controls are not used for one second after pitch starts and are used thereafter only in a normal manner.

Where clear and distinctive stall warning is apparent to the pilot at a speed at least 5% above the stalling speed with flaps and landing gear in any position, both in straight and turning flight, these requirements are modified as follows:

(1) It shall be possible to prevent more than 15° roll or yaw by the normal use of controls.

(2) Any loss of altitude in excess of 100 ft. or any pitch in excess of 30° below level shall be entered in the Approved Operating Limitations.

In demonstrating these qualities, the order of events shall be:

(a) With trim controls adjusted for straight flight at a speed of 1.4 V_{S1}, reduce speed by means of the elevator control until the speed is steady at slightly above stalling speed, then

(b) Pull elevator control back at a rate such that the airplane speed reduction does not exceed one mile per hour per second until a stall is produced as evidenced by an uncontrollable downward pitching motion of the airplane, or until the control reaches the stop. Normal use of the elevator control for recovery may be made after such pitching motion is unmistakably developed.

03.1341 Turning flight stalls. When stalled during a coordinated 30° banked turn with 75% maximum continuous power on all engines, flaps and landing gear retracted, it shall be possible to recover to normal level flight without encountering excessive loss of altitude, uncontrollable rolling characteristics, or uncontrollable spinning tendencies. These qualities shall be demonstrated by performing the following maneuver:

After a steady curvilinear level coordinated flight condition in a 30° bank is established and while maintaining the 30° bank, the airplane shall be stalled by steadily and progressively tightening the turn with the elevator control until the airplane is stalled or until the elevator has reached its stop. When the stall has fully developed, recovery to level flight shall be made with normal use of the controls.

03.1342 Stall test - one engine inoperative. Multi-engine airplanes shall not display any undue spinning tendency and shall be safely recoverable without applying power to the inoperative engine when stalled with:

(a) the critical engine inoperative,
(b) flaps and landing gear retracted,
(c) the remaining engines operating at up to 75% of maximum continuous power, except that the power need not be greater than that at which the use of maximum control travel does not hold the wings laterally level in approaching the stall. The operating engines may be throttled back during the recovery from the stall.

03.135-N Spinning. All airplanes of 4,000 lbs. or less maximum weight shall recover from a one-turn spin with controls assisted to the extent necessary to overcome friction in not more than one and one-half additional turns and without exceeding either the limiting airspeed or the limit positive maneuvering load factor for the airplane. It shall not be possible to obtain uncontrollable spins by means of any possible use of the controls. Compliance with the above shall be demonstrated at any permissible combination of weight and center of gravity positions obtainable with all or part of the designed useful load.

All airplanes in this category, regardless of weight, shall be placarded against spins or demonstrated to be "characteristically incapable of spinning" in which case they shall be so designated. (See § 03.1350-NU).

03.135-U Spinning. Airplanes in this category may comply either with the entire requirements of § 03.135-N or § 03.135-A.

03.135-A Spinning. All airplanes in this category must be capable of spinning and shall comply with the following:

At any permissible combination of weight and center of gravity position obtainable with all or part of the design useful load, the airplane shall recover from a six-turn spin with controls free in not more than four additional turns after releasing the controls. It shall be possible to recover at any point in the spinning described above by using the controls in a normal manner for that purpose in not more than one and one-half additional turns, and without exceeding either the limiting airspeed or the limit positive maneuvering load factor for the airplane. It shall not be possible to obtain uncontrollable spins by means of any possible use of the controls. If the airplane will not recover as prescribed with controls free but will recover with the controls assisted to the extent necessary to overcome friction, the airplane may be certificated with the rearmost center of gravity position 2% forward of the position used in the test.

03.1350-NU When it is desired to designate an airplane as a type "characteristically incapable of spinning," the flight tests to demonstrate this characteristic shall also be conducted with:

(a) a gross weight 5% in excess of the weight for which approval is desired,

(b) a center of gravity at least 3% aft of the rearmost position for which approval is desired,

(c) an available up elevator travel 4° in excess of that to which the elevator travel is to be limited by appropriate stops,

(d) an available rudder travel 7°, in either direction, in excess of that to which the rudder travel is to be limited by appropriate stops.

03.14 Ground and water characteristics. All airplanes shall comply with the following requirements.

03.141 Longitudinal stability and control. There shall be no uncontrollable tendency for landplanes to nose over in any operating condition reasonably expected for the type, or when rebound occurs during landing or take-off. Wheel brakes shall operate smoothly and shall exhibit no undue tendency to induce nosing over. Seaplanes shall exhibit no dangerous or uncontrollable porpoising at any speed at which the airplane is normally operated on the water.

03.142 Directional stability and control.

(a) There shall be no uncontrollable looping tendency in 90° crosswinds up to 0.2 V_{S_0} at any necessary speed upon the ground or water.

(b) All landplanes shall be demonstrated to be satisfactorily controllable with no exceptional degree of skill or alertness on the part of the pilot in power-off landings at normal landing speed and during which brakes or engine power are not used to maintain a straight path.

(c) Means shall be provided for adequate directional control during taxiing.

03.143 Shock absorption. The shock absorbing mechanism shall not produce damage to the structure when the airplane is taxied on the roughest ground which it is reasonable to expect the airplane to encounter in normal operation.

03.144 Spray characteristics. For seaplanes, spray during taxiing, take-off, and landing shall at no time dangerously obscure the vision of the pilots nor produce damage to the propeller or other parts of the airplane.

03.15 Flutter and vibration. All parts of the airplane shall be demonstrated to be free from flutter and excessive vibration under all speed and power conditions appropriate to the operation of the airplane up to at least the minimum value permitted for V_d in § 03.2110. There shall also be no buffeting condition in any normal flight condition severe enough to interfere with the satisfactory control of the airplane or to cause excessive fatigue to the crew or structural damage. However, buffeting as stall warning is considered desirable and discouragement of this type of buffeting is not intended.

03.2 STRENGTH REQUIREMENTS.

03.20 General.

03.200 Loads. Strength requirements are specified in terms of limit and ultimate loads. Limit loads are the maximum loads anticipated in service. Ultimate loads are equal to the limit loads multiplied by the factor of safety. When not otherwise described, loads specified are limit loads.

Unless otherwise provided, the specified air, ground, and water loads shall be placed in equilibrium with inertia forces, considering all items of mass in the airplane. All such loads shall be distributed in a manner closely approximating or conservatively representing actual conditions. If deflections under load would significantly change the distribution of external or internal loads, such redistribution shall be taken into account.

03.201 Factor of safety. The factor of safety shall be 1.5 unless otherwise specified.

03.202 Strength and deformations. The structure shall be capable of supporting limit loads without suffering detrimental permanent deformations. At all loads up to limit loads, the deformation shall be such as not to interfere with safe operation of the airplane. The structure shall be capable of supporting ultimate loads without failure for at least 3 seconds.

03.203 Proof of structure. Proof of compliance of the structure with the strength and deformation requirements of § 03.202 shall be made for all critical loading conditions. Proof of compliance by means of structural analysis will be accepted only when the structure conforms with types for which experience has shown such methods to be reliable. In all other cases substantiating load tests are required. In all cases certain portions of the structure must be tested as specified in § 03.3.

03.21 Flight loads.

03.210 General. Flight load requirements shall be complied with at critical altitudes within the range in which the airplane may be expected to operate and at all weights between the minimum design weight and the maximum design weight, with any practicable distribution of disposable load within prescribed operating limitations stated in § 03.62.

03.2101 Definition of flight load factor. The flight load factors specified represent the acceleration (in terms of the gravitational constant) normal to the assumed longitudinal axis of the airplane, equal in magnitude and opposite in direction to the airplane inertia load factor at the center of gravity.

03.211 Symmetrical flight conditions (flaps retracted). The strength requirements shall be met at all combinations of airspeed and load factor on and within the boundaries of the V-n diagram of Figure 03-1 which represents the envelope of the flight loading conditions specified by the maneuvering and gust criteria of § 03.2111 and § 03.2112. This diagram will also be used in determining the airplane structural operating limitations as specified in § 03.6.

03.2110 Design airspeeds. The design airspeeds shall be chosen by the designer except that they shall not be less than the following values:

V_c (design cruising speed)

$= 38 \sqrt{W/S}$ (N and U Categories)

$= 42 \sqrt{W/S}$ (A)

except that for values of W/S greater than 20, the above numerical multiplying factors may be decreased linearly with W/S to a value of 33 at W/S = 100, and further provided that the required minimum value need be no greater than 0.9 of the actual high speed of the airplane at sea level with maximum continuous power.

V_d (design dive speed)

$= 1.40\ V_{c_{min}}$ (N)

$= 1.50\ V_{c_{min}}$ (U)

$= 1.55\ V_{c_{min}}$ (A)

except that for values of W/S greater than 20, the above numerical multiplying factors may be decreased linearly with W/S to a value of 1.35 at W/S = 100. ($V_{c_{min}}$ is the required minimum value of design cruising speed specified above.)

V_p (design maneuvering speed)

$= V_s \sqrt{n}$ where:

V_s = computed stalling speed with flaps fully retracted at the design weight.

n = limit maneuvering load factor used in design.

"NOTE: POINT G NEED NOT BE INVESTIGATED WHEN SUPPLEMENTARY CONDITION #03.2141 IS INVESTIGATED

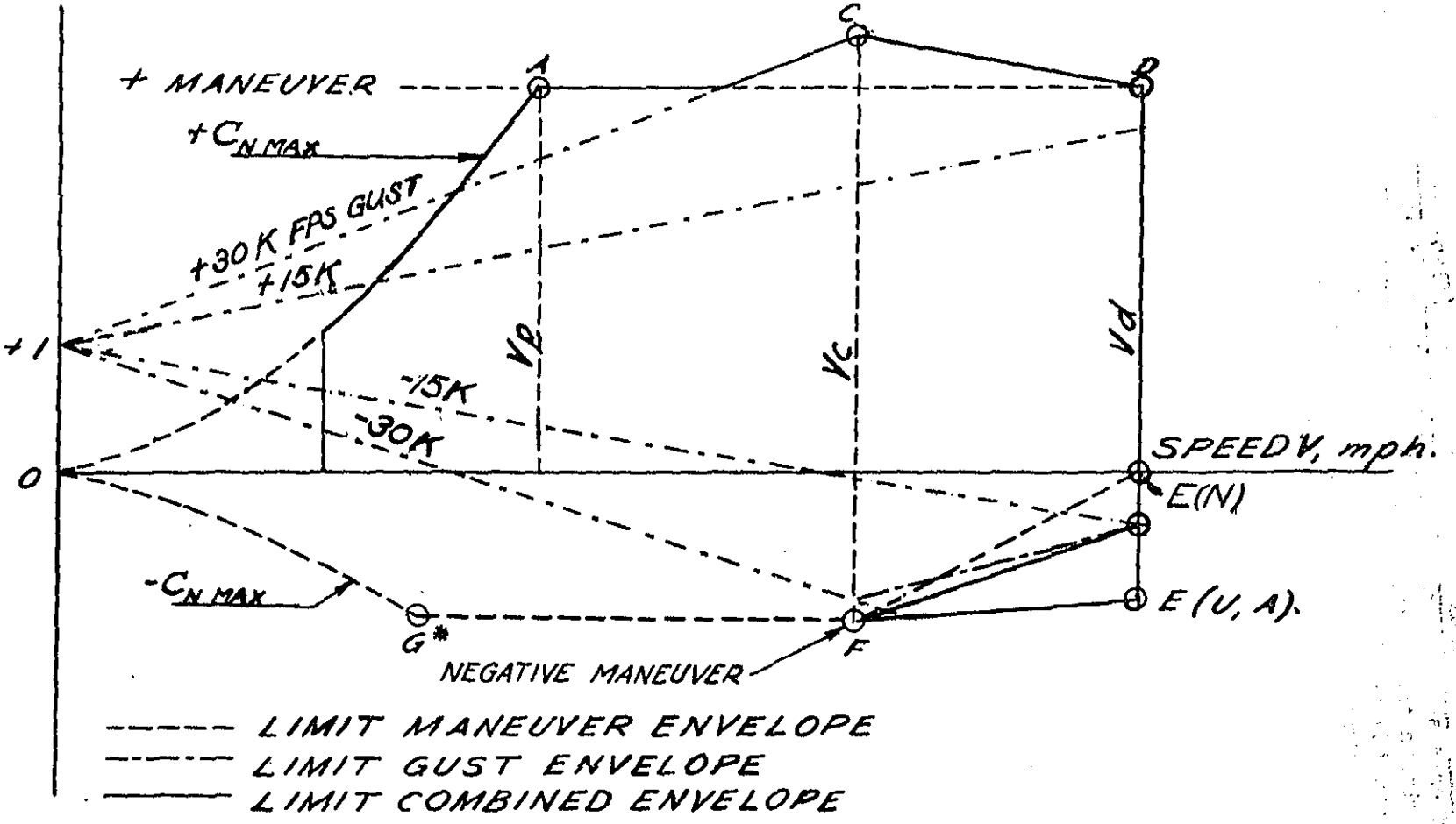

FLIGHT ENVELOPES (SEE 03.211)
LOAD FACTOR VS. VELOCITY (V-n) DIAGRAM

FIG 03-1

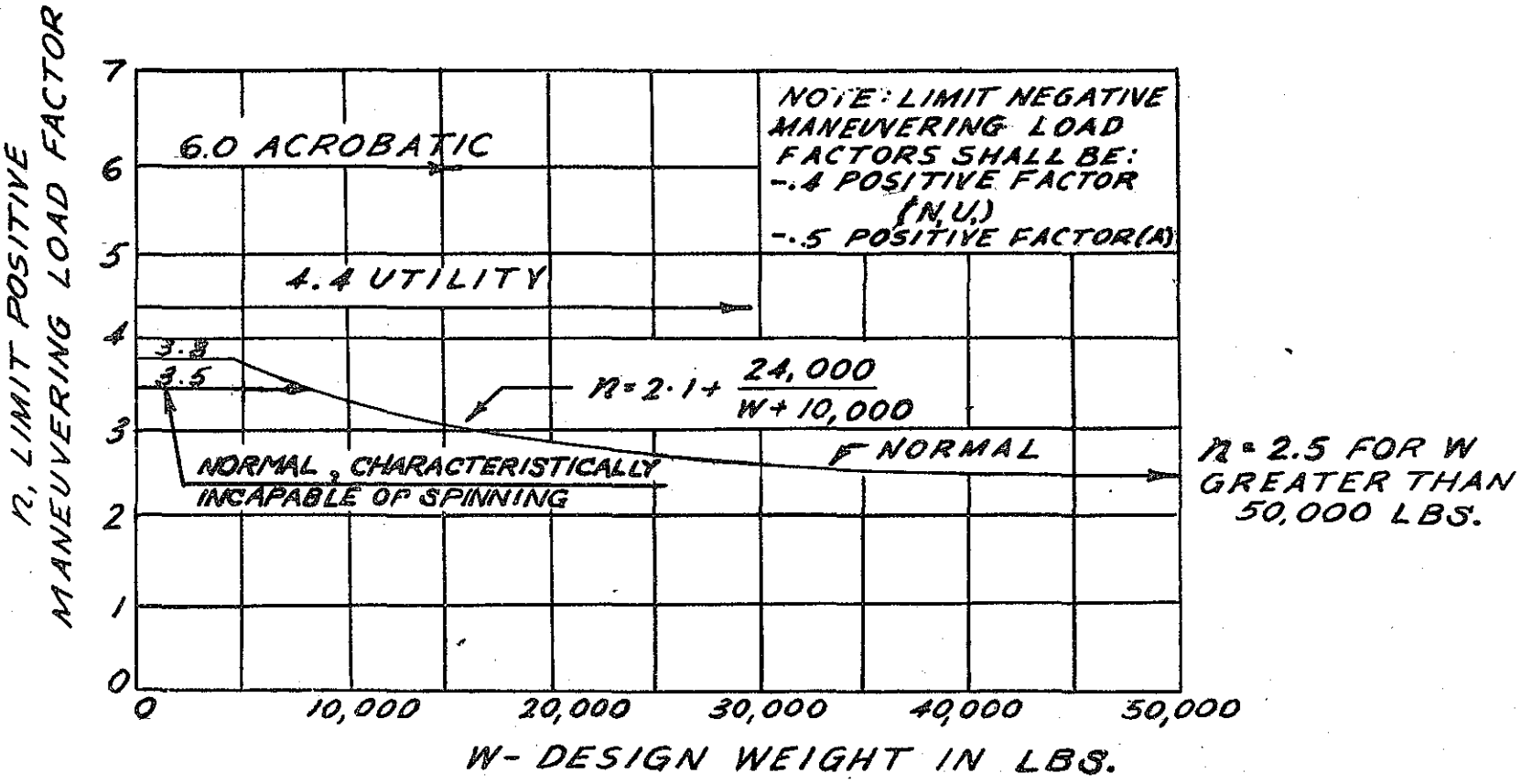

FIG 03-2 - LIMIT MANEUVERING LOAD FACTORS

03.2111 Maneuvering envelope. The airplane shall be assumed to be subjected to symmetrical maneuvers resulting in the following limit load factors except where limited by maximum (static) lift coefficients:

(a) the positive maneuvering load factor specified in § 03.21110 at all speeds up to V_d,

(b) the negative maneuvering load factor specified in § 03.21110 at speed V_c; and factors varying linearly with speed from the specified value at V_c to 0.0 at V_d for the N category and -1.0 at V_d for the A and U categories.

03.21110 Maneuvering load factors. The positive limit maneuvering load factors shall not be less than the following values (see Fig. 03-2):

	Category
$n = 2.1 + \frac{24{,}000}{W + 10{,}000}$ except that n need not be greater than 3.8 and shall not be less than 2.5. For airplanes certificated as characteristically incapable of spinning, n need not exceed 3.5.	(N)
$n = 4.4$	(U)
$n = 6.0$	(A)

The negative limit maneuvering load factors shall not be less than -0.4 times the positive load factor for the N and U categories, and shall not be less than -0.5 times the positive load factor for the A category.

Lower values of maneuvering load factor may be employed only if it be proven that the airplane embodies features of design which make it impossible to exceed such values in flight. (See also § 03.131)

03.2112 Gust envelope. The airplane shall be assumed to encounter symmetrical vertical gusts as specified below while in level flight and the resulting loads shall be considered limit loads:

(a) positive (up) and negative (down) gusts of 30 fps nominal intensity at all speeds up to V_c,

(b) positive and negative 15 fps gusts at V_d. Gust load factors shall be assumed to vary linearly between V_c and V_d.

03.21120 Gust load factors. In applying the gust requirements, the gust load factors shall be computed by the following formula:

$$n = 1 \pm \frac{K U V a}{575 (W/S)}$$

where: $K = \frac{1}{2}\left(\frac{W}{S}\right)^{\frac{1}{4}}$ (for $W/S < 16$ psf)

$$= 1.33 - \frac{2.67}{\left(\frac{W}{S}\right)^{\frac{3}{4}}} \quad \text{(for } W/S > 16 \text{ psf)}$$

U = nominal gust velocity, fps. (Note that the "effective sharp edged gust" equals KU)

V = airplane speed, mph

a = slope of lift curve, C_L per radian, corrected for aspect ratio

W/S = wing loading, psf

03.211 Airplane equilibrium. In determining the wing loads and linear inertia loads corresponding to any of the above specified flight conditions, the appropriate balancing horizontal tail load (see § 03.2211) shall be taken into account in a rational or conservative manner.

Incremental horizontal tail loads due to maneuvering and gusts (see § 03.2212 and § 03.2213) shall be reacted by angular inertia of the complete airplane in a rational or conservative manner.

C3.212 Flaps extended flight conditions. When flaps or similar high lift devices intended for use at the relatively low air speeds of approach, landing, and take-off are installed, the airplane shall be assumed to be subjected to symmetrical maneuvers and gusts with the flaps fully deflected at the design flap speed, V_f, resulting in limit load factors within the range determined by the following conditions:

(a) maneuvering to positive limit load factor of 2.0,

(b) positive and negative 15 fps gusts acting normal to the flight path in level flight. The gust load factors shall be computed by the formula of § 03.21120.

V_f shall be assumed not less than $1.4\ V_s$ or $1.8\ V_{sf}$, whichever is greater, where:

V_s = the computed stalling speed with flaps fully retracted at the design weight

V_{sf} = the computed stalling speed with flaps fully extended at the design weight.

In determining the external loads on the airplane as a whole, the thrust, slipstream, and pitching acceleration may be assumed equal to zero. In designing the flaps and supporting structure, slipstream effects must be taken into account as specified in § 03.224.

03.213 Unsymmetrical flight conditions. The airplane shall be assumed to be subjected to rolling and yawing maneuvers as described in the following conditions. Unbalanced aerodynamic moments about the center of gravity shall be reacted in a rational or conservative manner considering the principal masses furnishing the reacting inertia forces.

03.2131 Rolling conditions. The airplane shall be designed for (a) unsymmetrical wing loads appropriate to the category, and (b) the loads resulting from the aileron deflections and speeds specified in § 03.223, in combination with an airplane load factor of at least 2/3 of the positive maneuvering factor used in the design of the airplane.

NOTE: These conditions may be covered as noted below.

(a) Rolling accelerations may be obtained by modifying the symmetrical flight conditions shown on Figure 03-1 as follows:

Acrobatic category. In conditions A and F, assume 100% of the wing airload acting on one side of the plane of symmetry and 60% on the other.

Normal and utility categories. In condition A, assume 100% of the wing airload acting on one side of the airplane and 70% on the other. For airplanes over 1,000 lbs. design weight, the latter percentage may be increased linearly with weight up to 80% at 25,000 lbs.

(b) The effect of aileron displacement on wing torsion may be accounted for by adding the following increment to the basic airfoil moment coefficient over the aileron portion of the span in the critical condition as determined by the note under § 03.223.

$\Delta c_m = -.01\delta$ where:

Δc_m = moment coefficient increment

δ = down aileron deflection in degrees in critical condition

Only the wing and wing bracing need be investigated for this condition.

03.2132 Yawing conditions. The airplane shall be designed for the yawing loads resulting from the vertical surface loads specified in § 03.222.

03.214 Supplementary conditions.

03.2141 Special condition for rear lift truss. When a rear lift truss is employed, it shall be designed for conditions of reversed airflow at a design speed $V = 10\sqrt{W/S} + 10$ mph. As a limit condition,

a C_L value of -0.8 may be assumed and a linear downward acting pressure distribution peaking at the trailing edge and dropping off to zero at the leading edge may be used.

03.2142 Engine torque effects. Engine mounts and their supporting structures shall be designed for engine torque effects combined with certain basic flight conditions as described in (a) and (b) below. Engine torque may be neglected in the other flight conditions.

(a) The limit torque corresponding to take-off power and propeller speed acting simultaneuously with 75% of the limit loads from flight condition A. (See Figure 03-1)

(b) The limit torque corresponding to maximum continuous power and propeller speed, acting simultaneuously with the limit loads from flight condition A. (See Figure 03-1)

The limit torque shall be obtained by multiplying the mean torque by a factor of 1.33 in the case of engines having 5 or more cylinders. For 4, 3, and 2 cylinder engines, the factors shall be 2, 3, and 4 respectively.

03.2143 Side load on engine mount. The limit load factor in a lateral direction for this condition shall be at least equal to 1/3 of the limit load factor for flight condition A (see Figure 03-1) except that it shall not be less than 1.33. Engine mounts and their supporting structure shall be designed for this condition which may be assumed independent of other flight conditions.

03.22 Control surface loads.

03.220 General. The control surface loads specified in the following sections shall be assumed to occur in the symmetrical and unsymmetrical flight conditions as described in § 03.2113, § 03.212, and § 03.213. See Figures 03-3 to 03-10 for acceptable values of control surface loadings which are considered as conforming to the following detailed rational requirements.

03.2201 Pilot effort. In the control surface loading conditions described, the airloads on the movable surfaces and the corresponding deflections need not exceed those which could be obtained in flight by employing the maximum pilot control forces specified in Figure 03-11. In applying this criterion, proper consideration shall be given to the effects of servo mechanisms, tabs, and automatic pilot systems in assisting the pilot.

03.2202 Trim tab effects. The effects of trim tabs on the control surface design conditions need be taken into account only in cases where the surface loads are limited on the basis of maximum pilot effort. In such cases the tabs shall be considered to be deflected in the direction which would assist the pilot and the deflection shall correspond to the maximum expected degree of "out of trim" at the speed for the condition under consideration.

ACCEPTABLE VALUES OF LIMIT AVERAGE MANEUVERING CONTROL SURFACE LOADINGS CAN BE OBTAINED FROM FIGURE 03-3(b) AS FOLLOWS:

HORIZONTAL TAIL SURFACES.

(1) Condition § 03.2212(a): Obtain $\bar{W}$ as function of W/S and surface deflection;

Use Curve C for deflection 10° or less
Use Curve B for deflection 20°
Use Curve A for deflection 30° or more
(Interpolate for other deflections)
Use distribution of Figure 03-8

(2) Condition § 03.2212(b): Obtain $\bar{W}$ from curve B. Use distribution of Figure 03-8

VERTICAL TAIL SURFACES:

(3) Condition § 03.2221(a): Obtain $\bar{W}$ as function of W/S and surface deflection in same manner as outlined in (1) above, use distribution of Figure 03-8

(4) Condition § 03.2221(b): Obtain $\bar{W}$ from Curve C, use distribution of Figure 03-7

(5) Condition § 03.2221(c): Obtain $\bar{W}$ from Curve A, use distribution of Figure 03-9
(Note that condition § 03.2222 will generally be more critical than this condition)

AILERONS:

(6) In lieu of conditions (1), (2), and (3) of § 03.223, obtain $\bar{W}$ from Curve B, acting in both up and down directions. Use distribution of Figure 03-10

FIG. 03-3(a). LIMIT AVERAGE MANEUVERING CONTROL SURFACE LOADINGS, PSF

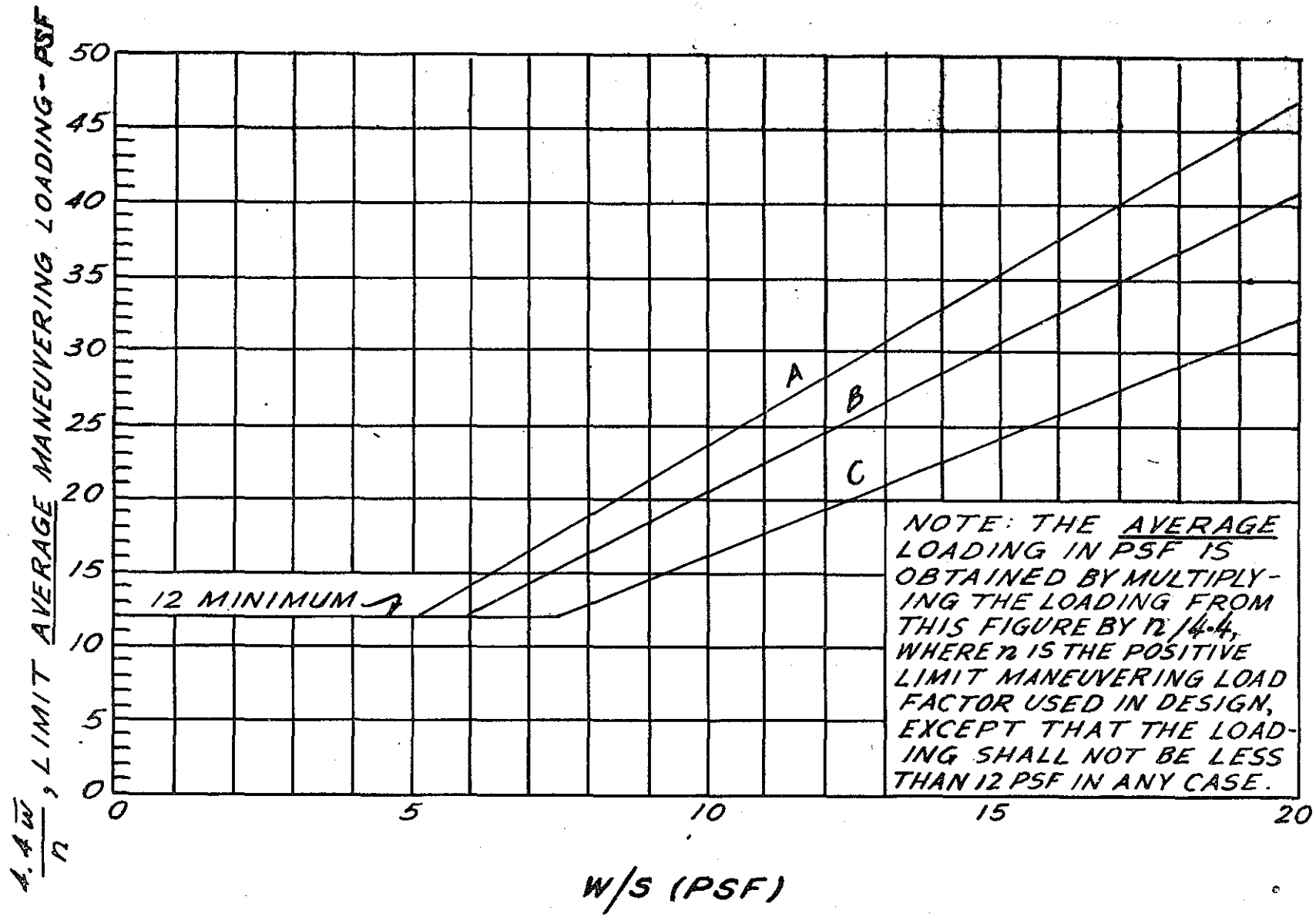

FIG. 03-3(6) - LIMIT AVERAGE MANEUVERING CONTROL SURFACE LOADINGS, PSF

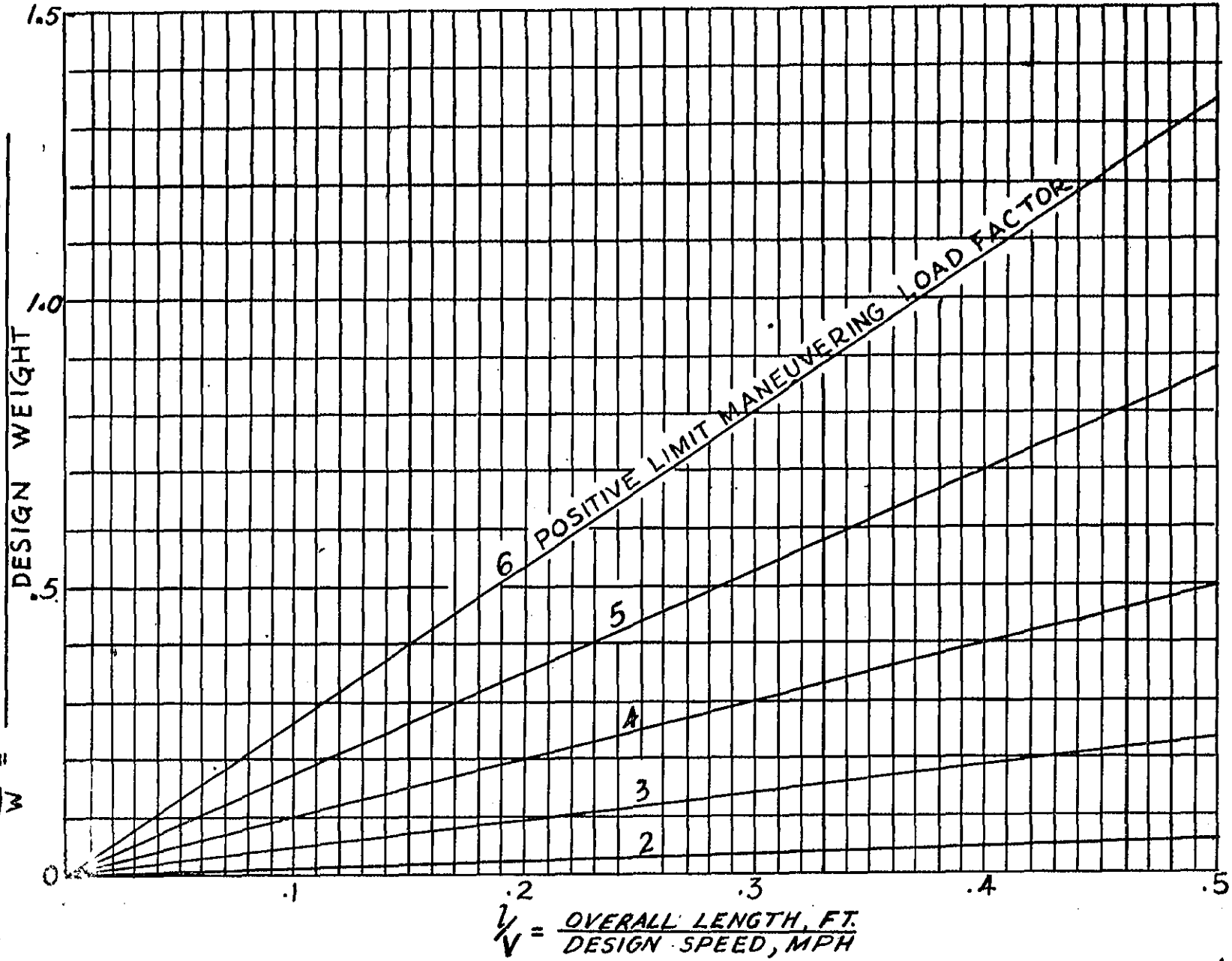

FIG. 03-4-MANEUVERING TAIL LOAD INCREMENT (REF. § 03.2212(C))

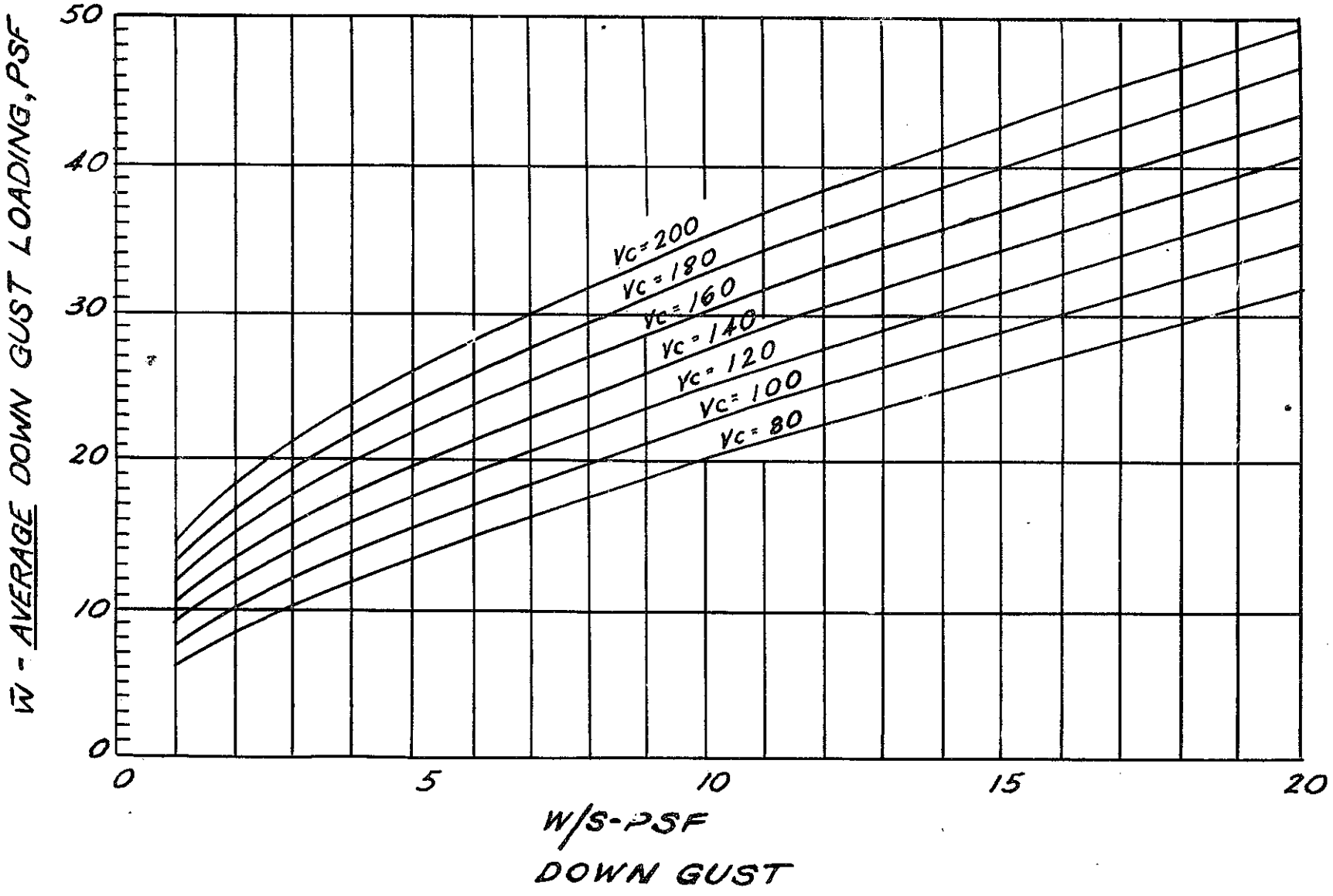

FIG. 03-5(a) - GUST LOADINGS ON HORIZONTAL TAIL SURFACE

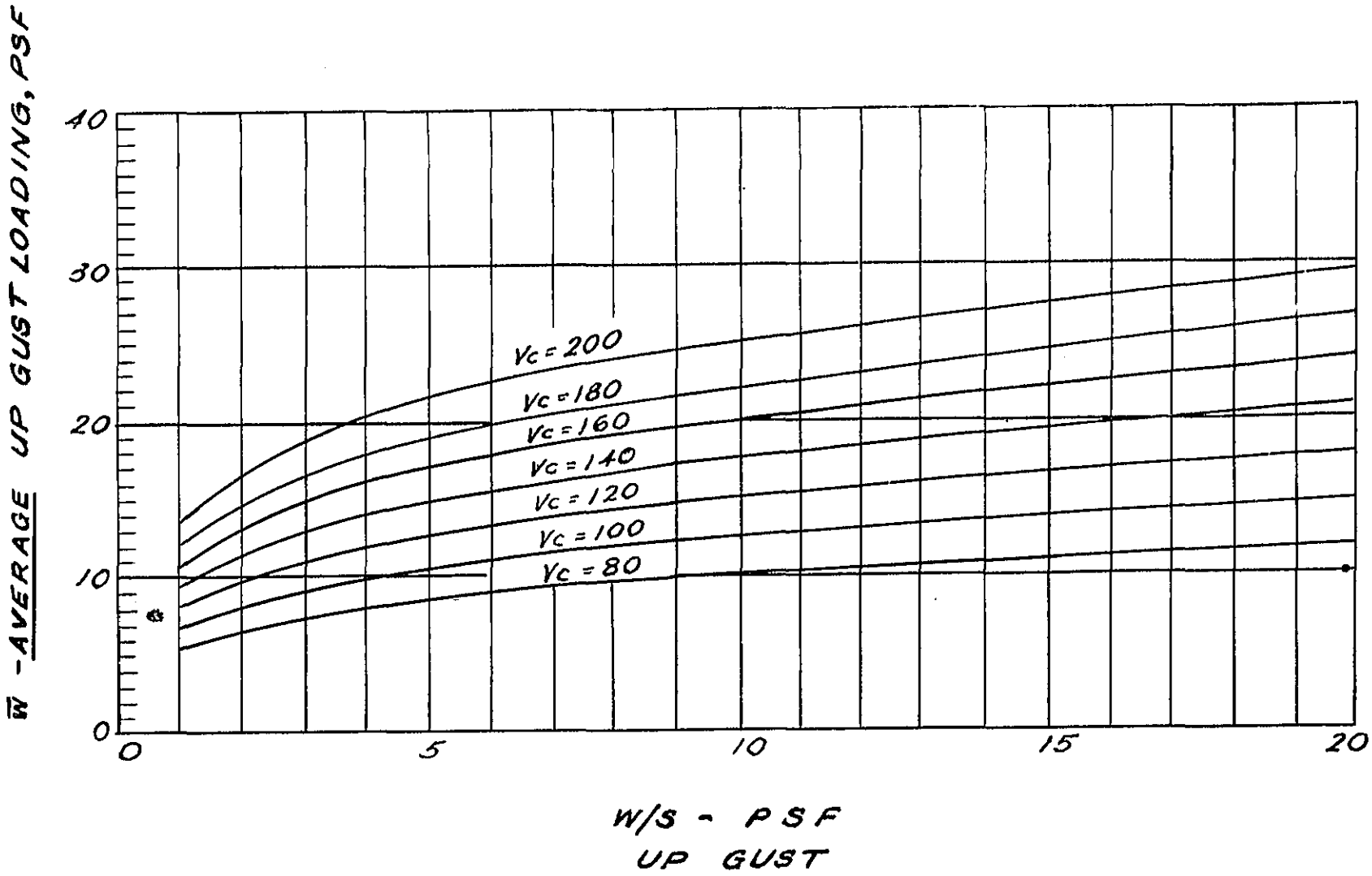

FIG. 03-5(b) - GUST LOADINGS ON HORIZONTAL TAIL SURFACE

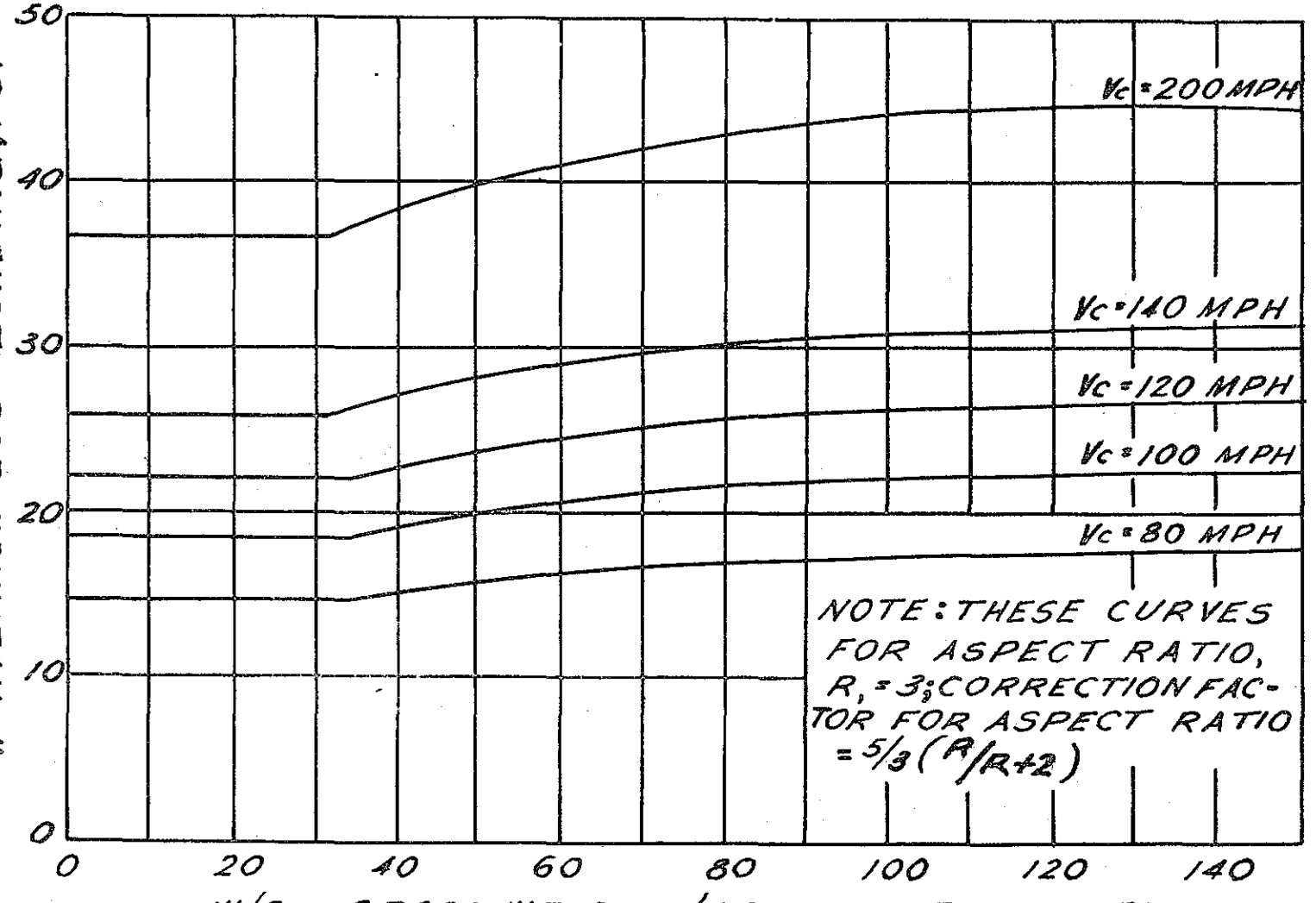

FIG. 03-6 - GUST LOADINGS ON VERTICAL TAIL SURFACE

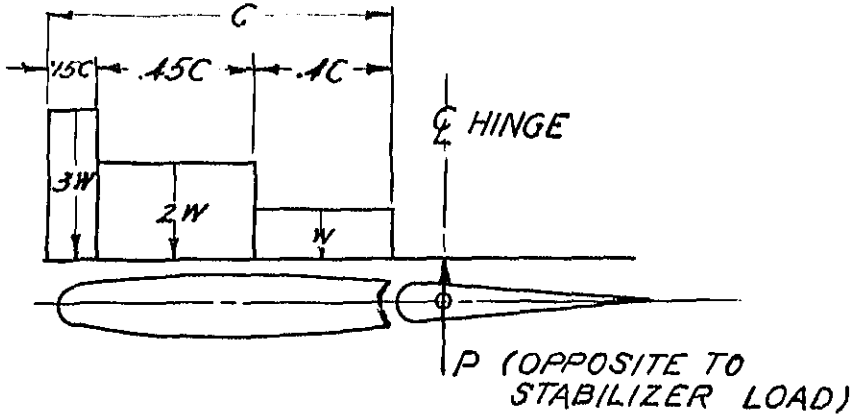

FIG. 03-7

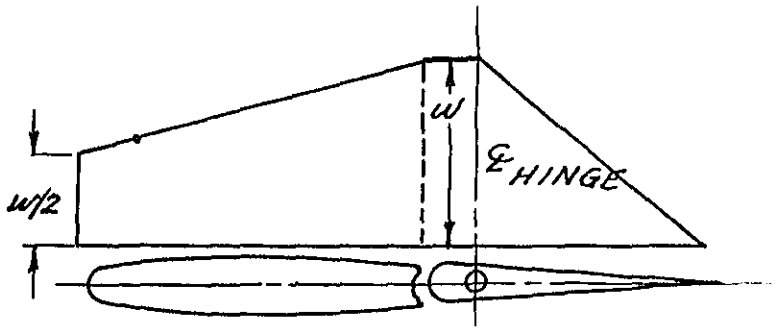

FIG. 03-8

NOTES:

(a) IN BALANCING CONDITIONS (03.2211) P = 40% OF NET BALANCING LOAD (FLAPS RETRACTED); P = 0 (FLAPS DEFLECTED)

(b) IN CONDITION 03.2221(b) P = 20% OF NET TAIL LOAD

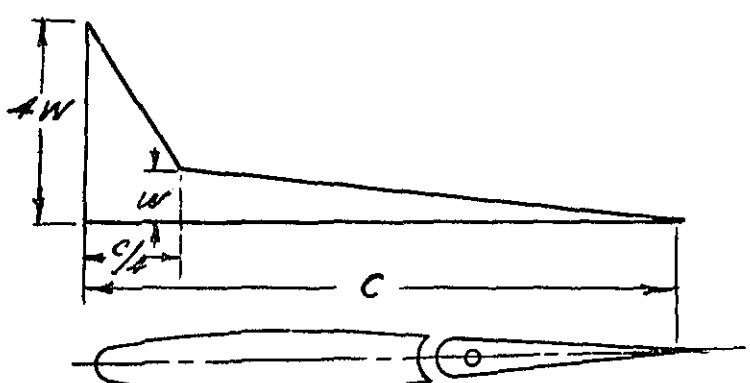

FIG. 03-9

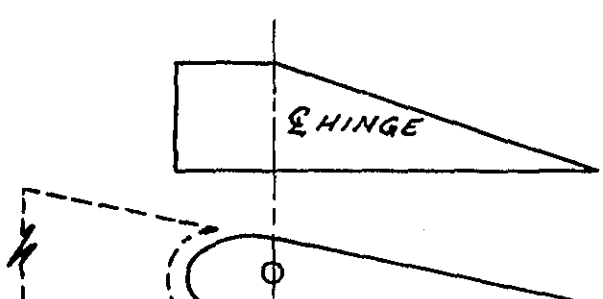

FIG. 03-10

FIGS. 03-7 TO 03-10 - CONTROL SURFACE LOAD DISTRIBUTIONS

03.221 Horizontal tail surfaces. The horizontal tail surfaces shall be designed for the following conditions.

03.2211 Balancing loads. A horizontal tail balancing load is defined as that necessary to maintain the airplane in equilibrium in a specified flight condition with zero pitching acceleration. The horizontal tail surfaces shall be designed for the balancing loads occurring at any point on the limit maneuvering envelope, Figure 03-1, or in the flap conditions. The distribution of Figure 03-7 may be assumed.

03.2212 Maneuvering loads.

(a) At maneuvering speed, V_p, assume a sudden deflection of the elevator control to the maximum upward deflection as limited by the control stops or pilot effort, whichever is critical. The average loading of Fig. 03-3 and the distribution of Figure 03-8 may be used.

NOTE: In determining the resultant normal force coefficient for the tail under these conditions, it will be permissible to assume that the angle of attack of the stabilizer with respect to the resultant direction of air flow is equal to that which occurs when the airplane is in steady unaccelerated flight at a flight speed equal to V_p. The maximum elevator deflection can then be determined from the above criteria and the tail normal force coefficient can be obtained from the data given in NACA Restricted Report No. 688, "Aerodynamic Characteristics of Horizontal Tail Surfaces".

(b) Same as case (a) except that the elevator deflection is downward. The average loading of Figure 03-3 and the distribution of Figure 03-8 may be used.

(c) At all speeds above V_p, the horizontal tail shall be designed for the maneuvering loads resulting from a sudden upward deflection of the elevator, followed by a downward deflection of the elevator such that the following limit conditions of normal acceleration and angular acceleration are obtained:

Condition,	Normal Acceleration, n,	Angular acceleration Radian/sec^2
Down Load	1.0	$+ \frac{45}{V} n_m (n_m - 1.5)$
Up Load	n_m	$- \frac{45}{V} n_m (n_m - 1.5)$

where: n_m = positive limit maneuvering load factor used in the design of the airplane

V = initial pull-up speed in mph

The total tail load for these conditions is the sum of the balancing tail load at speed, V, and the specified value of the normal load factor, n, and the maneuvering load increment due to the specified value of the angular acceleration. The maneuvering load increment of Fig. 03-4 and the distributions of Fig. 03-8 (for downloads) and Fig. 03-9 (for uploads) may be used.

03.2213 Gust loads. The horizontal tail surfaces shall be designed for loads occurring in the following conditions: (a) Positive and negative gusts of 30 fps nominal intensity at speed, V_c, corresponding to flight condition § 03.2112(a) with flaps retracted. The average loadings of Fig. 03-5 and the distribution of Fig. 03-9 may be used for the total tail loading in this condition. (b) Positive and negative gusts of 15 fps nominal intensity at speed, V_f, corresponding to flight condition § 03.212(b) with flaps extended. In determining the total load on the horizontal tail for these conditions, the initial balancing tail loads shall first be determined for steady unaccelerated flight at the pertinent design speed, V_c or V_f. The incremental tail load resulting from the gust shall then be added to the initial balancing tail load to obtain the total tail load. The incremental tail load due to the gust may be computed by the following formula:

$$\Delta t = 0.1 \, K \, U \, V \, S_t \, a_t \left(1 - \frac{36}{R_w} a_w\right)$$

where:

K = gust coefficient K in § 03.21120

Δt = the limit gust load increment on the tail in pounds

U = nominal gust intensity in fps

V = airplane velocity in mph

S_t = tail surface area in sq. ft.

a_t = slope of lift curve of tail surface, C_L per degree

a_w = slope of lift curve of wing, C_L per degree

R_w = aspect ratio of the wing

03.2214 Unsymmetrical loads. The maximum horizontal tail surface loading (that is, load per unit area), as determined by the preceding subsections, shall be applied to the horizontal surfaces on one side of the plane of symmetry and the following percentages of that loading shall be applied on the opposite side:

100-10 (n-1)%, but not greater than 80%, where n is the specified positive maneuvering load factor.

03.222 Vertical tail surfaces.

03.2221 Maneuvering loads. At all speeds up to V_D:

(a) With the airplane in unaccelerated flight at zero yaw, assume a sudden displacement of the rudder control to the maximum deflection as limited by the control stops or pilot effort, whichever is critical. The average loading of Fig. 03-3 and the distribution of Fig. 03-8 may be used.

(b) Assume that the airplane yaws to a sideslip angle of 15°, while the rudder control is maintained at full deflection (except as limited by pilot effort) in the direction tending to increase the sideslip. The average loading of Fig. 03-3 and the distribution of Fig. 03-7 may be used.

(c) Assume that the airplane yaws to a sideslip angle of 15° while the rudder control is maintained in the neutral position (except as limited by pilot effort). The average loading of Fig. 03-3 and the distribution of Fig. 03-9 may be used. The assumed sideslip angles may be reduced if it is shown that the value chosen for a particular speed can not be exceeded in the cases of steady slips, uncoordinated rolls from a steep bank, and sudden failure of the critical engine with delayed corrective action.

03.2222 Gust loads. The airplane shall be assumed to encounter a gust of 30 fps nominal intensity, normal to the plane of symmetry while in unaccelerated flight at speed, V_C.

The gust loading shall be computed by the following formula:

$$\overline{W} = \frac{K\,U\,V\,a}{575}$$

where: $\overline{W}$ = average limit unit pressure in psf

$K = 1.33 - \dfrac{4.5}{\left(\dfrac{W}{S_V}\right)^{3/4}}$, except that K shall not be less than 1.0. A value of K obtained by rational determination may be used.

U = nominal gust intensity in fps

V = airplane speed in mph

a = slope of lift curve of vertical surface in radians corrected for aspect ratio

S_V = vertical surface area in sq. ft.

W = design weight in lbs.

This loading applies only to that portion of the vertical surfaces having a well-defined leading edge. The average loading of Fig. 03-6 and the distribution of Fig. 03-9 may be used.

03.2223 Outboard fins. When outboard fins are carried on the horizontal tail surface, the tail surfaces shall be designed for the maximum horizontal surface load in combination with the corresponding loads induced on the vertical surfaces by end plate effects. Such induced effects need not be combined with other vertical surface loads. When outboard fins extend above and below the horizontal surface, the maximum vertical surface loading (load per unit area) as determined by § 03.222 shall be applied to the portion of the vertical surfaces above (or below) the horizontal surface, and 80% below (or above) the horizontal surface.

03.223 Ailerons. In the symmetrical flight conditions (see § 03.211), the ailerons shall be designed for all loads to which they are subjected while in the neutral position.

In unsymmetrical flight conditions (see 03.2131), the ailerons shall be designed for the loads resulting from the following deflections except as limited by pilot effort:

(1) At speed, V_p, assume a sudden displacement of the aileron control to the maximum deflection.

(2) When V_c is greater than V_p, the aileron deflection at V_c shall be that required to produce a rate of roll not less than that obtained in condition (1).

(3) At speed, V_d, the aileron deflection shall be that required to produce a rate of roll not less than 1/3 of that which would be obtained at the speed and aileron deflection specified in condition (1).

NOTE: For conventional ailerons, the deflections for conditions (2) and (3) may be computed from:

$$\delta_2 = \frac{V_p}{V_c}\,\delta_1 \quad ; \quad \text{and} \quad \delta_3 = \frac{0.5\,V_p}{V_d}\,\delta_1$$

where: δ_1 = total aileron deflection (sum of both aileron deflections in condition (1)

δ_2 = total aileron deflection in condition (2)

δ_3 = total deflection in condition (3). In the equation for δ_3, the 0.5 factor is used instead of 0.33 to allow for wing torsional flexibility.

The critical loading on the ailerons should occur in conditions (2) if V_d is less than 2 V_c and the wing meets the torsional stiffness criteria. The normal force coefficient, C_n, for the ailerons may be taken as $0.04\,\delta$

where δ is the deflection of the individual aileron in degrees. The critical condition for wing torsional loads will depend upon the basic airfoil moment coefficient as well as the speed and may be determined as follows:

$$\frac{T_3}{T_2} = \frac{(C \quad -.01\,\delta 3_d)\quad V_d^2}{(C_m \; -.01\,\delta 2_d)\quad V_c^2}$$

where: T_3/T_2 is the ratio of wing torsion in condition (3) to that in condition (2)

$\delta 2_d$ and $\delta 3_d$ are the down deflections of the individual aileron in conditions (2) and (3) respectively.

When T_3/T_2 is greater than 1.0, condition (3) is critical; when T_3/T_2 is less than 1.0, condition (2) is critical. In lieu of the above rational conditions, the average loading of Fig. 03-3 and the distribution of Fig. 03-10 may be used.

03.224 Wing flaps. Wing flaps, their operating mechanism, and supporting structure shall be designed for critical loads occurring in the Flap Extended Flight Conditions (see § 03.212) with the flaps extended to any position from fully retracted to fully extended. The effects of propeller slipstream corresponding to take-off power shall be taken into account at an airplane speed of not less than 1.4 V_S where V_S is the computed stalling speed with flaps fully retracted at the design weight.

03.225 Tabs. Control surface tabs shall be designed for the most severe combination of airspeed and tab deflection likely to be obtained within the limit V-n diagram, Figure 03-1, for any usable loading condition of the airplane.

03.226 Special devices. The loading for special devices employing aerodynamic surfaces, such as slots and spoilers shall be based on test data.

03.23 Control system loads.

03.230 Primary flight controls and systems. Flight control systems and supporting structures shall be designed for loads corresponding to 125% of the computed hinge moments of the movable control surface in the conditions prescribed in § 03.22, subject to the following maxima and minima:

(a) The system limit loads, need not exceed those which can be produced by the pilot or pilots and automatic devices operating the controls.

(b) The loads shall in any case be sufficient to provide a rugged system for service use, including consideration of jamming, ground gusts, taxiing tail to wind, control inertia, and friction.

Acceptable maximum and minimum pilot loads for elevator, aileron, and rudder controls are shown in Figure 03-11. These pilot loads shall be assumed to act at the appropriate control grips or pads in a manner simulating flight conditions and to be reacted at the attachments to the control system to the control surface horn.

03.2300 Dual controls. When dual controls are provided, the systems shall be designed for the pilots operating in opposition, using individual pilot loads equal to 75% of those obtained in accordance with § 03.230, except that the individual pilot loads shall not be less than the minimum loads specified in Figure 03-11.

03.231 Ground gust conditions. The following ground gust conditions are not mandatory except that they shall be investigated in cases where a deviation from the minimum control forces of Figure 03-11 is desired. The following conditions are intended to simulate the loadings on control surfaces due to ground gusts and taxiing tail to wind.

The limit hinge moment, H, shall be obtained from the following formula:

$$H = K\,c\,S\,q$$

where: H = limit hinge moment (ft. lb.)

c = mean chord (ft) of the control surface aft of the hinge line

S = area of control surface (sq. ft) aft of the hinge line

q = dynamic pressure (psf) to be based on a design speed not less than $10\sqrt{W/S} + 10$, mph, except that the design speed need not exceed 60 mph

K = factor as specified below:

Surface	K	Remarks
Aileron	+ 0.75	Control column locked or lashed in mid-position
	± 0.50	Ailerons at full throw; + moment on one aileron, - moment on other

FIG. 03-11 - PILOT CONTROL FORCE LIMITS

LIMIT PILOT LOADS		
CONTROL	MAXIMUM LOAD (For design weight, W, equal to or less than 5000 lbs. (1)	MINIMUM LOAD (2)
Aileron: Stick	67 lbs.	40 lbs.
Wheel (3)	53 D in. lbs.(4)	40 D in. lbs.
Elevator: Stick	167 lbs.	100 lbs.
Wheel	200 lbs.	100 lbs.
Rudder:	200 lbs.	130 lbs.

(1) For design weights, W, greater than 5000 lbs., the above specified maximum values shall be increased linearly with weight to 1.5 times the specified values, at a design weight of 25,000 lbs.

(2) In cases where the ground gust conditions of § 03.231 would give rise to lower control forces than the minimums specified in this figure, such lower values may be used except that they shall not be less than 0.6 of the above stated minimums.

(3) The critical portions of the aileron control system shall also be designed for a single tangential force having a limit value equal to 1.25 times the couple force determined from the above criteria.

(4) D = wheel diameter.

Surface	K	Remarks
Elevator	± 0.75	Elevator (a) full up and (b) full down
Rudder	± 0.75	Rudder (a) in neutral and (b) at full throw

As used above in connection with ailerons and elevators, a positive value of K indicates a moment tending to depress the surface while a negative value of K indicates a moment tending to raise the surface.

03.232 Secondary controls and systems. Secondary controls, such as wheel brakes, spoilers, and tab controls, shall be designed for the loads based on the maximum which a pilot is likely to apply to the control in question.

03.24 Ground loads. The loads specified in the following conditions shall be considered as the external loads and inertia forces that would occur in an airplane structure acting as a rigid body. In each of the ground loads conditions specified the external reactions shall be placed in equilibrium with the linear and angular inertia forces in a rational or conservative manner.

03.240 Design weight. The design weight used in the landing conditions shall not be less than the maximum weight for which certification is desires; provided, however, that for multi-engine airplanes meeting the one-engine inoperative climb requirement of § 03.123(b), the airplane may be designed for a design landing weight which is less than the maximum design weight, if compliance is shown with the following sections of Part 04 in lieu of the corresponding requirements of this Part: the ground load requirements of § 04.24, the shock absorption requirements of § 04.361 and its subsections, the wheel and tire requirements of § 04.363 and § 04.364, and the fuel jettisoning system requirements of § 04.428.

03.241 Load factor for landing conditions. In the following landing conditions the limit vertical inertia load factor at the center of gravity of the airplane shall be chosen by the designer but shall not be less than the value which would be obtained when landing the airplane with a descent velocity, in fps, equal to the following value:

$$V(\text{fps}) = 4.4\,(W/S)^{\frac{1}{4}}$$

except that the descent velocity need not exceed 10 fps and shall not be less than 7 fps. Wing lift not exceeding 2/3 of the weight of the airplane may be assumed to exist throughout the landing impact and may, if desired, be assumed to act through the airplane c.g. When such wing lift is assumed, the ground reaction load factor may be taken equal to the inertia load factor minus the ratio of the

assumed wing lift to the airplane weight. (See § 03.3612 for requirements concerning the energy absorption tests which determine the limit load factor corresponding to the required limit descent velocities.) In no case, however, shall the inertia load factor be used for design purposes be less than 2.67, nor shall the limit ground reaction load factor be less than 2.0, unless it is demonstrated that lower values of limit load factor will not be exceeded in taxiing the airplane over terrain having the maximum degree of roughness to be expected under intended service use at all speeds up to take-off speed.

03.242 Landing cases and attitudes. For conventional arrangements of main and nose or main and tail wheels, the airplane shall be assumed to contact the ground at the specified limit vertical velocity in the following attitudes. (See Figure 03-12 for acceptable landing conditions which are considered to conform to the following landing conditions.)

03.2421 Level landing.

(a) Tail wheel type. Normal level flight attitude.

(b) Nose wheel type. Two cases shall be considered:

(1) Nose and main wheels contacting ground simultaneously,

(2) Main wheels contacting ground, nose wheel just clear of ground. (The angular attitude may be assumed the same as in (a) for purposes of analysis.)

In this condition, drag components simulating the forces required to accelerate the tires and wheels up to the landing speed shall be properly combined with the vertical ground reactions. The wheel spin-up drag loads may be based on vertical ground reactions assuming wing lift and a tire-sliding coefficient of friction of 0.8, but in any case the drag loads shall not be less than 25% of the vertical ground reactions neglecting wing lift.

03.2422 Tail down.

(a) Tail wheel type. Main and tail wheels contacting ground simultaneously.

(b) Nose wheel type. Stalling attitude or the maximum angle permitting clearance of the ground by all parts of the airplane, whichever is the lesser.

In this condition, it shall be assumed that the ground reactions are vertical, the wheels having been brought up to speed before the maximum vertical load is attained.

03.2423 One wheel landing. One side of the main gear shall contact the ground with the airplane in the level attitude. The ground reactions shall be the same as those obtained on the one side in the level attitude. (See § 03.2421)

CONDITION	TAIL WHEEL TYPE		NOSE WHEEL TYPE		
	1	2	1 (a)	1 (b)	2
	Level landing with inclined reactions	Tail down landing with vertical reactions	Level landing with inclined reactions	Level landing with nose wheel just clear of ground	Tail down landing with vertical reactions
Reference Section	§ 03.2421	§ 03.2422	§ 03.2421(a)	§03.2421(b)	§ 03.2422
Vertical component at C.G.	nW	nW	nW	nW	nW
Fore and aft component at C.G.	KnW	0	KnW	KnW	0
Lateral component in either direction at C.G.	0	0	0	0	0
Shock absorber extension (hydraulic shock absorber)	Note (2)	Note (2)	Note (2)	Note (2)	Note (2)
Shock absorber deflection (rubber or spring shock absorber)	100% Static	100% Static	100% Static	100% Static	100% Static
Tire Deflection					
Main Wheel loads (both wheels) V_r	nW	NW b/d	nW b'/d'	nW	nW
Main Wheel loads (both wheels) D_r	KV_r	0	KV_r	KV_r	0
Tail (nose) wheel loads V_f	0	nW a/d	nW a'/d'	0	0
Tail (nose) wheel loads D_f	0	0	KV_f	0	0
Notes	1 and 3		1	1 and 3	3

Note (1) K may be determined as follows: K = 0.25 for W = 3000 lbs. or less; K = 0.33 for W = 6000 lbs. or greater, with linear variation of K between these weights.

Note (2) For the purpose of design, the maximum load factor shall be assumed to occur throughout the shock absorber stroke from 25% deflection to 100% deflection unless demonstrated otherwise, and the load factor shall be used with whatever shock absorber extension is most critical for each element of the landing gear.

Note (3) Unbalanced moments shall be balanced by a rational or conservative method.

FIG. 03-12 (a) - BASIC LANDING CONDITIONS

TAIL WHEEL TYPE

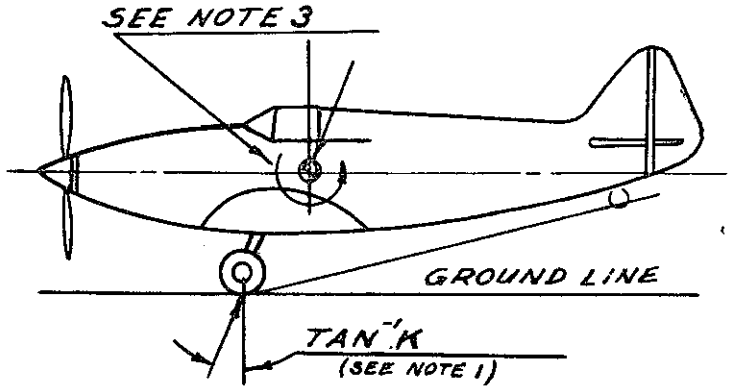

CONDITION 1 - LEVEL LANDING WITH INCLINED REACTIONS

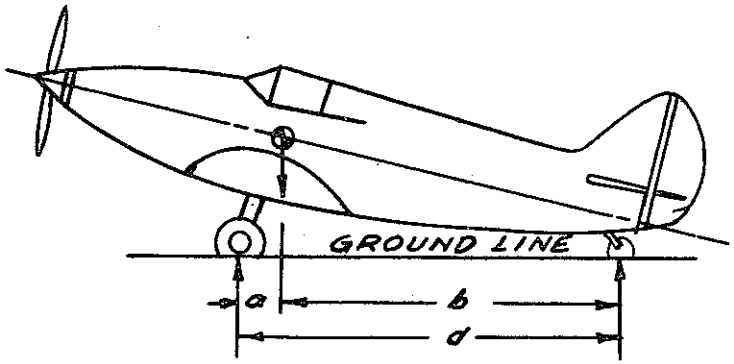

CONDITION 2 - TAIL DOWN LANDING WITH VERTICAL REACTIONS

FIG. 03-12 (b)
BASIC LANDING CONDITIONS

NOSE WHEEL TYPE

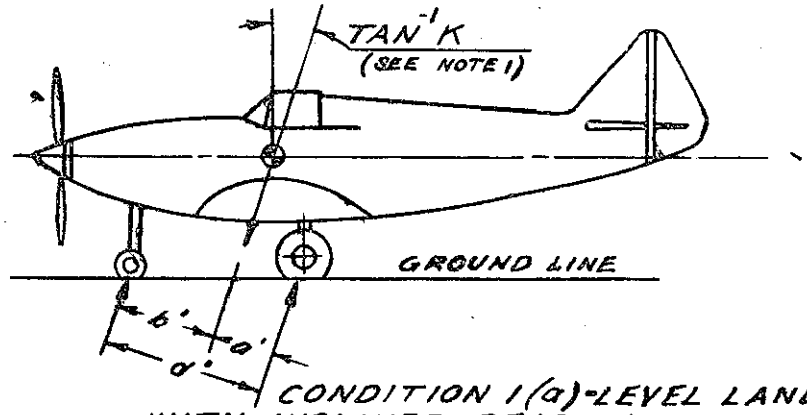

CONDITION 1(a) - LEVEL LANDING WITH INCLINED REACTIONS

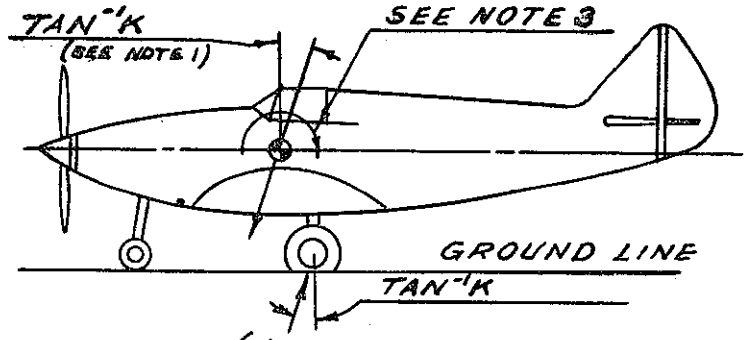

CONDITION 1(b) - LEVEL LANDING WITH NOSE WHEEL JUST CLEAR OF GROUND

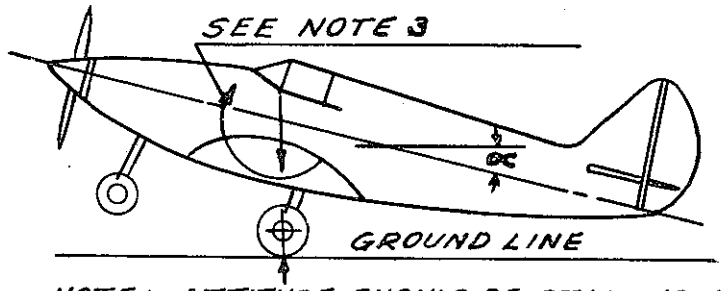

NOTE: ATTITUDE SHOULD BE STALLING ATTITUDE OR MAXIMUM ANGLE PERMITTING CLEARANCE OF THE GROUND BY ALL PARTS OF THE AIRPLANE, WHICHEVER IS THE LESSER.

CONDITION 2 - TAIL DOWN LANDING WITH VERTICAL REACTIONS

03.243 Ground roll conditions.

03.2431 Braked roll. The limit vertical load factor shall be 1.33. The attitude and ground contacts shall be those described for level landings in § 03.2421, with the shock absorbers and tires deflected to their static positions. A drag reaction equal to the vertical reaction at the wheel multiplied by a coefficient of friction of 0.8 shall be applied at the ground contact point of each wheel having brakes, except that the drag reaction need not exceed the maximum value based on limiting brake torque.

03.2432 Side load. Level attitude with main wheels only contacting the ground, with the shock absorbers and tires deflected to their static positions. The limit vertical load factor shall be 1.33 with the vertical ground reaction divided equally between main wheels. The limit side inertia factor shall be 0.83 with the side ground reaction divided between main wheels as follows:

0.57 acting inboard on one side,
0.33W acting outboard on the other side

03.244 Supplementary conditions for tail wheels.

03.2441 Obstruction load. The limit ground reaction obtained in the tail down landing condition shall be assumed to act up and aft through the axle at 45°. The shock absorber and tire may be assumed deflected to their static positions.

03.2442 Side load. A limit vertical ground reaction equal to the static load on the tail wheel, in combination with a side component of equal magnitude. When a swivel is provided, the tail wheel shall be assumed swiveled 90° to the airplane longitudinal axis, the resultant ground load passing through the axle. When a lock steering device or shimmy damper is provided, the tail wheel shall also be assumed in the trailing position with the side load acting at the ground contact point. The shock absorber and tire may be assumed deflected to their static positions.

03.245 Supplementary conditions for nose wheels.

03.2451 Aft load. Limit force components at axle:
Vertical - 2.25 times static load on wheel
Drag - 0.8 times vertical load

03.2452 Forward load. Limit force components at axle:
Vertical - 2.25 times static load on wheel
Forward - 0.4 times vertical load

03.2453 Side load. Limit force components at ground contact:
Vertical - 2.25 times static load on wheel
Side - 0.7 times vertical load

03.246 Supplementary conditions for skiplanes. The airplane should be assumed resting on the ground with one main ski frozen in the snow and the other main ski and the tail ski free to slide. A limit side force P/3 shall be applied at the most convenient point near the tail assembly, where P is the static ground reaction on the tail ski.

03.25 Water loads. The following requirements shall apply to the entire airplane, but have particular reference to hull structure, wing, nacelles, and float supporting structure.

03.250 Design weight. The design weight used in the water landing conditions shall not be less than the maximum weight for which certification is desired for any operation.

03.251 Landing with inclined reactions (float seaplanes). The vertical component of the limit load factor shall be 4.2 except that it need not exceed a value given by the following formula:

$$n = 3.0 + 0.133 (W/S)$$

The propeller axis (or equivalent reference line) shall be assumed to be horizontal and the resultant water reaction to be acting in the plane of symmetry and passing through the center of gravity of the airplane, but inclined so that its horizontal component is equal to $\frac{1}{4}$ of its vertical component. The forces representing the weights of and in the airplane shall be assumed to act in a direction parallel to the water reaction.

03.2510 Factors of safety. For the design of float attachment members, including the members necessary to complete a rigid brace truss through the fuselage, the factor of safety shall be 1.85. For the remaining structural members, the factor of safety shall be 1.5.

03.252 Landing with vertical reactions (float seaplanes). The limit load factor shall be 4.33 acting vertically, except that it need not exceed a value given by the following formula:

$$n = 3.0 + 0.133 (W/S)$$

The propeller axis (or equivalent reference line) shall be assumed to be horizontal, and the resultant water reaction to be vertical and passing through the center of gravity of the airplane.

03.2520 Factors of safety. The factors of safety shall be the same as those specified in § 03.2510.

03.253 Landing with side load (float seaplanes). The vertical component of the limit load factor shall be 4.0. The propeller axis (or equivalent reference line) shall be assumed to be horizontal and the resultant water reaction shall be assumed to be in the vertical plane which passes through the center of gravity of the airplane and is perpendicular to the propeller axis. The vertical load shall be applied through the keel or keels of the float or floats and evenly divided between the floats when twin floats are used. A side load equal to $\frac{1}{4}$ of the vertical load shall be applied along a line approximately half-way between the bottom of the keel and the level of the water line at rest. When twin floats are used, the entire side load specified shall be applied to the float on the side from which the water reaction originates.

03.254 Boat seaplanes.

03.2540 Local bottom pressures.

(a) Maximum local pressure. The maximum value of the limit local pressure shall be determined from the following equation:

$$P_{max} = 0.055\, V_{s_o}{}^{1.4} \left(1 + \frac{W}{50{,}000}\right)^{0.25}$$

where: P = pressure in psi

V_{s_o} = stalling speed, flaps down, power off, in mph (To be calculated on the basis of wind tunnel data or flight tests on previous airplanes)

W = design weight

(b) Variation in local pressure. The local pressures to be applied to the hull bottom shall vary in accordance with Figure 03-13. No variation from keel to chine (beamwise) shall be assumed, except when the chine flare indicates the advisability of higher pressures at the chine.

(c) Application of local pressure. The local pressures determined in (a) and (b) shall be applied over a local area in such a manner as to cause the maximum local loads in the hull bottom structure.

03.2541 Distributed bottom pressures.

(a) For the purpose of designing frames, keels, and chine structure, the limit pressures obtained from § 03.2540 and Figure 03-13 shall be reduced to $\frac{1}{2}$ the local values and simultaneously applied over the entire hull bottom. The loads so obtained shall be carried into the side-wall structure of the hull proper, but need not be transmitted in a fore-and-aft direction as shear and bending loads.

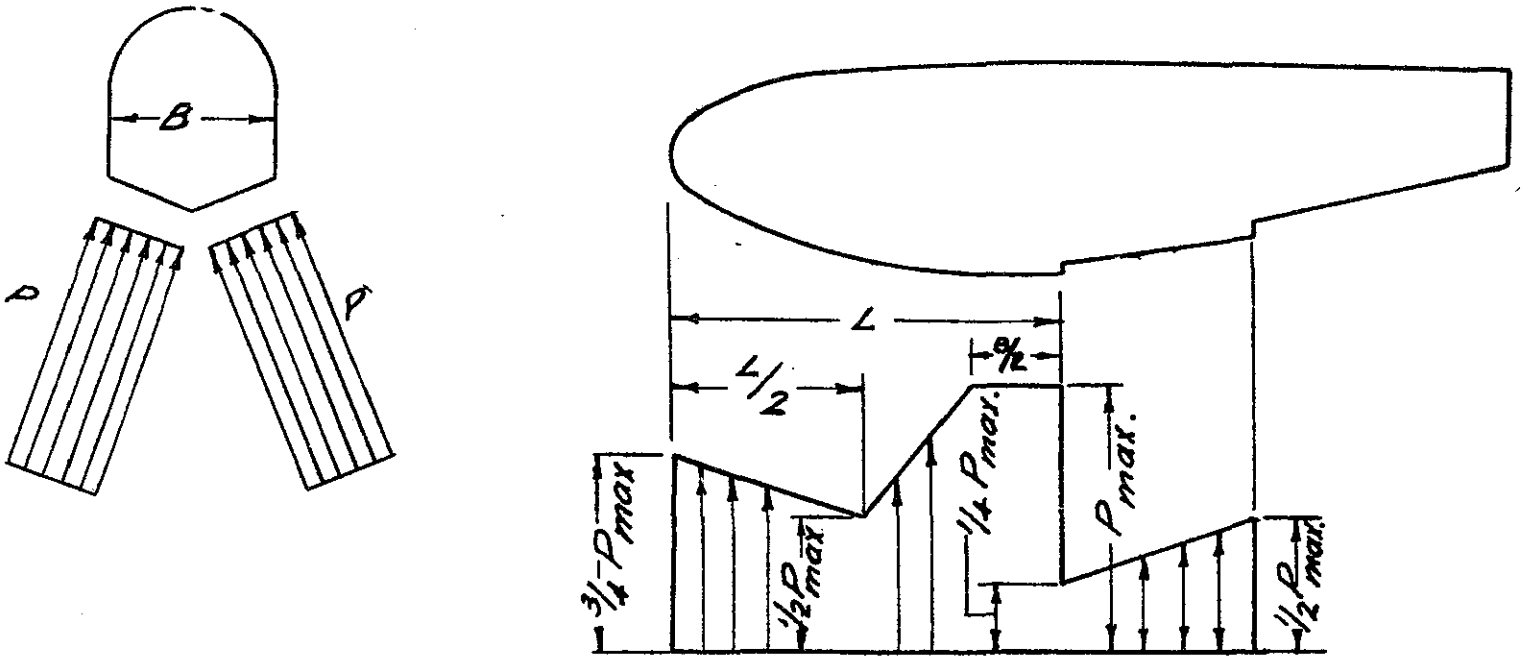

DISTRIBUTION OF LOCAL PRESSURES
BOAT SEAPLANES

FIG. 03-13

(b) Unsymmetrical loading. Each floor member or frame shall be designed for a load on one side of the hull centerline equal to the most critical symmetrical loading, combined with a load on the other side of the hull centerline equal to $\frac{1}{2}$ of the most critical symmetrical loading.

03.2542 Step loading condition.

(a) Application of load. The resultant water load shall be applied vertically in the plane of symmetry so as to pass through the center of gravity of the airplane.

(b) Acceleration. The limit acceleration shall be 4.33.

(c) Hull shear and bending loads. The hull shear and bending loads shall be computed from the inertia loads produced by the vertical water load. To avoid excessive local shear loads and bending moments near the point of water load application, the water load may be distributed over the hull bottom, using pressures not less than those specified in § 03.2541.

03.2543 Bow loading condition.

(a) Application of load. The resultant water load shall be applied in the plane of symmetry at a point 1/10 of the distance from the bow to the step and shall be directed upward and rearward at an angle of 30° from the vertical.

(b) Magnitude of load. The magnitude of the limit resultant water load shall be determined from the following equation:

$$P_b = 1/2 n_s W_e$$

where: P_b = the load in lbs.

n_s = the step landing load factor

W_e = an effective weight which is assumed equal to $\frac{1}{2}$ the design weight of the airplane.

(c) Hull shear and bending loads. The hull shear and bending loads shall be determined by proper consideration of the inertia loads which resist the linear and angular accelerations involved. To avoid excessive local shear loads, the water reaction may be distributed over the hull bottom, using pressures not less than those specified in § 03.2541.

03.2544 Stern loading condition.

(a) Application of load. The resultant water load shall be applied vertically in the plane of symmetry and shall be distributed over the hull bottom from the second step forward with an intensity equal to the pressures specified in § 03.254.

(b) Magnitude of load. The limit resultant load shall equal 3/4 of the maximum design weight of the airplane.

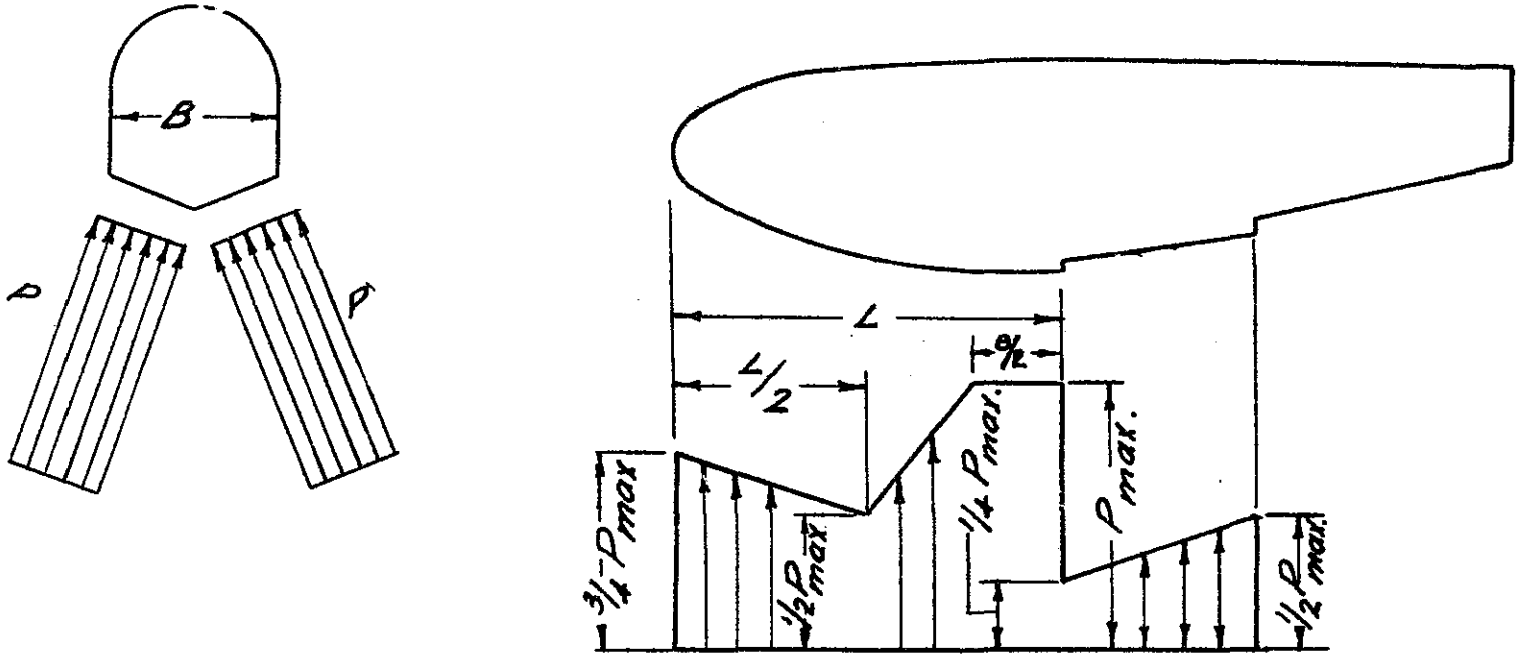

DISTRIBUTION OF LOCAL PRESSURES
BOAT SEAPLANES

FIG. 03-13

(b) Unsymmetrical loading. Each floor member or frame shall be designed for a load on one side of the hull centerline equal to the most critical symmetrical loading, combined with a load on the other side of the hull centerline equal to $\frac{1}{2}$ of the most critical symmetrical loading.

03.2542 Step loading condition.

(a) Application of load. The resultant water load shall be applied vertically in the plane of symmetry so as to pass through the center of gravity of the airplane.

(b) Acceleration. The limit acceleration shall be 4.33.

(c) Hull shear and bending loads. The hull shear and bending loads shall be computed from the inertia loads produced by the vertical water load. To avoid excessive local shear loads and bending moments near the point of water load application, the water load may be distributed over the hull bottom, using pressures not less than those specified in § 03.2541.

03.2543 Bow loading condition.

(a) Application of load. The resultant water load shall be applied in the plane of symmetry at a point 1/10 of the distance from the bow to the step and shall be directed upward and rearward at an angle of 30° from the vertical.

(b) Magnitude of load. The magnitude of the limit resultant water load shall be determined from the following equation:

$$P_b = 1/2 n_s W_e$$

where: P_b = the load in lbs.

n_s = the step landing load factor

W_e = an effective weight which is assumed equal to $\frac{1}{2}$ the design weight of the airplane.

(c) Hull shear and bending loads. The hull shear and bending loads shall be determined by proper consideration of the inertia loads which resist the linear and angular accelerations involved. To avoid excessive local shear loads, the water reaction may be distributed over the hull bottom, using pressures not less than those specified in § 03.2541.

03.2544 Stern loading condition.

(a) Application of load. The resultant water load shall be applied vertically in the plane of symmetry and shall be distributed over the hull bottom from the second step forward with an intensity equal to the pressures specified in § 03.254.

(b) Magnitude of load. The limit resultant load shall equal 3/4 of the maximum design weight of the airplane.

(c) Hull shear and bending loads. The hull shear and bending loads shall be determined by assuming the hull structure to be supported at the wing attachment fittings and neglecting internal inertia loads. This condition need not be applied to the fittings or to the portion of the hull ahead of the rear attachment fittings.

03.2545 Side loading condition.

(a) Application of load. The resultant water load shall be applied in a vertical plane through the center of gravity. The vertical component shall be assumed to act in the plane of symmetry and horizontal component at a point half-way between the bottom of the keel and the load waterline at design weight (at rest).

(b) Magnitude of load. The limit vertical component of acceleration shall be 3.25 and the side component shall be equal to 15% of the vertical component.

(c) Hull shear and bending loads. The hull shear and bending loads shall be determined by proper consideration of the inertia loads or by introducing couples at the wing attachment points. To avoid excessive local shear loads, the water reaction may be distributed over the hull bottom, using pressures not less than those specified by § 03.2541.

03.255 Seaplane float loads. Each main float of a float seaplane shall be capable of carrying the following loads when supported at the attachment fittings as installed on the airplane:

(a) A limit load, acting upward, applied at the bow end of float and of magnitude equal to that portion of the airplane weight normally supported by the particular float.

(b) A limit load, acting upward, applied at the stern of magnitude equal to 0.8 times that portion of the airplane gross weight normally supported by the particular float.

(c) A limit load, acting upward, applied at the step and of magnitude equal to 1.5 times that portion of the airplane weight normally supported by the particular float.

03.2550 Seaplane float bottom loads. Main seaplane float bottoms shall be designed to withstand the following loads:

(a) A limit load of at least 10 psi over that portion of the bottom lying between the first step and a section 25% of the distance from the step to the bow.

(b) A limit load of at least 5 psi over that portion of the bottom lying between the section 25% of the distance from the step to the bow and a section 75% of the distance from the step to the bow.

(c) A limit load of at least 3 psi over that portion of the bottom aft of the step (aft of main step if more than one step is used).

03.256 Wing tip float loads. Wing tip floats and their attachment, including the wing structure, shall be analyzed for each of the following conditions:

(a) A limit load acting vertically up at the completely submerged center of buoyancy and equal to 3 times the completely submerged displacement.

(b) A limit load inclined upward at 45° to the rear and acting through the completely submerged center of buoyancy and equal to 3 times the completely submerged displacement.

(c) A limit load acting parallel to the water surface (laterally) applied at the center of area of the side view and equal to 1.5 times the completely submerged displacement.

03.2560 The primary wing structure shall incorporate sufficient extra strength to insure that failure of wing-tip float attachment members occurs before the wing structure is damaged.

03.257 Seawing loads. Seawing design loads shall be based on suitable test data.

03.3 DESIGN AND CONSTRUCTION

03.30 General. The airplane shall not incorporate design features or details which experience has shown to be hazardous or unreliable. The suitability of all questionable design details or parts having an important bearing on safety in operation shall be established by tests. Minimum tests required to prove the strength and proper functioning of particular parts are specified.

03.300 Approved specifications and parts. Where the word "approved" or "acceptable" is used in this Part to describe specifications, materials, parts, methods, and processes, such items shall be specifically approved by the Administrator upon a basis and in a manner found by him to be necessary to safety.

03.301 Materials. The suitability and durability of all materials used in the airplane structure shall be established on the basis of experience or tests. All materials used in the airplane structure shall conform to approved specifications which will insure their having the strength and other properties assumed in the design data.

03.302 Fabrication methods. The methods of fabrication employed in constructing the airplane structure shall be such as to produce a uniformly sound structure. When a fabrication process such as gluing, spot-welding, or heat-treating requires close control to attain this objective, the process shall be performed in accordance with an approved process specification.

03.3020 Standard fastenings. All bolts, pins, screws, and rivets used in the structure shall be of an approved type. The use of an approved locking device or method is required for all such bolts, pins, and screws. Self-locking nuts shall not be used on bolts subject to rotation in operating the airplane.

03.303 Protection. All members of the structure shall be suitably protected against deterioration or loss of strength in service due to weathering, corrosion, abrasion, or other causes. In seaplanes, special precaution shall be taken against corrosion from salt water, particularly where parts made from different metals are in close proximity. Adequate provisions for ventilation and drainage shall be made.

03.304 Inspection provisions. Adequate means shall be provided to permit the close examination of such parts of the airplane as require periodic inspection, adjustments for proper alignment and functioning, and lubrication of moving parts.

03.31 Structural parts.

03.310 Material strength properties and design values. Material strength properties shall be based on a sufficient number of tests of material conforming to specifications to establish design values on a

statistical basis. The design values shall be so chosen that the probability of any structure being understrength because of material variations is extremely remote. ANC-5* values and ANC-18* shall be used unless shown to be inapplicable in a particular case.

*(Note: ANC-5, "Strength of Aircraft Elements" and ANC-18, "Design of Wood Aircraft Structures" are published by the Army-Navy-Civil Committee on Aircraft Design Criteria and may be obtained from the Government Printing Office, Washington, D. C., for $.35 and $.75 respectively.)

03.311 Special factors. Where there may be uncertainty concerning the actual strength of particular parts of the structure, or where the strength is likely to deteriorate in service prior to normal replacement, increased factors of safety shall be provided to insure that the reliability of such parts is not less than the rest of the structure as specified in the following subsections.

03.3110 Variability factor. For parts whose strength is subject to appreciable variability due to uncertainties in manufacturing processes and inspection methods, the factor of safety shall be increased sufficiently to make the probability of any part being understrength from this cause extremely remote. Minimum variability factors (only the highest pertinent variability factor need be considered) are as follows.

03.31100 Castings.

(a) Where visual inspection only is to be employed, the variability factor shall be 2.0.

(b) The variability factor may be reduced to 1.25 for ultimate loads and 1.15 for limit loads when at least three sample castings are tested to show compliance with these factors, and all sample and production castings are visually and radiographically inspected in accordance with an approved inspection specification.

(c) Other inspection procedures and variability factors may be used if approved by the Administrator.

03.3111 Bearing factors. The factor of safety in bearing at bolted or pinned joints shall be suitably increased to provide for the following conditions: (Values in ANC-5 are acceptable)

(a) relative motion in operation. (Control surface and system joints are covered in § 03.34 and § 03.35.)

(b) joints with clearance (free fit) subject to pounding or vibration.

Bearing factors need not be applied when covered by other special factors.

03.3112 Fitting factor. Fittings are defined as parts such as end terminals used to join one structural member to another. A multiplying factor of safety of at least 1.15 shall be used in the analysis of all

fittings whose strength is not proven by limit and ultimate load tests in which the actual stress conditions are simulated in the fitting and the surrounding structure. This factor applies to all portions of the fitting, the means of attachment, and bearing on the members joined. In the case of integral fittings, the part shall be treated as a fitting up to the point where the section properties become typical of the member. The fitting factor need not be applied where a type of joint design based on comprehensive test data is used. The following are examples: Continuous joints in metal plating, welded joints, and scarf joints in wood, all made in accordance with approved practices.

03.312 Fatigue strength. The structure shall be designed, in so far as practicable, to avoid points of stress concentration where variable stresses above the fatigue limit are likely to occur in normal service.

03.32 Flutter and vibration prevention measures. Wings, tail, and control surfaces shall be free from flutter, airfoil divergence, and control reversal from lack of rigidity, for all conditions of operation within the limit V-n envelope, and the following detail requirements shall apply:

(a) Adequate wing torsional rigidity shall be demonstrated by tests or other methods suitable to the Administrator.

(b) The mass balance of surfaces shall be such as to preclude flutter.

(c) The natural frequencies of all main structural components shall be determined by vibration tests or other methods satisfactory to the Administrator in doubtful cases.

03.33 Wings.

03.330 Proof of strength. The strength of stressed-skin wings shall be substantiated by load tests or by combined structural analysis and tests.

03.3300 Ribs. The strength of ribs in other than stressed-skin wings shall be proved by test to at least 125 % of the ultimate loads for the most severe loading conditions, unless a rational load analysis and test procedure is employed and the tests cover the variability of the particular type of construction.

The effects of ailerons and high lift devices shall be properly accounted for. Rib tests shall simulate conditions in the airplane with respect to torsional rigidity of spars, fixity conditions, lateral support, and attachment to spars.

03.33. External bracing. When wires are used for external lift bracing they shall be double unless the design provides for a lift-wire-cut condition. Rigging loads shall be taken into account in a rational or conservative manner. The end connections of brace wires shall be such as to minimize restraint against bending or vibration. When brace struts of large fineness ratio are used, the aerodynamic forces on such struts shall be taken into account.

03.332 Covering. Strength tests of fabric covering are required unless approved grades of cloth, methods of support, attachment, and finishing are employed. Special tests may be required when it appears necessary to account for the effects of unusually high design airspeeds, slipstream velocities, or other unusual conditions.

03.34 Control surfaces (fixed and movable).

03.341 Proof of strength. Limit load tests of control surfaces are required. Such tests shall include the horn or fitting to which the control system is attached. In structural analyses, rigging loads due to wire bracing shall be taken into account in a rational or conservative manner.

03.342 Installation. Movable tail surfaces shall be so installed that there is no interference between the surfaces or their bracing when each is held in its extreme position and all others are operated through their full angular movement. When an adjustable stabilizer is used, stops shall be provided which will limit its travel, in the event of failure of the adjusting mechanism, to a range equal to the maximum required to trim the airplane in accordance with § 03.132.

03.343 Hinges. Control surface hinges, excepting ball and roller bearings, shall incorporate a multiplying factor of safety of not less than 6.67 with respect to the ultimate bearing strength of the softest material used as a bearing. For hinges incorporating ball or roller bearings, the approved rating of the bearing shall not be exceeded. Hinges shall provide sufficient strength and rigidity for loads parallel to the hinge line.

03.35 Control systems.

03.350 General. All controls shall operate with sufficient ease, smoothness, and positiveness to permit the proper performance of their function and shall be so arranged and identified as to provide satisfactory convenience in operation and prevent the possibility of confusion and subsequent inadvertent operation. (See § 03.3802 for cockpit controls.)

03.351 Primary flight controls. Primary flight controls are defined as those used by the pilot for the immediate control of the pitching, rolling, and yawing of the airplane.

For two-control airplanes the design shall be such as to minimize the likelihood of complete loss of the lateral-directional control in the event of failure of any connecting or transmitting element in the control system.

03.352 Trimming controls. Proper precautions shall be taken against the possibility of inadvertent, improper, or abrupt tab operations. Means shall be provided adjacent to the control to indicate to the pilot the direction of control movement relative to airplane motion and the position of the trim device with respect to the range of adjustment. Trimming devices shall be capable of continued normal operation in spite of the failure

of any one connecting or transmitting element in the primary flight control system. Tab controls shall be irreversible unless the tab is properly balanced and investigated for flutter. Irreversible tab systems shall provide adequate rigidity and reliability in the position of the system from the tab to the attachment of the irreversible unit to the airplane structure.

03.353 Wing flap controls. The controls shall be such that when the flap has been placed in any position upon which compliance with the performance requirements is based, the flap will not move from that position except upon further adjustment of the control. Means shall be provided to indicate the flap position to the pilot. If any flap position other than fully retracted or extended is used to show compliance with the performance requirements, such means shall indicate each such position.

The time required to extend fully or to retract flaps shall not be less than 15 seconds unless it is demonstrated that the operation of the flaps in a lesser time does not result in unsatisfactory flight characteristics. (See § 03.13101 and § 03.13102.)

03.3530 Flap interconnection. The motion of flaps on opposite sides of the plane of symmetry shall be synchronized by a mechanical interconnection unless another means of interconnection is employed and shown to provide equivalent reliability, or the airplane is demonstrated to have safe flight characteristics while the flaps are retracted on one side and extended on the other.

Where an interconnection is used, it shall, in the case of multi-engined airplanes, be designed to account for the unsymmetrical loads resulting from flight with the engines on one side of the plane of symmetry inoperative and the remaining engines at take-off power. For single engined airplanes, it may be assumed that 100% of the critical airload acts on one side and 70% on the other.

03.354 Stops. All control systems shall be provided with stops which positively limit the range of motion of the control surfaces. Stops shall be so located in the system that wear, slackness, or take-up adjustments will not appreciably affect the range of surface travel. Stops shall be capable of withstanding the loads corresponding to the design conditions for the control system.

03.355 Control system locks. When a device is provided for locking a control surface while the airplane is on the ground or water:

(a) The locking device shall be so installed as to provide unmistakeable warning to the pilot when it is engaged.

(b) Means shall be provided to preclude the possibility of the lock becoming engaged during flight.

03.356 Proof of strength. Tests are required to prove compliance with limit load requirements. The direction of test loads shall be such as to produce the most severe loading of the control system structure.

The tests shall include all fittings, pulleys, and brackets used to attach the control system to the primary structure. Analyses or individual load tests shall be conducted to demonstrate compliance with the multiplying factor of safety requirements specified for control system joints subjected to angular motion.

03.3560 Operation test. An operation test shall be conducted by operating the controls from the pilot's compartment with the entire system so loaded as to correspond to the limit air loads on the surface. In this test there shall be no jamming, excessive friction, or excessive deflection.

03.357 Control system details.

03.3570 General. All control systems and operating devices shall be so designed and installed as to prevent jamming, chafing, or interference as a result of inadequate clearances or from cargo, passengers, or loose objects. Special precautions shall be provided in the cockpit to prevent the entry of foreign objects into places where they might jam the controls. Provisions shall be made to prevent the slapping of cables or tubes against parts of the airplane.

03.3571 Cable systems. Cables, cable fittings, turnbuckles, splices, and pulleys shall be in accordance with approved specifications. Cables smaller than 1/8 inch diameter shall not be used in primary control systems. The design of cable systems shall be such that there will not be hazardous change in cable tension throughout the range of travel under operating conditions and temperature variations. Pulley types and sizes shall correspond to the cables with which they are used, as specified on the pulley specification. All pulleys shall be provided with satisfactory guards which shall be closely fitted to prevent the cables becoming misplaced, or fouling even when slack. The pulleys shall lie in the plane passing through the cable within such limits that the cable does not rub against the pulley flange. Fairleads shall be so installed that they are not required to cause a change in cable direction of more than 3°. Clevis pins (excluding those not subject to load or motion) retained only by cotter pins shall not be employed in the control system. Turnbuckles shall be attached to parts having angular motion in such a manner as to positively prevent binding throughout the range of travel. Provisions for visual inspection shall be made at all fairleads, pulleys, terminals, and turnbuckles.

03.3572 Joints. Control system joints subjected to angular motion in push-pull systems, excepting ball and roller bearings systems, shall incorporate a multiplying factor of safety of not less than 3.33 with respect to the ultimate bearing strength of the softest material used as a bearing. This factor may be reduced to 2.0 for such joints in cable control systems. For ball or roller bearings the approved rating of the bearing shall not be exceeded.

03.3573 Spring devices. The reliability of any spring devices used in the control system shall be established by tests simulating service conditions unless it is demonstrated that failure of the spring will not cause flutter or unsafe flight characteristics.

03.36 Landing gear.

03.361 Shock absorbers. Main, nose, and tail wheel units shall incorporate shock absorbing elements which shall be substantiated by the tests specified in the following subsection. In addition, the shock absorbing ability of the landing gear in taxiing must be demonstrated in the operational tests of § 03.143.

03.3610 Shock absorption tests.

(a) It shall be demonstrated by energy absorption tests that the limit load factors selected for design in accordance with § 03.241 would not be exceeded in landings with the limit descent velocity specified in that section.

(b) In addition, a reserve of energy absorption shall be demonstrated by a test in which the descent velocity is at least 1.2 times the limit descent velocity. In this test there shall be no failure of the shock absorbing unit, although yielding of the unit will be permitted. Wing lift equal to the weight of the airplane may be assumed for purposes of this test.

03.3611 Limit drop tests. If compliance with the specified limit landing conditions of § 03.3610 (a) is demonstrated by free drop tests, these shall be conducted on the complete airplane, or on units consisting of wheel, tire, and shock absorber in their proper relation, from free drop heights not less than the following:

$$h(\text{inches}) = 3.6\ (W/S)^{0.5}$$

except that the free drop height shall not be less than 9.2 inches and need not be greater than 18.7 inches.

If it is desired to simulate the permissible wing lift in free drop tests, the landing gear unit shall be dropped with an effective mass equal to:

$$W_e = W\,\frac{h + (1 - L)\,d}{h + d}$$

where: W_e = the effective weight to be used in the drop test

h = specified height of drop in inches

d = deflection under impact of the tire (at the approved inflation pressure) plus the vertical component of the axle travel relative to the drop mass. The value of d used in the computation of W_e shall not exceed the value actually obtained in the drop tests.

$W = W_M$ for main gear units, equal to the static weight on the particular unit with the airplane in the level attitude (with the nose wheel clear, in the case of nose wheel type airplanes).

$W = W_T$ for tail gear units, equal to the static weight on the tail unit with the airplane in the tail down attitude.

$W = W_N$ for nose wheel units, equal to the static reaction which would exist at the nose wheel, assuming the mass of the airplane concentrated at the center of gravity and exerting a force of 1.0g downward and 0.33g forward.

L = ratio of assumed wing lift to airplane weight, not greater than 0.667.

The attitude in which the landing gear unit is drop tested shall be such as to simulate the airplane landing condition which is critical from the standpoint of energy to be absorbed by the particular unit.

03.3612 Limit load factor determination. In determining the limit airplane inertia load factor, n, from the free drop tests described above, the following formula shall be used:

$$n = n_j \frac{W_e}{W} + L$$

where: n_j = the load factor developed in the drop test, i. e., the acceleration (dV/dt) in g's recorded in the drop test, plus 1.0.

The value of n so determined shall not be greater than the limit inertia load factor used in the landing conditions, § 03.241.

03.3613 Reserve energy absorption drop tests. If compliance with the reserve energy absorption condition specified in § 03.3610 (b) is demonstrated by free drop tests, the drop height shall be not less than 1.44 times the drop height specified in § 03.3611. If it is desired to simulate wing lift equal to the airplane weight, the units shall be dropped with an effective mass equal to

$$W_e = W \frac{h}{h + d}$$

where the symbols and other details are the same as in § 03.3611.

03.362 Retracting mechanism. The landing gear retracting mechanism and supporting structure shall be designed for the maximum load factors in the flight conditions when the gear is in the retracted position. It shall also be designed for the combination of friction, inertia, brake torque, and air loads occurring during retraction at any airspeed up to $1.6V_{S1}$, flaps retracted and any load factors up to those specified for the flaps extended condition, § 03.212. The landing gear and retracting mechanism, including the wheel well doors, shall withstand flight loads with the landing gear extended at any speed up to the maximum speed in level flight at maximum continuous power or V_C whichever is lower. Positive means shall be provided for the purpose of maintaining the wheels in the extended position.

03.3620 Emergency operation. When other than manual operation of the landing gear is employed, an auxiliary means of extending the landing gear shall be provided.

03.3621 Operation test. Proper functioning of the landing gear retracting mechanism shall be demonstrated by operation tests.

03.3622 Position indicator and warning device. When retractable landing wheels are used, means shall be provided for indicating to the pilot when the wheels are secured in either extreme position. In addition, landplanes shall be provided with an aural warning device or a warning device which the Administrator finds to be equally effective, which shall function continuously after the throttle is closed until the gear is down and locked.

03.3623 Control. (See § 03.3802)

03.363 Wheels. Main landing gear wheels (i.e., those nearest the airplane center of gravity) shall be of an approved type in accordance with Part 15. The rated static load of each main wheel shall not be less than the design weight for ground loads (§ 03.240) divided by the number of main wheels. Nose wheels shall be tested in accordance with Part 15 for an ultimate radial load not less than the maximum nose wheel ultimate loads obtained in the ground loads requirements, and for the corresponding side and burst loads specified in Part 15.

03.364 Tires. A landing gear wheel may be equipped with any make or type of tire, provided that the tire is a proper fit on the rim of the wheel and provided that the approved tire rating is not exceeded under the following conditions:

(a) load on main wheel tires equal to the airplane weight divided by the number of wheels,

(b) load on nose wheel tires (to be compared with the dynamic rating established for such tires) equal to the reaction obtained at the nose wheel, assuming the mass of the airplane concentrated at the center of gravity and exerting a force of 1.0 downward and 0.31g forward, the reactions being distributed to the nose and main wheels by the principle of statics with the drag reaction at the ground applied only at those wheels having brakes. When specially constructed tires are used to support an airplane, the wheels shall be plainly and conspicuously marked to that effect. Such markings shall include the make, size, number of plies, and identification marking of the proper tire.

Approved ratings are those assigned by the Tire and Rim Association or by the Administrator.

03.365 Brakes. Brakes shall be installed which are adequate to prevent the airplane from rolling on a paved runway while applying take-off power to the critical engine, and of sufficient capacity to provide adequate speed control during taxiing without the use of excessive pedal or hand forces.

03.366 Skis. Skis shall be approved in accordance with the ski requirements of Part 15. The approved rating of the skis shall not be less than the maximum weight of the airplane on which they are installed.

03.3660 Installation. When type certificated skis are installed, the installation shall be made in accordance with the ski or airplane manufacturer's

recommendations which shall have been approved by the Administrator. When other than type certificated skis are installed, data shall be submitted to the Administrator showing a dimensional drawing of the proposed method of attaching the skis, the sizes and materials of the restraining members, and attachment fittings.

In addition to such shock cord(s) as may be provided, front and rear check cables shall be used on skis not equipped with special stabilizing devices.

03.3661 Tests.

(a) If the airplane is of a model not previously approved with the specific ski installation, it shall satisfactorily pass a ground inspection of the installation, demonstrate satisfactory landing and taxiing characteristics, and comply with such flight tests as may be deemed necessary to indicate that the airplane's flight characteristics are satisfactory with the skis installed.

(b) If the airplane is of a model previously approved with the specific ski installation, it need only satisfactorily pass a ground inspection of the installation.

03.37 Hulls and floats.

03.370 Buoyancy (main seaplane floats). Main seaplane floats shall have a buoyancy in excess of that required to support the gross weight of the airplane in fresh water as follows:

(a) 80% in the case of single floats,
(b) 90% in the case of double floats.

Main seaplane floats for use on airplanes of 2,500 lbs. or more maximum authorized weight shall contain at least 5 water-tight compartments of approximately equal volume. Main seaplane floats for use on airplanes of less than 2,500 lbs. maximum authorized weight shall contain at least 4 such compartments.

03.371 Buoyancy (boat seaplanes). The hulls of boat seaplanes and amphibians shall be divided into water-tight compartments in accordance with the following requirements:

(a) In airplanes of 5,000 lbs. or more maximum authorized weight, the compartments shall be so arranged that, with any 2 adjacent compartments flooded, the hull and auxiliary floats (and tires, if used) will retain sufficient buoyancy to support the gross weight of the airplane in fresh water.

(b) In airplanes of 1,500 to 5,000 lbs. maximum authorized weight, the compartments shall be so arranged that, with any one compartment flooded, the hull and auxiliary floats (and tires, if used) will retain sufficient buoyancy to support the maximum authorized weight of the airplane in fresh water.

(c) In airplanes of less than 1,500 lbs. maximum authorized weight, water-tight subdivision of the hull is not required.

(d) Bulkheads may have water-tight doors for the purpose of communication between compartments.

03.372 Water stability. Auxiliary floats shall be so arranged that when completely submerged in fresh water, they will provide a righting moment which is at least 1.5 times the upsetting moment caused by the airplane being tilted. A greater degree of stability may be required in the case of large flying boats, depending on the height of the center of gravity above the water level, the area and location of wings and tail surfaces, and other considerations.

03.38 Fuselage.

03.380 Pilot compartment.

03.3800 General. The arrangement of the pilot compartment and its appurtenances shall provide a satisfactory degree of safety and assurance that the pilot will be able to perform all his duties and operate the controls in the correct manner without unreasonable concentration and fatigue.

The primary flight control units listed on Figure 04-14, excluding cables and control rods, shall be so located with respect to the propellers that no portion of the pilot or controls lie in the region between the plane of rotation of any inboard propeller and the surface generated by a line passing through the center of the propeller hub and making an angle of 5° forward or aft of the plane of rotation of the propeller.

03.3801 Vision. The pilot compartment shall be arranged to afford the pilot a sufficiently extensive, clear, and undistorted view for the safe operation of the airplane. There shall be provided a window or portion thereof so arranged that during flight in a moderate rain condition, it can be opened or it will remain or be maintained in a clean condition without continuous attention by the pilot. Under such conditions the pilot shall have an adequate view of the flight path in normal flight and landing, and sufficient protection from the elements that his vision is not impaired. The pilot compartment shall be free of glare and reflections which would interfere with the pilot(s) vision. For airplanes intended for night operation, this shall be demonstrated in night flight tests.

03.38010 Pilot windshield and windows. All glass panes shall be of a non-splintering safety type.

03.3802 Cockpit controls. All cockpit controls shall be so located and, except for the primary controls, identified so as to provide greatest satisfactory convenience in operation including adequate provisions to prevent the possibility of confusion and consequent inadvertent operation. See Figure 03-14 for required sense of motion of cockpit controls. The controls shall be so located and arranged with respect to the pilot's seat that it will be readily possible for the operator to obtain full and unrestricted movement of each control without interference from either the cockpit structure or the operator's clothing when seated.

Identical powerplant controls for the several engines in the case of multi-engine airplanes shall be so located as to prevent any misleading impression as to the engines to which they relate.

COCKPIT CONTROLS

Figure 03-14

Controls	Movement and Actuation
Primary: Aileron	RIGHT (clockwise) for RIGHT WING DOWN
Elevator	REARWARD TO pitch NOSE UP
Rudder	RIGHT pedal forward for NOSE RIGHT
Powerplant: Throttle	FORWARD to OPEN

03.38021 Instruments and markings. See § 03.5200 relative to instrument arrangement. The operational markings, instructions, and placards required for the instruments, controls, etc., are specified in § 03.610.

03.381 Emergency provisions.

03.3811 Protection. The fuselage shall be designed to give every reasonable probability that all the occupants, if they make proper use of belts or harness for which provisions are made in the design, will escape serious injury in the event of the following minor crash conditions, although it is accepted that parts of the airplane may be damaged.

(a) Conditions in which the occupants experience the following ultimate acceleration forces in all combinations are as follows:

Category		N. U.	A.
Upward	0 to:	3.0g	4.5g
Forward	0 to:	9.0g	9.0g
Sideward	0 to:	1.5g	1.5g

(b) For airplanes having retractable landing gear, the fuselage in combination with other portions of the structure shall be designed to afford protection of the occupants in a wheels-up landing with moderate descent velocity*.

(c) For airplanes other than those whose configuration renders the possibility of turnover remote, the fuselage in combination with other portions of the structure shall be designed to afford protection of the occupants in a complete turnover*.

*Note: In cases (b) and (c), a vertical ultimate acceleration of 3g and a friction coefficient of 0.5 at the ground may be assumed.

03.3812. Exits. Closed cabins on airplanes carrying more than 5 persons shall be provided with emergency exits in addition to the one external door required by § 03.3821, consisting of movable windows or panels or of additional external doors which provide a clear and unobstructed opening, the minimum dimensions of which shall be such that a 19 inch by 26 inch ellipse may be completely inscribed therein.

The number of emergency exits required is as follows:

(a) Airplanes with a total seating capacity of more than 5 persons, but not in excess of 15, shall be provided with at least one emergency exit or one suitable door in addition to the main door specified in § 03.3821. This emergency exit, or second door, shall be on the opposite side of the cabin from the main door.

(b) Airplanes with a seating capacity of more than 15 persons shall be provided with an additional emergency exit or door either in the top or side of the cabin for every additional 7 persons or fraction thereof above 15, except that not more than 4 exits, including doors, will be required if the arrangement and dimensions are suitable for quick evacuation of all occupants.

If the pilot compartment is separated from the cabin by a door, it shall have its own exit, but such exit shall not be considered as an emergency exit for the passengers. The exits shall be readily accessible, shall not require exceptional agility of a person using them, and shall be distributed so as to facilitate egress without crowding in all probable attitudes resulting from a crash. Reasonable provisions shall be made against the jamming of exits as a result of fuselage deformation.

The method of opening shall be simple and obvious, and the exits shall be so arranged and/or marked that they may be readily located and operated even in darkness. The proper functioning of exits shall be demonstrated by tests.

03.3812-UA Exits shall be provided that will permit all occupants to quickly bail out with parachutes.

03.3813 Fire precautions.

03.38131 Cabin interiors. In compartments where smoking is to be permitted, the materials of the cabin lining, floors, upholstery, and furnishings shall be sufficiently flame resistant to make ignition by cigarettes or matches improbable. All other compartments shall be placarded against smoking.

03.38132 Combustion heaters. Gasoline operated combustion heater installations shall comply with applicable parts of the powerplant installation requirements covering fire hazards and precautions. All applicable requirements concerning fuel tanks, lines, and exhaust systems shall be considered.

03.382 Personnel and cargo accommodations.

03.3821 Doors. Closed cabins on all airplanes carrying passengers shall be provided with at least one adequate and easily accessible external door. No passenger door shall be so located with respect to the propeller discs as to endanger persons using the door.

03.3822 Seats and berths. All seats and berths and supporting structure shall be designed for a passenger weight of 170 lbs. (190 lbs. with parachute for the acrobatic and utility category) and the maximum load factors corresponding to all specified flight and ground load conditions including the emergency conditions of § 03.3811.

Pilot seats shall be designed for the reactions resulting from the application of the pilot forces to the primary flight controls as specified in § 03.230.

03.3822-UA All seats designed to be occupied in the U and A categories under § 03.113 (c) (4) shall be designed to accommodate passengers.

03.38221 Safety belt or harness provisions. Provisions shall be made at all seats and berths designated as occupiable during take-off and landing for the installation of belts or harness necessary to comply with the emergency conditions of § 03.3811.

03.3823 Cargo compartments. Each cargo compartment shall be designed for the placarded maximum weight of contents and critical load distributions at the appropriate maximum load factors corresponding to all specified flight and ground load conditions. Suitable provisions shall be made to prevent the contents of cargo compartments from becoming a hazard by shifting. Such provisions shall be adequate to protect the passengers from injury by the contents of any cargo compartment when the ultimate forward acting accelerating force is 4.5g.

03.3824 Ventilation. All passenger and crew compartments shall be suitably ventilated. Carbon monoxide concentration shall not exceed one part in 20,000 parts of air.

03.39 Miscellaneous.

03.390 Leveling marks shall be provided for leveling the airplane on the ground.

03.4 POWER PLANT INSTALLATION - RECIPROCATING ENGINES

03.40 General.

(a) The power plant installation shall be considered to include all components of the airplane which are necessary for its propulsion. It shall also be considered to include all components which affect the control of the major propulsive units or which affect their continued safety of operation.

(b) All components of the power plant installation shall be constructed, arranged, and installed in a manner that will assure the continued safe operation of the airplane and power plant. Accessibility shall be provided to permit such inspection and maintenance as is necessary to assure continued airworthiness.

03.41 Engines and propellers.

03.410 Engines. Engines installed in certificated airplanes shall be of a type that has been certificated in accordance with the provisions of Part 13 entitled "Aircraft Engine Airworthiness".

03.411 Propellers.

(a) Propellers installed in certificated airplanes shall be of a type that has been certificated in accordance with the provisions of Part 14 entitled "Aircraft Propeller Airworthiness".

(b) The maximum engine power and propeller shaft rotational speed permissible for use in the particular airplane involved shall not exceed the corresponding limits for which the propeller has been certificated.

03.4110 Propeller vibration. In the case of airplanes equipped with metal propellers, the magnitude of the propeller blade vibration stresses under all normal conditions of operation shall be determined by actual measurements or by comparison with similar installations for which such measurements have been made. The vibration stresses thus determined shall not exceed values that have been demonstrated to be safe for continuous operation. Vibration tests may be waived and the propeller installation accepted on the basis of service experience, engine or ground tests which show adequate margins of safety, or other considerations which satisfactorily substantiate its safety in this respect.

03.4111 Propeller pitch and speed limitations. The propeller pitch and speed shall be limited to values that will assure safe operation under all normal conditions of operation and will assure compliance with the performance requirements specified in § 03.12, Performance, and its related sub-sections.

03.41110 Speed limitations for fixed pitch propellers, ground adjustable pitch propellers, and automatically varying pitch propellers which cannot be controlled in flight:

(a) During take-off and initial climb at best rate-of-climb speed, the propeller, in the case of fixed pitch or ground adjustable

types, shall restrain the engine to a speed not exceeding its maximum permissible take-off speed and, in the case of automatic variable pitch types, shall limit the maximum governed engine RPM to a speed not exceeding the maximum permissible take-off speed. In demonstrating compliance with this provision the engine shall be operated at full throttle or the throttle setting corresponding to the maximum permissible take-off manifold pressure.

(b) During a closed throttle glide at the placard Never Exceed Speed (see § 03.6001), the propeller shall not cause the engine to rotate at a speed in excess of 110% of its maximum allowable continuous speed.

03.41111 Speed and pitch limitations for controllable pitch propellers without constant speed controls. The stops or other means incorporated in the propeller mechanism to restrict the pitch range shall limit

(a) the lowest possible blade pitch to a value that will assure compliance with the provisions of § 03.41110(a) and

(b) the highest possible blade pitch to a value not lower than the flattest blade pitch with which compliance with the provisions of § 03.41110(b) can be demonstrated.

03.41112 Variable pitch propellers with constant speed controls.

(a) Suitable means shall be provided at the governor to limit the speed of the propeller. Such means shall limit the maximum governed engine speed to a value not exceeding its maximum permissible take-off RPM.

(b) The low pitch blade stop, or other means incorporated in the propeller mechanism to restrict the pitch range, shall limit the speed of the propeller to a value not exceeding 102% of the maximum permissible take-off propeller shaft RPM under the following conditions:

(1) Propeller blades set in the lowest possible pitch and the governor inoperative.

(2) Engine operating at take-off manifold pressure with the airplane stationary and with no wind.

03.4112 Propeller clearance. With the airplane loaded to the maximum weight and most adverse center of gravity position and the propeller in the most adverse pitch position, propeller clearances shall not be less than the following unless smaller clearances are properly substantiated for the particular design involved:

(a) Ground clearance:

(1) Seven inches (for airplanes equipped with nose wheel type landing gears) or nine inches (for airplanes equipped with tail wheel type landing gears) with the landing gear statically deflected and the airplane in the level, normal take-off, or taxiing attitude, whichever is most critical.

(2) In addition to (1) above, there shall be positive clearance between the propeller and the ground when, with the airplane in the level take-off attitude, the critical tire is completely deflated and the corresponding landing gear strut is completely bottomed.

(b) Water clearance: 18 inches
(c) Structural clearance:

(1) One inch radial clearance between the blade tips and the airplane structure, or whatever additional radial clearance is necessary to preclude harmful vibration of the propeller or airplane.

(2) One-half inch longitudinal clearance between the propeller blades or cuffs and stationary portions of the airplane. Adequate positive clearance shall be provided between other rotating portions of the propeller or spinner and stationary portions of the airplane.

03.42 Fuel system. The fuel system shall be constructed and arranged in a manner to assure the provision of fuel to each engine at a flow rate and pressure adequate for proper engine functioning under all normal conditions of operation including all maneuvers and acrobatics for which the airplane is intended.

03.421 Fuel system arrangement. Fuel systems shall be so arranged as to permit any one fuel pump to draw fuel from only one tank at a time. Gravity feed systems shall not supply fuel to any one engine from more than one tank at a time unless the tank air spaces are interconnected in such a manner as to assure that all interconnected tanks will feed equally. (See also § 03.4223.)

03.4210 Multi-engine fuel system arrangement. The fuel systems of multi-engine airplanes shall be arranged to permit operation in such a manner that the failure of any one component will not result in the loss of the power of more than one engine. Unless other provisions are made in order to comply with this requirement, the fuel system shall be arranged to permit supplying fuel to each engine through a system entirely independent of any portions of the system supplying fuel to the other engines.

03.4211 Pressure cross feed arrangements. Pressure cross feed lines shall not pass through portions of the airplane devoted to carrying personnel or cargo unless means are provided to permit the flight personnel to shut off the supply of fuel to these lines, or unless any joints, fittings, or other possible sources of leakage installed in such lines are enclosed in a fuel and fume proof enclosure that is ventilated and drained to the exterior of the airplane. Lengths of bare tubing need not be enclosed but shall be protected where necessary against possible inadvertent damage.

03.422 Fuel system operation.

03.4220 Fuel flow rate. The ability of the fuel system to provide the required fuel flow rate and pressure shall be demonstrated when the airplane is in the attitude which represents the most adverse condition

from the standpoint of fuel feed and quantity of unusable fuel in the tank. During this test, fuel shall be delivered to the engine at the applicable flow rate (see § 03.42200, § 03.42201, and § 03.42202) at a pressure not less than the minimum required for proper carburetor operation. The quantity of fuel in the tank being tested shall not exceed the amount established as the unusable fuel supply for that tank (as determined by demonstration of compliance with the provisions of § 03.4221) (see also § 03.423 and § 03.5222) plus whatever minimum quantity of fuel it may be necessary to add for the purpose of conducting the flow test. If a fuel flowmeter is provided, the meter shall be blocked during the flow test and the fuel shall flow through the meter by-pass.

03.42200 Fuel flow rate for gravity feed systems. The fuel flow rate for gravity feed systems (main and reserve supply) shall be 1.2 pounds per hour for each take-off horsepower or 150% of the actual take-off fuel consumption of the engine, whichever is greater.

03.42201 Fuel flow rate for pump systems. The fuel flow rate for pump systems (main and reserve supply) shall be 0.9 pounds per hour for each take-off horsepower or 125% of the actual take-off fuel consumption of the engine, whichever is greater. This flow rate shall be applicable to both the primary engine-driven pump and to emergency pumps and shall be available when the pump is running at the speed at which it would normally be operating during take-off. In the case of hand-operated pumps, this speed shall be considered to be not more than 60 complete cycles (120 single strokes) per minute.

03.42202 Fuel flow rate for auxiliary fuel systems and fuel transfer systems. The provisions of § 03.42200 or § 03.42201, whichever is applicable, shall also apply to auxiliary and transfer systems with the exception of the fact that the required fuel flow rate shall be established upon the basis of maximum continuous power and speed instead of take-off power and speed. A lesser flow rate will be acceptable, however, in the case of a small auxiliary tank feeding into a large main tank provided a suitable placard is installed to require that the auxiliary tank must only be opened to the main tank when a predetermined satisfactory amount of fuel still remains in the main tank.

03.4221 Determination of unusable fuel supply and fuel system operation on low fuel.

(a) The unusable fuel supply for each tank shall be established as not less than the quantity at which the first evidence of malfunctioning occurs under the conditions specified below (see also § 03.423). In the case of airplanes equipped with more than one fuel tank, any tank which is not required to feed the engine in all of the conditions specified below need only be investigated for those flight conditions in which it shall be used and the unusable fuel supply for the particular tank in question shall then be based on the most critical

of those conditions which are found to be applicable. In all such cases, information regarding the conditions under which the full amount of usable fuel in the tank can safely be used shall be made available to the operating personnel by means of a suitable placard or instructions in the Approved Operating Limitations.

Upon presentation of the airplane for test, the applicant shall stipulate the quantity of fuel with which he wishes to demonstrate compliance with this provision and shall also indicate which of the following conditions is most critical from the standpoint of establishing the unusable fuel supply. He shall also indicate the order in which the other conditions are critical from this standpoint:

(1) Level flight at maximum continuous power or the power required for level flight at V_C, whichever is less.

(2) Climb at maximum continuous power at the calculated best angle of climb at minimum weight.

(3) Rapid application of power and subsequent transition to best rate of climb following a power-off glide at 1.3 V_{S_0}.

(4) Sideslips and skids in level flight, climb, and glide under the conditions specified in (1), (2), and (3) above, of the greatest severity likely to be encountered in normal service or in turbulent air.

(b) In the case of Utility category airplanes, there shall be no evidence of malfunctioning during the execution of all approved maneuvers included in the Approved Operating Limitations. During this test the quantity of fuel in each tank shall not exceed the quantity established as the unusable fuel supply, in accordance with (a) above, plus 0.03 gallons for each maximum continuous horsepower for which the airplane is certificated.

(c) In the case of Acrobatic category airplanes, there shall be no evidence of malfunctioning during the execution of all approved maneuvers included in the Approved Operating Limitations. During this test the quantity of fuel in each tank shall not exceed that specified in (b) above.

(d) If an engine can be supplied with fuel from more than one tank, it shall be possible to regain the full power and fuel pressure of that engine in not more than 10 seconds (for single-engine airplanes) or 20 seconds (for multi-engine airplanes) after switching to any full tank after engine malfunctioning becomes apparent due to the deletion of the fuel supply in any tank from which the engine can be fed. Compliance with this provision shall be demonstrated in level flight.

(e) There shall be no evidence of malfunctioning during take-off and climb for one minute at the calculated attitude of best angle of climb at take-off power and minimum weight. At the beginning of this test the quantity of fuel in each tank shall not exceed that specified in (b) above.

03.4222 Fuel system hot weather operation. The fuel system shall be so arranged as to minimize the possibility of the formation of vapor lock in the system under all normal conditions of operation.

03.4223 Flow between interconnected tanks. In the case of gravity feed systems with tanks whose outlets are interconnected, it shall not be possible for fuel to flow between tanks in quantities sufficient to cause an overflow of fuel from the tank vent when the airplane is operated as specified in § 03.4221(a) and the tanks are full.

03.423 Fuel tanks. Fuel tanks shall be capable of withstanding without failure any vibration, inertia, fluid, and structural loads to which they may be subjected in operation. Flexible fuel tank liners shall be of an acceptable type. Integral type fuel tanks shall be provided with adequate facilities for the inspection and repair of the tank interior. The total usable capacity of the fuel tanks shall not be less than one gallon for each 7 maximum continuous rated horsepower for which the airplane is certificated. The unusable capacity shall be considered to be the minimum quantity of fuel that will permit compliance with the provisions of § 03.4221. The fuel quantity indicator shall be adjusted to account for the unusable fuel supply as specified in § 03.5222. If the unusable fuel supply in any tank exceeds 5% of the tank capacity or 1 gallon, whichever is greater, a placard and a suitable notation in the Approved Operating Limitations shall be provided to indicate to the flight personnel that the fuel remaining in the tank when the quantity indicator reads zero cannot be used safely in flight. The weight of the unusable fuel supply shall be included in the empty weight of the airplane.

03.4230 Fuel tank tests.

(a) Fuel tanks shall be capable of withstanding the following pressure tests without failure or leakage. These pressures may be applied in a manner simulating the actual pressure distribution in service:

(1) Conventional metal tanks and non-metallic tanks whose walls are not supported by the airplane structure: A pressure of 3.5 psi or the pressure developed during the maximum ultimate acceleration of the airplane with a full tank, whichever is greater.

(2) Integral tanks: The pressure developed during the maximum limit acceleration of the airplane with a full tank, simultaneously with the application of the critical limit structural loads.

(3) Non-metallic tanks whose walls are supported by the airplane structure: Tanks constructed of an acceptable basic tank material and type of construction and with actual or simulated support conditions, shall be subjected to a pressure of 2 psi for the first tank of a specific design. Subsequent tanks shall be production tested to at least 0.5 psi. The supporting structure shall be designed for the critical loads occurring in the flight or landing strength conditions combined with the fuel pressure loads resulting from the corresponding accelerations.

(b) Tanks with large unsupported or unstiffened flat areas shall be capable of withstanding the following tests without leakage or failure. The complete tank assembly, together with its supports, shall be subjected to a vibration test when mounted in a manner simulating the actual installation. The tank assembly shall be vibrated for 25 hours at an amplitude of not less than 1/32 of an inch while filled 2/3 full of water. The frequency of vibration shall be 90% of the maximum continuous rated speed of the engine unless some other frequency within the normal operating range of speeds of the engine is more critical, in which case the latter speed shall be employed and the time of test shall be adjusted to accomplish the same number of vibration cycles.

In conjunction with the vibration test, the tank assembly shall be rocked through an angle of 15° on either side of the horizontal (30° total) about an axis parallel to the axis of the fuselage. The assembly shall be rocked at the rate of 16 to 20 complete cycles per minute.

(c) Integral tanks which incorporate methods of construction and sealing not previously substantiated by satisfactory test data or service experience shall be capable of withstanding the vibration test specified in (b) above.

(d) Tanks with non-metallic liners shall be subjected to the sloshing portion of the test outlined under (b) above with fuel at room temperature.

In addition, a specimen liner of the same basic construction as that to be used in the airplane shall, when installed in a suitable test tank, satisfactorily withstand the slosh test with fuel at a temperature of 110°F.

03.4231 Fuel tank installation.

(a) The method of support for fuel tanks shall not be such as to concentrate the loads resulting from the weight of the fuel in the tanks. Pads shall be provided to prevent chafing between the tank and its supports. Materials employed for padding shall be non-absorbent or shall be treated to prevent the absorption of fluids. If flexible tank liners are employed, they shall be so supported that the liner is not required to withstand fluid loads. Interior surfaces of compartments for such liners shall be smooth and free of projections which may cause wear of the liner unless provisions are made for protection of the liner at such points or unless the construction of the liner itself provides such protection.

(b) Fuel tank compartments shall be ventilated and drained to prevent the accumulation of inflammable fluids or vapors. Compartments adjacent to tanks which are an integral part of the airplane structure shall also be ventilated and drained.

(c) Fuel tanks shall not be located on the engine side of the firewall. Not less than $\frac{1}{2}$ of an inch of clear air space shall be provided between the fuel tank and the firewall. No portion of engine nacelle skin which lies immediately behind a major air egress opening from the engine compartment shall act as the wall of an integral tank. Fuel tanks shall not be located in personnel compartments except in the case of single-engine airplanes. In such cases fuel tanks whose capacity does not exceed 25 gallons may be located in personnel compartments if adequate ventilation and drainage is provided. In all other cases, fuel tanks shall be isolated from personnel compartments by means of fume and fuel proof enclosures.

03.4232 Fuel tank construction.

03.42320 Fuel tank expansion space. Fuel tanks shall be provided with an expansion space of not less than 2% of the tank capacity, unless the tank vent discharges clear of the aircraft in which case no expansion space will be required. It shall not be possible inadvertently to fill the fuel tank expansion space when the airplane is in the normal ground attitude.

03.42321 Fuel tank sump.

(a) Each tank shall be provided with a drainable sump having a capacity of not less than 0.25% of the tank capacity or 1/16 of a gallon, whichever is greater. The sump may be dispensed with if the fuel system is provided with a sediment bowl that will permit visual ground inspection for accumulations of water or other foreign material. The sediment bowl shall also be readily accessible for drainage. The capacity of the sediment chamber shall not be less than one ounce per each 20 gallons of the fuel tank capacity.

(b) If a fuel tank sump is provided, the capacity specified above shall be effective with the airplane in the normal ground attitude.

(c) If a separate sediment bowl is provided, the fuel tank outlet shall be so located that water will drain from all portions of the tank to the outlet when the airplane is in the ground attitude.

03.42322 Fuel tank filler connection. Fuel tank filler connections shall be marked as specified in § 03.6121.

Provision shall be made to prevent the entrance of spilled fuel into the fuel tank compartment or any portions of the airplane other than the tank itself. The filler cap shall provide a fuel tight seal for the main filler opening. However, small openings in the fuel tank cap for venting purposes or to permit passage of a fuel gauge through the cap shall be permissible.

03.4232 Fuel tank vents and carburetor vapor vents.

(a) Fuel tanks shall be vented from the top portion of the expansion space. Vent outlets shall be so located and constructed as to minimize the possibility of their being obstructed by ice or other foreign matter. The vent shall be so constructed as to preclude the possibility of syphoning fuel during normal operation. The vent shall be of sufficient size to permit the rapid relief of excessive differences of pressure between the interior and exterior of the tank. Air spaces of tanks whose outlets are interconnected shall also be interconnected. There shall be no undrainable points in the vent line where moisture may accumulate with the airplane in either the ground or level flight attitude. Vents shall not terminate at points where the discharge of fuel from the vent outlet will constitute a fire hazard or from which fumes may enter personnel compartments.

(b) Carburetors which are provided with vapor elimination connections shall be provided with a vent line which will lead vapors back to one of the airplane fuel tanks. If more than one fuel tank is provided and it is necessary to use these tanks in a definite sequence for any reason, the vapor vent return line shall lead back to the fuel tank which must be used first unless the relative capacities of the tanks are such that return to another tank is preferable.

03.4232A Fuel tank vents for acrobatic category airplanes. In the case of acrobatic type airplanes, provision shall be made to prevent excessive loss of fuel during acrobatic maneuvers including short periods of inverted flight. It shall not be possible for fuel to syphon from the vent when normal flight has been resumed after having executed any acrobatic maneuver for which the airplane is intended.

03.4232S Fuel tank outlet. The fuel tank outlet shall be provided with a screen of from 8 to 16 meshes per inch. If a finger strainer is used, the length of the strainer shall not be less than 4 times the outlet diameter. The diameter of the strainer shall not be less than the diameter of the fuel tank outlet. Finger strainers shall be accessible for inspection and cleaning.

03.424 Fuel pump and pump installation.

(a) If fuel pumps are provided to maintain a supply of fuel to the engine, at least one pump for each engine shall be directly driven by the engine. Fuel pumps shall be adequate to meet the flow requirements of the applicable portions of § 03.4220 and its related sections.

(b) Emergency fuel pumps shall be provided to permit supplying all engines with fuel in case of the failure of any one engine-driven pump unless the engine-driven pumps have been approved with the engines, in which case emergency pumps need not be provided. Similarly, if an engine fuel injection pump, which has been certificated as an integral part of the engine is used, an emergency pump will not be required. Emergency pumps shall be capable of complying with the same flow requirements as are prescribed for the main pumps. Hand emergency pumps shall not

require excessive effort for their continued operation at the rate of 60 complete cycles (120 single strokes) per minute. Emergency pumps shall be available for immediate use in case of the failure of any other pump.

03.425 Fuel system lines, fittings, and accessories. Fuel lines shall be installed and supported in a manner that will prevent excessive vibration and will be adequate to withstand loads due to fuel pressure and accelerated flight conditions. Lines which are connected to components of the airplane between which relative motion may exist shall incorporate provisions for flexibility. Flexible hose shall be of an acceptable type.

03.4251 Fuel valves.

(a) Means shall be provided to permit the flight personnel to shut off rapidly the flow of fuel to any engine individually in flight. Valves provided for this purpose shall be located on the side of the firewall most remote from the engine.

(b) Shut-off valves shall be so constructed that it is possible for the flight personnel to reopen the valves rapidly after they have once been closed.

(c) Valves shall be provided with either positive stops or feel in the on and off positions and shall be supported in such a manner that loads resulting from their operation or from accelerated flight conditions are not transmitted to the lines connected to the valve. Valves shall be so installed that the effect of gravity and vibration will tend to turn their handles to the open rather than the closed position.

03.4252 Fuel strainer. A fuel strainer shall be provided between the fuel tank outlet and the carburetor inlet. If an engine-driven fuel pump is provided, the strainer shall be located between the tank outlet and the engine driven pump inlet. The strainer shall be accessible for drainage and cleaning, and the strainer screen shall be removable.

03.426 Fuel system drains. Drains shall be provided to permit safe drainage of the entire fuel system and shall incorporate means for locking in the closed position.

03.427 Fuel system instruments. See § 03.51 and § 03.522 through § 03.5223.

03.43 Oil system. Each engine shall be provided with an independent oil system capable of supplying the engine with an ample quantity of oil at a temperature not exceeding the maximum which has been established as safe for continuous operation. The oil capacity of the system shall not be less than one gallon for every 25 gallons of fuel capacity. However, in no case shall the oil capacity be less than one gallon for each 75 maximum continuous horsepower of the engine(s) involved unless lower quantities can be substantiated.

03.430 Oil cooling. See § 03.44 and its related sections.

03.431 Oil tanks. Oil tanks shall be capable of withstanding without failure all vibration, inertia, and fluid loads to which they may be subjected in operation. Flexible oil tank liners shall be of an acceptable type.

03.4310 Oil tank tests. Oil tank tests shall be the same as fuel tank tests (see § 03.4230) except as follows:

(a) The 3.5 psi pressure specified in § 03.4230(a) shall be 5 pounds psi.

(b) In the case of tanks with non-metallic liners, the test fluid shall be oil rather than fuel as specified in § 03.4230(d) and the slosh test on a specimen liner shall be conducted with oil at a temperature of 250°F.

03.4311 Oil tank installation. See § 03.4231(a) and (b).

03.4312 Oil tank construction.

03.43120 Oil tank expansion space. Oil tanks shall be provided with an expansion space of not less than 10% of the tank capacity or $\frac{1}{2}$ gallon, whichever is greater. It shall not be possible inadvertently to fill the oil tank expansion space when the airplane is in the normal ground attitude.

03.43121 Oil tank filler connection. Oil tank filler connections shall be marked as specified in § 03.6121.

03.43122 Oil tank vent. Oil tanks shall be vented to the engine crankcase from the top of the expansion space in such a manner that the vent connection is not covered by oil under any normal flight conditions. Oil tank vents shall be so arranged that condensed water vapor that may freeze and obstruct the line cannot accumulate at any point.

03.43122-A Oil tank vents for acrobatic category airplanes. In the case of acrobatic type airplanes, provision shall be made to prevent hazardous loss of oil during acrobatic maneuvers including short periods of inverted flight.

03.43123 Oil tank outlet. The oil tank outlet shall not be enclosed or covered by any screen or other guard that may impede the flow of oil. The diameter of the oil tank outlet shall not be less than the diameter of the engine oil pump inlet. (See also § 03.436).

03.432 Oil system lines, fittings, and accessories. Oil lines shall comply with the provisions of § 03.425 except that the inside diameter of the engine oil inlet and outlet lines shall not be less than the diameter of the corresponding engine oil pump inlet and outlet.

03.4321 Oil valves. See § 03.49.

03.4322 Oil radiators. Oil radiators and their supports shall be capable of withstanding without failure any vibration, inertia, and oil pressure loads to which they may normally be subjected.

03.4323 Oil filters. If the engine is equipped with an oil filter, the filter shall be constructed or installed in such a manner that complete blocking of the flow through the filter element will not jeopardize the continued operation of the engine oil supply system.

03.433 Oil system drains. Drains shall be provided to permit safe drainage of the entire oil system and shall incorporate means for positive locking in the closed position.

03.434 Engine breather line. Engine breather lines shall be so arranged that condensed water vapor which may freeze and obstruct the line cannot accumulate at any point. Breathers shall discharge in a location which will not constitute a fire hazard in case foaming occurs and so that oil emitted from the line will not impinge upon the pilot's windshield. The breather shall not discharge into the engine air induction system.

03.434-A Engine breather lines for acrobatic category airplanes: In the case of acrobatic type airplanes, provision shall be made to prevent excessive loss of oil from the breather during acrobatic maneuvers including short periods of inverted flight.

03.435 Oil system instruments. See § 03.51, § 03.522 through § 03.5221 and § 03.5224.

03.436 Propeller feathering system. If the propeller feathering system is dependent upon the use of the engine oil supply, provision shall be made to trap a quantity of oil in the tank in case the supply becomes depleted due to failure of any portion of the lubricating system other than the tank itself. The quantity of oil so trapped shall be sufficient to accomplish the feathering operation and shall be available only to the feathering pump. The ability of the system to accomplish feathering when the supply of oil has fallen to the above level shall be demonstrated.

03.44 Cooling. The power plant cooling provisions shall be capable of maintaining the temperatures of all power plant components, engine parts, and engine fluids (oil and coolant), at or below the maximum established safe value under critical conditions of ground and flight operation.

03.440 Cooling tests. Compliance with the provisions of § 03.44 shall be demonstrated under critical ground, water, and flight operating conditions. If the tests are conducted under conditions that deviate from the highest anticipated summer air temperature (see § 03.4400), the recorded power plant temperatures shall be corrected in accordance with the

provisions of § 03.4401 and § 03.4402. The corrected temperatures determined in this manner shall not exceed the maximum established safe values. The fuel used during the cooling tests shall be of the minimum octane number approved for the engines involved, and the mixture settings shall be those used in normal operation. The test procedures shall be as outlined in § 03.4403 and § 03.4404.

03.4400 Maximum anticipated summer air temperatures. The maximum anticipated summer air temperature shall be considered to be 100°F at sea level and to decrease from this value at the rate of 3.6°F per thousand feet of altitude above sea level.

03.4401 Correction factor for cylinder head, oil inlet, carburetor air, and engine coolant inlet temperatures. These temperatures shall be corrected by adding the difference between the maximum anticipated summer air temperature and the temperature of the ambient air at the time of the first occurrence of maximum head, air, oil, or coolant temperature recorded during the cooling test. A correction factor other than 1.0 may be employed if it can be demonstrated to be applicable.

03.4402 Correction factor for cylinder barrel temperatures. Cylinder barrel temperatures shall be corrected by adding 0.7 of the difference between the maximum anticipated summer air temperature and the temperature of the ambient air at the time of the first occurrence of the maximum cylinder barrel temperature recorded during the cooling test. A correction factor other than 0.7 may be employed if it can be demonstrated to be applicable.

03.4403 Cooling test procedure for single-engine airplanes. This test shall be conducted by stabilizing engine temperatures in flight and then starting at the lowest practicable altitude and climbing for one minute at take-off power. At the end of one minute, the climb shall be continued at maximum continuous power until at least 5 minutes after the occurrence of the highest temperature recorded. The climb shall not be conducted at a speed greater than the best rate-of-climb speed with maximum continuous power unless:

(a) the slope of the flight path at the speed chosen for the cooling test is equal to or greater than the minimum required angle of climb (see § 03.123(a)), and

(b) a cylinder head temperature indicator is provided as specified in § 03.5225.

03.4404 Cooling test procedure for multi-engine airplanes.

(a) Airplanes which meet the minimum one-engine inoperative climb performance specified in § 03.123(b): The engine cooling test for these airplanes shall be conducted with the airplane in the configuration

specified in § 03.123(b) except that the operating engine(s) shall be operated at their maximum continuous power or at full throttle when above the critical altitude. After stabilizing temperatures in flight, the climb shall be started at the lower of the two following altitudes and shall be continued until at least 5 minutes after the highest temperature has been recorded:

(1) 1000 feet below the engine critical altitude or at the lowest practicable altitude (when applicable).

(2) 1000 feet below the altitude at which the single-engine inoperative rate of climb is $0.02V_{s_o}{}^2$.

The climb shall be conducted at a speed not in excess of the highest speed at which compliance with the climb requirement of § 03.123(b) can be shown. However, if the speed used exceeds the speed for best rate of climb with one engine inoperative, a cylinder head temperature indicator shall be provided as specified in § 03.5225.

(b) Airplanes which cannot meet the minimum one-engine inoperative climb performance specified in § 03.123-(b): The engine cooling test for these airplanes shall be the same as in (a) above except that, after stabilizing temperatures in flight, the climb (or descent, in the case of airplanes with zero or negative one-engine inoperative rate of climb) shall be commenced at as near sea-level as practicable and shall be conducted at the best rate-of-climb speed (or the speed of minimum rate of descent, in the case of airplanes with zero or negative one-engine inoperative rate of climb).

03.441 Liquid cooling systems. Each liquid cooled engine shall be provided with an independent cooling system. The coolant system shall be so arranged that no air or vapor can be trapped in any portion of the system, except the expansion tank, either during filling or during operation.

03.4410 Coolant tank. A coolant tank shall be provided. The tank capacity shall not be less than one gallon plus 10% of the cooling system capacity. Coolant tanks shall be capable of withstanding without failure all vibration, inertia, and fluid loads to which they may be subjected in operation. Coolant tanks shall be provided with an expansion space of not less than 10% of the total coolant system capacity. It shall not be possible inadvertently to fill the expansion space with the airplane in the normal ground attitude.

03.44100 Coolant tank tests. Coolant tank tests shall be the same as fuel tank tests (see § 03.4230) except as follows:

(a) The 3.5 psi pressure test of § 03.4230(a) shall be replaced by the sum of the pressure developed during the maximum ultimate acceleration with a full tank or a pressure of 3.5 psi,

whichever is greater, plus the maximum working pressure of the system.

(b) In the case of tanks with non-metallic liners, the test fluid shall be coolant rather than fuel as specified in § 03.4230(d), and the slosh test on a specimen liner shall be conducted with coolant at operating temperature.

03.4410l Coolant tank installation. Coolant tanks shall be supported in a manner that distributes the tank loads over a large portion of the tank surface. Pads shall be provided to prevent chafing between the tank and the support. Material used for padding shall be non-absorbent or shall be treated to prevent the absorption of inflammable fluids.

03.4410l2 Coolant tank filler connection. Coolant tank filler connections shall be marked as specified in § 03.6121. Provisions shall be made to prevent the entrance of spilled coolant into the coolant tank compartment or any portions of the airplane other than the tank itself. Recessed coolant filler connections shall be drained and the drain shall discharge clear of all portions of the airplane.

03.4411 Coolant lines, fittings, and accessories. Coolant lines shall comply with the provisions of § 03.425 except that the inside diameter of the engine coolant inlet and outlet lines shall not be less than the diameter of the corresponding engine inlet and outlet connections.

03.44111 Coolant radiators. Coolant radiators shall be capable of withstanding without failure any vibration, inertia, and coolant pressure loads to which they may normally be subjected. Radiators shall be supported in a manner that will permit expansion due to operating temperatures and that will prevent the transmittal of harmful vibration to the radiator. If the coolant employed is inflammable, the air intake duct to the coolant radiator shall be so located that flames issuing from the nacelle in case of fire cannot impinge upon the radiator.

03.4412 Coolant system drains. One or more drains shall be provided to permit drainage of the entire coolant system, including the coolant tank, radiator, and the engine, when the airplane is in the normal ground attitude. Drains shall discharge clear of all portions of the airplane and shall be provided with means for positively locking the drain in the closed position. Coolant system drains shall be accessible.

03.4413 Coolant system instruments. See § 03.51, § 03.522 through § 03.5221.

03.45 Induction system. The engine air induction system shall permit supplying an adequate quantity of air to the engine under all conditions of operation.

Each engine shall be provided with at least 2 separate air intake sources except that, in the case of an engine equipped with a fuel injector, only one air intake source need be provided if the air intake, opening or passage is unobstructed by a screen, filter, or other part on which ice may form and so restrict the airflow as to adversely affect engine operation. Primary and alternate air intakes may open within the cowling only if that portion of the cowling is isolated from the engine accessory section by means of a fire resistant diaphragm. Alternate air intakes shall be located in a sheltered position. Supplying air to the engine through the alternate air intake system or the carburetor air pre-heater shall not result in the loss of excessive power in addition to the power lost due to the rise in the temperature of the air.

03.450 Induction system de-icing and anti-icing provisions. The engine air induction system shall incorporate means for the prevention and elimination of ice accumulations in accordance with the following provisions. It shall be demonstrated that compliance with the provisions outlined in the following paragraphs can be accomplished when the airplane is operating in air at a temperature of 30°F when the air is free of visible moisture. Lesser values may be used if properly substantiated.

(a) Airplanes equipped with sea level engines employing conventional venturi carburetors shall be provided with a preheater capable of providing a heat rise of 90°F when the engine is operating at 75% of its maximum continuous power.

(b) Airplanes equipped with altitude engines employing conventional venturi carburetors shall be provided with a preheater capable of providing a heat rise of 120°F when the engine is operating at 75% of its maximum continuous power.

(c) Airplanes equipped with altitude engines employing carburetors which embody features tending to reduce the possibility of ice formation shall be provided with a preheater capable of providing a heat rise of 100°F when the engine is operating at 60% of its maximum continuous power. However, the preheater need not provide a heat rise in excess of 40°F if a fluid de-icing system complying with the provisions of § 03.4501 through § 03.4503 is also installed.

03.4501 Carburetor de-icing fluid flow rate. The system shall be capable of providing each engine with a rate of fluid flow, expressed in pounds per hour, of not less than 2.5 multiplied by the square root of the maximum continuous power of the engine. This flow shall be available to all engines simultaneously. The fluid shall be introduced into the air induction system at a point close to, and upstream from, the carburetor. The fluid shall be introduced in a manner to assure its equal distribution over the entire cross section of the induction system air passages.

03.4502 Carburetor fluid de-icing system capacity. The fluid de-icing system capacity shall not be less than that required to provide fluid at the rate specified in § 03.4501 for a time equal to 3% of the maximum endurance of the airplane. However, the capacity need not in any case exceed that required for 2 hours of operation nor shall it be less than that required for 20 minutes of operation at the above flow rate. If the available preheat exceeds 50°F but is less than 100°F, it shall be permissible to decrease the capacity of the system in proportion to the heat rise available in excess of 50°F.

03.4503 Carburetor fluid de-icing system detail design. Carburetor fluid de-icing systems shall comply with provisions for the design of fuel systems, except as heretofore specified, unless such provisions are manifestly inapplicable.

03.451 Carburetor air preheater design. Means shall be provided to assure adequate ventilation of the carburetor air preheater when the engine is being operated in cold air. The preheater shall be constructed in such a manner as to permit inspection of exhaust manifold parts which it surrounds and also to permit inspection of critical portions of the preheater itself.

03.452 Induction system ducts. Induction system ducts shall be provided with drains which will prevent the accumulation of fuel or moisture in all normal ground and flight attitudes. No open drains shall be located on the pressure side of turbo-supercharger installations. Drains shall not discharge in a location that will constitute a fire hazard. Ducts which are connected to components of the airplane between which relative motion may exist shall incorporate provisions for flexibility.

03.453 Induction system screens. If induction system screens are employed, they shall be located upstream from the carburetor. It shall not be possible for fuel to impinge upon the screen. Screens shall not be located in portions of the induction system which constitute the only passage through which air may reach the engine unless the available preheat is 100°F or over and the screen is so located that it can be de-iced by the application of heated air. De-icing of screens by means of alcohol in place of heated air shall not be considered acceptable.

03.46 Exhaust system. The exhaust system shall be constructed and arranged in such a manner as to assure the safe disposal of exhaust gases without the existence of a hazard of fire or carbon monoxide contamination of air in personnel compartments.

Unless suitable precautions are taken, exhaust system parts shall not be located in close proximity to portions of any systems carrying inflammable fluids or vapors nor shall they be located under portions of such systems which may be subject to leakage. All exhaust system components shall be separated from adjacent inflammable portions of the airplane

which are outside the engine compartment by means of fire resistant shields. Exhaust gases shall not be discharged at a location that will cause a glare seriously affecting pilot visibility at night, nor shall they discharge within dangerous proximity of any fuel or oil system drains. All exhaust system components shall be ventilated to prevent the existence of points of excessively high temperature.

03.460 Exhaust manifold. Exhaust manifolds shall be made of heat and corrosion resistant materials and shall incorporate provisions to prevent failure due to their expansion when heated to operating temperatures. Exhaust manifolds shall be supported in a manner adequate to withstand all vibration and inertia loads to which they may be subjected in operation. Portions of the manifold which are connected to components between which relative motion may exist shall incorporate provisions for flexibility.

03.461 Exhaust heat exchangers. Exhaust heat exchangers shall be constructed and installed in such a manner as to assure their ability to withstand without failure all vibration, inertia, and other loads to which they may normally be subjected. Heat exchangers shall be constructed of materials that are suitable for continued operation at high temperatures and that are adequately resistant to corrosion due to products contained in exhaust gases.

Provision shall be made for the inspection of all critical portions of exhaust heat exchangers, particularly if a welded construction is employed. Heat exchangers shall be ventilated under all conditions in which they are subject to contact with exhaust gases.

03.4610 Exhaust heat exchangers used in ventilating air heating systems. Heat exchangers of this type shall be so constructed as to preclude the possibility of exhaust gases entering the ventilating air.

03.47 Firewall and cowling.

03.470 Firewalls. All engines and auxiliary power plants which are intended for operation in flight shall be isolated from the remainder of the airplane by means of fire resistant bulkheads unless they are located in a nacelle that is remote from the remainder of the airplane and contains no fuel tanks.

03.4700 Firewall construction. The firewall shall be constructed in such a manner as to minimize the passage of air, fluids, or flame from the engine compartment to other portions of the airplane. All openings in the firewall shall be sealed with close fitting fire resistant grommets, bushings, or firewall fittings.

Firewalls shall be constructed of fire resistant material capable of withstanding a flame temperature of 2000°F for 15 minutes without flame penetration and shall be protected against corrosion. The following materials have been found to comply with this requirement.

(a) Heat and corrosion resistant steel 0.015 inches thick

(b) Low carbon steel, suitably protected against corrosion, 0.018 inches thick

03.471 Cowling. Cowling shall be constructed and supported in such a manner as to be capable of resisting all vibration, inertia, and air loads to which it may normally be subjected. Provision shall be made to permit rapid and complete drainage of all portions of the cowling in all normal ground and flight attitudes. Drains shall not discharge in locations constituting a fire hazard.

Cowling shall be constructed of non-inflammable material. All portions of the airplane lying behind openings in the engine compartment cowling shall also be constructed of non-inflammable materials for a distance of at least 24 inches aft of such openings. Portions of cowling which are subjected to high temperatures due to proximity to exhaust system ports or exhaust gas impingement shall be constructed of heat resistant material.

03.48 Power plant controls and accessories.

03.480 Power plant controls. Power plant controls shall comply with the provisions of § 03.3802 with respect to direction of motion and shall comply with the provisions of § 03.6102 with respect to marking. Controls shall maintain any necessary position without constant attention by the flight personnel and shall not tend to creep due to control loads or vibration. Flexible controls shall be of an acceptable type. Controls shall have adequate strength and rigidity to withstand operating loads without failure or excessive deflection.

03.4800 Throttle controls. A throttle control shall be provided to give independent control for each engine. Throttle controls shall afford a positive and immediately responsive means of controlling the engine(s). Throttle controls shall be grouped and arranged in such a manner as to permit separate control of each engine and also simultaneous control of all engines.

03.4801 Ignition switches. Ignition switches shall provide control for each ignition circuit on each engine. Means shall be provided for quickly shutting off all ignition on multi-engine airplanes, by the grouping of switches or by providing a master ignition control. If a master control is provided, suitable means shall be incorporated to prevent its inadvertent operation.

03.4802 Mixture controls. If mixture controls are provided, a separate control shall be provided for each engine. The controls shall be grouped and arranged in such a manner as to permit separate control of each engine and also simultaneous control of all engines.

03.4803 Propeller speed and pitch controls. (See also § 03.41112(a)). If propeller speed or pitch controls are provided, a separate control shall be provided for each propeller. The controls shall be grouped and

arranged in such a manner as to permit control of the propellers separately and together. The controls shall permit ready synchronization of all propellers on multi-engine airplanes.

03.48030 Propeller feathering controls. If propeller feathering controls are provided, a separate control shall be provided for each propeller. Propeller feathering controls shall be provided with means to prevent inadvertent operation.

03.4804 Fuel system controls. See § 03.4251(c).

03.4805 Carburetor air preheat controls. Separate controls shall be provided to regulate the temperature of the carburetor air for each engine.

03.481 Power plant accessories. Engine-driven accessories shall be of a type satisfactory for installation on the engine involved and shall utilize the provisions made on the engine for the mounting of such units. Items of electrical equipment subject to arcing or sparking shall be installed so as to minimize the possibility of their contact with any inflammable fluids or vapors which may be present in a free state.

03.4810 Engine ignition systems.

(a) Battery ignition systems shall be supplemented with a generator which is automatically made available as an alternate source of electrical energy to permit continued engine operation in the event of the depletion of any battery.

(b) The capacity of batteries and generators shall be sufficient to meet the simultaneous demands of the engine ignition system and the greatest demands of any airplane electrical system components which may draw electrical energy from the same source. Consideration shall be given to the condition of an inoperative generator and to the conditon of a completely depleted battery when the generator is running at its normal operating speed. If only one battery is provided, consideration shall also be given to the condition in which the battery is completely depleted and the generator is operating at idling speed.

(c) Means shall be provided to warn the appropriate flight personnel if malfunctioning of any part of the electrical system is causing the continuous discharging of a battery that is necessary for engine ignition.(See § 03.4801 for ignition switches).

03.49 Power plant fire protection. Suitable means shall be provided to shut off the flow in all lines carrying inflammable fluids into the engine compartment.

03.5 EQUIPMENT

03.50 General. The equipment specified in § 03.51 shall be the minimum installed when the airplane is submitted to determine its compliance with the airworthiness requirements. Such additional equipment as is necessary for a specific type of operation is specified in other pertinent Parts of the CAR, but where necessary, its installation and that of the items mentioned in § 03.51 is covered herein.

03.500 Functional and installational requirements. Each item of equipment which is essential to the safe operation of the airplane shall be of a type and design found to be satisfactory by the Administrator, shall be properly installed, shall function satisfactorily, and shall be adequately labeled as to its identification, function, or operational limitations, or any combination of these, whichever is applicable. Items of equipment for which type certification is required shall have been certificated in accordance with the provisions of Part 15 (or previous regulations) and such other Parts as may be applicable.

03.51 Required basic equipment. The following table shows the required basic equipment items necessary for type and airworthiness certification of an airplane:

(a) Flight and navigation instruments:
- (1) Air speed indicator (See § 03.5210)
- (2) Altimeter
- (3) Magnetic direction indicator (See § 03.5213)

(b) Power plant instruments:

(b-1) For each engine or tank:
- (1) Fuel quantity indicator (See § 03.5222)
- (2) Oil pressure indicator
- (3) Oil temperature indicator
- (4) Tachometer

(b-2) For each engine or tank when required in reference section:
- (1) Carburetor air temperature indicator (See § 03.5226)
- (2) Coolant temperature indicator, liquid cooled engines
- (3) Cylinder head temperature indicator (See § 03.5225)
- (4) Fuel pressure indicator, pump-fed engines
- (5) Manifold pressure indicator for altitude engines
- (6) Oil quantity indicator (See § 03.5224)

(c) Electrical equipment: (when required by reference section)
- (1) Master switch arrangement (See § 03.532)
- (2) Adequate source(s) of electrical energy (See § 03.530 and § 03.531)
- (3) Electrical protective devices (See § 03.533)

(d) Miscellaneous equipment:
- (1) Certificated safety belts for all occupants (Part 15)
- (2) Approved Operating Limitations (See § 03.62)

03.52 Instruments - installation.

03.520 General.

03.5200 Arrangement and visibility of instrument installations. (a) Flight, navigation, and power plant instruments for use by each pilot shall be easily visible to him.

(b) On multi-engine airplanes, identical power plant instruments for the several engines shall be so located as to prevent any misleading impression as to the engines to which they relate.

03.5201 Instrument panel vibration characteristics. The vibration characteristics of instrument panel shall not be such as to cause the accuracy of the instruments to be inadequate or to cause damage to them.

03.521 Flight and navigation instruments.

03.5210 Airspeed indicating system. This system shall be so installed that the airspeed indicator shall indicate true airspeed at sea level under standard conditions to within an allowable installational error of not more than plus or minus 3% of the calibrated air speed or 5 mph, whichever is greater, throughout the operating range of the airplane from V_C to 1.3 V_{S_1} and with flaps both up and down at the latter speed.

03.5211 Airspeed indicator marking. The airspeed indicator shall be marked as specified in § 03.6100.

03.512 Static air vent system. All instruments provided with static air case connections shall be so vented that the influence of airplane speed, the opening and closing of windows, air flow variation, moisture, or other foreign matter will not seriously affect their accuracy.

03.5213 Magnetic direction indicator. The magnetic direction indicator shall be so installed that its accuracy shall not be excessively affected by the airplane's vibration or magnetic fields. After the direction indicator has been compensated, the installation shall be such that the deviation in level flight does not exceed 10° on any heading. A suitable calibration placard shall be provided as specified in § 03.6101.

03.5214 Automatic pilot system. If an automatic pilot system is installed:

(a) The actuating (servo) devices shall be of such design that they can, when necessary, be positively disengaged from operating the control system or be overpowered by the human pilot to enable him to maintain satisfactory control of the airplane.

(b) A satisfactory means shall be provided to indicate readily to the pilot the alignment of the actuating device in relation to the control system which it operates, except when automatic synchronization is provided.

(c) The manually operated control(s) for the system's operation shall be readily accessible to the pilot.

(d) The automatic pilot system shall be of such design and so adjusted that it cannot produce loads in the control system and surfaces greater than those for which they were designed.

03.5215 Gyroscopic indicators (air-driven type). All air-driven gyroscopic instruments installed in airplanes which are certificated for "Instrument Flight Operations" shall derive their energy from a reliable suction source of sufficient capacity to maintain their required accuracy at all speeds above the best rate-of-climb speed. In addition the system shall be so installed as to preclude malfunctioning due to rain, oil, etc. On multi-engine airplanes, the following detail requirements shall be applicable:

(a) Two sources actuated by separate means shall be provided, either one of which shall be of sufficient capacity to operate, at the service ceiling of the airplane in normal cruising condition, all of the air-driven gyroscopic instruments with which the airplane is equipped.

(b) A suitable means shall be provided in the attendant installation where the source lines connect into a common line to select either suction air source for the proper functioning of the instruments should failure of one source or a breakage of one source line occur. When an automatic means to permit simultaneous air flow is provided in the system, a suitable method for maintaining suction shall be provided. In order to indicate which source of energy has failed, a visual means shall be provided to indicate this condition to the flight crew.

03.5216 Suction gauge. When required by § 03.5215(b), the suction guage or equivalent shall be so installed as to indicate readily to the flight crew while in flight, which source of suction is being applied to the air-driven types of gyroscopic instruments.

03.522 Power plant instruments.

03.5220 Operational markings. Instruments shall be marked as specified in § 03.6102.

03.5221 Instrument lines. Power plant instrument lines shall comply with the provisions of § 03.425. In addition, instrument lines carrying inflammable fluids or gases under pressure shall be provided with restricted orifices or equivalent safety devices at the source of the pressure to prevent escape of excessive fluid or gas in case of line failure.

03.5222 Fuel quantity indicator. Means shall be provided to indicate to the flight personnel the quantity of fuel in each tank during flight. Tanks whose outlets and air spaces are interconnected may be considered as one tank and need not be provided with separate indicators. Exposed sight gauges shall be so installed and guarded as to preclude the possibility of breakage or damage. Fuel quantity indicators shall be

calibrated to read zero during level flight when the quantity of fuel remaining in the tank is equal to the unusable fuel supply as defined by § 03.4221.

03.5223. Fuel flowmeter system. When a fuel flowmeter system is installed in the fuel line(s), the metering component shall be of such design as to include a suitable means for by-passing the fuel supply in the event that malfunctioning of the metering component offers a severe restriction to fuel flow.

03.5224 Oil quantity indicator. Ground means, such as a stick guage, shall be provided to indicate the quantity of oil in each tank. If an oil transfer system or a reserve oil supply system is installed, means shall be provided to indicate to the flight personnel the quantity of oil in each tank during flight.

03.5225 Cylinder head temperature indicating system for aircooled engines. A cylinder head temperature indicator shall be provided for each engine on airplanes equipped with cowl flaps. In the case of airplanes which do not have cowl flaps, an indicator shall be provided if compliance with the provisions of § 03.44 is demonstrated at a speed in excess of the speed of best rate of climb (one engine inoperative on multi-engine airplanes).

03.5226 Carburetor air temperature indicating system. A carburetor air temperature indicating system shall be provided for each altitude engine equipped with a preheater that is capable of providing a heat rise in excess of 60°F.

03.53 Electrical systems and equipment - installation. Electrical systems in airplanes shall be free from hazards in themselves, in their method of operation, and in their effects on other parts of the airplane. Electrical equipment shall be of a type and design adequate for the use intended. Electrical systems shall be installed in such a manner that they are suitably protected from fuel, oil, water, other detrimental substances, and mechanical damage.

Items of electrical equipment required for a specific type of operation are listed in other pertinent Parts of the CAR.

03.530 Batteries. When an item of electrical equipment which is essential to the safe operation of the airplane is installed, the battery required shall have sufficient capacity to supply the electrical power necessary for dependable operation of the connected electrical equipment.

03.5300 Protection against acid. If batteries are of such a type that corrosive substance may escape during servicing or flight, means such as a completely enclosed compartment shall be provided to prevent such substances from coming in contact with other parts of the airplane which are essential to safe operation. Batteries shall be accessible for servicing and inspection on the ground.

03.5301 Battery vents. The battery container or compartment shall be vented in such manner that gases released by the battery are carried outside the airplane.

03.531 Generator. Generators shall be capable of delivering their continuous rated power.

03.5310 Generator controls. Generator voltage control equipment shall be capable of dependably regulating the generator output within rated limits.

03.5311 Reverse current cut-out. A generator reverse current cut-out shall disconnect the generator from the battery and other generators when the generator is developing a voltage of such value that current sufficient to cause malfunctioning can flow into the generator.

03.532 Master switch. If electrical equipment is installed, a master switch arrangement shall be provided which will disconnect all sources of electrical power from the main distribution system at a point adjacent to the power sources.

03.5320 Master switch installation. The master switch or its controls shall be so installed that it is easily discernible and accessible to a member of the crew in flight.

03.533 Protective devices. If electrical equipment is installed, protective devices (fuses or circuit breakers) shall be installed in the circuits to all electrical equipment except that such items need not be installed in the main circuits of starter motors or in other circuits where no hazard is presented by their omission.

03.5330 Protective devices installation. Protective devices in circuits essential to safety in flight shall be so located and identified that fuses may be replaced or circuit breakers reset readily in flight.

03.5331 Spare fuses. If fuses are used, one spare of each rating or 50% spare fuses of each rating, whichever is greater, shall be provided.

03.534 Electric cables. If electrical equipment is installed, the connecting cable used shall be in accordance with recognized standards for electric cable of a slow burning type and of suitable capacity.

03.535 Switches. Switches shall be capable of carrying their rated current and shall be of such construction that there is sufficient distance or insulating material between current carrying parts and the housing so that vibration in flight will not cause shorting.

03.5350 Switch installation. Switches shall be so installed as to be readily accessible to the appropriate crew member and shall be suitably labeled as to operation and the circuit controlled.

03.536 Instrument lights. If instrument lights are required, they shall be of such construction that there is sufficient distance or insulating material between current carrying parts and the housing so that vibration in flight will not cause shorting. They shall provide sufficient illumination to make all instruments, switches, etc., easily readable and discernible respectively.

03.5360 Instrument light installation. Instrument lights shall be installed in such a manner that their direct rays are shielded from the pilot's eyes. Direct rays shall not be reflected from the windshield or other surfaces into the pilot's eyes.

03.537 Landing lights. If landing lights are installed, they shall be of a type acceptable to the Administrator.

03.5370 Landing light installation. Landing lights shall be so installed that there is no dangerous glare visible to the pilot and also so that the pilot is not seriously affected by halation. They shall be installed at such a location that they provide adequate illumination for night landing.

03.538 Position lights. If position lights are installed, they shall be of a type certificated in accordance with Part 15 or shall comply with the pertinent provisions of Part 15.

03.5380 Forward position light installation. Forward position lights shall be so installed that, with the airplane in normal flying position, the red light is displayed on the left side and the green light on the right side, each showing unbroken light between two vertical planes whose dihedral angle is 110° when measured to the left and right, respectively, of the airplane from dead ahead. The lights shall be spaced laterally as far apart as practicable.

03.5381 Rear position light installation. The rear position light shall be mounted as far aft as practicable and so installed that unbroken light is directed symmetrically aft in such a manner that the axis of the maximum cone of illumination is parallel to the flight path. In addition, the intersection of the two planes forming dihedral angle A given in Part 15 shall be vertical.

03.5382 Flashing rear position lights. If red and white flashing lights are used, in addition to meeting the installation requirements above, they shall be located as close together as possible.

03.539 Riding light. When a riding (anchor) light is required for seaplanes and amphibians, at least one light shall be provided and it shall be capable of showing a white light for at least 2 miles at night under clear atmospheric conditions.

03.5390 Riding light installation. Riding lights shall be so installed that they will show the maximum unbroken light practicable when the airplane is moored or drifting on the water. Externally hung lights are permitted.

03.54 Safety equipment - installation.

03.540 Marking. Required safety equipment which the crew is expected to operate at the time of an emergency, such as flares, automatic life raft releases, etc., shall be readily accessible and plainly marked as to its method of operation. When such equipment is carried in lockers, compartments, etc., such storage places shall be marked for the benefit of passengers and crew.

03.541 De-icers. When pneumatic de-icers are installed, the installation shall be in accordance with approved data. Positive means shall be provided for the deflation of the pneumatic boots.

03.542 Flares.

03.5420 Flare requirements. When parachute flares are required, they shall be of a type certificated in accordance with Part 15.

03.5421 Flare installation. Parachute flares shall be releaseable from the pilot compartment and so installed that danger from accidental discharge is reduced to a minimum. The installation shall be demonstrated, in flight, satisfactorily to eject flares except in those cases where inspection indicates a ground test will be adequate. If the flares are ejected so that recoil loads are involved, structural provisions for such loads shall be made.

03.543 Safety belts. Safety belts shall be of a type certificated in accordance with Part 15. They shall be so attached that no part of the anchorage will fail at a lower load than that specified in § 03.3811.

03.544 Emergency flotation and signaling equipment.

03.5440 Requirement. An approved life raft or approved life preserver when required by Part 43, is one approved by either the Administrator, the Bureau of Marine Inspection and Navigation, the U. S. Army Air Forces, or the Bureau of Aeronautics, Navy Department.

03.5441 Installation of rafts and life preservers. When such emergency equipment is required, it shall be so installed as to be readily available to the crew and passengers. Rafts released automatically or by the pilot shall be attached to the airplane by means of a line to keep them adjacent to the airplane. The strength of the line shall be such that it will break before submerging the empty raft.

03.5442 Signaling device. Signaling devices, when required by Part 43, shall be accessible, shall function satisfactorily, and be free from any hazard in their operation.

03.55 Radio equipment - installation.

03.550 General. Radio equipment and installations in the airplane shall be free from hazards in themselves, in their method of operation, and in their effects on other components of the airplane.

03.56 Miscellaneous equipment - installation.

03.560 Accessories for multi-engine airplanes. Engine driven accessories essential to the safe operation of the airplane shall be so installed as to continue to operate despite the failure of any one engine.

03.561 Hydraulic systems.

03.5610 General. Hydraulic systems and elements shall be so designed as to withstand, without exceeding the yield point, any structural loads which may be imposed in addition to the hydraulic loads.

03.5611 Tests. Hydraulic systems shall be substantiated by proof pressure tests. When proof tested, no part of the hydraulic systems shall fail, malfunction, or experience a permanent set. The proof load of any system shall be 1.5 times the maximum operating pressure of that system.

03.5612 Lines. All hydraulic oil lines carrying inflammable fluids into a designated fire zone shall be constructed in accordance with § 03.49.

03.5613 Accumulators. Hydraulic accumulators or pressurized reservoirs shall not be installed on the engine side of the firewall.

03.6 OPERATING LIMITATIONS AND INFORMATION

03.6 Operating limitations and information. Means shall be provided by which the pilot and other appropriate crew members are adequately informed of all operating limitations upon which the type design is based. Any other information concerning the airplane found by the Administrator to be necessary for safety during its operation shall also be made available to the crew.

03.60 Limitations. The operating limitations specified in the following subsections and any similar limitations shall be established for any airplane and made available to the operator as further described in § 03.61 and § 03.62, unless its design is such that they are unnecessary for safe operation.

03.600 Airspeed. The following airspeed limitations shall be established:

03.6001 Never exceed speed. (V_{ne}) This speed shall not exceed the lesser of the following:

(a) 0.9 V_d chosen in accordance with § 03.2110,
(b) 0.9 times the maximum speed demonstrated in accordance with § 03.15, but shall not be less than 0.9 times the minimum value of V_d permitted by § 03.2110.

03.6002 Maximum structural cruising speed. This operating limitation shall be:

(1) not greater than V_c chosen in accordance with § 03.2110,
(2) not greater than 0.89 times V_{ne} established under § 03.6001,
(3) not less than the minimum V_c permitted in § 03.2110.

03.6003 Maneuvering speed. (See § 03.2110)

03.6004 Flaps extended speed. This speed shall not exceed the lesser of the following:

(a) The design flap speed, V_f, chosen in accordance with § 03.212,
(b) The flap design speed chosen in accordance with § 03.224, but shall not be less than the minimum value of flap design speed permitted in § 03.212 and § 03.224.

03.6005 Minimum control speed (See § 03.1312).

03.601 Power plant. The following power plant limitations shall be established and shall not exceed the corresponding limits established as a part of the type certification of the engine and propeller installed in the airplane.

03.6011 Take-off operation.

(a) Maximum rotational speed (RPM)
(b) Maximum permissible manifold pressure, if applicable
(c) The time limit upon the use of the corresponding power
(d) Where the time limit of Item (c) exceeds 2 minutes, the maximum allowable cylinder head or cooland outlet, and oil temperatures

03.6012 Maximum continuous operation.

(a) Maximum rotational speed (RPM)
(b) Maximum permissible manifold pressure, if applicable
(c) Maximum allowable cylinder head or coolant outlet, and oil temperatures

03.6013 Fuel octane rating. The minimum octane rating of fuel required for satisfactory operation of the power plant at the limits of § 03.6011 and § 03.6012.

03.602 Airplane weight. The airplane weight and c. g. limitations are those required to be determined by § 03.11.

03.603 Minimum flight crew. The minimum flight crew shall be established as that number of persons required for the safe operation of the airplane during any contact flight as determined by the availability and satisfactory operation of all necessary controls by each operator concerned.

03.604 Types of operation. The type of operation to which the airplane is limited shall be established by the category in which it has been found eligible for certification and by the equipment installed. (See Part 43 and other pertinent Parts of the CAR.)

03.61 Markings and placards. The markings and placards specified are required for all airplanes. Placards shall be displayed in a conspicuous place and both shall be such that they may not be easily erased, disfigured, or obscured. Additional information placards and instrument markings having a direct and important bearing on safe operation may be required when unusual design, operating, or handling characteristics so warrant.

03.610 Instrument markings. The instruments listed below shall have the following limitations marked thereon. When these markings are placed on the cover glass of the instrument, adequate provisions shall be made to maintain the correct alignment of the glass cover with the face dial. All arcs and lines shall be of sufficient width and so located as to be clearly and easily visible to the pilot.

03.6100 Airspeed indicator. True indicated airspeed shall be used.

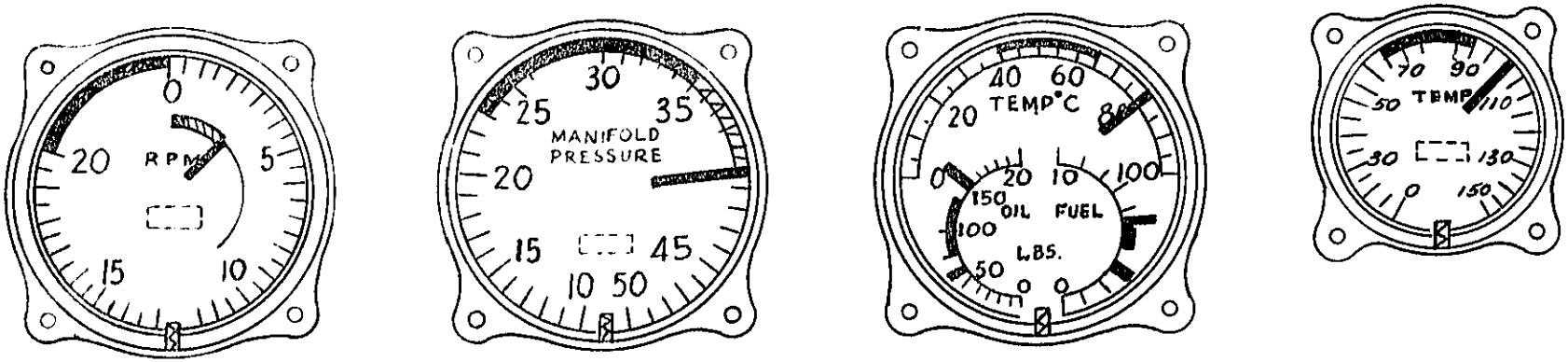

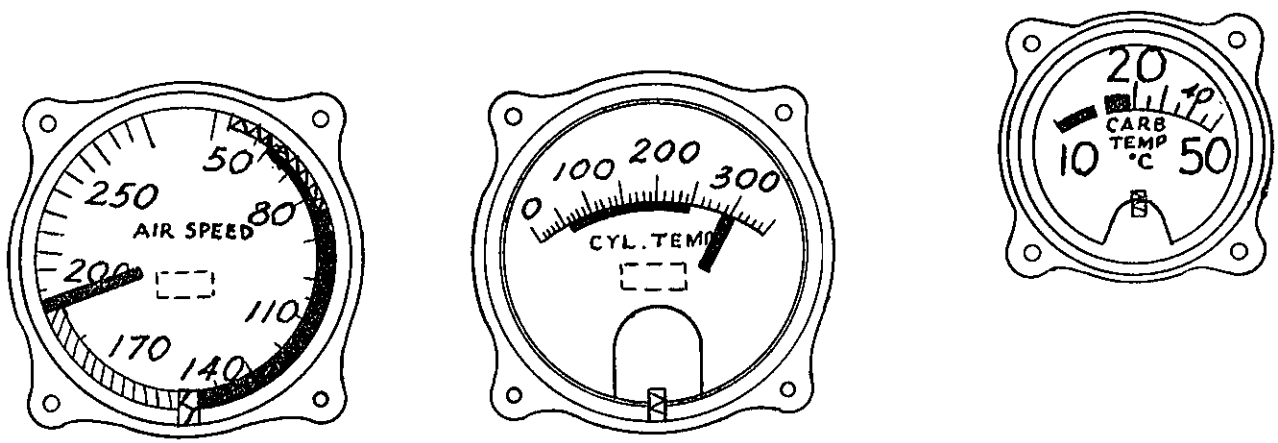

FIG 04 -15
REPRESENTATIVE INSTRUMENT MARKINGS

(a) The Never Exceed speed, V_{ne}, - a radial red line (See § 03.6001).

(b) The caution range - a yellow arc extending from the red line in (a) above to the upper limit of the green arc specified in (c) below.

(c) The normal operating range - a green arc with the lower limit at V_{s_1}, as determined in § 03.121 with maximum weight, landing gear and wing flaps retracted, and the upper limit at the Maximum Structural Cruising speed established in § 03.6002.

(d) The flap operating range - a white arc with the lower limit at V_{s_0} as determined in § 03.121 at the maximum weight, and the upper limit at the flaps extended speed in § 03.6004.

When the Never Exceed and Maximum Structural Cruising speeds vary with altitude, means shall be provided which will indicate the appropriate limitation to the pilot throughout the operating altitude range.

03.6101 Magnetic direction indicator. A placard shall be installed on or in close proximity to the magnetic direction indicator which contains the calibration of the instrument in a level flight attitude with engine(s) operating and radio receiver(s) on or off (which shall be stated). The calibration readings shall be those to known magnetic headings in not less than 30° increments.

03.6102 Powerplant instruments. All required powerplant instruments shall be marked with a red radial line at the maximum, and minimum (if applicable) indications for safe operation. The normal operating ranges shall be marked with a green arc which shall not extend beyond the maximum and minimum limits for continuous operation. Take-off and precautionary ranges shall be marked with a yellow arc.

03.6103 Oil quantity indicators. Indicators shall be suitably marked in sufficient increments so that they will readily and accurately indicate the quantity of oil.

03.6104 Fuel quantity indicator. When the unusable fuel supply for any tank exceeds 1 gallon or 5% of the tank capacity, whichever is greater, a red band shall be placed on the indicator which extends from the calibrated zero reading (see § 03.4221) to the lowest reading obtainable in the level flight attitude, and a suitable notation in the Approved Operating Limitations shall be provided to indicate to the flight personnel that the fuel remaining in the tank when the quantity indicator reaches zero cannot be used safely in flight. (See § 03.5222).

03.611 Control markings. All cockpit controls, with the exception of the primary flight controls, shall be plainly marked and/or identified as to their function and method of operation.

03.6110 Aerodynamic controls. The secondary controls shall be suitably marked to comply with § 03.352 and § 03.353.

03.6111 Powerplant fuel controls.

(a) Controls for fuel tank selector valves shall be marked to indicate the position corresponding to each tank and any cross feed positions that may exist.

(b) When more than one fuel tank is provided, and if safe operation depends upon the use of tanks in a specific sequence, the fuel tank selector controls shall be marked adjacent to or on the control to indicate to the flight personnel the order in which the tanks should be used.

(c) On multi-engine airplanes, controls for engine valves shall be marked to indicate the position corresponding to each engine.

(d) The capacity of each tank shall be indicated adjacent to or on the fuel tank selector control.

03.6112 Accessory and auxiliary controls.

(a) When a retractable landing gear is used, the visual indicator required in § 03.3622 shall be marked in such a manner that the pilot, at all times, can ascertain when the wheels are secured in either extreme position.

(b) Emergency controls shall be colored red and clearly marked as to their method of operation.

03.612 Miscellaneous markings and placards.

03.6120 Baggage compartments, ballast location, and special seat loading limitations.

(a) Each baggage or cargo compartment and ballast location shall bear a placard which states the maximum allowable weight of contents and, if applicable, any special limitation of contents due to loading requirements, etc.

(b) When the maximum permissible weight to be carried in a seat is less than 170 lbs. (see § 03.113), a placard shall be permanently attached to the seat structure which states the maximum allowable weight of occupant to be carried.

03.6121 Fuel, oil, and coolant filler openings. The following information shall be marked on or adjacent to the filler cover in each case:

(a) The word "fuel", the minimum permissible fuel octane number for the engines installed, and the usable fuel tank capacity (See § 03.4221)

(b) The word "oil" and the oil tank capacity

(c) The name of the proper coolant fluid and the capacity of the coolant system.

03.6122 Emergency exit placards. Emergency exit placards and operating controls shall be colored red. A placard shall be located adjacent to the control(s) which clearly indicates it to be an emergency exit and describes the method of operation. (See § 03.3812).

03.6123 Approved flight maneuvers.

03.6123-N A placard shall be provided in front of and in clear view of the pilot stating: "No acrobatic maneuvers including spins approved".

03.6123-U A placard shall be provided in front of and in clear view of the pilot stating: "No acrobatic maneuvers approved except those listed below:

Maneuver	Entry Speed
*	*

(List here all authorized maneuvers and the recommended entry airspeeds.)

03.6123-A A placard shall be provided in clear view of the pilot which lists all approved acrobatic maneuvers and the recommended entry airspeed for each. If inverted flight maneuvers are not approved, then the placard shall bear a notation to this effect.

03.6124 Weight and loading distribution placard. A placard shall be provided in front of and in clear view of the pilot(s) stating: "This airplane must be operated in compliance with the Approved Operating Limitations".

03.62 Approved Operating Limitations. "Approved Operating Limitations" shall be furnished with each airplane. The portions of this document listed below shall be verified and approved by the Administrator. Additional items of information having a direct and important bearing on safe operation may be required when unusual design, operating, or handling characteristics so warrant.

03.620 Operating limitations.

(a) Airspeed limitations - Sufficient information shall be included to permit proper marking of the airspeed limitations on the indicator as required in § 03.6100. It shall also include the design maneuvering speed and the maximum safe airspeed at which the landing gear can be safely lowered. In addition to the above information, the significance of the airspeed limitations and of the color coding used shall be explained.

(b) Powerplant limitations - Sufficient information shall be included to outline and explain all powerplant limitations (see § 03.601) and to permit marking the instruments as required in § 03.6102.

(c) Weight - The following information shall be included:

(1) Maximum weight for which the airplane has been certificated

(2) Airplane empty weight and center of gravity location

(3) Useful load

(4) The composition of the useful load, including the total weight of fuel and oil with tanks full.

(d) Load distribution - All authorized c. g. limits shall be stated. If the available space for loading the airplane is adequately placarded or so arranged that any reasonable distribution of the useful load listed in weight above will not result in a c. g. location outside of the stated limits, this section need not include any other information than the statement of c. g. limits.

In all other cases this section shall also include adequate information to indicate satisfactory loading combinations which will assure maintaining the c. g. position within approved limits.

(e) Maneuvers - All authorized maneuvers and the appropriate airspeed limitations as well as all unauthorized maneuvers shall be included in accordance with the following:

Normal category - All acrobatic maneuvers, including spins, are unauthorized. If the airplane has been demonstrated to be characteristically incapable of spinning in accordance with § 03.1350-NU, a statement to this effect shall be entered here.

Utility category - All authorized maneuvers demonstrated in the type flight tests shall be listed, together with recommended entry speeds. All other maneuvers are not approved. If the airplane has been demonstrated to be characteristically incapable of spinning in accordance with § 03.1350-NU, a statement to this effect shall be entered here.

Acrobatic category - All approved flight maneuvers demonstrated in the type flight tests shall be included, together with recommended entry speeds.

(f) Flight load factor - The positive limit load factors made good by the airplane structure shall be described here in terms of accelerations.

(g) Flight crew - When a flight crew of more than one is required to operate the airplane safely, the number and functions of the minimum flight crew shall be included.

03.621 Operating procedures. This section shall contain information concerning normal and emergency procedures and other pertinent information peculiar to the airplane's operating characteristics which are necessary to safe operation.

03.622 Performance information. Information relative to the following items of performance shall be included:

(1) The stalling speed, V_{S_o}, at maximum weight

(2) The stalling speed, V_{S_1}, at maximum weight and with landing gear and wing flaps retracted

(3) The take-off distance determined in accordance with § 03.122, including the air speed at the 50 foot height, and the airplane configuration, if pertinent

(4) The landing distance determined in accordance with § 03.124, including the airplane configuration, if pertinent

(5) The steady rate of climb determined in accordance with § 03.123 (a) or (b), as appropriate and (c), including the airspeed, power, and airplane configuration, if pertinent.

The effect of variation in (2) with angle of bank up to 60° shall be included.

The calculated approximate effect of variations in (3), (4), and (5) with altitude and temperature shall be included.

03.7 IDENTIFICATION DATA

03.70 Nameplate. A nameplate shall be securely attached to and located in the pilot compartment which shall contain:

(a) The manufacturer's name and address
(b) Model and serial numbers
(c) Date of manufacture
(d) Type certificate number

03.71 Airworthiness certificate number. The identifying symbols and registration numbers shall be permanently affixed to the airplane structure in compliance with Part 43.102.