U. S. DEPARTMENT OF COMMERCE
DANIEL C. ROPER, Secretary

BUREAU OF AIR COMMERCE
FRED D. FAGG, Jr., Director

CIVIL AIR REGULATIONS

04.—AIRPLANE AIRWORTHINESS

Effective November 1, 1937

UNITED STATES
GOVERNMENT PRINTING OFFICE
WASHINGTON : 1937

CONTENTS

04.—AIRPLANE AIRWORTHINESS

		Page
04.0	**General**	1
04.00	Scope	1
04.01	Classification	1
04.02	Airworthiness requisites	1
04.03	Technical data required	2
04.04	Procedure (airworthiness certificate only)	3
04.05	Procedure (type certificate)	3
04.06	Changes, repair and alteration	5
04.1	**Definitions**	6
04.2	**Structural loading conditions**	8
04.20	General structural requirements	8
04.21	Flight loads	9
04.22	Control surface loads	13
04.23	Control system loads	15
04.24	Ground loads	16
04.25	Water loads	17
04.26	Special loading conditions	20
04.27	Multiplying factors of safety	21
04.3	**Proof of structure**	22
04.30	General	22
04.31	Wings	23
04.32	Tail and control surfaces	24
04.33	Control systems	24
04.34	Landing gear	25
04.35	Hulls and floats	25
04.36	Fuselages and engine mounts	25
04.37	Fittings and parts	25
04.4	**Detail design and construction**	25
04.40	General	25
04.41	Wings	27
04.42	Tail and control surfaces	28
04.43	Control systems	29
04.44	Landing gear	30
04.45	Hulls and floats	31
04.46	Fuselage and cabins	32
04.5	**Equipment**	33
04.50	General	34
04.51	Non-airline carriers	34
04.52	Airline carriers (goods)	36
04.53	Airline carriers (passengers)	36
04.54	----------	37
04.55	----------	37
04.56	----------	37
04.57	----------	37
04.58	Installation requirements	37
04.6	**Powerplant installation**	39
04.60	Engines	39
04.61	Propellers	39
04.62	Fuel systems	40
04.63	Lubrication systems	41
04.64	Cooling systems	42
04.65	Powerplant instruments, controls and accessories	42
04.66	Manifolding, cowling and firewall	43
04.67	----------	44
04.68	----------	44
04.69	Miscellaneous powerplant requirements	44

Page

04.7 Performance 44
04.70 Requirements 44
04.71 Requirements (airline carriers) 45
04.72 Tests 46
04.73 Tests (airline carriers) 47
04.74 Operation limitations 48

04.8 49

04.9 Miscellaneous requirements 49
04.90 Standard weights 49
04.91 Leveling means 49

Tables 49
Table 04–1 Symmetrical flight conditions (Flaps retracted) 49
Table 04–2 Symmetrical flight conditions (Flaps extended) 50
Table 04–3 Loading conditions for horizontal tail surfaces 50
Table 04–4 Loading conditions for vertical tail surfaces 51
Table 04–5 Loading conditions for ailerons 51
Table 04–6 Loading conditions for control systems 52
Table 04–7 Additional (Multiplying) factors of safety 52

Figures 53
Fig. 04–1 Gliding speed factor 53
Fig. 04–2 Pull-up speed factor 53
Fig. 04–3 Maneuvering load factor increment, Condition I 54
Fig. 04–4 "Balancing" distribution—horizontal tail 55
Fig. 04–5 "Maneuvering" tail load distribution 55
Fig. 04–6 "Damping" tail load distribution 55
Fig. 04–7 Aileron load distribution 55
Fig. 04–8 Elevator control force limits 56
Fig. 04–9 Aileron control force limits 56
Fig. 04–10 Limit load factors for level and 3-point landing conditions 57

CIVIL AIR REGULATIONS

04.—AIRPLANE AIRWORTHINESS

04.0—GENERAL.

04.00—Scope.—Pursuant to the provisions of the Air Commerce Act requiring the Secretary of Commerce to provide for the rating of aircraft as to their airworthiness, the requirements hereinafter set forth shall be used as a minimum basis for establishing such rating for airplanes.

04.000—AIRWORTHINESS CERTIFICATE.—The general requirements for the issuance of an airworthiness certificate, and other information concerning such certificates, are set forth in CAR 01. The airworthiness requirements which shall be used as a basis for the certification of airplanes are specified hereinafter. (See 04.003.)

04.001—TYPE CERTIFICATE.—The general requirements for the issuance of a type certificate are set forth in CAR 01. In addition to the requirements hereinafter specified for an airworthiness certificate, the special requirements designated as (TC) shall apply when a type certificate is sought.

04.002—PRODUCTION CERTIFICATE.—The requirements for the issuance of, and the procedure for obtaining, a production certificate are set forth in CAR 01.

04.003—DEVIATIONS.—These requirements are based on the present development in the science of airplane design. Experience indicates that, when applied to conventional types of construction, they will result in an airworthy and well-proportioned aircraft. New types of aircraft and new types of construction may, however, incorporate features to which these requirements cannot be logically applied. In such cases, special consideration will have to be given the particular new problems involved. In cases where the deviation from conventional practice is small, approval may be granted if sufficient evidence is submitted to show that the proposed deviation will not be detrimental to the airworthiness of the design. When the deviation from conventional practice is considerable, special rulings covering the feature or features in question shall be obtained from the Secretary.

04.01—Classification of Airplanes.—For the purpose of applying these requirements, airplanes are classified as follows:

(*a*) Normal—airplanes not included in class (*b*) below.

(*b*) Light—airplanes having a gross weight of less than 1,000 pounds and a wing loading of not more than 6 pounds per square foot.

04.010—Such airplanes are further classified as:

(*a*) Landplanes.

(*b*) Seaplanes (Boat and Float Seaplanes).

(*c*) Amphibions (combination of (*a*) and (*b*)).

(See also CAR 01 for classification as to operation.)

04.02—Airworthiness Requisites.—As a basis for an airworthiness rating, compliance with the quantitative and qualitative requirements herein with respect to the following factors shall be demonstrated to the Bureau in a manner satisfactory to the Secretary:

(*a*) The structural strength of wing, tail and control surfaces, fuselage, engine mount, nacelles, fittings, control system and landing gear. (See CAR 04.2 and CAR 04.3.)

(*b*) Pilot compartment, cabin and control arrangements. (See CAR 04.4 and CAR 04.5.)

(*c*) Powerplant and powerplant installation. (See CAR 04.6.)

(*d*) Equipment and instruments. (See CAR 04.5.)
(*e*) Propellers. (See CAR 04.6.)
(*f*) Detail design. (See CAR 04.4.)
(*g*) Materials and workmanship. (See CAR 04.400.)
(*h*) Flying characteristics and qualities. (See CAR 04.7.)
(*i*) Safety features. (See CAR 04.4 and CAR 04.5.)

04.03—Technical Data Required.—When technical data are submitted as a basis for an airworthiness rating they shall include information which, in conjunction with suitable inspection and test procedure, will enable the Secretary to establish such rating.

04.030—Submission to Branch Office.—When data are submitted to a branch office of the Bureau, an extra copy of the three-view drawing, main assemblies and installations, drawing lists, applications and reports shall be included for the Washington office files.

04.031—Data Required for Airworthiness Certificate.—The minimum data required as a basis for the issuance of an airworthiness certificate for a specific single airplane for which a type certificate is not sought or has not previously been issued, are as follows:

(*a*) A three-view drawing of the airplane, to a designated scale, specifying the external dimensions, manufacturer's designation, engine model designation, design weight, empty weight, wing and control surface areas, seating arrangement, fuel and oil capacity, baggage capacity (in pounds) and equipment supplied.

(*b*) Such additional technical data as are deemed necessary by the Secretary to show compliance with the requirements of CAR 04.02.

04.032—Data Required for Type Certificate (TC).—As a basis for type certification, the following technical data shall be submitted.

04.0320—*(TC) Drawings.*—A set of drawings shall be submitted in blueprint form, or equivalent. Drawings shall be folded to a size approximately 9" x 12", and shall contain at least the following information:

(*a*) The manufacturer's designation of the original model to which each drawing applies.

(*b*) All dimensions essential to the reproduction of an identical airplane in respect to structural strength and dimensions.

(*c*) All dimensions essential for checking the structural analysis required in 04.0327.

(*d*) Specifications of all materials used in the primary structure (See CAR 04.131), including the guaranteed physical properties in the case of materials the strength properties of which are developed through manufacturing processes, and specifications of all bolts, nuts, rivets and similar standard parts essential to the strength of the structure.

(*e*) Details of the primary structure, seating arrangement, exits, control systems, powerplant installations, equipment installations, and other factors affecting the airworthiness of the airplane, except that adequate photographs may be substituted for drawings of the powerplant installation, including cooling and exhaust systems. Such photographs shall be made from marked negatives indicating the dimensions and materials of the piping and fittings. In any case diagrammatic layouts of the fuel and oil systems shall be submitted.

(*f*) Revision blocks stating the nature of the revision and the date it was made, and the serial number of the first airplane manufactured in accordance with the revision.

(*g*) A three-view drawing of the airplane, to a designated scale, specifying only the external dimensions of the airplane (including dimensions and areas of wing and control surfaces) and the airplane and engine model designations.

04.0321—*(TC) Drawing List.*—A drawing list shall be submitted in duplicate, listing in numerical order or by suitable classification the number, title and original date of each drawing submitted under CAR 04.032. The drawing list shall include references to all drawings originally submitted in connection with applications for airworthiness rating of other models and which apply to the model in question without change. The drawing list shall also indicate, by letter, the latest revision of each revised drawing.

04.0322—(*TC*) *Equipment Lists.*—Lists specifying the equipment supplied with each airplane shall be submitted. The location, weight, and model designation of each item of equipment, including the additional weight necessary for installation shall be specified.

04.0323—(*TC*) *Preliminary Weight and Balance Report.*—A report shall be submitted in which the range of center of gravity locations for which rating is sought is determined versus weight and with respect to suitable reference planes or lines.

04.0324—(*TC*) *Balance Diagram.*—The report required in CAR 04.0323 shall include a diagram showing the location of the centers of gravity of the component parts of the airplane and its contents, and the location of a suitable reference chord for the wing system, and the location of the assumed center of pressure of the horizontal tail. The locations of the above items shall be indicated by reference to suitable horizontal and vertical planes.

04.0325—(*TC*) *Weight Table.*—The report required in CAR 04.0323 shall include a table or list of the weights of all component parts of the airplane and its contents.

04.0326—(*TC*) *Structural Report.*—A structural report shall be submitted in which the strength of the structure is determined with reference to the strength requirements hereinafter specified. The structural report shall include the computations of the required *limit* loads and shall demonstrate the ability of the structure to develop the required factors of safety with respect to these loads either by analytical methods satisfactory to the Secretary or by reference to authenticated test data, or by a combination of both. (See CAR 04.3.) The structural report shall also include all computations necessary to prove compliance with the miscellaneous requirements hereinafter specified.

04.0327—(*TC*) *Structural Analysis.*—Computations submitted as part of the structural report shall include a table, or tables, including the minimum margins of safety computed for all structural members and shall bear the signature of the responsible engineer or engineers.

04.0328—(*TC*) *Test Reports.*—Test reports submitted as a part of, or referred to in, the structural report shall bear the signature of the Secretary's representative who witnessed the tests, except in the case of minor tests, in which case the applicant's certification that the report accurately represents the complete results of the tests will be accepted.

04.04—Procedure When Airworthiness Certificate Only Is Sought. (See also CAR 01.)

04.040—General.—The applicant shall prove, to the satisfaction of the Secretary, compliance with all pertinent airworthiness requirements. (See CAR 04.02.) The proofs submitted by the applicant shall include such computations as are necessary to determine the exact application of the airworthiness requirements to the airplane in question.

04.041—Structural Inspection.—An official representative of the Secretary will conduct such inspections of the structure and methods of fabrication as are deemed necessary by the Secretary prior to completion of the airplane and will witness structural tests in compliance with these regulations. (See CAR 04.3023.)

04.042—Flight Tests.—The airplane shall be subjected to such flight tests as are deemed necessary by the Secretary to prove compliance with the flight and operation requirements specified in CAR 04.7.

04.05—Procedure for Type Certificate.

04.050—Examination of Data.

04.0500—*Partial Data.*—Arrangements may be made with the Bureau for examination of the required technical data in partial units prior to the receipt of a complete file provided that each such unit is complete in itself, and further provided that there is no unreasonable time interval between the receipt by the Bureau of the various units necessary to complete the file.

04.0501—*Discontinuance of Examination.*—Examination of any technical data, including drawings, submitted in connection with an application for airworthiness rating, will be discontinued if errors, omissions, or lack of references are found which, in the opinion of the Secretary, render the data unsatisfactory as a basis for proving compliance with the airworthiness requirements. The examination will be continued upon correction of the data to the Secretary's satisfaction. Minor errors and omissions, the effects of which can be readily evaluated, will not constitute cause of discontinuing examination of technical data.

04.051—STRUCTURAL INSPECTION.—An official representative of the Secretary will conduct such inspections of the structure and methods of fabrication as are deemed necessary by the Secretary prior to completion of the airplane and will witness structural tests in compliance with these regulations. (See CAR 04.304.)

04.052—TYPE INSPECTION AUTHORIZATION.—A type inspection will be authorized upon fulfillment of the following requirements:

(*a*) Completion of examination of the structural report and drawings and correction by the applicant of all errors and omissions which, in the opinion of the Secretary, must be corrected before authorization of the type inspection.

(*b*) Completion, and acceptance by the Bureau, of all structural tests required as part of the structural report or to prove compliance with the requirements herein specified.

(*c*) Submission of test reports conforming to the requirements of CAR 04.304 and approval of such reports by the Bureau.

04.053—TYPE INSPECTION PROCEDURE.—The type inspection shall consist of a ground inspection and a flight test of an airplane built to conform with the technical data previously submitted and on which the authorization of the type inspection was based. The following subparagraphs shall be complied with in connection with the type inspection.

04.0530—*Affidavit of Conformity.*—The manufacturer shall present to a designated inspector of the Bureau an affidavit of conformity (Form AC 04–1) in which his chief engineer or other responsible technical representative shall swear under oath that the airplane submitted for type inspection has been manufactured in accordance with the latest technical data submitted to and approved by the Secretary (including all revisions and additions required by the Secretary in connection with authorization of the type inspection) except for any deviations therefrom, which shall be listed and described.

04.0531—*Weight and Balance Report.*—The airplane shall be weighed and its balance determined in the presence of the inspector, and the manufacturer shall submit to such inspector a complete report covering the determination of the weights and center of gravity locations for which certification is desired.

04.0532—*Applicant's Flight Test Report.*—Prior to, or at the time of, presentation of the airplane for flight tests, the applicant shall submit to the inspector a detailed report of flight tests of the airplane involved. This report shall be signed by the applicant's test pilot who shall certify that the airplane has been flown by him in all maneuvers required for proof of compliance with the flight requirements hereinafter specified and found to conform therewith, except that for very large airplanes this procedure may be modified as deemed necessary by the Secretary.

04.0533—*Ground Inspection.*—Before conducting any flight tests, the inspector will complete the ground inspection to the extent that all items affecting the safety of flight have been found satisfactory.

04.0534—*Flight Tests.*—The airplane shall be subjected to such flight tests as are necessary to prove compliance with the flight and operation requirements specified in CAR 04.7 and to supply the information required on Form AC 04–2.

04.0535—*Discontinuance of Type Inspection.*—If during any part of the ground inspection or flight test there is noted any unfavorable characteristic or defect which is considered sufficiently serious by the inspector to warrant discontinuing the type inspection until corrective measures have been taken by the applicant,

(*a*) the inspector will note each unsatisfactory item on Form AC 04–3 with sufficient detail so that it will be clear to all concerned;

(*b*) one copy of Form AC 04–3 will be transmitted to the manufacturer;

(*c*) the manufacturer shall advise the Bureau when the aircraft, incorporating the required changes, will be available for continuance of the type inspection, and

(*d*) the manufacturer shall furnish the Secretary with technical data descriptive of all structural changes except those of an obviously minor nature, and such changes shall be approved prior to resuming the type inspection.

04.054—CERTIFICATION OF AIRPLANES.—The procedure specified in the following subparagraphs will be followed in certifying as to the airworthiness of an airplane.

04.0540—*Issuance of Aircraft Specification.*—Upon completion of all reports, tests and inspections required to prove compliance with the airworthiness requirements to the satisfaction of the Secretary and upon receipt of the certification of the inspector (or inspectors) who conducted the type inspection to the effect that the airplane inspected was found to be airworthy, together with properly executed inspection forms specified in the preceding paragraphs, an Aircraft Specification will be issued for the type and model of the airplane in question. The Aircraft Specification will certify as to the airworthiness of the type of airplane in question when manufactured and inspected in accordance with the provisions noted thereon.

04.0541—*Issuance of Type Certificates.*—A type certificate such as is described in CAR 01 will be issued to the applicant upon compliance with the requirements therein.

04.0542—*Authenticated Data.*—As a part of the type certificate, the Secretary will furnish the applicant, upon issuance of such certificate, one set of drawing lists on which the seal of the Bureau is impressed. These lists shall show acceptance of the drawings as partial proof of the airworthiness of the type of airplane to which they apply.

04.055—CONFIDENTIAL DATA.—All technical data submitted by the applicant for the Bureau's file will be held confidential and will be used only in connection with the airworthiness rating of the airplane or airplanes to which such data apply; provided, however, that the Secretary may at his discretion make such use of the confidential data as is required in the interests of public safety. Access to confidential data will be provided to accredited representatives of the holder of, or applicant for, a pertinent type certificate. Confidential data will not be used for reference purposes in connection with the repair, alteration or remodeling of certificated airplanes by persons other than the holder of the pertinent type certificate without the written consent of such holder unless he is out of business or has given the Bureau blanket permission for such use.

04.06—Changes, Repair and Alteration.

04.060—CHANGE, REPAIR OR ALTERATION OF CERTIFICATED AIRPLANES.—Change, repair or alteration of a certificated airplane renders such airplane subject to re-rating as to airworthiness in accordance with CAR 18, but does not affect the type certificate on which the airworthiness certification may have been based.

04.061—CHANGES AFFECTING TYPE CERTIFICATE.—The holder of a type certificate shall apply for approval of any specific change or revision of the approved drawings or specifications which, in the opinion of the Secretary, affect the airworthiness of the airplane and shall submit sufficient technical data in the form of strength calculations and strength tests, or both, to demonstrate continued compliance with the airworthiness requirements hereinafter specified.

If, in the opinion of the Secretary, the changes are such as to affect the performance or operating characteristics, appropriate tests may be required. Upon satisfactory proof that the revisions do not render the airplane type unairworthy the Aircraft Specification may be modified to include airplanes embodying the approved changes. and sealed copies of the revised drawing list pages will be returned to the applicant.

04.0610—*Drawing Changes.*—When a revised drawing is submitted to the Bureau and airplanes previously constructed according to the original drawing are not to be changed, such revised drawing shall indicate the serial number of the first airplane to which the change applies. Corrected pages of the drawing lists shall be submitted in duplicate for each model to which the revision applies. Alternate installations shall be so designated and properly indicated on the drawing lists.

04.0611—*Minor Changes.*—The suitability of a minor change will be judged on the basis of the airworthiness requirements which were in effect when the particular airplane model or type was originally certificated, unless the specific circumstances indicate the advisability of compliance with current requirements. Minor changes which obviously do not impair the structural strength or reliability of the airplane nor affect its flying characteristics may be approved by authorized Bureau inspectors without prior reference to the Washington Office. Shop drawings showing such changes shall be forwarded to the Bureau for record purposes.

04.0612—*Major Changes.*—Major changes, such as the installation of an engine of a type other than that covered by the original type certificate, shall require the issuance of a new type certificate and may require compliance with current requirements at the discretion of the Secretary.

04.0613—*Changes by Persons Other than Holder of Type Certificate.*—Changes such as described in CAR 04.061 when made by persons other than the holder of the type certificate are subject to the same procedure as that outlined in CAR 04.061 and pertinent sub-paragraphs, except that the written consent of the holder of the type certificate shall be obtained if it is desired to refer to technical data originally submitted to the Bureau in connection with application for type certificate. (See CAR 04.055.)

04.06130—If changes by persons other than the holder of the type certificate are to be made effective for all airplanes manufactured under the pertinent type certificate, the pertinent Aircraft Specification will be revised accordingly.

04.06131—If changes by persons other than the holder of the type certificate are to be incorporated only on airplanes owned or operated by the person or persons making the change, an amendment to the pertinent Aircraft Specification will be issued to cover the approved changes.

04.1—DEFINITIONS.

04.100—**Weight, *W.***—The total weight of the airplane and its contents.

04.101—**Design Weight.**—The weight of the airplane assumed for purposes of showing compliance with the structural requirements hereinafter specified.

04.1010—Minimum Design Weight.—Weight empty with standard equipment, plus crew, plus fuel of 0.25 lb. per maximum (except take-off) horsepower, plus oil.

04.102—**Standard Weight.**—The maximum weight for which the airplane is certificated as complying with all the airworthiness requirements for normal operations.

04.103—**Provisional Weight.**—The maximum weight for which the airplane is certificated as complying with the airworthiness requirements as modified for scheduled air carriers in CAR 04.71.

04.104—Design Wing Area, *S*.—The design wing area is the area bounded by the projection of the actual outline on the surface containing the wing chords, without deduction for the area blanketed by fuselage or nacelles. That part of the area which lies within the fuselage or nacelles is bounded by lateral lines connecting the intersections of the leading and trailing edges with the fuselage or nacelle, ignoring fairings or fillets.

04.105—Design Power, *P*.—The total engine horsepower used in determining the maneuvering load factors and design level speed, V_L. (See CAR 04.111 and 04.211.)

04.106—Design Wing Loading, *W/S*.—The design weight (CAR 04.101) divided by the design wing area (CAR 04.104).

04.107—Design Power Loading, *W/P*.—The design weight (CAR 04.101) divided by the design power. (See CAR 04.105 and Figure 04–3.)

04.108—Air Density, ρ.—The mass density of the air through which the airplane is moving, in terms of the weight of a unit volume of air divided by the acceleration of gravity. The symbol ρ_o denotes the mass density of air at sea level under standard atmospheric conditions and has the value of 0.002378 slugs per cubic foot. (See CAR 04.130 for definition of standard atmosphere.)

04.109—True Airspeed, V_t.—The velocity of the airplane, along its flight path, with respect to the body of air through which the airplane is moving.

04.110—Indicated Airspeed.—V, the true airspeed multiplied by the term $\sqrt{\rho/\rho_o}$. (See CAR 04.108.)

04.111—Design Level Speed, V_L.—The indicated airspeed in level flight at design gross weight when the design power (CAR 04.105) is delivered by the engine or engines. In estimating V_L for design purposes a suitable propeller efficiency shall be assumed. This value of V_L will be used as a basis for speed limitations. (See CAR 04.7430.)

04.112—Design Gliding Speed, V_g.—The maximum indicated airspeed used in determining the flight loads. (See CAR 04.211.)

04.113—Design Stalling Speed, V_s.—The computed indicated airspeed in unaccelerated flight based on the maximum lift coefficient of the wing and the design gross weight. The effects of slipstreams and nacelles shall be neglected in computing V_s. When high-lift devices are in operation the corresponding stalling speed will be denoted by V_{sf}.

04.114—Design Flap Speed, V_f.—The indicated airspeed at which maximum operation of high-lift devices is assumed. (See CAR 04.211.)

04.115—Maximum Vertical Speed, V_m.—A fictitious value of indicated airspeed computed for unaccelerated flight in a vertical dive with zero propeller thrust.

04.116—Design Maneuvering Speed, V_p.—The indicated airspeed at which maximum operation of the control surfaces is assumed. (See CAR 04.211.)

04.117—Design Gust Velocity, *U*.—A specific gust velocity assumed to act normal to the flight path. (See CAR 04.2121.)

04.118—Dynamic Pressure, *q*.—The kinetic energy of a unit volume of air.

$q = \frac{1}{2}\rho V_t^2$ (in terms of true airspeed).

$= \frac{1}{2}\rho_o V^2$ (in terms of indicated airspeed).

$= V^2/391$ pounds per square foot, when V is miles per hour indicated airspeed.

(See CAR 04.108 for definition of ρ.)

04.119—Load Factor or Acceleration Factor, *n*.—The ratio of a load to the design weight. When the load in question represents the net external load acting on the airplane in a given direction, *n* represents the acceleration factor in that direction.

04.120—Limit Load.—A load (or load factor, or pressure) which it is assumed or known may be safely experienced but will not be exceeded in operation.

04.121—Factor of Safety, *j*.—A factor by which the *limit* loads are multiplied for various design purposes.

04.122—Ultimate Factor of Safety, j_u.—A specified factor of safety used in determining the maximum load which the airplane structure is required to support.

04.123—Yield Factor of Safety, j_v.—A specified factor of safety used in connection with the prevention of permanent deformations.

04.124—Ultimate Load.—A *limit* load multiplied by the specified *ultimate* factor (or factors) of safety. See above definitions and CAR 04.200.

04.125—Yield Load.—A *limit* load multiplied by the specified *yield* factor (or factors) of safety. (See above definitions and CAR 04.201.)

04.126—Strength Test.—A static load test in which the *ultimate* loads are properly applied. (See CAR 04.200 and CAR 04.3021.)

04.127—Proof Test.—A static load test in which the *yield* loads are properly applied for a period of at least one minute. (See CAR 04.201.)

04.128—Balancing Loads.—Loads by which the airplane is placed in a state of equilibrium under the action of external forces resulting from specified loading conditions. The state of equilibrium thus obtained may be either real or fictitious. Balancing loads may represent air loads, inertia loads, or both. (See CAR 04.2210.)

04.129—Aerodynamic Coefficients, C_L, C_M, *C. P.*, etc.—The coefficients hereinafter specified are those of the "absolute" (nondimensional) system adopted as standard in the United States. The subscripts N and C used hereinafter refer respectively to directions normal to and parallel with the basic chord of the airfoil section. Other subscripts have the usual significance. When applied to an entire wing or surface, the coefficients represent average values and shall be properly correlated with local conditions (load distribution) as required in CAR 04.217.

04.130—Standard Atmosphere (Standard Air).—Standard atmosphere refers to that variation of air conditions with altitude which has been adopted as standard in the United States. (See any aeronautics text book or handbook, or NACA Technical Report No. 218.)

04.131—Primary Structure.—Those portions of the airplane which are essential to the distribution and transmission of the loads acting on the airplane in the specified loading conditions. Primary structure includes control systems, engine mounts, fittings, members transmitting local loads, auxiliary members used to support or strengthen other members carrying direct loads, coverings of wing and control surfaces, and all other structural components to which the above definition applies.

04.2—STRUCTURAL LOADING CONDITIONS.

04.20—General Structural Requirements.

04.200—Strength.—The primary structure (see CAR 04.131) shall be capable of supporting the *ultimate* loads (see CAR 04.124) determined by the loading conditions and *ultimate* factors of safety hereinafter specified, the loads being properly distributed and applied.

04.201—DEFORMATIONS.—The primary structure shall be capable of supporting without detrimental permanent deformations, for a period of at least one minute, the *yield* loads (see CAR 04.125) determined by the loading conditions and *yield* factors of safety hereinafter specified, the loads being properly distributed and applied. Where no *yield* factor of safety is specified a factor of 1.0 shall be assumed. In addition, temporary deformations which occur before the yield load is reached shall be of such a nature that their repeated occurrence will not weaken or damage the primary structure.

04.202—STIFFNESS.—The primary structure shall be capable of supporting the *limit* loads (see CAR 04.120) determined by the loading conditions hereinafter specified without deflecting beyond whatever limits may be hereinafter prescribed or which may be deemed necessary by the Secretary for the case in question.

04.203—PROOF OF STRENGTH AND RIGIDITY.—No general requirements, but see CAR 04.3 for specific requirements.

04.204—MATERIALS, FABRICATION, PROTECTION, ETC.—No general requirements, but see CAR 04.4 for specific requirements.

04.21—Flight Loads.

04.210—GENERAL.—The airworthiness rating of an airplane with respect to its strength under flight loads will be based on the airspeeds and accelerations (from maneuvering or gusts) which can safely be developed in combination. For certain classes of airplanes the acceleration factors and gust velocities are arbitrarily specified hereinafter and shall be used for those classes. The airspeeds which can safely be developed in combination with the specified acceleration factors and gusts shall be determined in accordance with the procedure hereinafter specified and shall serve as a basis for restricting the operation of the airplane in flight. (See CAR 04.743.)

04.211—AIRSPEEDS.—(See CAR 04.109 to 04.116 for definitions). The design airspeeds shall be determined as follows:

V_L shall correspond to design power in accordance with CAR 04.11.

V_g shall not be less than $V_L+K_g\,(V_m-V_L)$, except that it need not be greater than either V_L+100 miles per hour or 1.5 V_L, whichever is lower. K_g is specified on Fig. 04–1. V_m is defined in CAR 04.115.

V_f shall not be less than $2V_{sf}$. V_{sf} is defined in CAR 04.113.

V_p shall not be less than $V_{sf}+K_p(V_L-V_{sf})$, except that it need not be greater than V_L. K_p is specified on Fig. 04–2.

(See CAR 04.2220, 04.2223 and 04.2230 for exceptions for multi-engine airplanes).

04.212—LOAD FACTORS.—The flight load factors specified hereinafter shall represent *wing* load factors. The *net* load factor, or acceleration factor, shall be obtained by proper consideration of balancing loads acting on the airplane in the specific flight conditions.

04.2120—*Maneuvering Load Factors.*—The *limit* maneuvering load factors specified hereinafter (see Fig. 04–3) are derived largely from experience with conventional types of airplanes and shall be considered as minimum values unless it can be proved, to the satisfaction of the Secretary, that the airplane embodies features of design which make it impossible to develop such values in flight, in which case lower values may be used subject to the approval of the Secretary.

04.2121—*Gust Load Factors.*—The gust load factors shall be computed on the basis of a gust of the magnitude specified, acting normal to the flight path, and proper allowance shall be made for the effects of aspect ratio on the slope of the lift curve. The gust velocities specified shall be used only in conjunction with the gust formulae hereinafter specified. The basic gust load factor (n) need not exceed that corresponding to the maximum dynamic C_L obtainable under sudden changes of angle of attack. The following formula for the load factor added in encountering a gust shall be used for wings (see CAR 04.22 for tail surfaces).

$\Delta n = \frac{KUVm}{575(W/S)}$, where Δn = *limit* load factor increment.

K = gust reduction factor.

$= \frac{1}{2}(W/S)^{\frac{1}{4}}$, but need not exceed 1.0.

U = gust velocity, feet per second.

(Note that the "effective" sharp-edged gust equals KU)

V = indicated airspeed, miles per hour.

W/S = wing loading (CAR 04.106).

m = slope of lift curve, C_L per radian, corrected for aspect ratio.

04.2122—*Factors of Safety.*—The minimum factors of safety are specified for each loading condition. See also CAR 04.27 for multiplying factors of safety required in certain cases.

04.213—Symmetrical Flight Conditions (Flaps Retracted).

04.2130—*General.*—The following flight conditions, together with Table 04–1, shall be considered as representing the minimum number of conditions required to cover a suitable range of symmetrical flight loadings.

04.2131—*Condition I (Positive High Angle of Attack).*—The factors given in Table 04–1 and Fig. 04–3 for this condition shall be used. To provide for flight conditions critical for the front lift truss or its equivalent the aerodynamic characteristics C_N, *C.P.* (or C_M), and C_c shall be determined as follows:

(*a*) $C_{N_I} = \frac{n_I(W/S)}{q_L}$ (q_L is dynamic pressure corresponding to V_L; see CAR 04.111 and 04.118.)

(*b*) C_c' = value corresponding to C_{N_I}, or value equal to $-.20\ C_{N_I}$, whichever is greater negatively.

(*c*) *C.P.'* = most forward position of the center of pressure between $C_L = C_{N_I}$ and C_L max.; when C_{N_I} exceeds C_L max., the *C.P.* curve shall be extended accordingly.

(*d*) For biplane combinations the *C.P.* of the upper wing shall be assumed to be 2.5 per cent of the chord forward of its nominal position.

(*e*) C_M' = moment coefficient necessary to give the required *C.P.'* in conjunction with C_{N_I}.

04.21310—Condition I_1 (Positive High Angle of Attack Modified).—The smaller of the two values of C_c specified in CAR 04.2131 (*b*), and the most rearward *C.P.* position in the range specified in CAR 04.2131 (*c*) shall also be investigated when Condition *I* is critical for the rear spar (or its equivalent) or if any portion of the front spar (or its equivalent) is likely to be critical in tension. Only the wings and wing bracing need be investigated for this condition.

04.2132—*Condition II (Negative High Angle of Attack).*—The factors given in Table 04–1 for this condition shall be used, with the following provisions:

(*a*) $C_{N_{II}} = \frac{n_{II}(W/S)}{q_L}$

(*b*) C_c = actual value corresponding to $C_{N_{II}}$.

(*c*) When C_c is positive or has a negative value smaller than 0.02 it may be assumed to be zero.

(*d*) C_M = actual value corresponding to $C_{N_{II}}$.

04.2133—*Condition III (Positive Low Angle of Attack).*—The factors given in Table 04–1 for this condition shall be used, with the following provisions:

(*a*) $C_{N_{III}}=\frac{n_{III}(W/S)}{q_o}$ (q_o is dynamic pressure corresponding to V; see CAR 04.118 and 04.112).

(*b*) C_c=actual value corresponding to $C_{N_{III}}$.

(*c*) When C_c is positive or has a negative value smaller than 0.02 it may be assumed to be zero.

(*d*) $C_M'=C_M-0.01$, where C_M is the actual value corresponding to $C_{N_{III}}$.

04.21330—Condition III_1 (Positive Low Angle of Attack, Modified).—If the moment coefficient of the airfoil section at zero lift has a positive value, or a negative value smaller than 0.05, the effects of displaced ailerons on the moment coefficient shall be accounted for in Condition *III* for that portion of the span incorporating ailerons. To cover this point it will be satisfactory to assume that the basic value of C_M is equal to -0.05 for that portion of the span incorporating ailerons, unless it is actually greater negatively. Only the wings and wing bracing need be investigated for this condition.

04.2134—*Condition IV (Negative Low Angle of Attack).*—The factors given in Table 04–1 for this condition shall be used, with the following provisions:

(*a*) $C_{N_{IV}}=\frac{n_{IV}(W/S)}{q_o}$

(*b*) C_c=actual value corresponding to $C_{N_{IV}}$.

(*c*) When C_c is positive or has a negative value smaller than 0.02 it may be assumed to be zero.

(*d*) $C_M'=C_M-0.01$, where C_M is the actual value corresponding to $C_{N_{IV}}$.

04.2135—*Condition V (Inverted Flight).*—The factors given in Table 04–1 for this condition shall be used, with the following provisions:

(*a*) $C_{N_V}=\frac{n_V(W/S)}{q_L}$

(*b*) $C'_c=0$.

(*c*) $C.P.'=25\%$.

(*d*) Only the rear (or single) lift truss system of externally braced wing structures need be investigated for this condition.

04.2136—*Condition VI (Gliding).*—The factors given in Table 04–1 shall be used for this condition, with the following provisions:

(*a*) $C_{N_{VI}}$=value corresponding to C_c max. (positive)

(*b*) $C'_c=C_c$ max. (positive)$+0.01$

(*c*) $C_M'=C_M-0.01$, where C_M is the actual value corresponding to $C_{N_{VI}}$.

(*d*) The drag of nacelles and other items attached to the wings shall be conservatively estimated and properly included in the investigation of this condition.

(*e*) Only the wings and wing bracing need be investigated for this condition.

04.214—Symmetrical Flight Conditions (Flaps or Auxiliary Devices in Operation).

04.2140—*General.*—When flaps or similar high-lift devices are installed on the wings, the design conditions shall be suitably modified to account for their use in flight. The modifications shall be based on the intended use of the flaps and the aerodynamic characteristics of the wing. The following conditions, together with Table 04–2, shall be considered as representing the minimum number of conditions required to cover a suitable range of symmetrical flight loadings in cases where the flaps are used only at relatively low airspeeds.

04.2141—*Condition VII (Positive Gust, Flaps Deflected).*—The factors given in Table 04–2 for this condition shall be used, with the following provisions:

(*a*) The most critical deflection of the flap shall be investigated.

(*b*) The magnitude and distribution of normal, chord and moment forces over the wing shall correspond to that which would be obtained in developing the specified *limit* gust load factor at the specified airspeed. The gust formula in CAR 04.2121 shall be used.

04.2142—*Condition VIII (Negative Gust, Flaps Deflected).*—The factors given in Table 04–2 for this condition shall be used, with the following provisions:

(*a*) The most critical deflection of the flap shall be investigated.

(*b*) The magnitude and distribution of normal, chord and moment forces over the wing shall correspond to that which would be obtained in encountering the specified *limit* gust load factor at the specified airspeed. The gust formula in CAR 04.2121 shall be used.

04.2143—*Condition IX (Dive, Flaps Deflected).*—The factors given in Table 04–2 for this condition shall be used, with the following provisions:

(*a*) The most critical deflection of the flap shall be investigated.

(*b*) The load factor and the magnitude and distribution of normal, chord and moment forces over the wing shall correspond to the angle of attack at which the greatest rearward chord loads are produced on the wing structure.

(*c*) Only the wings and wing bracing need be investigated for this condition.

04.215—Unsymmetrical Flight Conditions.

04.2150—*General.*—Pending the development of more rational methods, the following unsymmetrical flying conditions shall apply. In these conditions the angular inertia of the wings shall be assumed equal to zero, except that the effect of wing nacelles and landing gear may be considered.

04.2151—*Condition I_u.*—Condition *I* (CAR 04.2131) shall be modified by assuming 100 per cent of the air load to be acting on one side of the airplane and 70 per cent on the other. For airplanes over 10,000 pounds gross weight the latter factor may be increased linearly with gross weight up to 80 per cent at 25,000 pounds.

04.2152—*Condition III_u.*—Condition *III* (CAR 04.2133) shall be modified as described for Condition I_u in CAR 04.2151, except that when Condition III_1 (CAR 04.21330) applies, the loading for the latter condition shall be substituted on the 100 per cent side.

04.2153—*Condition V_u.*—Condition *V* (CAR 04.2135) shall be modified as described for Condition I_u in CAR 04.2151.

04.216—Special Flight Conditions.

04.2160—*Gust at Reduced Weight.*—The requirements for gust conditions (excepting tail surface gust conditions) under any loading between minimum and maximum design weight shall be met by primary structure critically loaded thereby.

04.2161—*Lift-Wire-Cut.*—For wings employing wire bracing in the lift truss, Conditions *I* and *III* shall be investigated, using load factors n_I and n_{III} of one half the values specified for these conditions and assuming that any lift wire is out of action. This requirement does not apply to parallel double lift wires, for which case see CAR 04.273.

04.2162—*Drag-Wire-Cut.*—Drag struts in double-truss systems shall be designed to withstand the loads developed when the drag wire of the upper system in one bay and the drag wire of the lower system in the adjacent bay are each carrying their *limit* loads from any flight condition, the remaining wires in these two bays being assumed to be out of action. The minimum *ultimate* factor of safety shall be 1.5.

04.2163—*Unsymmetrical Propeller Thrust.*—The structure shall incorporate an *ultimate* factor of safety of 1.5 against failure due to loads caused by maximum (except take-off) power applied on one side of the plane of symmetry only, when power on the other side is off and the airplane is in unaccelerated rectilinear flight.

04.2164—*Wing Tanks Empty.*—If fuel tanks are supported by the wing structure, such structure and its bracing shall also be investigated for Conditions *I, II, III,* and *IV* with wing tanks empty. The design weight may be reduced by 0.9 pounds per certified maximum (except take-off) horsepower.

04.217—Wing Load Distribution.—The *limit* air loads and inertia loads acting on the wing structure shall be distributed and applied in a manner closely approximating the actual distribution in flight.

04.22—Control Surface Loads.

04.220—General.—In addition to the flight loads specified in CAR 04.21 the primary structure shall meet the requirements hereinafter specified to account for the loads acting on the control surfaces. The following loading conditions include the application of balancing loads (CAR 04.128) derived from the symmetrical flight conditions and also cover the possibility of loading the control surfaces and systems in operating the airplane and by encountering gusts. See also CAR 04.27 for multiplying factors of safety required in certain cases.

04.221—Horizontal Tail Surfaces.

04.2210—*Balancing.*—The *limit* load acting on the horizontal tail surfaces shall not be less than the maximum balancing load obtained from Conditions *I, II, III, IV, VII* and *VIII.* The factors given in Table 04–3 shall be used, with the following provisions:

(*a*) *P* (in Fig. 04–4)=40% of net balancing load. (This requires the load on the fixed surface to be 140% of the net balancing load.) In any case *P* need not exceed that corresponding to a *limit* elevator control force of 150 pounds, applied by the pilot.

04.2211—*Maneuvering (Horizontal Surfaces).*—The factors specified in Table 04–3 and Fig. 04–5 for this condition shall be used, together with the following provisions:

(*a*) The *limit* unit loading in either direction need not exceed that corresponding to a load on the elevator control equal to the maximum *limit* control force (Table 04–6) and shall not be less than that corresponding to the minimum *limit* control force (Table 04–6) except as modified by paragraph (*b*) following.

(*b*) In any case the average *limit* unit loading shall not be less than the minimum pressure specified in Table 04–3 for this condition.

04.2212—*Damping (Horizontal Surfaces).*—The total *limit* load acting down on the fixed surface (stabilizer) in the maneuvering condition (CAR 04.2211) shall be applied in accordance with the load distribution of Fig. 04–6, acting in either direction. The load acting on the movable surface in the maneuvering condition may be neglected in determining the damping loads.

04.2213—*Tab Effects (Horizontal Surfaces).*—When a tab is installed on the horizontal movable tail surface so that it can be used by the pilot as a trimming device, the *limit* unit loading over the entire horizontal surfaces shall not be less than that corresponding to the application of the minimum *limit* control force (Table 04–6) together with maximum deflection of the tab in a direction assisting the control force. The factors specified in Table 04–3 for this condition shall be used.

04.222—Vertical Tail Surfaces.

04.2220—*Maneuvering.*—The factors given in Table 04–4 and Fig. 04–5 for this condition shall be used, with the following provisions:

(*a*) If the propeller axes are not in the plane of symmetry, the design speed shall not be less than the maximum speed in level flight with any engine inoperative.

(*b*) The *limit* unit loading in either direction need not exceed that corresponding to the maximum *limit* control force (Table 04–6) except as modified by paragraph (*c*) following.

(*c*) In any case the average *limit* unit loading shall not be less than the minimum pressure specified in Table 04–4 for this condition.

04.2221—*Damping (Vertical Surfaces).*—The total *limit* load acting on the fixed surface (fin) in the maneuvering condition shall be applied in accordance with the load distribution of Fig. 04–6, acting in either direction. The load acting on the movable surface in the maneuvering condition may be neglected in determining the damping loads.

04.2222—*Gusts (Vertical Surfaces).*—The gust conditions specified in Table 04–4 shall be applied, using the following formulae and provisions:

(*a*) The gust shall be assumed to be sharp-edged and to act normal to the plane of symmetry in either direction.

(*b*) The average *limit* unit pressure, $\overline{w}$, developed in striking the gust shall be determined from the following formula:

$\overline{w}=UVm/575$, where

$\overline{w}$ is in pounds per square foot,

U is in feet per second,

V is in miles per hour and

m=slope of lift curve, C_L per radian, corrected for aspect ratio. The aspect ratio shall not be taken as less than 2.0 in any case.

(*c*) This condition applies only to that portion of the vertical surface which has a well-defined leading edge.

(*d*) The chord distribution extending over the fixed and movable surfaces shall simulate that for a symmetrical airfoil, except that the distribution in Fig. 04–6 may be used where applicable.

04.2223—*Tab Effects (Vertical Surfaces).*—When a tab is installed on the vertical movable tail surface so that it can be used by the pilot as a trimming device the *limit* unit loading over the entire vertical tail surfaces shall not be less than that corresponding to the maximum deflection of the tab together with simultaneous application of the following control force in a direction assisting the tab action:

For airplanes with all propeller axes in the plane of symmetry, zero.
For airplanes with propeller axes not in the plane of symmetry, 200 pounds.

The factors specified in Table 04–4 for this condition shall be used, with the following exception:

(*a*) If the propeller axes are not in the plane of symmetry, the design speed V_L specified in Table 04–4 may be reduced to the maximum speed in level flight with any engine inoperative.

04.2224—*Special Cases (Vertical Surfaces.)*—A special ruling shall be obtained from the Secretary when an automatic pilot is used on airplanes with propeller axes not in the plane of symmetry.

04.223—Ailerons.

04.2230—*Maneuvering.*—The factors given in Table 04–5 and Fig. 04–7 for this condition shall be used, with the following provisions:

(*a*) If the propeller axes are not in the plane of symmetry, the design speed shall not be less than the maximum speed in level flight with any engine inoperative.

(*b*) The *limit* unit loading in either direction need not exceed that corresponding to the maximum control force (Table 04–6) resisted by only one aileron, except as modified by paragraph (*c*) following.

(*c*) In any case the average *limit* unit loading shall not be less than the minimum pressure specified in Table 04–5 for this condition.

04.2231—*Tab Effects* (*Ailerons*).—(Applies only to airplanes with propeller axes not in the plane of symmetry.) When a tab is installed on one or both ailerons so that it can be used by the pilot to assist in moving the ailerons, the *limit* unit loading over both ailerons shall be of sufficient magnitude and in such direction as to hold the ailerons in equilibrium with the tab or tabs deflected to the maximum position. The factors specified in Table 04–5 for this condition shall be used.

04.2232—*Flying Conditions* (*Ailerons*).—The ailerons and their control system shall be capable of meeting all requirements specified in the basic symmetrical flying conditions so far as the latter produce symmetrical loads on the ailerons.

04.224—Wing Flaps.—Wing flaps shall be loaded in accordance with Conditions *VII* and *VIII* (CAR 04.2141 and 04.2142) and in addition shall be capable of developing an *ultimate* factor of safety of at least 1.5 with respect to any intermediate conditions which are more severe for any part of the flap or its operating mechanism.

04.225—Tabs.—The *limit* forces acting on control-surface tabs shall be determined from the most severe combination of airplane speed and tab normal force coefficient likely to be obtained for any usable loading condition of the airplane and at speeds up to the design gliding speeds, V_g. An *ultimate* factor of safety of at least 1.5 shall be maintained.

04.226—Special Devices.—Special rulings shall be obtained from the Secretary in connection with the design and analysis of wing-slot structures, spoilers, unconventional ailerons, auxiliary airfoils and similar devices. Requests for special rulings shall be accompanied by suitable drawings or sketches of the structure in question, together with general information and an outline of the method by which it is proposed to determine the structural loading.

04.23—Control System Loads.

04.230—General.—All control systems shall be designed for *limit* loads 25 per cent greater than those corresponding to the *limit* loads specified for the control surfaces to which they are attached, assuming the movable surface to be in that position which produces the greatest load in the control system, except that the maximum and minimum control force limits in Table 04–6 shall apply as hereinafter specified. The factors of safety specified in Table 04–6 shall be used. See also CAR 04.27 for multiplying factors of safety required in certain cases. See also CAR 04.331 for operation requirements for control systems.

04.2300—The forces in the control wires or push rods operating the movable surfaces shall be computed and their effect on the rest of the structure shall be investigated and allowed for in the design of such structure.

04.231—Elevator Systems.—In applying CAR 04.230 the control force specified in Table 04–6 and Fig. 04–8 shall be assumed to act in a fore-and-aft direction and shall be applied at the grip of a control stick, or shall be equally divided between two diametrically opposite points on the rim of a control wheel.

04.232—Rudder Systems.—In applying CAR 04.230 the control force specified in Table 04–6 shall be assumed to act in a direction which will produce the greatest load in the control system and shall be applied at the point of contact of the pilot's foot.

04.233—Aileron Systems.—In applying CAR 04.230 it shall be assumed that the ailerons are loaded in opposite directions. The control force specified in Table 04–6 and Fig. 04–9 shall be assumed to act in a lateral direction at the grip of a control stick, or shall be assumed to act as part of couple equal to the specified force multiplied by the diameter of a control wheel. The following assumptions shall be made:

(*a*) For nondifferential ailerons, 75 per cent of the stick force or couple shall be assumed to be resisted by a down aileron, the remainder by the other aileron; also, as a separate condition, 50 per cent shall be assumed to be resisted by an up aileron, the remainder by the other aileron.

(*b*) For differential ailerons, 75 per cent of the stick force or couple shall be assumed to be resisted by each aileron in either the up or down position, or rational assumptions based on the geometry of the system shall be made.

04.234—Flap and Tab Control Systems.—In applying CAR 04.230 suitable minimum manual forces shall be assumed to act on flap and tab control systems and other similar controls.

04.24—Ground Loads.

04.240—General.—The following conditions represent the minimum amount of investigation required for conventional (tail down type) landing gear. For unconventional types it may be necessary to investigate other landing attitudes, depending on the arrangement and design of the landing gear members. Consideration will be given to a reduction of the specified *limit* load factors when it can be proved that the shock absorbing system will positively limit the acceleration factor to a definite lower value in the drop test specified in CAR 04.2411. The minimum factors of safety are specified for each loading condition. See also CAR 04.27 for multiplying factors of safety required in certain cases.

04.241—Level Landing.—The minimum *limit* load factor is specified in Fig. 04–10. The resultant of the ground reaction shall be assumed to be a force lying at the intersection of the plane of symmetry and a plane in which are located the axles and the center of gravity of the airplane less chassis. The propeller axis (or equivalent reference line) shall be assumed horizontal and the basic value of the vertical component of the resultant of the ground reaction shall be equal to the gross weight of the airplane minus chassis and wheels. The horizontal component shall be of the magnitude required to give the resultant force the specified direction except that it need not be greater than 25 per cent of the vertical component. The resultant of the ground reaction shall be assumed to be divided equally between wheels and to be applied at the axle at the center of the wheel. The shock-absorber unit and tires shall be assumed to be deflected to half their total travel, unless it is apparent that a more critical arrangement could exist. The minimum *ultimate* factor of safety shall be 1.5.

04.2410—If a sliding element instead of a rolling element is used for the landing gear, a horizontal component of one-half of the vertical component shall be used to represent the effect of ground friction, except that ski gear which is designed and used only for landing on snow and ice may be designed for the same horizontal component as wheel gear.

04.2411—*Energy Absorption.*—The level landing condition specified in CAR 04.241 shall be assumed to be produced by a free drop, in inches, equal to 0.36 times the calculated stalling speed (V_s) in miles per hour, except that the height of free drop shall not be less than 18 inches for airplanes employing devices which increase the normal sinking speed, but need not exceed 18 inches when such devices are not employed. The height of free drop is measured from the bottom of the tire to the ground, with the landing gear extended to its extreme unloaded position. (See CAR 04.340 and 04.440.)

04.242—Three-Point Landing.—The minimum *limit* load factor is specified in Fig. 04–10. The value of the sum of the static ground reactions shall be the gross weight of the airplane less chassis. The total load shall be divided between the chassis and tail skid or wheel in inverse proportion to the distances, measured parallel to the ground line, from the center of gravity of of the airplane less chassis to the points of contact with the ground. The load on the chassis shall be divided equally between wheels. Loads shall be assumed to be perpendicular to the

ground line in the three-point landing attitude, with all shock absorbers and tires deflected to the same degree as in level landing. The tail wheel or skid installation shall also be investigated for this condition. The minimum *ultimate* factor of safety shall be 1.5.

04.2420—*Energy Absorption.*—The three-point landing condition specified in CAR 04.242 shall be assumed to be produced by a free drop as specified under CAR 04.2411. This requires shock absorption by both main wheels and tail wheel (or skid). (See CAR 04.340 and 04.440.)

04.243—SIDE LOAD.—The minimum *limit* load factor shall be 0.667. The weight of the airplane shall be assumed to act on one wheel in a direction perpendicular to the ground. In addition, a side component of equal magnitude shall be assumed to act inward and normal to the plane of symmetry at the point of contact of the wheel, and an aft component equal to 0.55 times the vertical component shall be assumed to act parallel to the ground at such point. The airplane shall be assumed to be in a three-point attitude with the shock absorbers deflected to their static position and the tire deflected to one-quarter the nominal diameter of its cross section. The minimum *ultimate* factor of safety shall be 1.5.

04.244—ONE-WHEEL LANDING.—An investigation of the fuselage structure is required for a one-wheel landing, in which only those loads obtained on one side of the fuselage in the level landing condition are applied. The resulting load factor is therefore one-half of the level landing load factor. (This condition is identical with the level landing condition insofar as the landing gear structure is concerned.) The minimum *ultimate* factor of safety shall be 1.5.

04.245—BRAKED LANDING.—The minimum *limit* load factor shall be 1.33. Airplanes equipped with brakes shall be investigated for the loads incurred when a landing is made with the wheels locked and the airplane is in an attitude such that the tail skid or wheel just clears the ground. The weight of the airplane less chassis shall be assumed to act on the wheels in a direction perpendicular to the ground line in this attitude. In addition, a component parallel to the ground line shall be assumed to act at the point of contact of the wheels and the ground, the magnitude of this component being equal to the weight of the airplane less chassis times a coefficient of friction of 0.55. The tire in all cases shall be assumed to have deflected not more than one-quarter the nominal diameter of its cross section, and the deflection of the shock absorbers shall be the same as in level landing. The minimum *ultimate* factor of safety shall be 1.5.

04.246—SIDE LOADS ON TAIL WHEEL OR SKID.—Suitable assumptions shall be made to cover side loads acting on tail skids or tail wheels which are not free to swivel or which can be locked or steered by the pilot.

04.247—COMPLETE TURN-OVER.—The *ultimate* load factor for this condition shall be 4.5. The airplane shall be assumed to be inverted and the cabane structure (or its equivalent) shall be assumed to carry the entire load acting normal to the thrust line (or equivalent reference line). In cases where a wing is above the fuselage and braced by more than one cabane lift truss, at least one truss shall be designed for the entire load. The superstructure shall also be capable of resisting a total *ultimate* load of at least three-fourths the weight of the airplane, acting either forwardly or rearwardly parallel to the thrust line or wing chord and suitably divided between the uppermost points of the side trusses of the cabane or equivalent structure. Partial failure of the structure under these conditions is permissible provided that the specified *ultimate* loads can be resisted without endangering the occupants, assuming safety belts to be fastened. (See also CAR 04.460.)

04.25—Water Loads.

04.250—GENERAL.—The following requirements shall apply to the entire airplane, but have particular reference to hull structures, wings, nacelles, and float supporting structure. The requirements for certification of floats as individual items of equipment are specified in CAR 15. The minimum factors of safety are specified for each loading condition. See also CAR 04.27 for multiplying factors of safety required in certain cases. Detail design requirements for hulls and floats are specified in CAR 04.45.

04.251—Landing with Inclined Reactions (Float Seaplanes).—The vertical component of the *limit* load factor shall be 4.20 except that it need not exceed a value given by the following formula:

$$n=3.0+0.133\ (W/S).$$

The propeller axis (or equivalent reference line) shall be assumed to be horizontal and the resultant water reaction to be acting in the plane of symmetry and passing through the center of gravity of the airplane less floats and float bracing but inclined so that its horizontal component is equal to one-quarter of its vertical component. The forces representing the weights of and in the airplane shall be assumed to act in a direction parallel to the water reaction. The weight of the floats and float bracing may be deducted from the gross weight of the airplane.

04.2510—For the design of float attachment members, including the members necessary to complete a rigid brace truss through the fuselage, the minimum *ultimate* factor of safety shall be 1.85. For the remaining structural members the minimum *ultimate* factor of safety shall be 1.50.

04.252—Landing with Vertical Reactions (Float Seaplanes).—The *limit* load factor shall be 4.33, acting vertically, except that it need not exceed a value given by the following formula:

$$n=3.0+0.133\ (W/S).$$

The propeller axis (or equivalent reference line) shall be assumed to be horizontal, and the resultant water reaction to be vertical and passing through the center of gravity of the airplane less floats and float bracing. The weight of the floats and float bracing may be deducted from the gross weight of the airplane.

04.253—Landing with Side Load (Float Seaplanes).—The vertical component of the *limit* load factor shall be 4.0, to be applied to the gross weight of the airplane less floats and float bracing. The propeller axis (or equivalent reference line) shall be assumed to be horizontal and the resultant water reaction shall be assumed to be in the vertical plane which passes through the center of gravity of the airplane less floats and float bracing and is perpendicular to the propeller axis. The vertical load shall be applied through the keel or keels of the float or floats, and evenly divided between the floats when twin floats are used. A side load equal to one-fourth of the vertical load shall be applied along a line approximately half-way between the bottom of the keel and the level of the water line at rest. When built-in struts are used, check calculations shall be made for the built-in struts with the side load at the level of the water line at rest. When twin floats are used, the entire side load specified shall be applied to the float on the side from which the water reaction originates. The minimum *ultimate* factor of safety shall be 1.50.

04.254—Step Landing (Boat Seaplanes).—The aircraft shall be in such an attitude that the propeller axis (or equivalent reference line) is horizontal and shall be assumed to be supported by a vertical buoyant force distributed over an area extending from the step forward to a point half-way between the step and the forward end of the normal load water line. Such area may be assumed to be a rectangle whose width is equal to the full projected width of the bottom at the step. The load on such area shall be so distributed that its intensity is 50 per cent greater at the keel than at the chine and 50 per cent greater on the section at the step than on the forward section. The volume of the prismoidal loading curve so obtained, from which the intensities may be computed, shall equal the gross weight of the airplane times a *limit* load factor of 5.33. The minimum *ultimate* factor of safety shall be 1.5.

(*a*) For this condition and load factor:

$nW=\frac{25abL}{16}$, where

n=*limit* load factor=5.33,
a=intensity of loading at the chine at the forward section,
b=the beam and
L=half the length of the load water line forward of the step.

The centroid of this loading may be assumed to be on the keel 8L/15 from the forward edge of the load, and the resultant water reaction shall pass through this centroid and the center of gravity of the airplane.

(*b*) The forces representing the weights of and in the airplane shall act in a direction parallel to the water reaction.

04.255—Two-Wave Landing (Boat Seaplane).—The aircraft shall be assumed to be supported by vertically applied up loads at each end of the load water line, the magnitude of each load being such that the resultant load passes through the main step and equals the gross weight of the airplane. The *limit* shear loads and bending moments shall be computed by assuming the gross weight of the airplane to be concentrated at the step and omitting all panelpoint loads. The structure at the point of application of the external loads need not be investigated for local stresses in this condition. The minimum *ultimate* factor of safety shall be 1.50.

04.256—Bottom Loading (Boat Seaplane).—The bottom plating, stringers, frames and adjoining structure shall be investigated for the *limit* unit loading determined by the following conditions, using a minimum *ultimate* factor of safety of 1.5:

(*a*) The *limit* unit loading for that portion of the hull bottom just forward of the main step shall be that determined from CAR 04.254.

(*b*) The area from the forward end of the normal load water line to a point half-way between the step and the forward end of the normal load water line shall be designed to support a *limit* load having the unit pressure found at the forward portion of the chine in CAR 04.254.

(*c*) The area extending from the step to the rear end of the normal load water line shall be designed to support a *limit* load having a unit pressure equal to 50 per cent of the average *limit* unit pressure found in CAR 04.254.

04.257—Seaplane Float Loads.—Each main float of a float seaplane shall carry the following loads when supported at the attachment fittings as installed on the airplane. The minimum *ultimate* factor of safety shall be 1.5.

(*a*) A *limit* load, acting upward, applied at the bow end of the float and of magnitude equal to one-half of that portion of the airplane gross weight normally supported by the particular float.

(*b*) The *limit* load specified in paragraph (*a*), above, acting upward at the stern.

(*c*) A *limit* load, acting upward, applied at the step and of magnitude equal to 1.33 times that portion of the airplane gross weight normally supported by the particular float.

04.2570—*Seaplane Float Bottom Loads.*—Main seaplane float bottoms shall be designed to withstand the following loads. The minimum *ultimate* factor of safety shall be 1.5.

(*a*) A *limit* load of at least 5.33 pounds per square inch over that portion of the bottom lying between the first step and a section at 25 per cent of the distance from the step to the bow.

(*b*) A *limit* load of at least 2.67 pounds per square inch over that portion of the bottom lying between the section at 25 per cent of the distance from the step to the bow and a section at 75 per cent of the distance from the step to the bow.

(*c*) A *limit* load of at least 2.67 pounds per square inch over that portion of the bottom lying between the first and second steps. If only one step is used, this load shall extend over that portion of the bottom lying between the step and a section at 50 per cent of the distance from the step to the stern.

04.258—Wing-Tip Float Loads.—Wing-tip floats and their attachment, including the wing structure, shall be analyzed for each of the following conditions, using a minimum *ultimate* factor of safety of 1.5:

(*a*) A *limit* load acting vertically up at the completely submerged center of buoyancy and equal to three times the completely submerged displacement.

(*b*) A *limit* load inclined upward at 45° to the rear and acting through the completely submerged center of buoyancy and equal to three times the completely submerged displacement.

(*c*) A *limit* load acting parallel to the water surface (laterally) applied at the center of area of the side view and equal to one and one-half times the completely submerged displacement.

04.2580—The primary wing structure shall incorporate sufficient extra strength to insure that failure of wing-tip float attachment members occurs before the wing structure is damaged.

04.259—Miscellaneous Water Loads.

04.2590—*Seawing Loads.*—Special rulings shall be obtained from the Secretary for the strength requirements for seawings.

04.26—Special Loading Conditions.

04.260—Engine Torque.—In the case of engines having five or more cylinders the stresses due to the torque load shall be multiplied by a *limit* load factor of 1.5. For 4, 3 and 2 cylinder engines the *limit* load factors shall be 2, 3 and 4 respectively. The torque acting on the airplane structure shall be computed for the take-off power, and the propeller speed corresponding thereto, for which the aircraft is certificated. (See CAR 04.744.) The engine mount and forward portion of the fuselage and nacelles shall be designed for this condition. The minimum *ultimate* factor of safety shall be 1.5, except that higher factors may be prescribed by the Secretary when it appears necessary to make special provision for conditions such as vibration, stress concentration and fatigue.

04.261—High Angle of Attack and Torque.—The *limit* loads determined from CAR 04.260 shall be considered as acting simultaneously with 75 per cent of the *limit* loads determined from Condition *I* (CAR 04.2131). The engine mount, nacelles and forward portion of the fuselage (when a nose engine is installed) shall be designed for this condition. The minimum *ultimate* factor of safety shall be 1.5.

04.262—Side Load on Engine Mount.—The *limit* load factor for this condition shall be equal to one-third of the *limit* load factor for Flight Condition *I* (CAR 04.2131) but shall in no case be less than 1.33. The engine mount and forward section of the fuselage and nacelles shall be analyzed for this condition, considering the *limit* load to be produced by inertia forces. The minimum *ultimate* factor of safety shall be 1.5.

04.263—Up Load on Engine Mount.—For engine mounts the *limit* load in each member shall be arbitrarily assumed as 50 per cent of that in the level landing condition but of opposite sign. The minimum *ultimate* factor of safety shall be 1.5.

04.264—Passenger Loads.—Passenger loads in the accelerated flight conditions shall be computed for a standard passenger weight of 170 pounds and a minimum *ultimate* factor of safety of 1.50 shall be used, except that seats and berths need not be designed for the reduced weight gust conditions specified in CAR 04.2160. This shall not exempt the primary structure from such gust conditions.

04.2640—Structures to which safety belts are attached shall be capable of withstanding an *ultimate* load of 1,000 pounds per person applied through the safety belt and directed upward and forward at an angle of 45 degrees with the floor line.

04.265—Local Loads.—The primary structure shall be designed to withstand local loads caused by dead weights and control loads. Baggage compartments shall be designed to withstand loads corresponding to the maximum authorized capacity. The investigation of dead weight loads shall include a sufficient number of reduced weight gust conditions to insure that the most severe combinations have been investigated. See CAR 04.90 for standard weights.

04.266—Rigging Loads.—Structures braced by wires (or tie-rods) shall be capable of developing an ultimate factor of safety of 1.5 with respect to the *limit* loads due to rigging the wires to 20 per cent of their rated strength (strength of wire, not terminal). When the structure is such that all wires cannot be simultaneously rigged to 20 per cent of their rated loads, a rigging condition shall be assumed in which the average of the rigging loads, expressed in per cent, equals 20. (See also CAR 04.274.) The above condition need not be superimposed on other

loading conditions, but the Secretary may require additional investigation for residual rigging loads when such investigation appears necessary. (See also CAR 04.315.)

04.267—AIR LOADS ON STRUTS.—External wing-brace struts which are at an angle of more than 45 degrees with the plane of symmetry and which have a cross-sectional fineness ratio of more than 3 shall be assumed to act as lifting airfoils and shall be designed to carry the resultant transverse loads in combination with the specified axial loads. In computing the *limit* loads the strut sections shall be assumed to have a normal force coefficient equal to 1.0 and the total air load shall be based on the exposed area of the strut. The chord components and vertical reactions of such air load and the lift contributed by the strut shall not be considered in the analysis of the wing.

04.27—Multiplying Factors of Safety.

04.270—GENERAL.—In addition to the minimum factors of safety specified for each loading condition, the multiplying factors specified in Table 04–7 and the following paragraphs shall be incorporated in the structure. The total factor of safety required for any structural component or part equals the minimum factor of safety specified for the loading condition in question multiplied by the factors of safety hereinafter specified, except that certain multiplying factors may be included in others, as indicated in Table 04–7.

04.271—FITTINGS.—All fittings in the primary structure shall incorporate the multiplying factor of safety specified in Table 04–7. For this purpose fittings are defined as parts used to connect one primary member to another and shall include the bearing of those parts on the members thus connected. Continuous joints in metal plating and welded joints between primary structural members are not classified as fittings. (See also CAR 04.4030 and 04.4031.)

04.272—CASTINGS.—All castings used in the primary structure shall incorporate a multiplying factor of safety not less than that specified in Table 04–7.

04.273—PARALLEL DOUBLE WIRES.—When parallel double wires are used in wing lift trusses each wire shall incorporate a multiplying factor of safety not less than that specified in Table 04–7.

04.274—WIRES AT SMALL ANGLES.—Wire or tie-rod members of wing or tail surface external bracing shall incorporate a multiplying factor of safety computed as follows:

$K = L/2R$ (except that K shall not be less than 1.0), where

K = the additional factor,

R = the reaction resisted by the wire in a direction normal to the wing or tail surface plane, and

L = the load required in the wire to balance the reaction R.

04.275—DOUBLE DRAG TRUSSES.—Whenever double drag trussing is required by CAR 04.412, all drag wires shall incorporate a multiplying factor of safety varying linearly from 3.0, when the ratio of overhang to root chord of overhang is 2.0 or greater, to 1.20 when such ratio is 1.0 or less, assuming an equal division of drag load between the two systems.

04.276—TORQUE TUBES USED AS HINGES.—When steel torque tubes are employed in direct bearing against strap-type hinges they shall incorporate a multiplying factor of safety at the hinge point not less than that specified in Table 04–7. (See also CAR 04.422.)

04.277—CONTROL SURFACE HINGES AND CONTROL SYSTEM JOINTS.—Control surface hinges and control system joints subjected to angular motion, excepting ball or roller bearings and *AN* standard parts used in cable control systems, shall incorporate multiplying factors of safety not less than those specified in Table 04–7 with respect to the *ultimate* bearing strength of the softest material used as a bearing. For ball or roller bearings a *yield* factor of safety of 1.0 with respect to the manufacturer's non-Brinell rating is considered sufficient to provide an adequate *ultimate* factor of safety.

04.278—Wire Sizes.—(See CAR 04.403, 04.4032 and 04.412.)

04.3—PROOF OF STRUCTURE.

04.30—General.—Proof of compliance with the loading requirements outlined in CAR 04.2 shall be made in a manner satisfactory to the Secretary and may consist of structural analyses, load tests, flight tests, references to previously approved structures, or combinations of the above. Any condition which can be shown to be noncritical need not be further investigated.

04.300—Proof of Structural Analysis.—Structural analyses will be accepted as complete proof of strength only in the case of structural arrangements for which experience has shown such analyses to be reliable. References shall be given for all methods of analysis, formulae, theories and material properties which are not generally accepted as standard. The acceptability of a structural analysis will depend to some extent on the excess strength incorporated in the structure.

04.3000—The structural analysis shall be based on guaranteed minimum mechanical properties of the materials specified on the drawings, except in cases where exact mechanical properties of the materials used are determined.

04.3001—The effects of welding, form factors, stress concentrations, discontinuities, cutouts, instability, end fixity of columns and vibration shall be accounted for when such factors are present to such an extent as to influence the strength of the structure.

04.301—Combined Structural Analysis and Tests.—In certain cases it will be satisfactory to combine structural analysis procedure with the results of load tests of portions of the structure not subject to accurate analysis. In such cases test results shall be reduced to correspond to the mechanical properties of the materials actually used in the airplane. When a unit other than the specific one tested is incorporated in the airplane presented for certification, test results shall be reduced to correspond to the minimum guaranteed mechanical properties of the materials specified on the drawings.

04.302—Load Tests.—Proof of compliance with structural loading requirements by means of load tests only is acceptable provided that strength and proof tests (see CAR 04.126 and 04.127) are conducted to demonstrate compliance with CAR 04.200 and 04.201, respectively, and further provided that the following sub-paragraphs are complied with.

04.3020—The tests shall be supplemented by special tests or analyses to prove compliance with multiplying factor of safety requirements. (See CAR 04.27.)

04.3021—When a unit other than the specific one tested is incorporated in the airplane presented for certification, the results of *strength* tests shall be reduced to correspond to the minimum guaranteed mechanical properties of the materials specified on the drawings, unless test loads are carried at least 15 per cent beyond the required values.

04.3022—The determination of test loads, the apparatus used and the methods of conducting the tests shall be satisfactory to the Secretary.

04.3023—The tests shall be conducted in the presence of a representative of the Bureau unless otherwise directed by the Secretary.

04.303—Flight Load Tests.—Proof of strength by means of flight load tests will not be accepted unless the necessity therefor is established and the test methods are proved suitable to the satisfaction of the Secretary.

04.304—Load Tests Required.—The following load tests are required in all cases and shall be made in the presence of a representative of the Bureau unless otherwise directed by the Secretary:

(*a*) Strength tests of wing ribs. (See CAR 04.313.)
(*b*) Pressure tests of fuel and oil tanks. (See CAR 04.623.)
(*c*) Proof tests of tail and control surfaces. (See CAR 04.32.)
(*d*) Proof and operating tests of control systems. (See CAR 04.33 and CAR 04.331.)

04.31—Proof of Wings.—Proof of wings by structural analysis only shall be in accordance with CAR 04.300 except that the strength of stressed-skin wings shall be substantiated by load tests (CAR 04.302) or by combined structural analysis and tests (CAR 04.301).

04.310—Redundancies.—Wing cellules in which the division of loading between lift trusses and drag trusses is indeterminate shall be analyzed either by an acceptable method for indeterminate structures or by making assumptions which result in conservative design loads for all members.

04.311—Beams.—The following points shall be covered in the proof of strength of wing beams, in addition to any special types of possible failure peculiar to the structure.

04.3110—*Secondary Bending.*—When axial loads are present the required minimum *ultimate* factor of safety shall be introduced before the computation of the bending moments in order to insure that the required *ultimate* loads can be supported by the structure.

04.3111—*Lateral Buckling.*—The ability of beams to resist lateral buckling shall be proved.

04.3112—*Webs.*—The strength of shear webs shall be proved.

04.3113—When axial load is present tests are required to determine the effective "*EI*" in the case of truss-type beams and beams having unconventional web construction.

04.3114—*Joint Slippage in Wood Beams.*—When a joint in a wood beam is designed to transmit bending from one section of the beam to another or to the fuselage, the stresses in each part of the structure shall be calculated on the assumption that the joint is 100 per cent efficient (except in mid-bay for which see CAR 04.4110) and also under the assumption that the bending moment transmitted by the joint is 75 per cent of that obtained under the assumption of perfect continuity. Each part of the structure shall be designed to carry the most severe loads determined from the above assumptions.

04.3115—*Bolt Holes.*—In computing the area, moment of inertia, etc., of wood beams pierced by bolts, the diameter of the bolt hole shall be assumed to be one-sixteenth inch greater than the diameter of the bolt.

04.3116—In computing the ability of box beams to resist bending loads only that portion of the web with its grain parallel to the beam axis and one-half of that portion of the web with its grain at an angle of 45° to the beam shall be considered. The more conservative method of neglecting the web entirely may be employed.

04.312—Drag Trusses.—Drag struts shall be assumed to have an end fixity coefficient of 1.0 except in cases of unusually rigid restraint, in which a coefficient of 1.5 may be used.

04.313—Ribs.—Structural analysis of ribs, or their equivalent, is not acceptable as a satisfactory means of demonstrating their strength. Tests to at least 125% of the required *ultimate* load, and covering the most severe loading conditions for the ribs, are required. The following points shall apply in proving the strength of ribs.

04.3130—The load shall be suitably distributed between upper and lower wing surfaces unless a more severe distribution is used.

04.3131—The effects of ailerons and high-lift devices shall be properly accounted for.

04.3132—Rib tests shall simulate conditions in the airplane with respect to torsional rigidity of spars, fixity conditions, lateral support and attachment to spars.

04.314—COVERING.—Proof of strength of fabric covering is not required when standard grades of cloth and methods of attaching and doping are employed provided, however, that the Secretary may require special tests when it appears necessary to account for the effects of unusually high design airspeeds or slipstream velocities, or similar factors. When metal covering is employed its ability to perform its structural function shall be demonstrated by tests of typical panels or by other means acceptable to the Secretary. In particular, compliance with CAR 04.201 requires demonstration of the behavior of the covering under load in order to determine the effects of temporary deformations (wrinkles).

04.315—NON-PARALLEL WIRES.—When two or more wires are attached to a common point on the wing, but are not parallel, proper allowance for redundancies and the effects of rigging shall be made.

04.32—Proof of Tail and Control Surfaces.—Structural analyses of tail and control surfaces will be accepted as complete proof of compliance with *ultimate* load requirements only when the structure conforms with conventional types for which reliable analytical methods are available. Proof tests as defined in CAR 04.127 are required to prove compliance with *yield* load requirements.

04.320—Control surface tests shall include the horn or fitting to which the control system is attached.

04.321—In the analysis of control surfaces proper allowance shall be made for rigging loads in brace wires in cases where the counter wires do not go slack before the *ultimate* load is reached.

04.322—Analyses or individual load tests shall be conducted to demonstrate compliance with the multiplying factor of safety requirements outlined in CAR 04.27 for control surface hinges and brace wires.

04.33—Proof of Control Systems.—Structural analyses of control systems will be accepted as complete proof of compliance with *ultimate* load requirements only when the structure conforms with conventional types for which reliable analytical methods are available. Proof tests as defined in CAR 04.127 are required to prove compliance with *yield* load requirements.

04.330—In control system tests, the direction of test loads shall be such as to produce the most severe loading of the control system structure. The tests shall include all fittings, pulleys and brackets used to attach the control system to the primary structure.

04.331—OPERATION TEST.—An operation test shall be conducted by operating the controls from the pilot's compartment with the entire system so loaded as to correspond to the minimum *limit* control force specified for the design of the control system. (See Table 04–6.) In this test there shall be no jamming, excessive friction or excessive deflection.

04.332—Analyses or individual load tests shall be conducted to demonstrate compliance with the multiplying factor of safety requirements specified in CAR 04.27 for control system joints subjected to angular motion.

04.34—Proof of Landing Gear.—Structural analyses of landing gear will be accepted as complete proof of compliance with load requirements only when the structure conforms with conventional types for which reliable analytical methods are available. Analyses may be used to demonstrate compliance with the energy absorption requirements in certain cases. When such analyses are not applicable, dynamic tests shall be conducted to demonstrate compliance with energy absorption requirements.

04.340—Energy Absorption Tests.—When tests for energy absorption are required they shall be so conducted as to simulate the landing conditions for which energy absorption requirements are specified in CAR 04.440, and test data shall be obtained from which the maximum acceleration developed at the center of gravity of the airplane can be determined. When drop tests of wheels, tires and shock absorbers are conducted in a combination differing from that employed on the airplane, proper allowance and corrections shall be made for the errors thus introduced.

04.35—Proof of Hulls and Floats.—Structural analyses of hulls and auxiliary floats will be accepted as complete proof of compliance with load requirements only when the structure conforms with conventional types for which reliable analytical methods are available. The strength of the structure as a whole and its ability to distribute water loads from the bottom plating into the main structural members shall be demonstrated. See CAR 15 for the requirements for main floats.

04.36—Proof of Fuselages and Engine Mounts.—Structural analyses of fuselages and engine mounts will be accepted as complete proof of compliance with load requirements only when the structure conforms with conventional types for which reliable analytical methods are available.

04.360—The end fixity coefficient used in determining critical column loads shall in no case exceed 2.0. A value of 1.0 shall be used for all members in the engine mount. In doubtful cases, tests are required to substantiate the degree of restraint assumed.

04.361—Baggage Compartments.—The ability of baggage compartments to sustain the maximum authorized baggage loads under all required flight and landing conditions shall be demonstrated.

04.37—Proof of Fittings and Parts.—Proof of strength of all fittings and joints of the primary structure is required. Where applicable, structural analysis methods may be used. When such methods are inadequate, a load test is required. Compliance with the multiplying factor of safety requirements for fittings (CAR 04.27) shall be demonstrated.

04.370—Since the system of forces which designs a fitting does not necessarily include the forces which design the attaching members, all the forces acting in all the specified conditions shall be considered for every fitting. The strength of each part of a built-up fitting shall be investigated and proper allowance shall be made for the effects of eccentric loading when initially present or when introduced by deflection of the structure under load.

04.371—Bolts.—The allowable bearing load assumed for the threaded portion of a bolt shall not exceed 25 per cent of the rated shear strength of the bolt.

04.4—DETAIL DESIGN AND CONSTRUCTION.

04.40—General.—The primary structure and all mechanisms essential to the safe operation of the airplane shall not incorporate design details which experience has shown to be unreliable or otherwise unsatisfactory. The suitability of all design details shall be established to the satisfaction of the Secretary. Certain design features which have been found to be essential to the airworthiness of an airplane are hereinafter specified and shall be observed.

04.400—Materials and Workmanship.—The primary structure shall be made from materials which experience or conclusive tests have proved to be uniform in quality and strength and to be otherwise suitable for airplane construction. Workmanship shall be of sufficiently high grade as to insure proper continued functioning of all parts.

04.401—Fabrication Methods.—The methods of fabrication employed in constructing the primary structure shall be such as to produce a uniformly sound structure which shall also be reliable with respect to maintenance of the original strength under reasonable service conditions.

04.4010—*Gluing.*—Gluing may be used except in cases where inferior joints might result or where proper protection from moisture cannot be shown.

04.4011—*Torch Welding.*—Torch welding of primary structural parts may be used only for ferrous materials and for such other materials shown to be suitable therefor.

04.4012—*Electric Welding.*—Electric arc, spot or seam welding may be used in the primary structure when specifically approved by the Secretary for the application involved. Requests for approval of the use of electric welding shall be accompanied by information as to the extent to which such welding is to be used, drawings of the parts involved, apparatus employed, general methods of control and inspection, and references to test data substantiating the strength and suitability of the welds obtained.

04.4013—*Brazing and Soldering.*—The use of brazing and soldering in joining parts of the primary structure is prohibited except that brazing may be used in special cases when the suitability of the method and application can be definitely established to the satisfaction of the Secretary.

04.4014—*Protection.*—All members of the primary structure shall be suitably protected against deterioration or loss of strength in service due to corrosion, abrasion, vibration or other causes. This applies particularly to design details and small parts. In seaplanes special precautions shall be taken against corrosion from salt water, particularly where parts made from different metals are in close proximity. All exposed wood structural members shall be given at least two protective coatings of varnish or approved equivalent. Built-up box spars and similar structures shall be protected on the interior by at least one coat of varnish or approved equivalent and adequate provisions for drainage shall be made. Due care shall be taken to prevent coating of the gluing surfaces.

04.4015—*Inspection.*—Inspection openings of adequate size shall be provided for such vital parts of the aircraft as require periodic inspection.

04.402—Joints, Fittings and Connecting Parts.—In each joint of the primary structure the design details shall be such as to minimize the possibility of loosening of the joint in service, progressive failure due to stress concentration, and damage caused by normal servicing and field operations. (See CAR 04.271 for multiplying factors of safety required.)

04.4020—*Bolts, Pins and Screws.*—All bolts and screws in the structure shall be of uniform material of high quality and of first-class workmanship. Machine screws shall not be used in the primary structure unless specifically approved for such use by the Secretary. The use of an approved locking device or method is required for all bolts, pins and screws.

04.4021—*Wood Screws.*—The use of wood screws in the primary structure is prohibited except in special cases when the suitability of the particular application is proved to the satisfaction of the Secretary.

04.4022—*Eyebolts.*—Special eyebolts and similar special bolts shall have a fillet between the head and the shank of at least ¼ the diameter of the bolt when used in control surfaces or at other locations where they might be subjected to bending or vibration.

04.4023—*Castings.*—Castings used in the primary structure shall incorporate the multiplying factor of safety specified in CAR 04.272 and shall be of such material and design as to insure the maximum degree of reliability and freedom from defects. The Secretary reserves the right to prohibit the use of castings where such use is deemed to be unairworthy.

04.403—Tie-Rods and Wires.—The minimum size of tie-rod which may be used in primary structure is No. 6–40. The corresponding minimum allowable size of single-strand hard wire is No. 13 (0.072-inch diameter).

04.4030—*Wire Terminals.*—The assumed terminal efficiency of single-strand hard wire shall not be greater than 85 per cent.

04.4031—*Wire Anchorages.*—A fitting attached to a wire or cable up to and including the 3,400-pound size shall have at least the rated strength of the wire or cable, and the multiplying factor of safety for fittings (CAR 04.271) is not required in such cases. In the case of fittings to which several tie-rods or wires are attached, this requirement applies separately to each portion of the fitting to which a tie-rod or wire is attached, but does not require simultaneous application of rated wire loads. The end connections of brace wires shall be such as to minimize restraint against bending or vibration.

04.4032—*Counter Wire Sizes.*—(See also CAR 04.274 and 04.275.) In a wire-braced structure the wire sizes shall be such that any wire can be rigged to at least 10 per cent of its rated strength without causing any other wire to be loaded to more than 20 per cent of its rated strength. As used here "rated strength" refers to the wire proper, not the terminal.

04.404—General Flutter Prevention Measures.—The Secretary reserves the right to require special provisions against flutter in any case when such provisions appear to him to be necessary.

04.4040—*Vibration Tests.*—Experimental determination of the natural frequency of vibration of certain components of the airplane is required in cases when there are indications of dangerously low frequencies or of coincidence of the natural frequencies of two or more separate structural components.

04.41—Detail Design of Wings.

04.410—External Bracing.—When streamline wires are used for external lift bracing they shall be double unless the design complies with the lift-wire-cut condition specified in CAR 04.2161. (See also CAR 04.273.)

04.4100—*Wire-Braced Monoplanes.*—If monoplane wings are externally braced by wires only, the right and left sides of the bracing shall be independent of each other so that an unsymmetrical load from one side will not be carried through the opposite wires before being counteracted, unless the design complies with the following conditions:

(*a*) The minimum true angle between any external brace wire and a spar is 14°.

(*b*) The counter (landing) wires are designed to remain in tension at least up to the *limit* load.

(*c*) The landing and flying wires are double.

04.4101—Multiple-strand cable shall not be used in lift trusses.

04.4102—*Jury Struts.*—Clamps shall not be used for the attachment of jury struts.

04.411—Wing Beams.—Provisions shall be made to reinforce wing beams against torsional failure, especially at the point of attachment of lift struts, brace wires and aileron hinge brackets.

04.4110—*Wing Beam Joints.*—Joints in metal beams (except pinned joints) and joints in mid-bays of wood beams shall maintain 100 per cent efficiency of the beam with respect to bending, shear and torsion.

04.412—DRAG TRUSS.—Fabric-covered wing structures having a cantilever length or overhang such that the ratio of span of overhang to chord at root of overhang is greater than 1.75 shall have a double system of internal drag trussing spaced as far apart as possible, or other means of providing equivalent torsional stiffness. In the former case counter wires shall be of the same size as the drag wires. (See also CAR 04.275.)

04.4120—Multiple-strand cable shall not be used in drag trusses unless such use is substantiated to the satisfaction of the Secretary.

04.413—AILERON AND FLAP ATTACHMENTS.—Aileron and flap attachment ribs or brackets shall be rigidly constructed and firmly attached to the main wing structure in order to reduce wing flutter tendencies.

04.414—INTERNALLY-BRACED BIPLANES.—Internally-braced biplanes shall be provided with N or I struts to equalize deflections, and the effect of such struts shall be considered in the stress analysis.

04.415—FABRIC COVERING.—Fabric covering shall comply with the requirements of CAR 04.400 and shall be attached in a manner which will develop the necessary strength, with due consideration for slip-stream effects. (See CAR 04.314.)

04.416—METAL-COVERED WINGS.—The detail design of such wings shall incorporate suitable provision against buckling or wrinkling of metal covering as specified in CAR 04.201 and 04.314.

04.417—LIFT TRUSS SYSTEM.—All structural members in the wing lift truss system which transmit direct loads from the landing gear shall be overstrength with respect to landing loads, so as to reduce the probability of damaging the wing in severe landings. This will require that, for any given landing condition, the minimum margin of safety in the lift truss structure shall be greater than the minimum margin of safety in the landing gear structure for the same condition.

04.42—Detail Design of Tail and Control Surfaces.

04.420—INSTALLATION.—Movable tail surfaces shall be so installed that there is no interference between the surfaces or their bracing when any one is held in its extreme position and any other is operated through its full angular movement.

04.421—STOPS.—When an adjustable stabilizer is used, stops shall be provided at the stabilizer to limit its movement, in the event of failure of the adjusting mechanism, to a range equal to the maximum required to balance the airplane. (See also CAR 40.4261.)

04.422—HINGES.—Hinges of the strap type bearing directly on torque tubes are permissible only in the case of steel torque tubes which have a multiplying factor of safety as specified in CAR 04.276. In other cases sleeves of suitable material shall be provided for bearing surfaces.

04.4220—Clevis pins may be used as hinge pins provided that they are made of material conforming with, or the equivalent of, S. A. E. Specification 2330.

04.423—ELEVATORS.—When separate elevators are used they shall be rigidly interconnected.

04.424—AILERONS.—Ailerons attached to internally-braced wings, to wings braced by wires only or to wings which in the opinion of the Secretary are susceptible to flutter, shall be statically balanced about their hinge lines when in the neutral position. A special ruling shall be obtained from the Secretary when such balance is obtained by means of a single balance weight for each aileron, or when the aileron control system is irreversible.

04.425—WING FLAPS.—Flaps shall be so installed as not to induce flutter or appreciable buffeting.

04.426—TABS.—Control surface trailing-edge tabs shall be statically balanced about their hinge lines unless an irreversible non-flexible tab control system is used. The installation shall be such as to prevent development of any free motion of the tab.

04.4260—When trailing-edge tabs are used to assist in moving the main surface (balancing tabs), care shall be taken in proportioning areas and relative movements so that the main surface is not aerodynamically overbalanced at any time.

04.4261—Elevator trailing-edge tab systems shall be equipped with stops which limit the travel of the tab to the angular values provided for in the structural report. The range of tab movement shall be sufficient to result in a speed of not more than 90 miles per hour in a glide with power off, under the loading condition of most forward center of gravity certified.

04.427—TAIL SURFACE BALANCING.—In the case of airplanes having a high speed in level flight greater than 150 miles per hour, the dynamic balance coefficient of the rudder and of each separate elevator as computed about the point of intersection of the hinge line with the center line of the fuselage shall be not more than 0.08. This coefficient is non-dimensional and consists of a fraction whose numerator is the resultant weight product of inertia of the control surface and whose denominator is equal to the weight multiplied by the aerodynamic area of the control surface. The resultant product of inertia is obtained from the algebraic sum of the products of inertia in the four quadrants, considering the products of inertia in the first and third quadrants as positive and those in the second and fourth quadrants as negative. If the rudder is completely mass-balanced the requirements for elevators may be modified upon application to the Secretary.

04.43—Detail Design of Control Systems.

04.430—INSTALLATION.—Proper precautions shall be taken with respect to control systems to eliminate the possibility of jamming, interference from cargo, passengers or loose objects, and chafing or slapping of cables against parts of the airplane. All pulleys shall be provided with satisfactory guards. A control column or stick located between a pilot and a passenger shall not be used unless a throw-over type of wheel control is incorporated.

04.431—STOPS.—All control systems shall be provided with stops which positively limit the range of motion of the control surfaces. Stops shall be capable of withstanding the loads corresponding to the design conditions for the control system.

04.432—JOINTS.—Bolts with castellated nuts safetied with cotter pins or with an approved type of self-locking nut shall be used throughout the control system, except that the use of clevis pins in standard cable ends, thimbles and shackles is satisfactory for light airplanes as defined in CAR 04.01.

04.433—WELDS.—Welds shall not be employed in control systems to carry tension without reinforcement from rivets or bolts.

04.434—FLAP CONTROLS.—The flap operating mechanism shall be such as to prevent sudden, inadvertent or automatic opening of the flap at speeds above the design speed for the extended flap conditions. The time required to fully extend or retract flaps shall not be less than 15 seconds, unless it can be demonstrated to the satisfaction of the Secretary that the operation of the flaps in a lesser time does not result in unsatisfactory flight characteristics. Means shall be provided to retain flaps in their fully retracted position and to indicate such position to the pilot.

04.435—TAB CONTROLS.—Tab controls shall be irreversible and non-flexible, unless the tab is statically balanced about its hinge line. Proper precautions shall be taken against the possibility of inadvertent or abrupt tab operation and operation in the wrong direction.

20078°—37——3

04.4350—When adjustable elevator tabs are used for the purpose of trimming the airplane, a tab position indicator shall be installed and means shall be provided for indicating to the pilot a range of adjustment suitable for safe take-off and the directions of motion of the control for nose-up and nose-down motions of the airplane.

04.436—Spring Devices.—The use of springs in the control system either as a return mechanism or as an auxiliary mechanism for assisting the pilot (bungee device) is prohibited except under the following conditions:

(*a*) The airplane shall be satisfactorily maneuverable and controllable and free from flutter under all conditions with and without the use of the spring device.

(*b*) In all cases the spring mechanism shall be of a type and design satisfactory to the Secretary.

(*c*) Rubber cord shall not be used for this purpose.

04.437—Single-Cable Controls.—Single-cable controls are prohibited except in special cases in which their use can be proved to be satisfactory.

04.438—Control System Locks.—When a device is provided for locking the control surfaces in position while the aircraft is on the ground or water, the following provisions shall apply:

(*a*) The locking device shall be so installed that it can be completely released from all controls with ease and rapidity by a person sitting in either pilot's seat.

(*b*) For landplanes the device shall be so installed that, until released to provide full manipulation of all controls, it presents a definite obstruction to taxiing the aircraft or starting a take-off. This shall be accomplished by locking the throttle control or by some equally effective measure. For seaplanes the device may, if desired, be so installed as to permit maneuvering on the water with the controls locked, but in any event the means of locking shall definitely prevent the seaplane from being taken into the air.

04.44—Detail Design of Landing Gear.

04.440—Shock Absorption.—All landing gear (including tail gear installations) shall be provided with shock-absorbing systems which will permit the airplane to be landed under the conditions specified in CAR 04.2411 and CAR 04.2420 without exceeding the ultimate load used in the analysis of any landing gear member. (See CAR 04.340 for proof of absorption capacity.) If the design of the shock-absorbing system is such that the above method of specifying the required energy absorption capacity appears to give irrational results, an alternate method will be considered upon presentation of pertinent data.

04.441—Shock-Absorbing Systems.—The shock-absorbing systems employed shall incorporate suitable means for absorbing the shocks developed in taxiing or running over rough ground.

04.442—Wheels.—Main landing gear wheels shall be of a type or model certificated by the Secretary in accordance with the provisions of CAR 15 and shall not be subjected to static loads in excess of those for which they are certificated. Tail wheels may be of any type or model and are not certificated. Nose wheels are subject to special rulings to be made by the Secretary.

04.4420—For the purpose of these regulations main landing gear wheels are considered as those nearest the airplane center of gravity with respect to fore-and-aft location.

04.4421—For the purpose of these regulations a tail wheel is considered as one which supports the tail of a conventional airplane in the three-point landing attitude. A nose wheel is considered to be a wheel supporting the nose of the airplane when the two main wheels are located behind the center of gravity.

04.443—TIRES.—A landing gear wheel may be equipped with any make or type of tire, provided that the tire is a proper fit on the rim of the wheel and provided that the tire manufacturer's recommended load rating is not exceeded.

04.4430—When specially constructed tires are used to support an airplane, the wheels shall be plainly and conspicuously marked to that effect. Such markings shall include the make, size, number of plies and identification marking of the proper tire.

04.444—RETRACTING MECHANISM.—When retractable landing wheels are used, visual means shall be provided for indicating to the pilot, at all times, the position of the wheels. Separate indicators for each side are required when each side is separately operated unless a single indicator is obviously satisfactory. In addition, an aural or other equally effective indicator shall be provided and shall function continuously after the throttle is closed until the gear is down and locked.

04.4440—A positive lock shall be provided for the wheels in the extended position, unless a rugged irreversible mechanism is used.

04.4441—Manual operation of retractable landing gears shall be provided for.

04.45—Hulls and Floats.—(See also CAR 04.46.)

04.450—BUOYANCY (MAIN SEAPLANE FLOATS).—Main seaplane floats shall have a buoyancy in excess of that required to support the gross weight of the airplane in fresh water as follows:

(*a*) 80 per cent in the case of single floats,
(*b*) 90 per cent in the case of double floats.

04.4500—Main seaplane floats for use on aircraft of 2,500 pounds or more maximum authorized weight shall contain at least five water-tight compartments of approximately equal volume. Main seaplane floats for use on aircraft of less than 2,500 pounds maximum authorized weight shall contain at least four such compartments.

04.451—BUOYANCY (BOAT SEAPLANES).—The hulls of boat seaplanes and amphibians shall be divided into water-tight compartments in accordance with the following requirements:

(*a*) In aircraft of 5,000 pounds maximum authorized weight or more the compartments shall be so arranged that, with any two adjacent compartments flooded, the hull and auxiliary floats (and tires, if used) will retain sufficient buoyancy to support the gross weight of the aircraft in fresh water.

(*b*) In aircraft of 1,500 to 5,000 pounds maximum authorized weight the compartments shall be so arranged that, with any one compartment flooded, the hull and auxiliary floats (and tires, if used) will retain sufficient buoyancy to support the maximum authorized weight of the aircraft in fresh water.

(*c*) In aircraft of less than 1,500 pounds maximum authorized weight water-tight subdivision of the hull is not required.

(*d*) Bulkheads may have water-tight doors for the purpose of communication between compartments.

04.452—WATER STABILITY.—Auxiliary floats shall be so arranged that when completely submerged in fresh water, they will provide a righting moment which is at least 1.5 times the upsetting moment caused by the aircraft being tilted. A greater degree of stability may be required in the case of large flying boats, depending on the height of the center of gravity above the water level, the area and location of wings and tail surfaces, and other considerations.

04.453—FLOAT DESIGN.—In designing the bow portion of floats and hulls suitable provision shall be made for the effects of striking floating objects.

04.46—Fuselage and Cabins.

04.460—PROVISION FOR TURN-OVER.—The fuselage and cabins shall be designed to protect the passengers and crew in the event of a complete turn-over and adequate provision shall be made to permit egress of passengers and crew in such event. This requirement may be suitably modified when the possibility of a complete turn-over in landing is remote. (See also CAR 04.247 for loading requirements.)

04.461—DOORS.—Closed cabins on all aircraft carrying passengers shall be provided with at least one adequate and easily accessible external door.

04.4610—No passenger door shall be located in the plane of rotation of a propeller, nor within 5° thereof as measured from the propeller hub.

04.4611—The passenger door on landplanes certificated for airline service shall be located on the left-hand side of the cabin.

04.462—EXITS.—Closed cabins on aircraft carrying more than 5 passengers shall be provided with emergency exits, in addition to the one external door required by CAR 04.461, consisting of movable windows or panels or of additional external doors which provide a clear and unobstructed opening, the minimum dimensions of which shall be 19 inches by 26 inches if elliptical or rectangular, or 26 inches in diameter if circular. The location and the method of operation of emergency exits shall be approved by the Secretary. If the pilot is in a compartment separate from the cabin, passage through such compartment shall not be considered as an emergency exit for the passengers. The number of emergency exits required is as follows:

(*a*) Aircraft with a total seating capacity of more than 5 persons, but not in excess of 15, shall be provided with at least one emergency exit or one suitable door in addition to the main door specified in CAR 04.461. This emergency exit, or second door, shall be on the opposite side of the cabin from the main door. If desired, an additional emergency exit may be provided in the top of the cabin, but such an installation shall not obviate the necessity for an exit on each side.

(*b*) Aircraft with a seating capacity of more than 15 persons shall be provided with an additional emergency exit or door either in the top or side of the cabin for every additional 7 persons or fraction thereof above 15, except that not more than 4 exits, including doors, will be required if the arrangement and dimensions are suitable for the purpose intended.

04.463—PILOT'S COMPARTMENT.—The pilot's compartment shall be so constructed as to afford suitable ventilation and adequate vision to the pilot under normal flying conditions. In cabin aircraft the windows shall be so arranged that they may be readily cleaned or easily opened in flight to provide forward vision for the pilot. The ventilation requirements of CAR 04.467 shall also apply to the pilot's compartment.

04.4630—The pilot and the primary control units, excluding cables and control rods, shall be so located with respect to the propellers that no portion of the pilot or controls lies in the region between the plane of rotation of any propeller and the surface generated by a line passing through the center of the propeller hub and making an angle of 5° forward or aft of the plane of rotation of the propeller.

04.4631—A metal identification plate shall be permanently affixed in a visible location in the pilot's compartment of each airplane. This plate shall contain the manufacturer's name, the date of manufacture, the manufacturer's serial number and the model designation. The manufacturer shall specify the fuel capacity of each fuel tank on the manufacturer's identification plate, or on or adjacent to the fuel shut-off valves in the pilot's compartment.

04.4632—There shall be placed, in full view of the pilot, such placards as are required in CAR 04.74 (operation limitations) and in CAR 04.723 (emergency ceiling).

04.4633—The windows and windshields of the pilot's compartment in airplanes certificated for airline service shall be so arranged as to provide satisfactory forward vision and protection under all conditions and, to accomplish this, particular attention shall be paid to the following detail requirements:

(*a*) The windshield shall be constructed of high grade glass at least ⅜ inch thick and having at least 5 laminations held together with a strong binder, except that a substitute therefor is permissible provided that it has equivalent strength and satisfactory optical properties. The structure supporting the windshield shall be of equivalent strength.

(*b*) Windshields shall be so installed that they can be easily opened in flight and shall be so arranged that the air stream and snow or rain are deflected across the opening, or to provide equivalent results.

(*c*) The pilot's compartment shall be so constructed and arranged as to prevent glare or reflections which would interfere with the vision of either pilot, particularly while flying at night. The aircraft shall be flown by a Bureau representative during hours of darkness to determine compliance with this provision.

04.4634—The pilot's compartment in airplanes certificated for airline service shall be so constructed as to prevent any leakage into it when the airplane is flying in rain or snow.

04.4635—Two seats shall be installed side-by-side in the pilot's compartment of airplanes certificated for airline service from either of which the airplane shall be fully and readily controllable. If any difference exists as to convenience of the instruments and controls necessary for safe flight such difference should favor the left-hand seat. The left-hand seat shall be known as the first pilot's seat and the right-hand one as the second pilot's seat.

04.4636—The navigation instruments for use by the pilot in airplanes certificated for airline service shall be so installed as to be easily visible to him with the minimum practicable deviation from his normal position and line of vision when he is looking out and forward along the flight path and they shall also be visible to the second pilot.

04.4637—All airplanes certificated for airline service shall be provided with a door or an adequate openable window between the pilot's compartment and the passengers' cabin, which shall be so arranged as to permit direct oral communication between either pilot and the passengers. When a door is provided it shall be equipped with a locking means which shall prevent passengers from opening such door while in flight.

04.464—Passenger Chairs.—Seats or chairs for passengers shall be securely fastened in place in both open and closed airplanes, whether or not the safety belt load is transmitted through the seat. (See CAR 15 and CAR 04.2640 for safety belt requirements.)

04.465—Baggage Compartments.—Each baggage and mail compartment shall bear a placard stating the maximum allowable weight of contents, as determined by the structural strength of the compartment (CAR 04.265) and by flight test (CAR 04.742). Suitable means shall be provided to prevent the contents of mail and baggage compartments from shifting.

04.466—Reinforcement Near Propellers.—Surfaces near propeller tips shall be suitably stiffened against vibration and the effects of ice thrown from the propeller. (See CAR 04.611 for clearance requirements.)

04.467—Passenger Compartments.—A suitable ventilation system shall be provided which will preclude the presence of fuel fumes and dangerous traces of carbon monoxide in each passenger compartment.

04.5—EQUIPMENT.

04.50—General.—The equipment required shall be dependent upon the type of operation for which certification is to be made. The requirements specified herein (CAR 04.5) shall be the basic equipment requirements and such additional equipment as may be specified in other sections of the Civil Air Regulations for specific special cases shall be supplemental hereto unless otherwise specified.

04.500—Each item of equipment specified in the Civil Air Regulations shall be of a type and design satisfactory to the Secretary, shall be properly installed and shall function to the satisfaction of the Secretary. Items of equipment for which certification is required shall have been certificated in accordance with the provisions of CAR 15 or previous regulations.

04.501—An approved life preserver or flotation device is one approved by the Secretary for such usage on sea-going vessels.

04.502—Fire extinguishing apparatus approved by the Underwriters Laboratories is considered to be of an approved type.

04.503—Approved radio equipment is such as has been approved by the Secretary as complying with the current issue of "Specifications for the Approval of Airline Aircraft Radio Equipment".

04.51—Non-Airline Carrier (NAC) Airplanes.—Airplanes which are certificated as non-airline carriers, shall have at least the following equipment:

04.510—NAC Landplanes—Visual-Contact Day Flying (Within 100 Miles of a Fixed Base):

(*a*) One airspeed indicator. (See CAR 04.5800 for installation requirements.)
(*b*) One altimeter.
(*c*) A tachometer for each engine.
(*d*) An oil-pressure gauge when an oil-pressure system is employed.
(*e*) A water thermometer for each water-cooled engine.
(*f*) An oil thermometer for each air-cooled engine.
(*g*) A manifold-pressure gauge, or equivalent, for each altitude engine. (See CAR 13.)
(*h*) A fuel quantity gauge. (See CAR 04.624 for requirements.)
(*i*) Certificated safety belts for all passengers and members of the crew. (See CAR 15 for belt requirements and CAR 04.5810 for installation requirements.)
(*j*) A portable fire extinguisher in cabin airplanes, which extinguisher shall be of an approved type which shall have a minimum capacity, if carbon tetrachloride, of one quart or, if carbon dioxide, of two pounds or, if other, of equivalent effectiveness; except that any extinguisher of not less than half the above capacity may be used in an airplane equipped with an engine whose maximum rating is 40 horsepower or less. (See CAR 04.5811 for installation requirements.)
(*k*) Landing gear position indicator for retractable main landing gear. (See CAR 04.444 for requirements.)
(*l*) A device for measuring or indicating the amount of oil in the tanks. (See CAR 04.633 for requirements.)
(*m*) A first aid kit, in airplanes arranged for carrying passengers.
(*n*) A log-book for the airplane and one for each engine. (See CAR 01 for requirements.)
(*o*) Rigging information for airplanes with wire-braced wings, either in the form of a sketch or listed data, which shall include sufficient information to permit proper rigging.

04.511—NAC Landplanes—Visual-Contact Day Flying (Unlimited Distance).—Airplanes of this category shall have the equipment specified in CAR 04.510 and, in addition, there shall be installed:

(*a*) A magnetic compass. (See CAR 04.5803 for installation requirements.)

04.512—NAC LANDPLANES—VISUAL-CONTACT NIGHT FLYING.—Airplanes of this category shall have the equipment specified in CAR 04.511 and, in addition, there shall be installed:

(*a*) A set of certificated standard forward position lights in combination with a certificated tail light. (See CAR 15 for light requirements and CAR 04.5827 for installation requirements.)

(*b*) Two electric landing lights, if the aircraft is operated for hire. (See CAR 04.5825 for installation requirements.)

(*c*) Certificated landing flares, if the aircraft is operated for hire, as follows (see CAR 15 for flare requirements and CAR 04.5813 for installation requirements):

Airplanes of 3,500 pounds maximum authorized weight or less—5 Class 3 flares or 3 Class 2 flares.

Airplanes of between 3,500 pounds and 5,000 pounds maximum authorized weight—4 Class 2 flares.

Airplanes of 5,000 pounds maximum authorized weight or more—2 Class 1 flares or 3 Class 2 flares and one Class 1 flare.

If desired, airplanes of less than 5,000 pounds maximum authorized weight may carry the flare equipment specified for heavier airplanes.

(*d*) A storage battery suitable as a source of energy supply for the lights installed. (See CAR 04.5821 for installation requirements.)

(*e*) Radio equipment, if the aircraft is operated for hire, as follows: A radio beacon and weather broadcast receiver operating within the frequency range of 200 to 400 kilocycles. Under normal atmospheric conditions this receiver must be capable of receiving with a range of 100 miles intelligence emanated from a radio range or weather broadcast station the equivalent of an SBRA installation.

(*f*) A set of spare fuses. (See CAR 04.5822 for installation requirements.)

04.513—NAC LANDPLANES—INSTRUMENT DAY FLYING.—Airplanes of this category shall have the equipment specified in CAR 04.511 and, in addition, there shall be installed:

(*a*) Radio Equipment: Same as CAR 04.512 (*e*), whether the aircraft is operated for hire or not, and, in addition, a radio transmitter operated on 3105 kilocycles with a power output sufficient to establish communication at a distance of at least 100 miles under normal atmospheric conditions. Additional frequencies may be employed subject to approval of the Federal Communications Commission.

(*b*) A gyroscopic rate-of-turn indicator.

(*c*) A bank indicator. (Instruments (*b*) and (*c*) may be combined in one instrument if desired or may be omitted if a gyroscopic artificial horizon instrument is installed.)

(*d*) A sensitive altimeter which shall be adjustable for changes in barometric pressure and compensated for changes in temperature.

(*e*) A clock with a sweep-second hand.

(*f*) A storage battery suitable as a source of energy supply for the radio equipment installed. (See CAR 04.5821 for installation requirements.)

(*g*) A generator.

(*h*) A set of spare fuses. (See CAR 04.5822 for installation requirements.)

04.514—NAC LANDPLANES—INSTRUMENT NIGHT FLYING.—Airplanes of this category shall have the equipment specified in CAR 04.512 and CAR 04.513 combined. The storage battery shall be suitable as a source of energy supply for both the radio equipment and the lights.

04.515—NAC SEAPLANES AND AMPHIBIANS.—The equipment requirements for seaplanes and amphibians shall be the same as specified for landplanes (CAR 04.510 through 04.514) except that seaplanes and amphibians shall not be certificated for operation over water out of sight of land unless they have at least the equipment specified in CAR 04.511, and except that all certificated seaplanes and amphibians shall also have an approved life preserver or flotation device for each person for which there is a seat, and except that all seaplanes and amphibians certificated for night operation shall also have a white anchor light. (See CAR 04.5824 for installation requirements.)

04.52—Airline Carriers—Goods (ACG).—(To be supplied).

04.53—Airline Carriers—Passengers (ACP).—Airplanes certificated for use as airline passenger carriers shall have installed at least the following equipment:

04.530—ACP Landplanes—Visual-Contact Day Flying.—The same as specified in CAR 04.511 and, in addition, the following:

(*a*) An electrically heated pitot tube, or equivalent, for the air speed indicator.

(*b*) One additional portable fire extinguisher of the type specified in CAR 04.510 (j). (See CAR 04.5811 for installation requirements.)

(*c*) Fixed fire extinguishing apparatus of an approved type for each engine compartment.

(*d*) Safety belt sign or signal. (See CAR 04.5812 for installation requirements.)

(*e*) Radio equipment as follows: An *approved* two-way radio system consisting of a transmitter and receiver capable of operating on the frequency or frequencies specified by the Federal Communications Commission and independent of any facility provided by the Federal Government. In addition an *approved* beacon and weather broadcast receiver is required. The question of power and or range of this equipment will be determined by the Secretary upon application for a Letter of Authority to operate a scheduled service.

(*f*) A set of spare fuses. (See CAR 04.5822 for installation requirements.)

04.531—ACP Landplanes—Visual-Contact Night Flying.—The same as specified in CAR 04.530 and, in addition, the following:

(*a*) A set of certificated airline forward position lights or, alternatively, a combination consisting of a set of certificated standard forward position lights and a set of certificated auxiliary position lights. In any case a certificated tail light shall also be installed. (See CAR 15 for light requirements and CAR 04.5827 for installation requirements.)

(*b*) A storage battery of sufficient capacity for all lights installed. (See CAR 04.5821 for installation requirements and CAR 04.5823.)

(*c*) Two electric landing lights. (See CAR 04.5825 for installation requirements.)

(*d*) Certificated landing flares as follows: 2 Class 1 flares or 3 Class 2 flares and one Class 1 flare. (See CAR 15 for flare requirements and CAR 04.5813 for installation requirements.)

(*e*) Instrument lights. (See CAR 04.5826 for installation requirements.)

(*f*) Cabin lights in all passenger cabins and compartments.

(*g*) A generator. (See CAR 04.5823 for requirements.)

(*h*) Radio equipment same as CAR 04.530 (e).

04.532—ACP Landplanes—Instrument Day Flying.—The same as specified in CAR 04.530 except 04.510 (b) and, in addition, the following:

(*a*) A gyroscopic rate-of-turn indicator combined with a bank indicator.

(*b*) A gyroscopic instrument showing bank and pitch.

(*c*) A gyroscopic compass.

(*d*) A rate-of-climb indicator.

(*e*) Two sensitive-type altimeters, both of which shall be adjustable for changes in barometric pressure and compensated for changes in temperature.

(*f*) A free air thermometer of the distance type with an indicating dial in the cockpit.

(*g*) A clock with a sweep-second hand.

(*h*) A vacuum gauge, installed in the lines leading to instruments (*a*), (*b*) and (*c*).

(*i*) Radio equipment as follows: Same as CAR 04.530 (e) and, in addition, an *approved* auxiliary beacon and weather broadcast receiver capable of receiving radio range signals and emergency broadcast. Such receiver system is normally operated from the main source of electrical supply of the aircraft but in the event of failure of the normal power source may be switched to operate from an independent power supply. This system shall include an independent power supply capable of operating such auxiliary receiver continuously for a period of at least four hours. It is also required that this emergency receiver operate from an independent antenna. Two sets of head-phones shall be required in the aircraft at all times. Effective January 1, 1938, there shall also be installed in such aircraft an *approved radio direction finder*,

covering at least the frequency range of 200 to 400 kilocycles. The design of the radio direction finder shall be such as to permit its regular operation in the taking of line bearings on any station to which the direction finder may be tuned without altering the course of the aircraft. The radio direction finder shall also be provided with means to eliminate, insofar as possible, consistent with the advancement of the art, that type of interference commonly known as rain, snow, sleet or dust static. The radio direction finder shall provide means for audible reception of radio range and weather broadcast messages. This radio direction finder may be installed in lieu of the emergency receiver described herein provided that an independent power source equal to that described for the emergency receiver is employed on either the beacon receiver required under CAR 40.235 or on this radio direction finder. Effective November 1, 1937, there shall be installed on such aircraft an *approved radio antenna system,* which has for its purpose the collection of radio range signals, weather broadcast and emergency messages transmitted within the frequency range of 200 to 400 kcs. The design of this antenna system shall be such as to eliminate insofar as possible, consistent with the advancement of the art, that type of interference commonly known as rain, snow, sleet or dust static. This antenna system shall be so designed that it will operate efficiently when used in conjunction with a receiver installed aboard such aircraft which has for its primary purpose the reception of radio range signals, weather broadcast and emergency messages.

(*j*) A deicing signal to indicate icing conditions in the carburetor if the deicing device specified in CAR 04.6291 requires the manipulation of controls.

(*k*) A storage battery suitable as a source of energy supply for the radio equipment installed. (See CAR 04.5821 for installation requirements.)

(*l*) A generator. (See CAR 04.5823 for installation requirements.)

04.533—ACP LANDPLANES—INSTRUMENT NIGHT FLYING.—The same as specified in CAR 04.531 and CAR 04.532 combined. The storage battery, in this case, shall be of sufficient capacity for all radio equipment and all lights installed.

04.534—ACP SEAPLANES AND AMPHIBIANS.—The same as specified for landplanes (CAR 04.530 through CAR 04.533) and including the life preservers specified in CAR 04.515, except that when certificated for night operation, they shall also have installed the anchor light specified in CAR 04.515.

04.54—(Unassigned).

04.55—(Unassigned).

04.56—(Unassigned).

04.57—(Unassigned).

04.58—Installation Requirements.—The following regulations apply to the installation of specific items of equipment and are additional to the regulations of CAR 04.50.

04.580—INSTRUMENTS.—The following regulations shall apply to the installation of instruments when such instruments are required by these regulations.

04.5800—*Air Speed Indicator.*—This instrument shall be so installed as to indicate true air speed at sea level with the maximum practicable accuracy but in no event shall the instrument error be more than plus or minus 5 miles per hour at approximately 0.9 V_L. (See CAR 04.111.)

04.5801—*Powerplant Instruments and Controls.*—(See CAR 04.650 and 04.651.)

04.5802—*Fuel Quantity Gauge.*—(See CAR 04.624.)

04.5803—*Magnetic Compass.*—This instrument shall be properly damped and compensated and shall be located where it is least affected by electrical disturbances and magnetic influences.

04.5804—*Navigation Instruments.*—Navigation instruments for use by the pilot shall be so installed as to be easily visible to him with the minimum practicable deviation from his normal position and line of vision when he is looking out and forward along the flight path and they shall also be visible to the second pilot.

04.5805—*Gyroscopic Instruments.*—All gyroscopic instruments shall derive their energy from engine-driven pumps or from auxiliary power units. Each source of energy supply and its attendant complete installation shall comply with the instrument manufacturer's recommendations for satisfactory instrument operation. On multi-engine aircraft each instrument shall have two separate sources of energy, either one of which shall be capable of carrying the required load. Engine-driven pumps, when used, shall be on separate engines. The installation shall be such that failure of one source of energy or breakage of one line will not interfere with proper functioning of the instruments by means of the other source.

04.581—Safety Equipment Installation.

04.5810—*Safety Belts.*—Safety belts shall be so attached that no part of the attachment will fail at a load lower than that specified in CAR 04.2640.

04.5811—*Fire Extinguishers.*—The portable fire extinguisher specified in CAR 04.510 shall be so installed as to be accessible to the passengers. The two portable fire extinguishers specified in CAR 04.530 shall be so installed that one is readily available to the crew and the other is near the main external cabin door where it shall be readily available to passengers and ground personnel.

04.5812—*Safety Belt Signal.*—The signal or sign specified in CAR 04.530 shall be suitable for indicating to the passengers, at appropriate times, that the seat belts should be fastened. It shall be located in a conspicuous place and so arranged that it can be conveniently operated from the seat of either pilot.

04.5813—*Landing Flares.*—Landing flares shall be releasable from the pilot's compartment. Structural provision shall be made for the recoil loads.

04.5814—*Deicers.*—Positive means shall be provided for the deflation of all wing boots.

04.582—Electrical Equipment Installation.

04.5820—*General.*—Electrical equipment shall be installed in accordance with accepted practice and suitably protected from fuel, oil, water and other detrimental substances. Adequate clearance shall be provided between wiring carrying appreciable current and fuel and oil tanks, fuel and oil lines, carburetors, exhaust piping and moving parts.

04.5821—*Battery.*—Batteries shall be easily accessible and adequately isolated from fuel, oil and ignition systems. Adjacent parts of the aircraft structure shall be protected with a suitable acid-proof paint if the battery contains acid or other corrosive substance and is not completely enclosed. If the battery is completely enclosed, suitable ventilation shall be provided. All batteries shall be so installed that spilled liquid will be suitably drained or absorbed without coming in contact with the airplane structure.

04.5822—*Fuses.*— Fuses shall be so located that they can readily be replaced in flight. They shall break the current in a generating system at a sufficiently small current flow to adequately protect the lights, radio equipment and other parts of the circuit.

04.5823—*Generator.*—When a generator is specified it shall have sufficient capacity to carry the entire running load. Such generator shall be engine-driven unless an approved equivalent system is provided. Auxiliary power units will be approved in lieu of batteries and engine-driven generators, provided that they are at least two in number and that the supply system is capable of carrying the entire running load with any one unit out of action.

04.58230—Running Load.—The running load shall be defined as the electric consumption of all lights, radio equipment and other electrical devices except those which are designed only for occasional intermittent use. Examples of devices regarded as intermittent are radio broadcasting equipment, landing lights and electrically operated landing gears and wing flaps. Radio beacon signal receivers and all other lights are considered a part of the constant load.

04.5824—*Anchor Lights.*—The anchor light specified for seaplanes and amphibians shall be so mounted and installed that, when the airplane is moored or drifting on the water, it can show a white light visible for at least two miles in all directions.

04.5825—*Landing Lights.*—Electric landing lights shall be so installed that at least one shall be not less than 10 feet to the right or left of the first pilot's seat and beyond the swept disk of the outermost propeller. Individual switches for each light shall be provided in the pilot's compartment.

04.5826—*Instrument Lights.*—Instrument lights shall be so installed as to provide sufficient illumination to make all flight instruments easily readable and shall be equipped with rheostat control for dimming unless it can be shown that a non-dimming light is satisfactory.

04.5827—*Position Lights.*—Position lights shall be so installed as to provide the light intensity and ranges of visibility prescribed in CAR 15 for tail lights and for standard forward position lights, as the case may be. Forward position lights, including auxiliary lights, shall be spaced laterally as far apart as practicable.

04.5828—*Master Switch.*—Electrical installations shall incorporate a master switch easily accessible to a member of the crew.

04.583—Radio Equipment Installation.—(To be amplified.)

04.589—Miscellaneous Equipment Installation.

04.5890—*Seats.*—Seats or chairs, even though adjustable, in open or closed airplanes, shall be securely fastened in place whether or not the safety belt load is transmitted through the seat.

04.5891—*Accessories.*—Engine-driven accessories on multi-engine aircraft shall be distributed among two or more engines.

04.6—POWERPLANT INSTALLATION.

04.60—Engines.—Engines shall be of a type and design which has been certificated as airworthy in accordance with the requirements of CAR 13 or shall have been approved as airworthy in accordance with previous regulations, except that engines for use in light airplanes defined in CAR 04.01 need not be certificated or approved but shall have power ratings assigned by the Secretary in accordance with the provisions of CAR 13 or previous regulations.

04.61—Propellers.—Propellers shall be of a type and design which has been certificated as airworthy in accordance with the requirements of CAR 14 or shall have been approved as airworthy in accordance with previous regulations, except that wood propellers of a conventional type for use in light airplanes defined in CAR 04.01 need not be certificated. In certain cases maximum engine bore limitations are also assigned to propellers. Propellers may be used on any engine provided that the certified power ratings speed ratings, and bore of the engine are not in excess of the limitations of the propeller as certificated, and further provided that the vibration characteristics of the combination are satisfactory to the Secretary.

04.610—CONTROLLABLE PITCH.—The control mechanism shall be designed and equipped with a positive stop which shall limit the minimum pitch so that the take-off crankshaft speed for which the aircraft is certificated is not exceeded during take-off with take-off power unless it is necessary to so locate the stop that a higher crankshaft speed may be used in an emergency. The means provided for controlling the pitch shall be so arranged as to minimize the attention required from a pilot to prevent the engines from exceeding their crankshaft speed limitations under any flight condition.

04.611—PROPELLER CLEARANCE.—Propellers shall have a minimum ground clearance of 9 inches when the airplane is in a horizontal position with the landing gear deflected as it would be under the maximum authorized weight of the airplane. Propellers on seaplanes shall clear the water by at least 18 inches when the seaplane is at rest under the maximum authorized load condition. A clearance of at least 1 inch shall be provided between the tips of propellers and any part of the structure.

04.62—Fuel Systems.

04.620—CAPACITY AND FEED.—The fuel capacity shall be at least 0.15 gallons per maximum (except take-off) horsepower for which the airplane is certificated. Air-pressure fuel systems shall not be used. Only straight gravity feed or mechanical pumping of fuel is permitted. The system shall be so arranged that the entire fuel supply may be utilized in the steepest climb and at the best gliding angle and so that the feed ports will not be uncovered during normal maneuvers involving moderate rolling or side slipping. The system shall also feed fuel promptly after one tank has run dry and another tank is turned on. If a mechanical pump is used, an emergency hand pump of equal capacity shall be installed and available for immediate use in case of a pump failure during take-off. Hand pumps of suitable capacity may also be used for pumping fuel from an auxiliary tank to a main fuel tank.

04.621—TANK INSTALLATION.—No fuel tank shall be placed closer to an engine than the remote side of a fire-wall. At least one-half inch clear air space shall be allowed between the tank and fire-wall. Spaces adjacent to the surfaces of the tank shall be ventilated so that fumes cannot accumulate or reach the crew or passengers in case of leakage. If two or more tanks have their outlets interconnected they shall be considered as one tank and the air space in the tanks shall also be interconnected to prevent differences in pressure at the air vents of each tank of sufficient magnitude to cause fuel flow between tanks. Mechanical pump systems shall not feed from more than one tank at a time except by special ruling from the Secretary.

04.622—TANK CONSTRUCTION.—Each fuel tank shall be provided with either a sump and drain located at the point which is lowest when the airplane is in a normal position on the ground or outlets at the bottom of the tank provided with large mesh finger strainers. If a sump is provided, the main fuel supply shall not be drawn from the bottom of this sump. If no sump is provided the system drain shall be controllable from the pilot's compartment and shall act as a tank drain. Each tank shall be suitably vented from the top portion of the air space. Such air vents shall be so arranged as to minimize the possibility of stoppage by dirt or ice formation. When large fuel tanks are used, the size of the vent tubes should be proportioned so as to permit rapid changes in internal air pressure to occur and thereby prevent collapse of the tanks in a steep glide or dive. Tanks of 10 gallons or more capacity shall be provided with internal baffles unless suitable external support is provided to resist surging.

04.623—TANK STRENGTH.—Fuel tanks shall be capable of withstanding an internal test pressure of 3½ pounds per square inch without failure or leakage. Fuel tanks of large capacity which have a maximum fuel depth greater than 2 feet shall be investigated for the pressure developed during the maximum *limit* acceleration with full tanks. Tanks shall be so designed, and the rivets or welds so located, as to resist vibration failures or leakage.

04.624—GAUGE.—A satisfactory gauge shall be so installed on all airplanes as to readily indicate to a pilot or flight mechanic the quantity of fuel in each tank while in flight. When two or more tanks are closely interconnected and vented, and it is impossible to feed from each one separately, only one fuel-level gauge need be installed. If a glass gauge is used, it shall be suitably protected against breakage.

04.625—LINES AND FITTINGS.—All fuel lines and fittings shall be of sufficient size so that under the pressure of normal operation the flow is not less than double the normal flow required for take-off engine power. A test for proof of compliance with this requirement shall be made. All fuel lines shall be so supported as to prevent excessive vibration and should be located so no structural loads can be applied. Bends of small radius and vertical humps in the lines shall be avoided. Copper fuel lines which have been bent shall be annealed before installation. Parts of the fuel system attached to the engine and to the primary structure of the airplane shall be flexibly connected thereto. Flexible hose connections and fuel lines shall have metal liners or the equivalent. Fittings shall be of a type satisfactory to the Secretary.

04.626—STRAINERS.—One or more strainers of adequate size and design, incorporating a suitable sediment trap and drain, shall be provided in the fuel line between the tank and the carburetor and shall be installed in an accessible position. The screen shall be easily removed for cleaning.

04.627—VALVES.—One or more positive and quick-acting valves that will shut off all fuel to each engine shall be within easy reach of the first pilot and the second pilot or of the flight mechanic. In the case of airplanes employing more than one source of fuel supply, suitable provision shall be made for independent feeding from each source.

04.6270—*Dump Valves.*—When fuel tanks are equipped with dump valves, the operating mechanism for such valves shall be within convenient reach of the first pilot and the second pilot, or of the flight mechanic. Dump valves shall be so installed as to provide for safe and rapid discharge of fuel.

04.628—DRAINS.—One or more accessible drains shall be provided at the lowest point on the fuel systems to completely drain all parts of each system when the airplane is in its normal position on level ground. Such drains shall discharge clear of all parts of the airplane and shall be equipped with suitable safety locks to prevent accidental opening.

04.629—MISCELLANEOUS FUEL SYSTEM REQUIREMENTS.

04.6290—*Filler Openings.*—All filler openings in the fuel system shall be plainly marked with the capacity and the word "fuel". Provision shall be made to prevent any overflow from entering the wing or fuselage.

04.6291—An adequate means shall be provided for preventing the formation of ice in the engine carburetors. (See also 04.532 (j).)

04.63—Lubrication Systems.

04.630—GENERAL.—Each engine shall have an independent oil supply. The oil capacity of the system shall be at least 1 gallon for every 16 gallons of fuel for single-engine aircraft and 1 to 20 for multi-engine aircraft but shall not be less than the minimum specified by the engine manufacturer for safe operation of the engine. A special ruling concerning capacity will be made by the Secretary when oil may be transferred between engines in flight or when a suitable reserve is provided. The suitability of the lubrication system shall be demonstrated in flight tests in which engine temperature measurements are obtained. The system shall provide the engine with an ample quantity of oil at a temperature suitable for satisfactory engine operation.

04.631—TANK INSTALLATION.—Oil tanks shall be suitably vented and shall be provided with an expansion space which cannot be inadvertently filled with oil. Such expansion space shall be at least 10 per cent of the total tank volume, except that it shall in no case be less than one-half gallon.

04.632—TANK STRENGTH.—Oil tanks shall be capable of withstanding an internal test pressure of 5 pounds per square inch without failure or leakage. Tanks shall be so designed and the rivets or welds so located as to resist vibration failures and leakage.

04.633—GAUGE.—A suitable means shall be provided to determine the amount of oil in the system during the filling operation.

04.634—PIPING.—Oil piping shall have an inside diameter not less than the inside diameter of the engine inlet or outlet and shall have no splices between connections. Connections in the oil system shall be of a type satisfactory to the Secretary.

04.635—DRAINS.—One or more accessible drains shall be provided at the lowest point on the lubricating systems to drain completely all parts of each system when the airplane is in its normal position on level ground. Such drains shall discharge clear of all parts of the airplane and shall be equipped with suitable safety locks to prevent accidental opening.

04.636—OIL TEMPERATURE.—A suitable means shall be provided for measuring the oil temperature at the engine inlet.

04.637—FILLER OPENINGS.—All filler openings in the oil system shall be plainly marked with the capacity and the word "oil".

04.64—Cooling Systems.

04.640—GENERAL.—The cooling system shall be of sufficient capacity to maintain engine temperatures within safe operating limits under all conditions of flight during a period at least equal to that established by the fuel capacity of the aircraft, assuming normal engine power and speeds. Compliance with this requirement shall be demonstrated in flight tests in which engine temperature measurements are obtained under critical flight conditions including flight with one or more engines inoperative.

04.641—RADIATORS.—Radiators shall be so mounted as to reduce vibration and eliminate strains causing distortion.

04.642—PIPING.—Piping and connections shall conform to accepted standards and shall not transmit vibration to the radiator or the structure of the aircraft.

04.643—DRAINS.—One or more accessible drains shall be provided at the lowest points on the cooling system to drain completely all parts of such system when the airplane is in its normal position on level ground. Such drains shall discharge clear of all parts of the airplane and shall be equipped with suitable safety locks to prevent accidental opening.

04.644—FILLER OPENINGS.—All filler openings in the cooling system shall be plainly marked with the capacity of the system and the name of the proper cooling liquid.

04.65—Powerplant Instruments, Controls and Accessories.

04.650—INSTRUMENTS.—The engine instruments required are specified in CAR 04.5. The installation requirements for navigation instruments in CAR 04.5804 shall apply to tachometers and manifold pressure gauges. All other instruments shall be visible in flight to the pilot and co-pilot or to the flight mechanic. If the manifold pressure gauges and tachometers are not visible to the flight mechanic, he shall be provided with a duplicate set of these instruments.

04.651—CONTROLS.—All powerplant controls, including those of the fuel system, shall be plainly marked to show their function and method of operation.

04.6510—*Throttle Controls.*—Throttle controls shall be easily accessible to both pilots and shall be so arranged as to afford a positive and immediately responsive means of controlling all engines separately or simultaneously. Flexible throttle control systems shall be of a certificated type. A forward movement shall open the throttle.

04.6511—*Ignition Switches.*—Ignition switches shall be easily accessible to both pilots. A positive means for quickly shutting off all ignition of multi-engine aircraft, by grouping of switches or otherwise, shall be provided.

04.6512—*Propeller Pitch Controls.*—Separate pitch controls shall be provided for each propeller.

04.652—ACCESSORIES (AIRLINE CARRIERS).—(See CAR 04.5891.)

04.66—Manifolding, Cowling and Firewall.

04.660—GENERAL.—All manifolds, cowling and firewalls shall be so designed and installed as to reduce to a minimum the possibility of fire either during flight or following an accident and shall therefore comply with accepted practice in all details of installation not hereinafter specified.

04.661—MANIFOLDS.—Exhaust manifolds shall be constructed of suitable materials, shall provide for expansion, and shall be arranged and cooled so that local hot points do not form. Gases shall be discharged clear of the cowling, airplane structure and fuel system parts of drains. They shall not blow back on the carburetor air intake or the pilot or passengers, nor cause a glare ahead of the pilot at night. No exhaust manifolding shall be located immediately adjacent to or under the carburetor or fuel system parts liable to leakage.

04.662—AIR INTAKES.—Carburetor air intakes shall be suitably drained and shall open completely outside the cowling unless the emergence of back-fire flames is positively prevented. The drain shall not discharge fuel in the path of possible exhaust flames.

04.663—ENGINE COWLING.—All cowling around the powerplant and on the engine side of the firewall shall be made of metal and shall be so arranged that any accumulations of dirt, waste or fuel may be observed without complete removal of the cowling. It shall fit tightly to the firewall, but openings may be provided if the airplane surface within 15 inches thereof is protected with metal or other suitable fireproofing material. The cowling shall be completely and suitably drained in all attitudes of flight and on the ground, with separate drains provided for the parts of the fuel system liable to leakage. All such drains shall be so located as to prevent fuel or oil from dripping onto the exhaust manifold or any parts of the aircraft and from permeating any material of a cellular nature.

04.664—FIREWALL.—A firewall shall be provided unless the engine is mounted in an isolated nacelle with no fuel tanks. Such fire bulkhead shall be constructed in either of the following approved manners:

(*a*) A single sheet of terne-plate not less than 0.028″ thick.

(*b*) A single sheet of stainless steel not less than 0.015″ thick.

(*c*) Two sheets of aluminum or aluminum alloy not less than 0.02″ thick fastened together and having between them an asbestos paper or asbestos fabric sheet at least ⅛″ thick.

04.6640—The firewall shall completely isolate the engine compartment and shall have all necessary openings fitted with close-fitting grommets or bushings. Adjacent inflammable structural members shall be protected by asbestos or an equivalent insulating material and provision shall be made for preventing fuel and oil from permeating it.

04.665—HEATING SYSTEMS.—Heating systems involving the passage of cabin air over or in close proximity to engine exhaust manifolds shall not be used unless adequate precautions are incorporated in the design to prevent the introduction of carbon monoxide into the cabin or pilot's compartment. They shall be constructed of suitable materials, be adequately cooled and be susceptible to ready disassembly for inspection.

04.67—(Unassigned).

04.68—(Unassigned).

04.69—Miscellaneous Powerplant Requirements.

04.690—MATERIALS.—Fuel, oil and cooling systems shall be made of materials which, including their normal or inherent impurities, will not react chemically with any fuels, oils or liquids that are likely to be placed in them.

04.7—PERFORMANCE.

04.70—Performance Requirements.—All airplanes shall comply with the following performance requirements, in standard atmosphere, at all weights up to and including the *standard* weight (CAR 04.102), and under all loading conditions within the center of gravity range certified (CAR 04.742). There shall be no flight characteristics which, in the opinion of the Secretary, render the airplane unairworthy.

04.700—LANDING SPEEDS.—The landing speed with power off, in standard calm air at sea level, shall not exceed a value determined as follows:

(*a*) Airplanes certificated for passenger carrying:

65 miles per hour for airplanes of 20,000 pounds *standard* weight or less,

70 miles per hour for airplanes of 30,000 pounds *standard* weight or more, and a linear variation with *standard* weight shall apply for airplanes between 20,000 and 30,000 pounds.

(*b*) Airplanes which are certificated for the carriage of goods only:

The above landing speed values may be increased 5 miles per hour.

04.701—TAKE-OFF.

04.7010—Landplanes shall take-off within 1,000 feet in standard calm air at sea level.

04.7011—Seaplanes shall take-off from the water at sea level in 45 seconds or less with a wind velocity not exceeding 10 miles per hour and under moderately smooth water conditions.

04.702—CLIMB.

04.7020—Landplanes shall climb, in feet the first minute after leaving the ground, at least 8 times the calculated stalling speed in miles per hour, but not less than 300 feet.

04.7021—Seaplanes shall climb, in feet the first minute after leaving the water, at least 6 times the calculated stalling speed in miles per hour, but not less than 250 feet.

04.703—CONTROLLABILITY AND MANEUVERABILITY.—All airplanes shall be controllable and maneuverable under all power conditions and at all flying speeds between minimum flying speed and the maximum certified speed. All airplanes shall have adequate control in a landing at minimum landing speed with power off. Airplanes equipped with conventional gear shall comply with the foregoing requirement in a three-point landing.

04.704—BALANCE.—As used in these regulations the term "balanced" refers to steady flight in calm air without exertion of control force by the pilot or automatic pilot. Lateral and directional balance is required at cruising speed, which for this purpose shall be taken as 90 per cent of the high speed in level flight. Longitudinal balance is required under the following flight conditions:

(*a*) Power on: In level flight, at all speeds between cruising speed and a speed 20 per cent in excess of stalling speed. In a climb, at maximum (except take-off) horsepower and a speed 20 per cent in excess of stalling speed.

(*b*) Power off: In a glide, at a speed not in excess of 140 per cent of the maximum permissible landing speed or the placard speed with flaps extended, whichever is lower, under the forward center of gravity position approved with maximum authorized load and under the most forward center of gravity position approved, regardless of weight.

04.705—STABILITY.—Under all power conditions all airplanes shall be longitudinally, laterally and directionally stable. An airplane will be considered to be longitudinally stable if, in stability tests, the amplitude of the oscillations decreases.

04.706—SPINNING.—All airplanes shall be able to recover from a 6-turn spin in no more than 1½ additional turns with controls neutral, with power off and with the stabilizer or other trimming device set for balance at cruising speed in level flight with the particular load. During the spin the control surfaces shall exert no back pressure on the control column.

04.7060—*Abnormal Spins.*—When a spin is obtained by movements of the controls which the inspector considers to be abnormal and unjustifiably severe for operating maneuvers, the use of elevator and rudder will be permitted for recovery after 6 turns. An airplane of this type will be acceptable insofar as spin characteristics are concerned provided recovery can be made in not more than 2 additional turns with ailerons in neutral, and further provided that a normal spin either conforms with the normal requirements or is impossible to perform.

04.7061—An airplane of more than 4,000 pounds *standard* weight will not be subjected to the spin test unless the flight characteristics of the particular airplane are, in the opinion of the Secretary, such as to indicate the advisability of a spin test.

04.707—FLUTTER AND VIBRATION.—Wings, tail surfaces, control surfaces and primary structural parts shall be free from flutter or objectionable vibration in all normal attitudes or conditions of flight at all speeds between the minimum flying speed and the maximum certified speed.

04.708—GROUND AND WATER CHARACTERISTICS.—Landplanes shall be maneuverable on the ground and shall be free from dangerous ground looping tendencies and objectionable taxiing characteristics. The seaworthiness and handling characteristics of seaplanes and amphibians shall be demonstrated by tests deemed appropriate by the Secretary. (See CAR 04.452 for water stability requirements.)

04.71—Modified Performance Requirements for Airline Carriers.—For multi-engine airline aircraft operating in accordance with the requirements of CAR 61 the weight may be increased beyond the values corresponding to the landing speed specified in CAR 04.700 and the take-off requirements of CAR 04.701, subject to the following conditions.

04.710—The increased weight shall be known as the *provisional* weight. (CAR 04.103.) The *standard* weight (CAR 04.102) shall be the maximum permissible weight for all operations other than those in accordance with the requirements of CAR 61. The *provisional* weight shall be the maximum permissible weight for any operation.

20078°—37——4

04.711—Compliance with all the airworthiness requirements except landing speed and take-off is required at the *provisional* weight, except that the *provisional* weight may exceed the *design* weight on which the structural loads for the landing conditions are based by an amount not greater than 15 per cent, provided that the airplane is shown to be capable of safely withstanding the ground or water shock loads incident to taking-off at the *provisional* weight.

04.712—The aircraft shall be provided with suitable means for the rapid and safe discharge of a quantity of fuel sufficient to reduce its weight from the *provisional* weight to the *standard* weight.

04.713—In no case shall the *provisional* weight exceed a value corresponding to a landing speed of 5 miles per hour in excess of that specified in CAR 04.700.

04.714—Aircraft engaged in operations in accordance with the requirements of CAR 61 shall be certificated for the weight at which they comply with the take-off and other performance provisions of those regulations for the particular operation involved provided that such certified weight shall not exceed the *provisional* weight. It may, however, be less than the *provisional* or *standard* weights, dependent upon the ground or water facilities and the nature of the route flown.

04.72—Performance Tests.

04.720—GENERAL.—Compliance with the foregoing performance requirements shall be demonstrated by means of suitable tests of the type airplane. Additional tests for airline carriers are specified in CAR 04.73. Computations are not acceptable as proof of compliance with the requirements, but shall be used for correcting flight test data to standard atmospheric conditions and may be used to estimate the effects of minor changes. The methods of performance calculation and correction employed shall be subject to the approval of the Secretary.

04.7200—The applicant shall provide a person holding an appropriate commercial pilot certificate to make the flight tests, but a designated Bureau inspector may pilot the airplane during such parts of the tests as he may deem advisable.

04.7201—In the event that the applicant's test pilot is unable or unwilling to conduct any of the required flight tests, the tests shall be discontinued until the applicant furnishes a competent pilot.

04.7202—Parachutes shall be worn by members of the crew during the flight tests.

04.7203—The applicant shall submit to the Bureau inspector a report covering all computations and tests required in connection with calibration of flight instruments and correction of test results to standard atmospheric conditions. The inspector will conduct any flight tests which appear to him to be necessary in order to check the calibration and correction report or to determine the airworthiness of the airplane.

04.721—LOADING CONDITIONS.—The loading conditions used in performance tests shall be such as to cover the range of loads and center of gravity positions for which the airplane is to be certificated.

04.7210—*Use of Ballast.*—Ballast may be used to enable airplanes to comply with the flight test requirements as to longitudinal stability, balance and landing in accordance with the following provisions:

04.72100—(*a*) Ballast shall not be used for this purpose in airplanes having a gross weight of less than 5,000 pounds nor in airplanes with a total seating capacity of less than 7 persons.

04.72101—(*b*) The place or places for carrying ballast shall be properly designed and installed and plainly marked.

04.72102—(*c*) The loading schedule which will accompany each certificate issued for an airplane requiring special loading of this type shall be conspicuously posted in either the pilot's compartment or in or adjacent to the ballast compartments and strict compliance therewith will be required of the airplane operator.

04.7211—*Fuel to be carried.*—When low fuel adversely affects balance or stability, the airplane shall be so tested as to simulate the condition existing when the amount of fuel on board does not exceed one gallon for every 12 maximum (except take-off) horsepower of the engine or engines installed thereon. When the engine is limited to a lower power, the latter shall be used in computing low fuel.

04.722—MAXIMUM AIRSPEED.—The flight tests shall include steady flight at the maximum certified airspeed. Such tests shall in no case involve indicated airspeeds in excess of 90 per cent of the design gliding speed (V_g) for which compliance with the structural loading requirements (CAR 04.21) has been proved. When V_g is greater than 1.33 V_L (CAR 04.111) the flight tests need not be conducted beyond an indicated airspeed equal to 1.2 V_L, provided that the operation limits are correspondingly fixed (see CAR 04.743). The maximum indicated airspeed to be certified for operation of high-lift devices shall also be suitably demonstrated in flight. Recovery from glides or dives at the maximum certified airspeed shall be made in a gentle manner.

04.723—EMERGENCY CEILING (MULTI-ENGINE AIRPLANES ONLY).—Multi-engine airplanes, except airline carriers as provided for in CAR 04.73, shall be flight tested to determine the altitude at which level rectilinear flight may be maintained with any one engine inoperative, the remaining engine or engines operating at the maximum (except take-off) power. In this test the *standard* weight shall be carried.

04.724—AIRSPEED INDICATOR CALIBRATION.—In accordance with CAR 04.5800, the airspeed indicator of the type airplane shall be calibrated in flight. The method of calibration used shall be subject to the approval of the Secretary.

04.725—CHECK OF FUEL SYSTEM.—The operation of the fuel system shall be checked in flight to determine its effectiveness under low fuel conditions and after changing from one supply tank to another. (See CAR 04.620.) For such tests low fuel is defined as approximately 15 minutes supply at the maximum (except take-off) power certified.

04.73—Additional Performance Tests for Airline Carriers.—The performance characteristics of airplanes certificated as airline carriers shall be determined in accordance with the following requirements, which are additional to those specified under CAR 04.72. From the results obtained in the following tests, the applicant shall submit complete computations and tabulated or charted data which shall show the take-off and landing characteristics (including angles of climb and glide) for various load conditions up to a standard altitude of 8,000 feet, and, with one engine shut off or throttled, rates of descent as related to airspeed between the usable ceiling (see CAR 04.732 (*a*)) and an altitude of 4,000 feet higher.

04.730—TAKE-OFF.—With all engines functioning normally the following characteristics shall be obtained in relatively calm air (wind velocity not to exceed approximately 5 miles per hour) at each of two altitudes differing by at least 3,000 feet:

(*a*) The best angle [1] of steady climb and the corresponding flight path speed with light load [2] and at the maximum authorized weight, with the engines operating at authorized maximum (except take-off) power, and with the landing gear, if retractable, fully retracted.

[1] Best angle of climb is defined as the angle corresponding to the maximum attainable ratio of vertical speed to flight path speed.

[2] Wherever light load is referred to in this section it shall be interpreted as representing the lightest weight at which the aircraft can safely be flown, i. e., the empty aircraft plus crew. ballast if necessary, and the amount of fuel and oil necessary for the tests.

(*b*) The horizontal distances required for acceleration from a standing start to the speeds determined under the foregoing sub-paragraph (*a*) with light load and at the maximum authorized weight, with the landing gear in the extended position.

(*c*) The horizontal distance required for acceleration from a standing start to the speeds determined under item (*a*) of CAR 04.731 with light load and at maximum authorized weight, with the landing gear in the extended position.

04.731—CLIMB.—The following characteristics shall be determined at each of two altitudes differing by at least 3,000 feet with the ignition switch of one engine shut off and the remaining engine or engines operating at the authorized take-off power and with the landing gear fully extended, the propeller of the shut-off engine being set for take-off:

(*a*) The speed of best angle of steady climb with one engine shut off with light load and at the maximum authorized weight.

(*b*) The best angle of steady climb with conditions as in (*a*) above.

04.732—FLIGHT WITH INOPERATIVE ENGINE.—The following characteristics shall be determined with the ignition switch of one engine shut off or with one engine throttled, whichever results in a lower ceiling, and with the remaining engine or engines operating at the maximum (except take-off) power.

(*a*) The usable ceiling which, for this purpose, shall be defined as the altitude at which the best rate of climb is 50 feet per minute, with light load and at the maximum authorized weight.

(*b*) The speed in level flight, at the usable ceiling at maximum authorized weight.

(*c*) Rates of descent as related to airspeed, from an altitude 4,000 feet above the usable ceiling determined in (*a*) above, with light load and at maximum authorized weight.

04.733—APPROACH AND LANDING.—The following characteristics shall be determined in relatively calm air (wind velocity not to exceed approximately 5 miles per hour) at each of two altitudes differing by at least 3,000 feet. The engines shall be fully throttled, the propellers (if controllable) in low pitch, and the wing flaps or similar devices used to the maximum extent.

(*a*) The normal gliding angle for landing approach at maximum authorized weight at a speed at least 10 miles per hour above the minimum landing speed. (The airspeed at which this is made shall be noted.)

(*b*) The length of ground run required to come to a full stop after landing from the test for condition (*a*) above, using brakes.

04.734—PROVING TESTS.—See CAR 40 for special tests required for airline carriers which are to be certificated for passenger carrying.

04.74—Operation Limitations.

04.740—WEIGHT.—Airplanes may be certificated at a maximum authorized weight which is not sufficient to permit carrying simultaneously the full fuel and full pay load, provided that such weight shall be sufficient to provide a gasoline load of at least 0.15 gallon per certified maximum (except take-off) horsepower, with all seats occupied and with sufficient oil for this amount of fuel.

04.741—PROVISIONAL WEIGHT (AIRLINE CARRIERS).—(See CAR 04.71.)

04.742—CENTER OF GRAVITY LIMITATIONS.—The maximum variation in the location of the center of gravity for which the airplane is certificated to be air worthy shall be established. Means shall be provided, when necessary in the opinion of the Secretary, by which the operator is suitably informed of the permissible loading conditions which result in a center of gravity within the certified range.

04.743—AIR SPEED LIMITATIONS.—The maximum certified airspeed shall be limited to a value at least 10 per cent less than the maximum indicated airspeed attained in official flight tests. (See CAR 04.722.) The effects of auxiliary devices shall be similarly accounted for when their operation lowers the safe operating speeds. Means shall be provided by which the pilot is suitably informed of the necessary speed limitations.

04.7430—When the design power (CAR 04.105) used in determining structural loading conditions is less than the maximum (except take-off) power for which the engine is certified, the cruising speed shall be limited to a value at least 10 per cent less than the V_L (CAR 04.111) corresponding to the design power used.

04.744—POWERPLANT LIMITATIONS.—The operations for which engines and propellers are certificated shall be limited to conform with the requirements of CAR 04.260 and to prevent damage to the engines during take-off or flight. Means shall be provided to effect such limitations or to inform the operating personnel thereof.

04.8—(UNASSIGNED).

04.9—MISCELLANEOUS REQUIREMENTS.

04.90—Standard Weights.—In computing weights the following standard values shall be used:

Gasoline	6 lbs. per gallon.
Lubricating Oil	7.5 lbs. per gallon.
Crew and Passengers	170 lbs. per person.
Parachutes	20 lbs. each.

04.91—Leveling Means.—Adequate means shall be provided for easily determining when the aircraft is in a level position.

TABLE 04-1

Symmetrical Flight Conditions (Flaps Retracted)

1. Condition	I	II	III	IV	V	VI
2. Reference CAR 04	.2131	.2132	.2133	.2134	.2135	.2136
3. Design Speed (See CAR 04.211)	V_L	V_L	V_g	V_g	V_L	V_g
4. Gust Velocity, U, *fps* [1] [2]	+30	−30	+15	−15	----------	----------
5. Δn (a) Gust [3]	CAR 04.2121	CAR 04.2121	CAR 04.2121	CAR 04.2121	$-0.5\Delta n_{Ia}$	----------
5. Δn (b) Maneuvering	Fig. 04-3	----------	$0.6\Delta n_{Ib}$	$-\Delta n_{IIIa}$	$-0.25\Delta n_{Ib}$	----------
6. *Limit* Load Factor, n, When line 5 gives two values of Δn, use larger	$1+\Delta n_I$	$1+\Delta n_{II}$	$1+\Delta n_{III}$	$1+\Delta n_{IV}$	$-1+\Delta n_V$	----------
7. Minimum value of n	2.50	None	2.00	None	1.5	None
8. Minimum Yield Factor of Safety, j_y	1.0	1.0	1.0	1.0	1.0	1.0
9. Minimum Ultimate Factor of Safety, j_u	1.5	1.5	1.5	1.5	1.5	1.5

[1] Feet per second.
[2] + means upward, − means downward.
[3] May be limited by maximum dynamic lift coefficient obtainable under sudden changes of angle of attack.

TABLE 04-2

Symmetrical Flight Conditions (Flaps Extended)

1. Condition	VII	VIII	IX
2. Reference CAR 04	.2141	.2142	.2143
3. Design Speed (See CAR 04.211)	V_f	V_f	V_f
4. Gust Velocity, U, *fps* [1] [2]	+15	−15	-------
5. Δn [3]	CAR 04.2121	CAR 04.2121	-------
6. *Limit* Load Factor, n	$1+\Delta n_{VII}$	$1+\Delta n_{VIII}$	-------
7. Minimum value of n	2.00	None	None
8. Minimum Yield Factor of Safety, j_y	1.0	1.0	1.0
9. Minimum Ultimate Factor of Safety, j_u	1.5	1.5	1.5

[1] Feet per second.
[2] + means upward, − means downward.
[3] May be limited by maximum dynamic lift coefficient obtainable under sudden changes of angle of attack.

TABLE 04-3

Loading Conditions for Horizontal Tail Surfaces

1. Condition	Balancing	Maneuvering	Damping	Tab Effects
2. CAR Reference 04	.2210	.2211	.2212	.2213
3. Design Speed (See CAR 04.211)	----------	V_p	----------	V_L
4. Force Coefficient, C_n	----------	{−.55 (down) +.35 (up)}	----------	----------
5. Average *Limit* Pressure, p. s. f. [1]	----------	$C_n q_p$ [2]	----------	----------
6. Chord Distribution	Fig. 04-4	Fig. 04-5	Fig. 04-6	Fig. 04-5 [3]
7. Span Distribution	Constant C_n	Constant C_n	Constant C_n	Constant C_n [3]
8. Minimum Average *Limit* Pressure, p. s. f. [1]	----------	15	----------	----------
9. Special Requirements	None	None	None	None
10. Minimum Yield Factor of Safety, j_y	1.0	1.0	1.0	1.0
11. Minimum Ultimate Factor of Safety, j_u	1.5	1.5	1.5	1.5

[1] Over entire horizontal tail.
[2] q_p is the dynamic pressure corresponding to V_p, see CAR 04.118.
[3] Refers to main surface, disregarding tab; uniform pressure distribution may be assumed over tab.

TABLE 04–4

Loading Conditions for Vertical Tail Surfaces

1. Condition	Maneuvering	Damping	Gust	Tab Effects
2. CAR Reference 04	.2220	.2221	.2222	.2223
3. Design Speed (See CAR 04.211)	V_p [3]		V_L	V_L [4]
4. C_n or Gust	C_n=0.45		U=30 *fps*	
5. Average *Limit* Pressure, p. s. f. [1]	$C_n q_p$ [2]		04.2222(*a*)	
6. Chord Distribution	Fig. 04–5	Fig. 04–6	Fig. 04–6 [5]	Fig. 04–5 [6]
7. Span Distribution	Constant C_n	Constant C_n	Constant C_n	Constant C_n [6]
8. Minimum Average *Limit* Pressure, p. s. f. [1]	12			
9. Special Requirements	04.2220 (*b*)	None	None	None
10. Minimum Yield Factor of Safety, j_y	1.0	1.0	1.0	1.0
11. Minimum Ultimate Factor of Safety, j_u	1.5	1.5	1.5	1.5

[1] Over entire vertical tail.
[2] q_p is the dynamic pressure corresponding to V_p, see CAR 04.118.
[3] See 04.2220 (*a*) for exception.
[4] See 04.2223 (*a*) for exception.
[5] See 04.2222 (*c*).
[6] Refers to main surface, disregarding tab; uniform pressure distribution may be assumed over tab.

TABLE 04–5

Loading Conditions for Ailerons

1. Condition	Maneuvering	Tab Effects
2. CAR Reference 04	.2230	.2231
3. Design Speed (See CAR 04.211)	V_p [1]	V'_L [3]
4. C_n or Gust	C_n=0.45	
5. Average *Limit* Pressure, *p. s. f.*	C_{nq_p} [2]	
6. Chord Distribution	Fig. 04–7	Fig. 04–7 [4]
7. Span Distribution	Constant C_n	Constant C_n [4]
8. Minimum Average *Limit* Pressure, *p. s. f.*	12	
9. Special Requirements	04.2230(*b*)	None
10. Minimum Yield Factor of Safety, j_y	1.0	1.0
11. Minimum Ultimate Factor of Safety, j_u	1.5	1.5

[1] See 04.2230 (a) for exception.
[2] q_p is the dynamic pressure corresponding to V_p, see CAR 04.118.
[3] V'_L is the maximum level flight air speed with any engine inoperative.
[4] Refers to main surface, disregarding tab; uniform pressure distribution may be assumed over tab.

TABLE 04–6

Loading Conditions for Control Systems

(See CAR 04.230)

	Elevator	Rudder		Aileron	Flaps tabs etc.
		Symmetrical Thrust[1]	Unsymmetrical Thrust[2]		
1. CAR Reference 04	.231	.232	.232	.233	.234
2. Maximum *Limit* Control Force, pounds	200	200	200	80	None
3. Minimum *Limit* Control Force, pounds	Fig. 04–8	130	200	Fig. 04–9	See Ref.
4. Minimum Yield Factor of Safety, j_v	1.0	1.0	1.0	1.0	1.0
5. Minimum Ultimate Factor of Safety, j_u	1.5	1.5	1.5	1.5	1.5

(1) Propeller axes all in plane of symmetry.
(2) Propeller axes not all in plane of symmetry.

TABLE 04–7

Additional (Multiplying) Factors of Safety

(See CAR 04.27)

Item	Component	CAR Reference 04	Additional Yield Factor of Safety, j_v	Additional Ultimate Factor of Safety, j_u	May be Covered by Item No.
1.	Fittings	.271	None	1.20	2,4,5,6,7,8,9
2.	Castings	.272	None	2.00	7,8
3.	Parallel double wires in wing lift truss	.273	None	1.05	4
4.	Wires at small angles	.274	None	See Ref.	
5.	Double drag truss wires	.275	None	See Ref.	
6.	Torque tubes used as hinges	.276	None	1.5	
7.	Control surface hinges [1]	.277	None	6.67	
8.	Control system joints [1]	.277	None	3.33	
9.	Wire sizes	.278	None	See Ref.	

(1) For bearing stresses only.

Any and all rules or regulations made, established, and issued by the Secretary of Commerce pursuant to law as are inconsistent with the provisions of the above specified civil air regulations are hereby repealed.

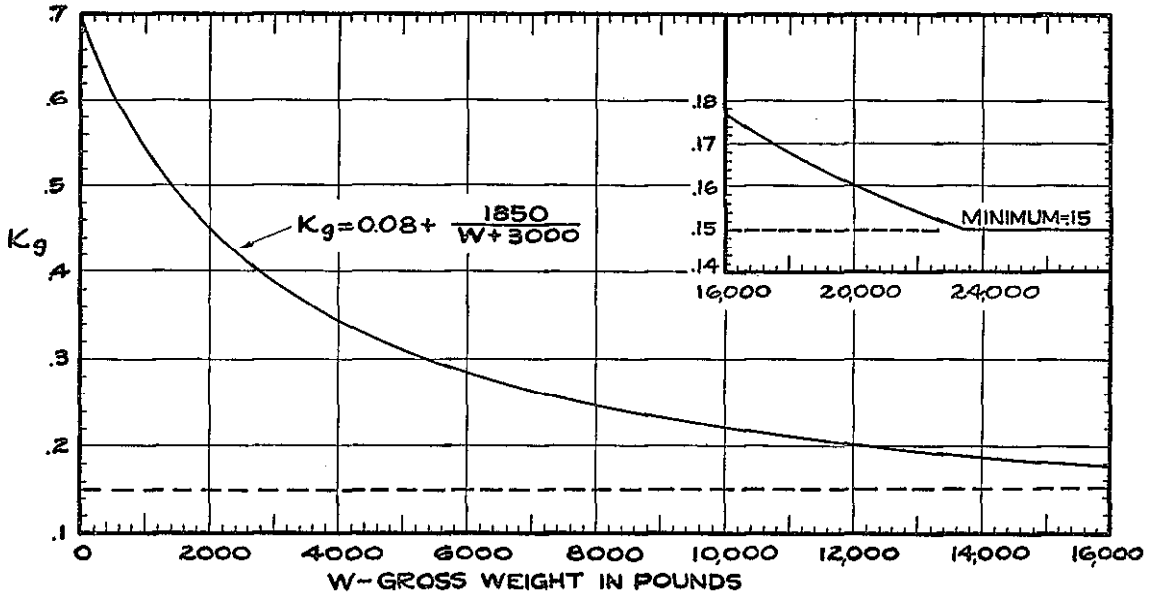

FIG. 04-1 GLIDING SPEED FACTOR

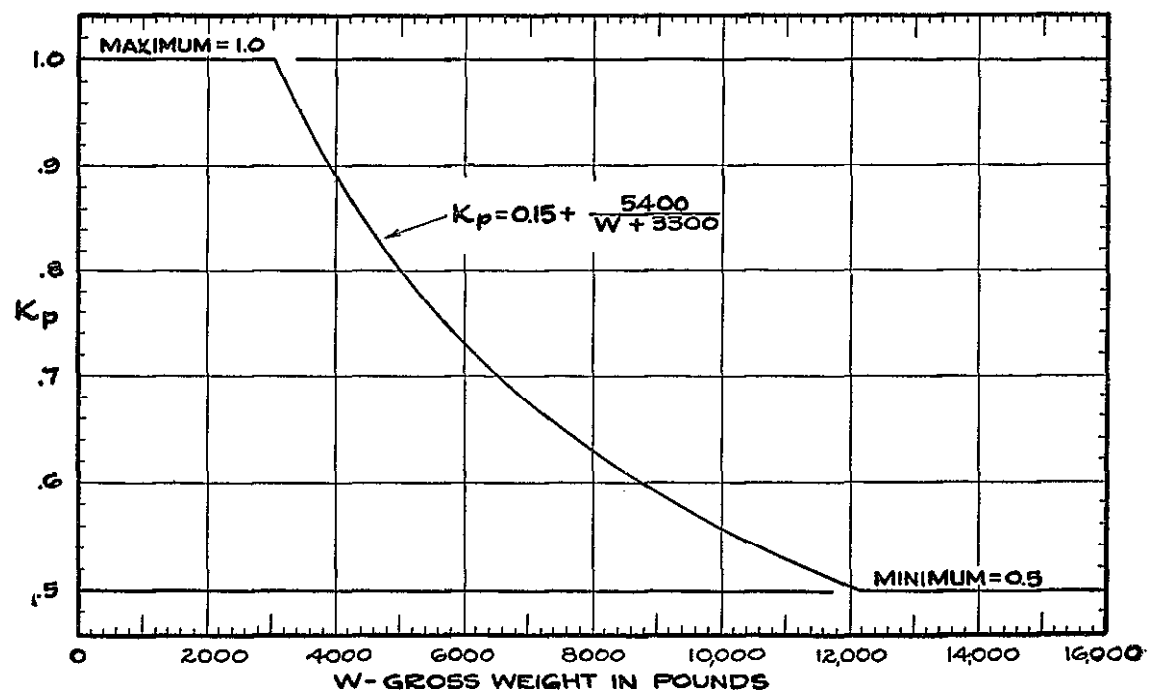

FIG. 04-2 PULL-UP SPEED FACTOR

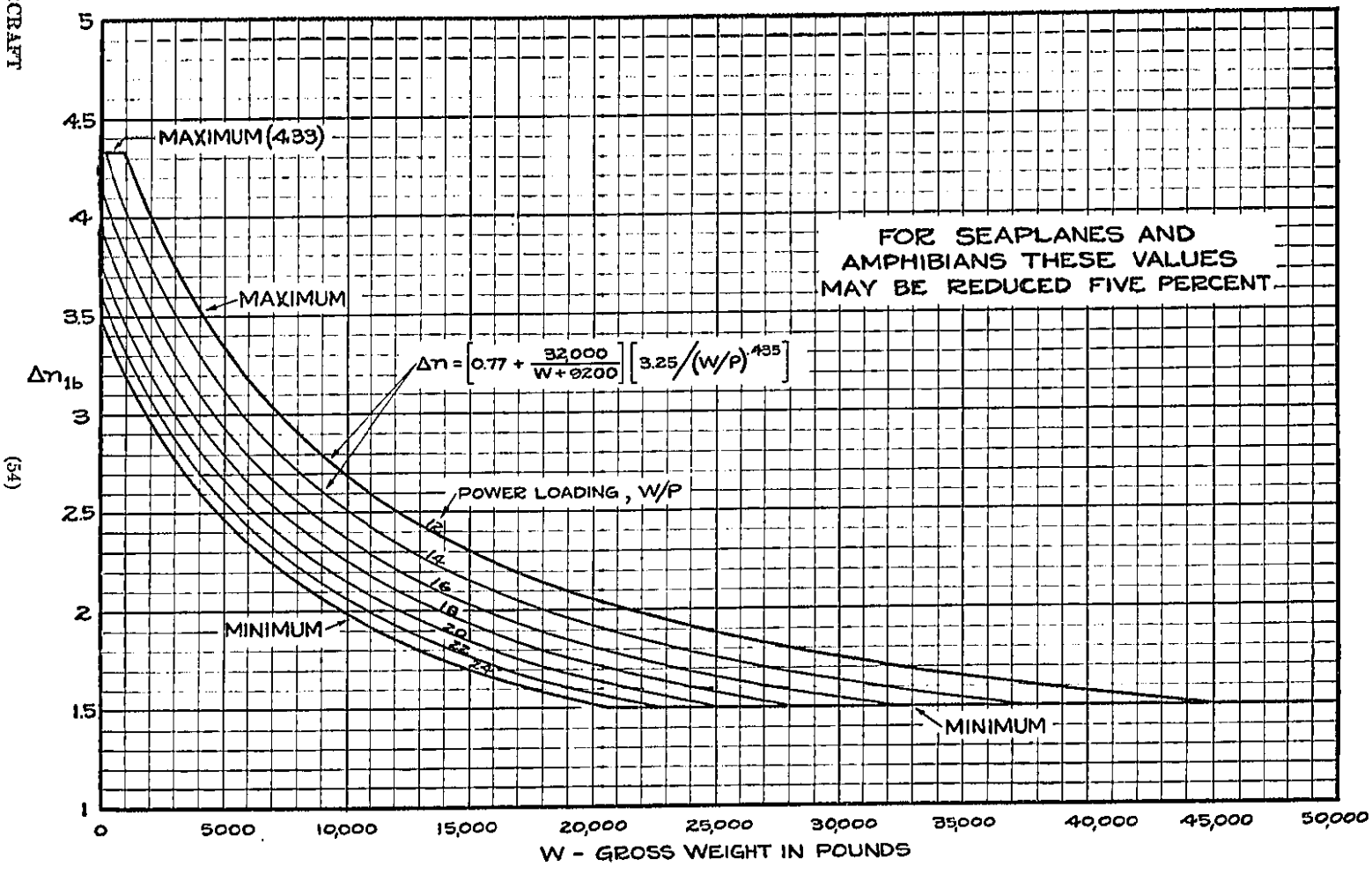

FIG. 04-3 MANEUVERING LOAD FACTOR INCREMENT, CONDITION I

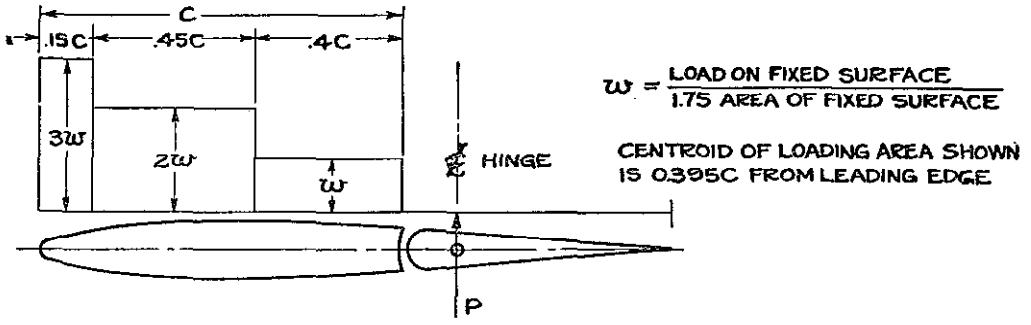

FIG. 04-4 "BALANCING" DISTRIBUTION - HORIZONTAL TAIL

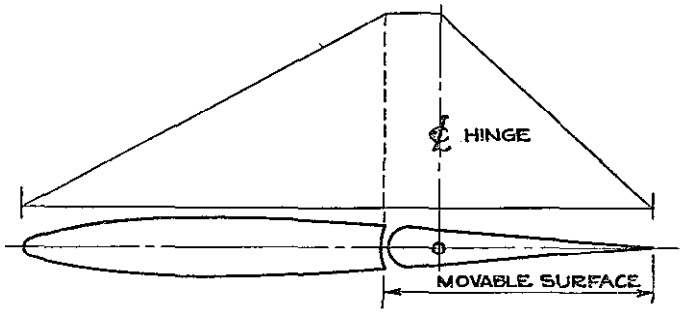

FIG. 04-5 "MANEUVERING" TAIL LOAD DISTRIBUTION

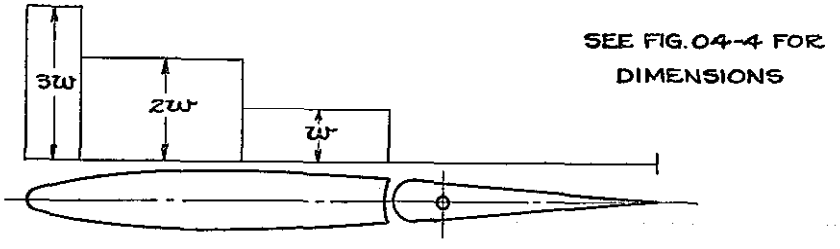

FIG. 04-6 "DAMPING" TAIL LOAD DISTRIBUTION

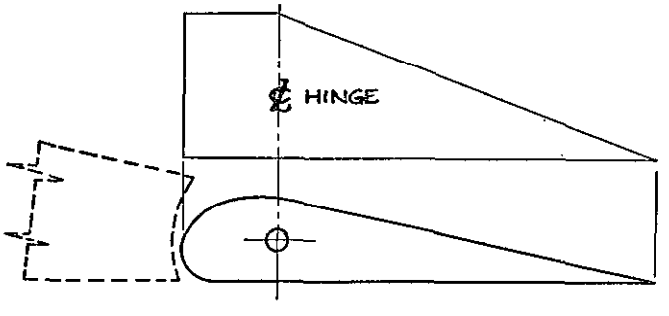

FIG. 04-7 AILERON LOAD DISTRIBUTION

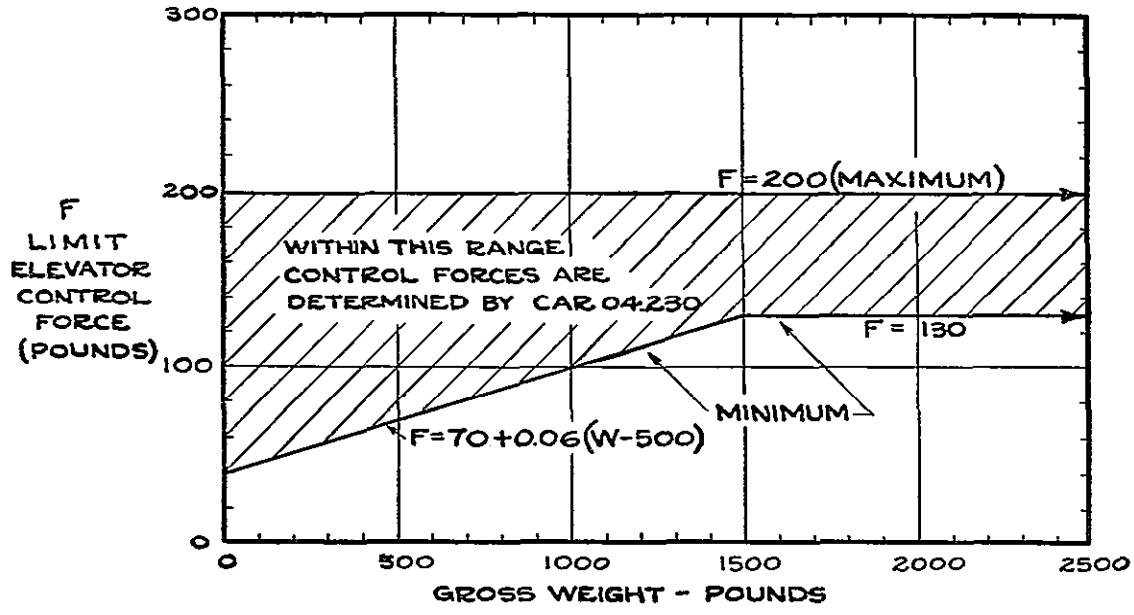

FIG. 04-8 ELEVATOR CONTROL FORCE LIMITS

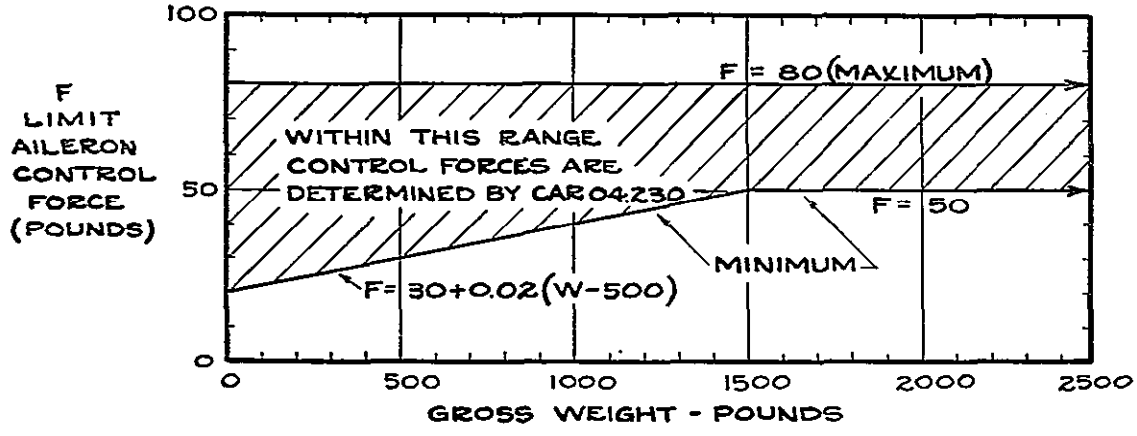

FIG. 04-9 AILERON CONTROL FORCE LIMITS

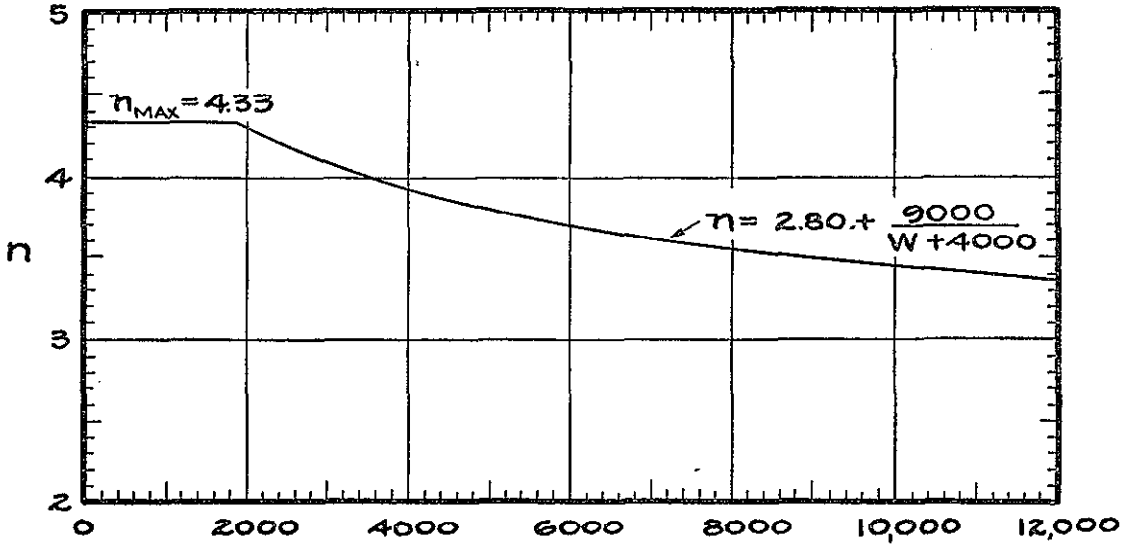

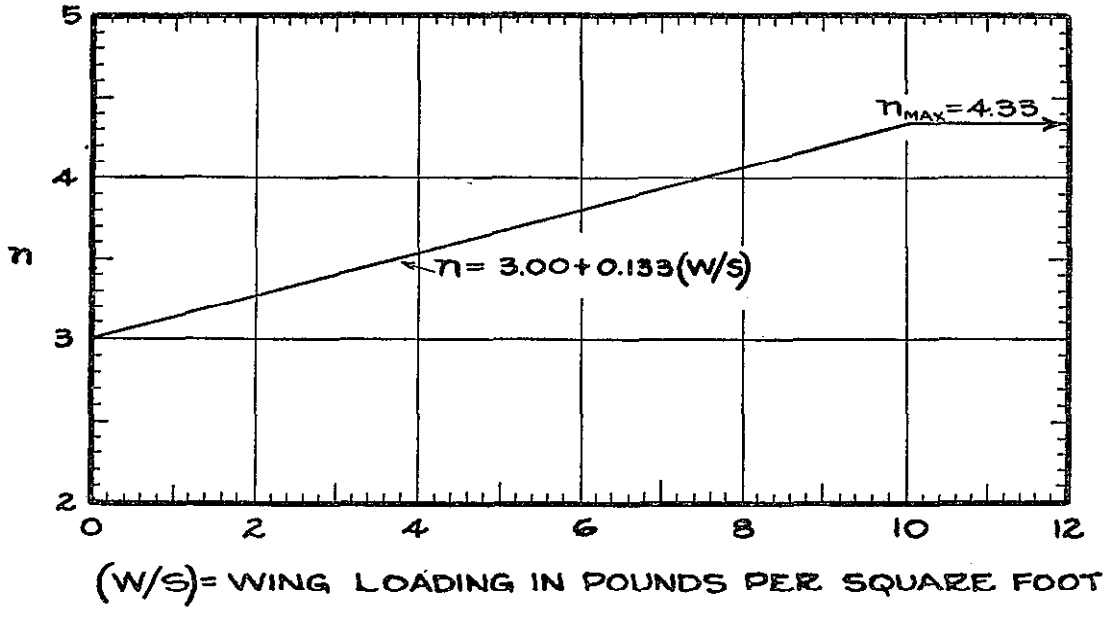

NOTE: USE THE CHART INDICATING THE LOWER VALUE

FIG. 04-10 LIMIT LOAD FACTORS FOR LEVEL AND 3-POINT LANDING CONDITIONS