26.60

Civil Aeronautics Manual 18

Maintenance, Repair, and Alteration, Of Airframes, Powerplants Propellers, and Appliances

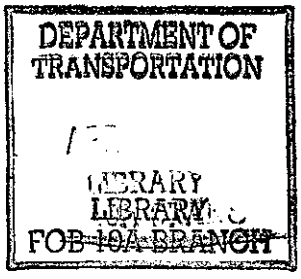

FEDERAL AVIATION AGENCY

December 15, 1959

IMPORTANT NOTICE

This is a consolidation of Volume III of the Civil Aeronautics Manuals (CAM's 18 and 24). It brings together all Volume III material previously published, including Supplements 1 through 8. It contains no new material. Subsequent changes begin with Supplement 9.

Return to: 75-47

FEDERAL AVIATION AGENCY
Washington, D.C.

Civil Aeronautics Manuals–Volume III

Notice to FAA Holders of Volume III of the CAM's **December 15, 1959**

SUBJECT: New Issuance System for Volume III Manuals.

The FAA has recently inaugurated an individual issuance system for the Civil Aeronautics Manuals. They will no longer be grouped in volumes. Each manual will be issued separately and will contain both the pertinent Civil Air Regulation and any related CAM material.

Civil Aeronautics Manual 18 (dated February 1957) as included in Volume III, and amended by supplements 1, 2, 4, 6, 7, 8, and 9 to Volume III, is up to date except for editorial corrections to change CAA to FAA.

In view of this fact, CAM 18 will not be reprinted at this time. However, to facilitate the breaking down of the volume issuance system of the CAM's, we are providing a new FAA cover to replace the CAA cover dated February 1957. This new cover is dated December 15, 1959, and the next change to this manual will be issued as Supplement No. 1 to CAM 18. Also, references to CAA will be changed to FAA, where appropriate, as page revisions to CAM 18 are issued.

Civil Aeronautics Manual 24, which was formerly issued by the CAA as part of Volume III, is being revised and copies will be available concurrently with the issuance of this notice. Therefore, CAM 24, dated January 1957, should be removed from Volume III and destroyed.

Remove the following pages:
- CAM 18
  - Cover dated February 1957
  - Introductory Note—page III
- CAM 24
  - Destroy CAM 24 dated January 1957

Insert the following new pages:
- CAM 18
  - Cover dated December 15, 1959
  - Introductory Note—page III

Above changes made by E. Moyer on 7/6/61

William B. Davis

WILLIAM B. DAVIS, *Director,*
Bureau of Flight Standards.

Attachments.

Please distribute to men! also please place one in my book case.

JEP

U.S. GOVERNMENT PRINTING OFFICE: 1960 O - 536788

Introductory Note

This manual contains in consolidated form (1) Civil Air Regulations Part 18, Maintenance, Repair, and Alteration of Airframes, Powerplants, Propellers, and Appliances, dated July 17, 1956, Amendments 18–1, 18–2, and Special Civil Air Regulation SR–377A; and (2) the rules, policies, and interpretations issued by the Administrator of the Federal Aviation Agency in application to the various sections of the regulations.

FAA *rules* are supplementary regulations issued pursuant to authority expressly conferred on the Administrator in the Civil Air Regulations. Such rules are mandatory and must be complied with.

FAA *policies* provide detailed technical information on recommended methods of complying with the Civil Air Regulations. Such policies are for the guidance of the public and are not mandatory in nature.

FAA *interpretations* define or explain words and phrases of the Civil Air Regulations. Such interpretations are for the guidance of the public and will be followed by the Agency in determining compliance with the regulations.

The manual is arranged to give the number, title, and text of each section of the regulations followed by any rules, policies, or interpretations applicable to that section. The rules, policies, or interpretations of the Administrator are identified by consecutive numbers appended by a dash to the regulation section number.

This manual supersedes Civil Aeronautics Manual 18 dated February 1957 and all supplements. As amendments and other pertinent material pertaining to Part 18 are issued, they will be included in this manual.

References to CAA will be changed to FAA where appropriate as page revisions to this manual are issued.

Introductory Note

This manual contains in consolidated form (1) Civil Air Regulations Part 18, Maintenance, Repair, and Alteration of Airframes, Powerplants, Propellers, and Appliances, dated July 17, 1956, Amendments 18–1, 18–2, and Special Civil Air Regulation SR–377A; and (2) the rules, policies, and interpretations issued by the Administrator of the Federal Aviation Agency in application to the various sections of the regulations.

FAA *rules* are supplementary regulations issued pursuant to authority expressly conferred on the Administrator in the Civil Air Regulations. Such rules are mandatory and must be complied with.

FAA *policies* provide detailed technical information on recommended methods of complying with the Civil Air Regulations. Such policies are for the guidance of the public and are not mandatory in nature.

FAA *interpretations* define or explain words and phrases of the Civil Air Regulations. Such interpretations are for the guidance of the public and will be followed by the Agency in determining compliance with the regulations.

The manual is arranged to give the number, title, and text of each section of the regulations followed by any rules, policies, or interpretations applicable to that section. The rules, policies, or interpretations of the Administrator are identified by consecutive numbers appended by a dash to the regulation section number.

This manual supersedes Civil Aeronautics Manual 18 dated February 1957 and all supplements. As amendments and other pertinent material pertaining to Part 18 are issued, they will be included in this manual.

References to CAA will be changed to FAA where appropriate as page revisions to this manual are issued.

FEDERAL AVIATION AGENCY
Washington, D.C.

Civil Aeronautics Manuals–Volume III

Notice to FAA Holders of Volume III of the CAM's — December 15, 1959

SUBJECT: New Issuance System for Volume III Manuals.

The FAA has recently inaugurated an individual issuance system for the Civil Aeronautics Manuals. They will no longer be grouped in volumes. Each manual will be issued separately and will contain both the pertinent Civil Air Regulation and any related CAM material.

Civil Aeronautics Manual 18 (dated February 1957) as included in Volume III, and amended by supplements 1, 2, 4, 6, 7, 8, and 9 to Volume III, is up to date except for editorial corrections to change CAA to FAA.

In view of this fact, CAM 18 will not be reprinted at this time. However, to facilitate the breaking down of the volume issuance system of the CAM's, we are providing a new FAA cover to replace the CAA cover dated February 1957. This new cover is dated December 15, 1959, and the next change to this manual will be issued as Supplement No. 1 to CAM 18. Also, references to CAA will be changed to FAA, where appropriate, as page revisions to CAM 18 are issued.

Civil Aeronautics Manual 24, which was formerly issued by the CAA as part of Volume III, is being revised and copies will be available concurrently with the issuance of this notice. Therefore, CAM 24, dated January 1957, should be removed from Volume III and destroyed.

Remove the following pages:

CAM 18
- Cover dated February 1957
- Introductory Note—page III

CAM 24
- Destroy CAM 24 dated January 1957

Insert the following new pages:

CAM 18
- Cover dated December 15, 1959
- Introductory Note—page III

William B. Davis

WILLIAM B. DAVIS, *Director,*
Bureau of Flight Standards.

Attachments.

U.S. GOVERNMENT PRINTING OFFICE : 1960 O - 536788

Contents

Applicability and Definitions

	Section	Page
Applicability of this part	**18.0**	1
Definitions	**18.1**	1
Major alterations (*FAA interpretations which apply to sec. 18.1*).	18.1–1	3
Airframe major alterations	18.1–1 (a)	3
Powerplant major alterations	18.1–1 (b)	3
Propeller major alterations	18.1 1 (c)	3
Appliance major alterations	18.1–1 (d)	4
Radio communication and navigation equipment approved under type certification or the Technical Standard Order System.	18.1–1 (d) (1)	4
Procedures for handling typical major alterations (*FAA policies which apply to sec. 18.1*).	18.1–2	4
Major repairs (*FAA interpretations which apply to sec. 18.1*).	18.1–3	4
Airframe major repairs	18.1–3 (a)	4
Powerplant major repairs	18.1–3 (b)	5
Propeller major repairs	18.1–3 (c)	5
Appliance major repairs	18.1–3 (d)	5
Instrument	18.1–3 (d) (1)	5
Electronics equipment	18.1–3 (d) (2)	5
Electrical equipment	18.1–3 (d) (3)	5
Hydraulic accessories	18.1–3 (d) (4)	5
Mechanical accessories	18.1–3 (d) (5)	5
Minor alterations (*FAA interpretations which apply to sec. 18.1*).	18.1–4	5
Airframe minor alterations	18.1–4 (a)	5
Optional equipment on aircraft specification	18.1–4 (a) (1)	5
Equipment of equal or less weight	18.1–4 (a) (2)	5
Changes to improve service life	18.1–4 (a) (3)	5
Weight and/or balance change	18.1–4 (a) (4)	5
Powerplant minor alterations	18.1–4 (b)	6
Propeller minor alterations	18.1–4 (c)	6
Appliance minor alterations	18.1–4 (d)	6
Radio communication and navigation equipment approved under type certification or the Technical Standard Order System.	18.1–4 (d) (1)	6
Minor repairs (*FAA interpretations which apply to sec. 18.1*).	18.1–5	6
Airframe minor repairs	18.1–5 (a)	6
Nonstructural members	18.1–5 (a) (1)	6
Tanks	18.1–5 (a) (2)	6
Ribs, leading and trailing edges, tip strips	18.1–5 (a) (3)	6
Fabric covering	18.1–5 (a) (4)	6
Metal or plywood stressed covering	18.1–5 (a) (5)	6
Replacement of components	18.1–5 (a) (6)	6
Powerplant minor repairs	18.1–5 (b)	7
Engine top overhauls	18.1–5 (b) (1)	7
Engine complete overhauls	18.1–5 (b) (2)	7
Replacement of components	18.1–5 (b) (3)	7
Replacement of accessories	18.1–5 (b) (4)	7
Propeller minor repairs	18.1–5 (c)	7
Appliance minor repairs	18.1–5 (d)	7
Preventive maintenance (*FAA interpretations which apply to sec. 18.1*).	18.1–6	7

General

	Section	Page
Persons authorized to perform maintenance, preventive maintenance, repairs, and alterations.	**18.10**	8
Persons authorized to perform maintenance, repairs, and alterations (*FAA interpretations which apply to sec. 18.10 (a)*).	18.10–1	9
Persons authorized to approve maintenance, repairs, and alterations.	**18.11**	9
Return to service (*FAA interpretations which apply to sec. 18.11*).	18.11–1	10
Contacting GAA representative prior to alteration (*FAA policies which apply to sec. 18.11*).	18.11–2	10
Persons authorized to perform and approve 100-hour, periodic, and progressive inspections.	**18.12**	11
Appropriately rated and certificated repair stations (*FAA interpretations which apply to sec. 18.12*).	18.12–1	11
Aircraft operating limitations	**18.13**	11

Maintenance, Repair, and Alteration Records

	Section	Page
Required records and entries	**18.20**	11
Flight time in aircraft record (*FAA interpretations which apply to sec. 18.20*).	18.20–1	11
Content of repair and alteration records	**18.21**	12
Scope of repair and alteration records (*FAA interpretations which apply to sec. 18.21 (a)*).	18.21–1	12
Form and disposition of major repair or major alteration records.	**18.22**	12
Procedure for certificated mechanics (*FAA rules which apply to sec. 18.22*).	18.22–1	13
Procedure	18.22–1 (a)	13
Procedure for certificated repair stations and manufacturers (*FAA rules which apply to sec. 18.22*).	18.22–2	13
Procedure	18.22–2 (a)	13
Major alterations	18.22–2 (a) (1)	13
Major repairs	18.22–2 (a) (2)	13
Maintenance release	18.22–2 (a) (2) (i)	13
Form and disposition of periodic and progressive inspection records.	**18.23**	14
Aircraft maintenance records (*FAA rules which apply to sec. 18.23*).	18.23–1	14
Provisions for air carrier records	**18.24**	14

Performance Rules

	Section	Page
Standard of performance; general	**18.30**	14
Maintenance and repair	**18.30 (a)**	14
Alterations	**18.30 (b)**	14
Inspections	**18.30 (c)**	15
Standard of performance (*FAA interpretations which apply to sec. 18.30*).	18.30–1	15
General	18.30–1 (a)	15
Methods, techniques and practices set forth in air carrier manuals for the performance of approved continuous airworthiness maintenance and inspection programs.	18.30–1 (b)	15

Standard of performance; general—Continued	*Section*	*Page*
Wood aircraft structures (*CAA policies which apply to sec. 18.30*).	18.30–2	15
Materials	18.30–2 (a)	15
Quality of wood	18.30–2 (a) (1)	15
Species substitution	18.30–2 (a) (2)	16
Effects of shrinkage	18.30–2 (a) (3)	16
Replacement of drain holes and skin stiffeners	18.30–2 (a) (4)	16
Flutter precautions	18.30–2 (a) (5)	16
Glues and gluing	18.30–2 (a) (6)	16
Preparation of wood surfaces for gluing	18.30–2 (a) (6) (i)	16
Glues	18.30–2 (a) (6) (*ii*)	16–1
Casein glues	18.30–2 (a) (6) (ii) (*a*)	16–1
Synthetic resin glues	18.30–2 (a) (6) (ii) (*b*)	16–1
Mixing of resin glues	18.30–2 (a) (6) (ii) (*c*)	17
Gluing technique	18.30–2 (a) (6) (iii)	17
Spreading of glue	18.30–2 (a) (6) (iii) (*a*)	17
Assembly time in gluing	18.30–2 (a) (6) (iii) (*b*)	17
Gluing pressure	18.30–2 (a) (6) (iii) (*c*)	17
Method of applying pressure	18.30–2 (a) (6) (iii) (*d*)	17
Scarf joints	18.30–2 (b)	18
General	18.30–2 (b) (1)	18
Grain direction	18.30–2 (b) (2)	18
Spars	18.30–2 (c)	18
Splicing of spars	18.30–2 (c) (1)	18
Splicing of box spar webs	18.30–2 (*c*) (2)	18
Replacing solid-type spars with laminated type	18.30–2 (c) (3)	18
Longitudinal cracks and local damage	18.30–2 (c) (4)	18
Longitudinal cracking of wood wing spars in airplanes operating in arid regions.	18.30–2 (c) (4) (i)	18
Elongated holes	18.30–2 (c) (5)	19
Ribs	18.30–2 (d)	19
General	18.30–2 (d) (1)	19
Repairs of wood structures at a joint, between joints, at trailing edges, or at spars.	18.30–2 (d) (2)	19
Compression ribs	18.30–2 (d) (3)	19
Plywood skin	18.30–2 (e)	19
General	18.30–2 (e) (1)	19
Types of patches	18.30–2 (e) (1) (i)	20
Determination of single or double curvature	18.30–2 (e) (1) (ii)	20
Repairs to single curvature skin	18.30–2 (e) (1) (iii)	20
Repairs to double curvature skin	18.30–2 (e) (1) (iv)	20
Splayed patch	18.30–2 (e) (2)	20
Surface patch	18.30–2 (e) (3)	21
Scarf patch	18.30–2 (*e*) (4)	21
General	18.30–2 (e) (4) (i)	21
Scarf patches (back of skin accessible)	18.30–2 (e) (4) (ii)	21
Steps in making scarf patch (back of skin not accessible).	18.30–2 (e) (4) (iii)	21
Plug patches	18.30–2 (e) (5)	22
General	18.30–2 (e) (5) (i)	22
Steps in making oval plug patch	18.30–2 (e) (5) (ii)	22
Round plug patch	18.30–2 (e) (5) (iii)	22
Fabric patch	18.30–2 (e) (6)	22
Finishing structural repairs	18.30–2 (f)	22
General	18.30–2 (f) (1)	22
Precautions to be observed	18.30–2 (f) (2)	22
Finishing of interior surfaces	18.30–2 (f) (3)	23
Finishing of exterior surfaces	18.30–2 (f) (4)	23
Finishing of end-grain surfaces	18.30–2 (f) (5)	23
Finishing with fabric or tape	18.30–2 (f) (6)	23

Standard of performance; general—Continued	Section	Page
Fabric covering (*CAA policies which apply to sec. 18.30*)	18.30-3	24
Textile materials	18.30-3 (a)	24
Aircraft fabric	18.30-3 (a) (1)	24
Re-covering aircraft with original type fabric	18.30-3 (a) (2)	24
Reinforcing tape	18.30-3 (a) (3)	24
Surface tape	18.30-3 (a) (4)	24
Lacing cord	18.30-3 (a) (5)	24
Machine thread	18.30-3 (a) (6)	24
Hand-sewing thread	18.30-3 (a) (7)	24
Covering practices	18.30-3 (b)	24
General	18.30-3 (b) (1)	24
Flutter precautions	18.30-3 (b) (2)	24
Preparation of the structure for covering	18.30-3 (b) (3)	24
Dope-proofing	18.30-3 (b) (3) (i)	24
Chafe points	18.30-3 (b) (3) (ii)	24
Inter-rib bracing	18.30-3 (b) (3) (iii)	25
Preparation of plywood surfaces for covering	18.30-3 (b) (3) (iv)	25
Cleaning	18.30-3 (b) (3) (iv) (*a*)	25
Application of sealer and dope	18.30-3 (b) (3) (iv) (*b*)	25
Seams	18.30-3 (b) (4)	25
Location of seams	18.30-3 (b) (4) (i)	25
Sewed seams	18.30-3 (b) (4) (ii)	25
Doped seams	18.30-3 (b) (4) (iii)	25
Covering methods	18.30-3 (b) (5)	26
The envelope method	18.30-3 (b) (5) (i)	26
The blanket method	18.30-3 (b) (5) (ii)	26
Reinforcing tape	18.30-3 (b) (6)	26
Use of antitear strips	18.30-3 (b) (6) (i)	26
Lacing	18.30-3 (b) (7)	26
Wing lacing	18.30-3 (b) (7) (i)	26
Double-loop lacing	18.30-3 (b) (7) (ii)	26
Fuselage lacing	18.30-3 (b) (7) (iii)	26
Stitch spacing	18.30-3 (b) (8)	27
Surface tape (Finishing tape)	18.30-3 (b) (9)	27
Special fasteners	18.30-3 (b) (10)	27
Doping	18.30-3 (c)	27
Thinning of dopes	18.30-3 (c) (1)	27
Blushing and use of blush-retarding thinner	18.30-3 (c) (2)	27
Number of coats	18.30-3 (c) (3)	28
Technique	18.30-3 (c) (4)	28
Applying surface tape and reinforcing patches	18.30-3 (c) (5)	28
Installation of drainage grommets	18.30-3 (c) (6)	28
Use of fungicidal dopes	18.30-3 (c) (7)	28
Rejuvenation of fabric	18.30-3 (c) (8)	28
Common dope troubles	18.30-3 (c) (9)	29
Repairs to fabric covering	18.30-3 (d)	29
Repair of tears in fabric	18.30-3 (d) (1)	29
Sewed patch repair	18.30-3 (d) (2)	29
Repair by sewing in repair panel	18.30-3 (d) (3)	30
Unsewed (doped on) repairs	18.30-3 (d) (4)	30
Repair by a doped-in panel	18.30-3 (d) (5)	30
Testing of fabric covering	18.30-3 (e)	31
Strength criteria for aircraft fabric	18.30-3 (e) (1)	31
Replacement of fabric covering with metal sheet	18.30-3 (f)	31
Reinforcement or replacement of conventional fabric covering with glass cloth.	18.30-3 (g)	31
Classifications	18.30-3 (g) (1)	31
Detailed recommendations applicable to Class A and B.	18.30-3 (g) (2)	32
Detailed recommendations for replacement glass cloth covering (Class C).	18.30-3 (g) (3)	33

Standard of performance; general—Continued	*Section*	*Page*
Metal aircraft structures (*CAA policies which apply to sec. 18.30*).	18.30–4	33
Metal construction	18.30–4 (a)	33
Identification and inspection of materials	18.30–4 (a) (1)	33
Corrosion prevention treatment, cleaners, and paint removers.	18.30–4 (a) (2)	33
Bolts, screws, and fasteners	18.30–4 (a) (3)	33
Flutter precautions	18.30–4 (a) (4)	33
Brazing	18.30–4 (a) (5)	33
Welded steel structures	18.30–4 (b)	33
General	18.30–4 (b) (1)	33
Preparation for welding	18.30–4 (b) (1) (i)	33
Cleaning prior to welding	18.30–4 (b) (1) (ii)	34
Condition of completed weld	18.30–4 (b) (1) (iii)	34
Practices to guard against	18.30–4 (b) (1) (iv)	34
Torch size (oxyacetylene welding)	18.30–4 (b) (1) (v)	34
Welding rods and electrodes	18.30–4 (b) (1) (vi)	34
Rosette welds	18.30–4 (b) (1) (vii)	34
Heat-treated members	18.30–4 (b) (1) (viii)	34
Steel parts not to be welded	18.30–4 (b) (1) (ix)	34
Brace wires and cables	18.30–4 (b) (1) (ix) (*a*)	34
Brazed and soldered parts	18.30–4 (b) (1) (ix) (*b*)	34
Alloy steel parts	18.30–4 (b) (1) (ix) (*c*)	35
Repair of tubular members	18.30–4 (b) (2)	35
Inspection	18.30–4 (b) (2) (i)	35
Location and alinement of welds	18.30–4 (b) (2) (ii)	35
Members dented at a cluster	18.30–4 (b) (2) (iii)	35
Members dented in a bay	18.30–4 (b) (2) (iv)	35
Repair by welded sleeve	18.30–4 (b) (2) (iv) (*a*)	35
Repair by bolted sleeve	18.30–4 (b) (2) (iv) (*b*)	35
Welded-patch repair	18.30–4 (b) (2) (v)	35
Dented tubing	18.30–4 (b) (2) (v) (*a*)	35
Punctured tubing	18.30–4 (b) (2) (v) (*b*)	35
Location of patch	18.30–4 (b) (2) (v) (*c*)	36
Splicing by inner sleeve method	18.30–4 (b) (2) (vi)	36
Splicing by outer sleeve method	18.30–4 (b) (2) (vii)	36
Splicing using larger diameter replacement tubes	18.30–4 (b) (2) (viii)	36
Repairs at built-in fuselage fittings	18.30–4 (b) (3)	37
Tube of larger diameter than original	18.30–4 (b) (3) (i)	37
Tube of same diameter as original	18.30–4 (b) (3) (ii)	37
Simple sleeve	18.30–4 (b) (3) (iii)	37
Large difference in longeron diameter each side of fitting.	18.30–4 (b) (3) (iv)	37
Engine mounts	18.30–4 (b) (4)	37
General	18.30–4 (b) (4) (i)	37
Check of alinement	18.30–4 (b) (4) (ii)	37
Cause for rejection	18.30–4 (b) (4) (iii)	37
Engine mount ring damage	18.30–4 (b) (4) (iv)	38
Landing gears	18.30–4 (b) (5)	38
Round tube construction	18.30–4 (b) (5) (i)	38
Streamline tube construction	18.30–4 (b) (5) (ii)	38
Axle assemblies	18.30–4 (b) (5) (iii)	38
Ski pedestals	18.30–4 (b) (5) (iv)	38
Built-up tubular wing or tail surface spars	18.30–4 (b) (6)	38
Wing and tail surface brace struts	18.30–4 (b) (7)	38
Location of splices	18.30–4 (b) (7) (i)	38
Fit and alinement	18.30–4 (b) (7) (ii)	38
Repairs to welded parts	18.30–4 (b) (8)	38
Replacing welded joints	18.30–4 (b) (8) (i)	38
Replacing weld deposit	18.30–4 (b) (8) (ii)	38

Standard of performance; general—Continued		
Metal aircraft structures—Continued	*Section*	*Page*
Stainless steel structures	18.30–4 (c)	39
General	18.30–4 (c) (1)	39
Secondary structural and nonstructural elements	18.30–4 (c) (2)	39
Riveted or bolted steel truss type structures	18.30–4 (d)	39
Aluminum alloy structures	18.30–4 (e)	39
General	18.30–4 (e) (1)	39
Use of annealed alloys for structural parts	18.30–4 (e) (1) (i)	39
Hygroscopic materials improperly moisture-proofed.	18.30–4 (e) (1) (ii)	39
Drilling oversized holes	18.30–4 (e) (1) (iii)	39
Disassembly prior to repairing	18.30–4 (e) (1) (iv)	39
Selection of material for replacement parts	18.30–4 (e) (2)	40
Forming sheet metal parts	18.30–4 (e) (2) (i)	40
Heat treatment	18.30–4 (e) (3)	40
General	18.30–4 (e) (3) (i)	40
Quenching in hot water or air	18.30–4 (e) (3) (ii)	40
Transferring too slowly from heat treatment medium to quench tank.	18.30–4 (e) (3) (iii)	40
Reheating at temperatures above boiling water	18.30–4 (e) (3) (iv)	40
Riveting	18.30–4 (e) (4)	40
Identification of rivet material	18.30–4 (e) (4) (i)	40
Replacement of aluminum alloy rivets	18.30–4 (e) (4) (ii)	40
Replacement rivet size and strength	18.30–4 (e) (4) (ii) (*a*)	40
Replacement rivet edge distances and spacings for sheet joints.	18.30–4 (e) (4) (ii) (*b*)	40
Single row	18.30–4 (e) (4) (ii) (*b*) (*1*)	41
Double row	18.30–4 (e) (4) (ii) (*b*) (*2*)	41
Triple or multiple rows	18.30–4 (e) (4) (ii) (*b*) (*3*)	41
Use of A17S–T3 aluminum alloy replacement rivets.	18.30–4 (e) (4) (iii)	41
Driving of rivets	18.30–4 (e) (4) (iv)	41
Blind-type and hollow rivets	18.30–4 (e) (4) (v)	41
New and revised rivet patterns	18.30–4 (e) (4) (vi)	41
Repair methods	18.30–4 (e) (5)	41
Precautions	18.30–4 (e) (5) (i)	41
Splicing of tubes	18.30–4 (e) (5) (ii)	41
Repairs to aluminum alloy members	18.30–4 (e) (5) (iii)	41
Wing and tail surface ribs	18.30–4 (e) (5) (iv)	42
Trailing and leading edges and tip strips	18.30–4 (e) (5) (iv) (*a*)	42
Repair of damaged skin	18.30–4 (e) (5) (v)	42
Replacement of skin panels	18.30–4 (e) (5) (v) (*a*)	42
Patching of small holes	18.30–4 (e) (5) (v) (*b*)	42
Splicing of sheets	18.30–4 (e) (5) (vi)	42
Straightening of stringers or intermediate frames	18.30–4 (e) (5) (vii)	43
Members slightly bent	18.30–4 (e) (5) (vii) (*a*)	43
Local heating	18.30–4 (e) (5) (vii) (*b*)	43
Splicing of stringers and flanges	18.30–4 (e) (5) (viii)	43
Statement of principles	18.30–4 (e) (5) (viii) (*a*)	43
Size of splicing members	18.30–4 (e) (5) (viii) (*b*)	43
The diameter of rivets in stringers	18.30–4 (e) (5) (viii) (*c*)	43
The number of rivets	18.30–4 (e) (5) (viii) (*d*)	43
Splicing of intermediate frames	18.30–4 (e) (5) (viii) (*e*)	44
Repairing cracked members	18.30–4 (e) (5) (ix)	44
Fittings	18.30–4 (f)	44
Steel fittings	18.30–4 (f) (1)	44
Inspections for defects	18.30–4 (f) (1) (i)	44
Torn, kinked, or cracked fittings	18.30–4 (f) (1) (ii)	44
Elongated or worn bolt holes	18.30–4 (f) (1) (iii)	44
Aluminum and aluminum alloy fittings	18.30–4 (f) (2)	44
Castings	18.30–4 (g)	44

Standard of performance; general—Continued	Section	Page
Control cables and terminals (*CAA policies which apply to sec. 18.30*).	18.30–5	45
Control cables and wires	18.30–5 (a)	45
Splicing	18.30–5 (a) (1)	45
Substitution of cable	18.30–5 (a) (2)	45
Cutting and heating	18.30–5 (a) (3)	45
Rust prevention	18.30–5 (a) (4)	45
Swaged terminals	18.30–5 (b)	45
Cable slippage in terminal	18.30–5 (b) (1)	45
Ball-and-socket-type terminals	18.30–5 (b) (2)	46
Woven splice terminal	18.30–5 (c)	46
Wrap-soldered splice	18.30–5 (d)	46
Safetying of turnbuckles	18.30–5 (e)	47
Double wrap method	18.30–5 (e) (1)	48
Single wrap method	18.30–5 (e) (2)	48
Bolts, screws, and miscellaneous fasteners (*CAA policies which apply to sec. 18.30*).	18.30–6	48
Bolts	18.30–6 (a)	48
Identification	18.30–6 (a) (1)	48
Grip length	18.30–6 (a) (2)	49
Locking or safetying of bolts	18.30–6 (a) (3)	49
Bolt fit	18.30–6 (a) (4)	49
Torques	18.30–6 (a) (5)	49
Hex-head bolts (AN–3 through AN–20)	18.30–6 (a) (6)	49
Close-tolerance bolts (AN–173 through AN–186) (hex-head), and (NAS–80 through NAS–86) (100° countersunk).	18.30–6 (a) (7)	49
Internal wrenching bolts (MS–20004 through MS–20024 or NAS–495).	18.30–6 (a) (8)	49
Drilled-head bolts (AN–73 through AN–81)	18.30–6 (a) (9)	50
Screws	18.30–6 (b)	50
Structural screws (NAS–204 through NAS–235) (AN–509 and AN–525).	18.30–6 (b) (1)	50
Self-tapping screws	18.30–6 (b) (2)	50
Pins	18.30–6 (c)	50
Nuts	18.30–6 (d)	50
Self-locking nuts	18.30–6 (d) (1)	50
Aircraft castle nut (AN–310)	18.30–6 (d) (2)	51
Miscellaneous aircraft nuts	18.30–6 (d) (3)	51
Washers	18.30–6 (e)	51
Rivets	18.30–6 (f)	52
Standard solid-shank rivets	18.30–6 (f) (1)	52
Material applications	18.30–6 (f) (1) (i)	52
Blind rivets	18.30–6 (f) (2)	52
Hi-shear rivets	18.30–6 (f) (3)	53
Fasteners (cowl and fairing)	18.30–6 (g)	53
Unconventional attachments	18.30–6 (h)	53
Corrosion protection, cleaners, and paint removers (*CAA policies which apply to sec. 18.30*).	18.30–7	53
Corrosion protection	18.30–7 (a)	53
Dissimilar metals corrosion	18.30–7 (a) (1)	53
Intergranular corrosion	18.30–7 (a) (2)	53
Stress corrosion	18.30–7 (a) (3)	54
Chemical	18.30–7 (a) (4)	54
Fretting	18.30–7 (a) (5)	54
Corrosion protection measures	18.30–7 (b)	54
Anodizing and related processes	18.30–7 (b) (1)	54
Plating	18.30–7 (b) (2)	54
Parkerizing and bonderizing	18.30–7 (b) (3)	54
Dichromate treatment for magnesium	18.30–7 (b) (4)	54

	Section	Page
Standard of performance; general—Continued		
Corrosion protection, cleaners, and paint removers—Continued		
Corrosion protection measures—Continued		
Chromium pickle treatment for magnesium	18.30–7 (b) (5)	55
Galvanic anodizing treatment for magnesium	18.30–7 (b) (6)	55
Cladding	18.30–7 (b) (7)	55
Metal spraying	18.30–7 (b) (8)	55
Organic coatings	18.30–7 (b) (9)	55
Dope-proofing	18.30–7 (b) (10)	55
Tube interiors	18.30–7 (b) (11)	55
Corrosion-proofing of landplanes and seaplanes	18.30–7 (c)	55
Corrosion-proofing of landplanes converted to seaplanes.	18.30–7 (d)	55
Necessary minimum precautions	18.30–7 (d) (1)	55
Recommended precautions	18.30–7 (d) (2)	56
Cleaners, polishes, brighteners, and paint removers	18.30–7 (e)	56
Materials	18.30–7 (e) (1)	56
Removal of corrosion deposits from aluminum	18.30–7 (e) (2)	56
Surface stains	18.30–7 (e) (3)	56
Light duty cleaners	18.30–7 (e) (4)	56
Removal of spilled battery acid	18.30–7 (e) (5)	57
Identification and inspection of material (*CAA policies which apply to sec. 18.30*).	18.30–8	57
Identification of steel stock	18.30–8 (a)	57
Interchangeability of steel tubing	18.30–8 (a) (1)	57
Identification of aluminum	18.30–8 (b)	57
Clad aluminum alloys	18.30–8 (b) (1)	57
A test for distinguishing heat-treatable and non-heat-treatable aluminum alloys.	18.30–8 (b) (2)	58
Hardness testing	18.30–8 (c)	58
Brinnell hardness test	18.30–8 (c) (1)	58
Rockwell hardness test	18.30–8 (c) (2)	58
Vickers hardness test	18.30–8 (c) (3)	58
Testing of aluminum	18.30–8 (c) (4)	58
Inspection of metals	18.30–8 (d)	58
Inspection by magnifying glass after welding	18.30–8 (d) (1)	58
Magnetic particle inspection	18.30–8 (d) (2)	58
Portable magnetic particle inspection	18.30–8 (d) (3)	59
X-ray or radiographic inspection	18.30–8 (d) (4)	59
Fluorescent penetrant	18.30–8 (d) (5)	60
Dye penetrants	18.30–8 (d) (6)	60
Cleaning	18.30–8 (d) (6) (i)	60
Application of penetrant	18.30–8 (d) (6) (ii)	61
Removal of dye penetrant	18.30–8 (d) (6) (iii)	61
Application of developer	18.30–8 (d) (6) (iv)	61
Identification of fabric	18.30–8 (e)	61
Identification of plastics	18.30–8 (f)	61
Thermoplastics	18.30–8 (f) (1)	61
Thermosetting plastics	18.30–8 (f) (2)	61
Aircraft equipment (*CAA policies which apply to sec. 18.30*)	18.30–9	61
General	18.30–9 (a)	61
Landing gear equipment	18.30–9 (b)	61
Wheels	18.30–9 (b) (1)	61
Corrosion of wheels	18.30–9 (b) (1) (i)	62
Dented or distorted wheels	18.30–9 (b) (1) (ii)	62
Wheel bearings	18.30–9 (b) (1) (iii)	62

Standard of performance: general—Continued

	Section	Page
Aircraft equipment—Continued		
Landing gear equipment—Continued		
Brakes	18.30–9 (b) (2)	62
Hydraulic brakes	18.30–9 (b) (2) (i)	62
Mechanical brakes	18.30–9 (b) (2) (ii)	62
Tires	18.30–9 (b) (3)	62
Inspection	18.30–9 (b) (3) (i)	62
Repair	18.30–9 (b) (3) (ii)	62
Clearance	18.30–9 (b) (3) (iii)	62
Treading	18.30–9 (b) (3) (iv)	63
Tubes	18.30–9 (b) (4)	63
Floats	18.30–9 (b) (5)	63
Skis and ski installations	18.30–9 (b) (6)	64
Repair of ski runners	18.30–9 (b) (6) (i)	64
Ski pedestals	18.30–9 (b) (6) (ii)	64
Tubular pedestals	18.30–9 (b) (6) (ii) (*a*)	64
Cast pedestals	18.30–9 (b) (6) (ii) (*b*)	64
Sheet metal pedestals	18.39–9 (b) (6) (ii) (*c*)	64
Flares	18.30–9 (c)	64
Life preservers and life rafts	18.30–9 (d)	64
General	18.30–9 (d) (1)	64
Inspection procedure for life preservers	18.30–9 (d) (2)	64
Repair of life preservers	18.30–9 (d) (3)	65
Inspection procedure for life rafts	18.30–9 (d) (4)	65
Repair of life rafts	18.30–9 (d) (5)	66
Rating	18.30–9 (d) (6)	66
Parachutes	18.30–9 (e)	66
Safety belts	18.30–9 (f)	66
Fire extinguishers	18.30–9 (g)	67
Radio equipment	18.30–9 (h)	67
Windshields and enclosures (*CAA policies which apply to sec. 18.30*).	18.30–10	67
Types of plastics	18.30–10 (a)	67
Replacement panels	18.30–10 (a) (1)	67
Installation procedures for acrylic plastics	18.30–10 (b)	67
Installation procedures for cellulose acetate plastics	18.30–10 (c)	68
Repair of plastics	18.30–10 (d)	68
Surface patch	18.30–10 (d) (1)	68
Plug patch	18.30–10 (d) (2)	68
Cleaning and polishing transparent plastic	18.30–10 (e)	69
Hydraulic systems (*CAA policies which apply to sec. 18.30*).	18.30–11	69
Hydraulic lines and fittings	18.30–11 (a)	69
Replacement of metal lines	18.30–11 (a) (1)	69
Tube connections	18.30–11 (a) (2)	69
Repair of metal tube lines	18.30–11 (a) (3)	70
Replacement of flexible lines	18.30–11 (a) (4)	70
Hydraulic components	18.30–11 (b)	70
Electrical systems (*CAA policies which apply to sec. 18.30*).	18.30–12	70
General	18.30–12 (a)	70
Inspection and operating checking	18.30–12 (b)	70
Cleaning and preservation	18.30–12 (b) (1)	71
Batteries and battery containers	18.30–12 (b) (1) (i)	71
Miscellaneous check items	18.30–12 (b) (2)	71
Major adjustments	18.30–12 (c)	71
Equipment replacement	18.30–12 (d)	71

Standard of performance; general—Continued		
Electrical systems—Continued	*Section*	*Page*
Aircraft electric cable installation	18.30–12 (e)	71
Types of electric cable	18.30–12 (e) (1)	71
Size of electric cable	18.30–12 (e) (2)	71
Criteria for selection	18.30–12 (e) (2) (i)	71
Electric cable chart	18.30–12 (e) (2) (ii)	71
Example of how to use the electric cable chart. Figure 12–1.	18.30–12 (e) (2) (ii) (*a*)	72
Knowing the cable length and ampere load	18.30–12 (e) (2) (ii) (*a*) (*1*)	72
Knowing the cable size and ampere load	18.30–12 (e) (2) (ii) (*a*) (*2*)	72
For other than one-volt drop	18.30–12 (e) (2) (ii) (*a*) (*3*)	72
Resistance	18.30–12 (e) (2) (iii)	72
Aluminum cable	18.30–12 (e) (2) (iv)	72
Cable terminals	18.30–12 (e) (3)	73
Solder vs. solderless terminals	18.30–12 (e) (3) (i)	73
Solderless terminal joints	18.30–12 (e) (3) (ii)	73
Attachment of terminals to studs	18.30–12 (e) (3) (iii)	73
Terminal strips	18.30–12 (e) (4)	73
Terminal strip stud sizes	18.30–12 (e) (4) (i)	73
Terminal strip installation	18.30–12 (e) (4) (ii)	73
Connector assemblies	18.30–12 (e) (5)	73
Connector assembly application	18.30–12 (e) (5) (i)	73
Through bolts	18.30–12 (e) (6)	74
Splices in electric cable	18.30–12 (e) (7)	74
Wiring installation practice	18.30–12 (e) (8)	74
General	18.30–12 (e) (8) (i)	74
Open wiring installation	18.30–12 (e) (8) (ii)	74
Cable bundles	18.30–12 (e) (8) (ii) (*a*)	74
Insulating tubing	18.30–12 (e) (8) (ii) (*b*)	74
Clamping of cable bundles	18.30–12 (e) (8) (ii) (*c*)	74
Clamp installation	18.30–12 (e) (8) (ii) (*d*)	74
Separation from flammable fluid lines	18.30–12 (e) (8) (ii) (*e*)	74
Conduit installations	18.30–12 (e) (8) (iii)	74
Size of conduit	18.30–12 (e) (8) (iii) (*a*)	75
Conduit fittings	18.30–12 (e) (8) (iii) (*b*)	75
Conduit installation	18.30–12 (e) (8) (iii) (*c*)	75
Wiring identification	18.30–12 (e) (8) (iv)	75
Junction boxes and enclosures	18.30–12 (f)	75
Junction box construction	18.30–12 (f) (1)	75
Internal arrangement	18.30–12 (f) (2)	75
Junction box installations	18.30–12 (f) (3)	75
Junction box wiring	18.30–12 (f) (4)	75
Bonding	18.30–12 (g)	75
General	18.30–12 (g) (1)	75
Bonding jumper installations	18.30–12 (g) (2)	75
Bonding connections	18.30–12 (g) (2) (i)	76
Corrosion prevention	18.30–12 (g) (2) (ii)	76
Bonding jumper attachment	18.30–12 (g) (2) (iii)	76
Ground return connections	18.30–12 (g) (3)	76
Insulation of electrical equipment from ground	18.30–12 (g) (4)	76
Anticollision light installations	18.30–12 (h)	76
Color	18.30–12 (h) (1)	76
Performance	18.30–12 (h) (2)	76
Location	18.30–12 (h) (3)	76
Crew vision interference	18.30–12 (h) (4)	76
Electrical modification	18.30–12 (h) (5)	76
Wiring practice	18.30–12 (h) (5) (i)	76
Circuit protection	18.30–12 (h) (5) (ii)	76
Generator capacity	18.30–12 (h) (5) (iii)	76
Anticollision light switch	18.30–12 (h) (5) (iv)	76–1

	Section	Page
Standard of performance; general—Continued		
Electrical systems—Continued		
Anticollision light installations—Continued		
Structural modification	18.30–12 (h) (6)	76–1
Electrical load limits	18.30–12 (i)	76–1
[Storage battery installations	18.30–12 (j)	76–2
[Battery installation hazards and means of prevention	18.30–12 (j) (1)	76–2
[Explosion	18.30–12 (j) (1) (i)	76–2
[Noxious fumes	18.30–12 (j) (1) (ii)	76–2
[Electrolyte corrosion	18.30–12 (j) (1) (iii)	76–3
[Battery overheat failure	18.30–12 (j) (1) (iv)	76–3
[Substitution of nickel-cadmium batteries for lead-acid type.	18.30–12 (j) (2)	76–3
[Battery additives and electrolyte replacements	18.30–12 (j) (3)	76–3
[Circuit protection devices	18.30–12 (k)	76–3
[General	18.30–12 (k) (1)	76–3
[Matching protector to cable	18.30–12 (k) (2)	76–3
[Circuit protector chart	18.30–12 (k) (3)	76–3
[Circuit breaker type	18.30–12 (k) (4)]	76–4
Instruments (*CAA policies which apply to sec. 18.30*)	18.30–13	76–4
General	18.30–13 (a)	76–4
Instrument installation and maintenance	18.30–13 (a) (1)	76–4
Vibration insulation	18.30–13 (a) (2)	76–4
Pitot-static system	18.30–13 (b)	76–4
System components	18.30–13 (b) (1)	76–4
Pitot-static tube	18.30–13 (b) (1) (i)	76–4
Static pressure ports or vents	18.30–13 (b) (1) (ii)	76–4
Heater not operative	18.30–13 (b) (1) (iii)	76–4
Clogging of pitot-static tube or static vent drains	18.30–13 (b) (1) (iv)	76–4
Relocation of pitot-static tube	18.30–13 (b) (1) (v)	77
Pitot-static lines	18.30–13 (b) (2)	77
Poor drainage of lines	18.30–13 (b) (2) (i)	77
Replacing the lines	18.30–13 (b) (2) (ii)	77
Leak testing static lines	18.30–13 (b) (2) (iii)	77
Leak testing pitot lines	18.30–13 (b) (2) (iv)	77
Maintenance of lines	18.30–13 (b) (2) (v)	77
Magnetic direction indicator (compass)	18.30–13 (c)	77
Correction for errors in magnetic direction indicator	18.30–13 (c) (1)	77
Swinging the indicator (ground)	18.30–13 (c) (1) (i)	77
Indicator cannot be properly compensated	18.30–13 (c) (1) (ii)	78
Erratic indications of magnetic indicator	18.30–13 (c) (1) (iii)	78
Engines and fuel systems (*CAA policies which apply to sec. 18.30*).	18.30–14	78
Engines	18.30–14 (a)	78
Magnetic, fluorescent penetrant, X-ray, supersonic, and hydrostatic inspections.	18.30–14 (a) (1)	78
Rebuilt engines	18.30–14 (a) (2)	78
Crankshafts	18.30–14 (a) (3)	78
Replacement parts in certificated engines	18.30–14 (a) (4)	78
Cylinder hold-down nuts and cap screws	18.30–14 (a) (5)	79
Run-in time	18.30–14 (a) (6)	79
Re-use of safetying devices	18.30–14 (a) (7)	79
Self-locking nuts for aircraft engines and accessories	18.30–14 (a) (8)	79
Designating converted engines	18.30–14 (a) (9)	80
Welding in the repair of engines	18.30–14 (a) (10)	81
General	18.30–14 (a) (10) (i)	81
Welding of minor parts	18.30–14 (a) (10) (ii)	81
Metallizing	18.30–14 (a) (11)	81
Plating	18.30–14 (a) (12)	81
General	18.30–14 (a) (12) (i)	81
Plating of highly stressed parts	18.30–14 (a) (12) (ii)	81
Plating of minor parts	18.30–14 (a) (12) (iii)	81

	Section	Page
Standard of performance; general—Continued		
Engines and fuel systems—Continued		
Engines—Continued		
Corrosion prevention	18.30–14 (a) (13)	81
Engine accessories	18.30–14 (a) (14)	81
Fuel systems	18.30–14 (b)	81
Fuel tanks	18.30–14 (b) (1)	81
Removal of flux after welding	18.30–14 (b) (1) (i)	82
Fuel tank caps, vents, and overflow lines	18.30–14 (b) (2)	82
Fuel lines	18.30–14 (b) (3)	82
Fuel strainers and sediment bowls	18.30–14 (b) (4)	82
Propellers (*CAA policies which apply to sec. 18.30*)	18.30–15	82
Inspection of propellers	18.30–15 (a)	82
General	18.30–15 (a) (1)	82
Wood or composition propellers and blades	18.30–15 (a) (2)	82
Metal propellers and blades	18.30–15 (a) (3)	83
Lubrication	18.30–15 (a) (4)	83
Repair of propellers	18.30–15 (b)	83
General	18.30–15 (b) (1)	83
Wood or composition propellers and blades	18.30–15 (b) (2)	84
Metal propellers and blades	18.30–15 (b) (3)	88
Steel hubs and hub parts	18.30–15 (b) (4)	90
Control systems	18.40–15 (b) (5)	91
De-icing systems	18.30–15 (b) (6)	91
Overhaul of propellers	18.30–15 (c)	91
General	18.30–15 (c) (1)	91
Hub and hub parts	18.30–15 (c) (2)	91
Plating for hubs and parts	18.30–15 (c) (3)	92
Aluminum propellers and blades	18.30–15 (c) (4)	92
Assembly	18.30–15 (c) (5)	92
Assembly of propeller to engine	18.30–15 (d)	93
Fixed-pitch propellers	18.30–15 (d) (1)	93
Alterations to propellers	18.30–15 (e)	93
General	18.30–15 (e) (1)	93
Alterations to wood detachable blades and fixed-pitch propellers.	18.30–15 (e) (2)	93
Precautions	18.30–15 (f)	94
General	18.30–15 (f) (1)	94
Wood propellers	18.30–15 (f) (2)	94
Composition propellers	18.30–15 (f) (3)	94
Weight and balance control (*CAA policies which apply to sec. 18.30*)	18.30–16	94
General	18.30–16 (a)	94
Terminology	18.30–16 (a) (1)	94
Maximum weight	18.30–16 (a) (1) (i)	94
Empty weight	18.30–16 (a) (1) (ii)	94
Useful load	18.30–16 (a) (1) (iii)	95
Weight check	18.30–16 (a) (1) (iv)	95
Datum	18.30–16 (a) (1) (v)	95
Arm (or moment arm)	18.30–16 (a) (1) (vi)	95
Moment	18.30–16 (a) (1) (vii)	95
Center of gravity	18.30–16 (a) (1) (viii)	95
Empty weight center of gravity	18.30–16 (a) (1) (ix)	95
Empty weight center of gravity range	18.30–16 (a) (1) (x)	95
Operating center of gravity range	18.30–16 (a) (1) (xi)	95
Mean aerodynamic chord (MAC)	18.30–16 (a) (1) (xii)	95
Weighing point	18.30–16 (a) (1) (xiii)	95
Minimum fuel	18.30–16 (a) (1) (xiv)	96
Full oil	18.30–16 (a) (1) (xv)	96
Tare	18.30–16 (a) (1) (xvi)	96
Weighing procedure	18.30–16 (b)	96

Standard of performance; general—Continued

	Section	Page
Weight and balance—Continued		
Weight and balance computations	18.30–16 (c)	96
Unit weights for weight and balance purposes	18.30–16 (c) (1)	97
Algebraic signs	18.30–16 (c) (2)	97
Weight and balance extreme conditions	18.30–16 (c) (3)	97
Forward weight and balance check	18.30–16 (c) (3) (i)	97
Rearward weight and balance check	18.30–16 (c) (3) (ii)	97
Loading conditions and/or placards	18.30–16 (c) (4)	97
Equipment list	18.30–16 (c) (5)	98
Equipment changes	18.30–16 (c) (5) (i)	98
Sample weight and balance reports	18.30–16 (c) (6)	98
Installation of ballast	18.30–16 (d)	98
Loading schedule	18.30–16 (e)	99
Procedures and guiding comments covering typical major alterations and modifications (*CAA policies which apply to sec. 18.30*).	18.30–17	99
The installation of an engine of a type other than that covered by a type certificate or otherwise approved by the Administrator.	18.30–17 (a)	99
Airspeed placard limits	18.30–17 (a) (1)	100
Engine placard limits	18.30–17 (a) (2)	100
Inspection and flight tests	18.30–17 (a) (3)	101
The conversion of an approved type landplane or seaplane to approved skiplane status.	18.30–17 (b)	101
Approval of the ski model	*18.30–17 (b) (1)*	*101*
Approval of an airplane equipped with approved skis.	18.30–17 (b) (2)	101
Increase in gross weight	18.30–17 (c)	102
Change in weight distribution	18.30–17 (d)	102
Installation of new items	18.30–17 (e)	102
Alterations or modifications of control surfaces and systems.	18.30–17 (f)	102
Fairing and cowling modifications	18.30–17 (g)	103
Appliance installations	18.30–17 (h)	104
Batteries	18.30–17 (i)	104
Powerplant changes	18.30–17 (j)	104
Propeller changes	18.30–17 (k)	104
Periodic and 100-hour inspections (*CAA rules which apply to sec. 18.30 (c)*).	18.30–18	104
General	18.30–18 (a)	104
Inspection procedures	18.30–18 (a) (1)	104
Fuselage and hull group	18.30–18 (a) (1) (i)	104
Cabin and cockpit group	18.30–18 (a) (1) (ii)	104
Engine and nacelle group	18.30–18 (a) (1) (iii)	105
Landing gear group	18.30–18 (a) (1) (iv)	105
Wing and center section group	18.30–18 (a) (1) (v)	105
Empennage group	18.30–18 (a) (1) (vi)	105
Propeller group	18.30–18 (a) (1) (vii)	105
Radio group	18.30–18 (a) (1) (viii)	106
Miscellaneous group	18.30–18 (a) (1) (ix)	106
Operational check—preflight	18.30–18 (a) (1) (x)	106
Aircraft maintenance record entries	18.30–18 (a) (1) (xi)	106
Periodic or 100-hour inspections	18.30–18 (a) (1) (xi) (*a*)	106
Unairworthy aircraft	18.30–18 (a) (1) (xi) (*b*)	106
Progressive inspection (*CAA rules which apply to sec. 18.30 (c)*).	18.30–19	106
General	18.30–19 (a)	106
Routine and detailed inspection	18.30–19 (b)	106

	Section	Page
Standard of performance; general—Continued		
Progressive inspection—Continued		
Inspection schedule	18.30–19 (c)	107
Inspection procedures	18.30–19 (d)	107
Records	18.30–19 (e)	107
Procedures covering major alteration of approved radio equipment (*CAA interpretations which apply to sec. 18.30 (b)*).	18.30–20	107
Radio equipment approved under Part 16 of the Civil Air Regulations.	18.30–20 (a)	107
Testing approved radio equipment after alteration (*CAA policies which apply to sec. 18.30 (b)*).	18.30–21	108
Radio systems (*CAA policies which apply to sec. 18.30*)	18.30–22	108
Wiring	18.30–22 (a)	108
Location of radio equipment	18.30–22 (b)	108
Mounting of radio equipment	18.30–22 (c)	108
Bonding	18.30–22 (d)	109
Available power supply	18.30–22 (e)	109
Elimination of engine ignition noise	18.30–22 (f)	109
Antennas, general	18.30–22 (g)	109
Range receiver antennas (200 to 400 kc.)	18.30–22 (h)	110
Direction finding antennas (100 to 1750 kc.)	18.30–22 (i)	110
HF transmitting antenna—fixed	18.30–22 (j)	111
VHF transmitting antenna—"Whip" and streamlined blade.	18.30–22 (k)	111
VHF navigation receiving antennas	18.30–22 (l)	112
Marker receiving antenna	18.30–22 (m)	112
Glide slope receiving antenna	18.30–22 (n)	112
Distance measuring antennas	18.30–22 (o)	112

Appendix A
Forms

ACA–337 Repair and Alteration Form (Aircraft, Propellers, Engines, and Instruments)	114
ACA–1226 Malfunctioning and Defects Report	118
ACA–2350 Aircraft Use and Inspection Report	120

Appendix B
Tables

Table		
2–1.	Selection and Properties of Aircraft Wood	124
2–2.	Cold-Setting Synthetic-Resin Glues	126
2–3.	Minimum Recommended Bend Radii for Aircraft Plywood	127
3–1.	Textile Fabric Used in Aircraft Covering	128
3–2.	Miscellaneous Textile Materials	129
4–1.	Oxyacetylene Welding Rod Properties	130
4–2.	Arc Welding Electrode Properties	130
4–3.	Recommended Bend Radii for 90° Bend—in Terms of Aluminum and Aluminum Alloy Sheet Thickness	130
4–4.	Number of Rivets Required for Splices (Single-Lap Joint) in Bare 14S–T6, 24S–T3, 24S–T36, and 75S–T6 Sheet, Clad 14S–T6, 24S–T3, 24S–T36, and 75S–T6 Sheet, 24S–T4, and 75S–T6 Plate, Bar, Rod, Tube, and Extrusions, and 14S–T6 Extrusions	131
4–5.	Number of Rivets Required for Splices (Single-Lap Joint) in 17ST, 17ST Alclad, 17SRT, and 17SRT Alclad Sheet, Plate, Bar, Rod, Tube, and Extrusions	132
4–6.	Number of Rivets Required for Splices (Single-Lap Joint) in 52S (All Hardness) Sheet	133
5–1.	Aircraft Cable	134
5–2.	Turnbuckle Safetying Guide	134

Appendix B—Continued

Tables—Continued

Figure		Page
6–1.	Recommended Nut Torques	135
8–1.	Numerical System for Steel Identification	135
8–2.	Hardness Values for Steel	136
8–3.	Hardness Values for Aluminum Alloys	137
11–1.	Tube Data	137
12–1.	Copper Electric Cable Current Carrying Capacity	138
12–2.	Aluminum Electric Cable Current Carrying Capacity	138
[12–3.	Wire and Circuit Protector Chart]	138–1

Appendix C

Figures

Figure		
2–1.	Tapering of Face Plates	140
2–2.	Consideration of Grain Direction When Making Scarf Joints	140
2–3.	Method of Splicing Solid or Laminated Rectangular Spars	141
2–4.	Method of Splicing Solid "I" Spars	141
2–5.	Repairs to Built-Up "I" Spar	142
2–6.	Method of Splicing Box-Spar Flanges (Plate Method)	142
2–7.	Method of Splicing Box-Spar Webs	143
2–8.	Method of Reinforcing a Longitudinal Crack and/or Local Damage in a Solid or Internally Routed Spar	144
2–9.	Repair of Wood Ribs	145
2–10.	Typical Wing Compression Rib Repairs	146
2–11.	Splayed Patch	147
2–12.	Oval Plug Patch Assembly	147
2–13.	Surface Patches	148
2–14.	Scarf Patches—Back of Skin Accessible	149
2–15.	Scarf Patches—Back of Skin Not Accessible	150
2–16.	Round Plug-Patch Assembly	151
3–1.	Typical Methods of Attaching Fabric	152
3–2.	Fabric Attachment Spacing	153
3–3.	Repair of Tears in Fabric	153
3–4.	Splice Knot	154
3–5.	Standard Knot for Rib Lacing (Modified Seine Knot)	154
3–6.	Starting Stitch for Rib Stitching	155
3–7.	Standard Double Loop Lacing	156
3–8.	Standard Knot for Double Loop Lacing	157
4–1.	Members Dented at a Cluster	158
4–2.	Members Dented in a Bay—Repair by Welded Sleeve	159
4–3.	Welded Patch Repair	160
4–4.	Splicing by Inner Sleeve Method	160
4–5.	Splicing by Outer Sleeve Method—Replacement by Welded Outside Sleeve	161
4–6.	Tube Replacement at a Station by Welded Outer Sleeves	162
4–7.	Splicing Using Larger Diameter Replacement Tube	162
4–8.	Repairs at Built-in Fuselage Fittings	163
4–9.	Streamline Tube Splice Using Round Tube (Applicable to Landing Gears)	164
4–10.	Streamline Tube Splice Using Split Sleeve (Applicable to Wing and Tail Surface Brace Struts and Other Members)	165
4–11.	Streamline Tube Splice Using Split Insert (Applicable to Landing Gears)	166
4–12.	Streamline Tube Splice Using Plates (Applicable to Landing Gears)	167
4–13.	Representative Types of Repairable and Nonrepairable Axle Assemblies	168
4–14.	Rivet Hole Spacing and Edge Distance for Single-Lap Sheet Splices	169
4–15.	Riveting Practice and Rivet Imperfections	170
4–16.	Typical Repair Method for Tubular Members of Aluminum Alloy	171
4–17.	Typical Repair for Buckled or Cracked Formed Metal Wing Rib Capstrips	172
4–18.	Typical Metal Rib Repairs (Usually Found on Small and Medium-Size Aircraft)	173

Appendix C—Continued

Figures—Continued

Figure		Page
4–19.	Typical Repairs of Trailing Edges	174
4–20.	Typical Repairs of Stressed Sheet Covering	175
4–21.	Typical Stringer and Flange Splices	176
4–22.	Example of Stringer Splice (Material—17ST AL Alloy)	177
4–23.	Application of Typical Flange Splices and Reinforcement	178
4–24.	Example of Splice of Intermediate Frame (Material—17ST AL Alloy)	179
4–25.	Typical Methods of Repairing Cracked Leading and Trailing Edges and Rib Intersections	180
4–26.	Typical Methods of Replacing Cracked Members at Fittings	181
4–27.	Typical Methods of Repairing Cracked Frame and Stiffener Combinations	182
4–28.	Typical Repairs to Rudder and to Fuselage at Tail Post	183
4–29.	Typical Methods of Repairing Elongated or Worn Bolt Holes	184
5–1.	Preparation of a Woven Cable Splice	185
5–2.	Wrapped or Spliced Cable Terminals	186
5–3.	Safetying Turnbuckles	187
6–1.	Bolt Identification	188
10–1.	Stop-Drilling Cracks	189
10–2.	Surface Patches	189
10–3.	Plug-Patch Repair	189
12–1.	Electric Cable Chart (AN-S-C-48 Cable)	190
12–2.	Typical Anticollision Light Installation in a Skin Panel	190–1
12–3.	Typical Anticollision Light Installation Involving a Cut Stringer	190–2
12–4.	Typical Anticollision Light Installation in a Fin Tip	190–3
15–1.	Protractor and Method of Measuring Angle of Bend in Aluminum Alloy Propellers	191
15–2.	Method of Repairing Surface Cracks, Nicks, etc., on Aluminum Alloy Propellers	192
15–3.	Correct and Incorrect Method of Reworking Leading Edge of Aluminum Alloy Propellers	193
15–4.	Repair Limits to Blade Section Width and Thickness for Aluminum Alloy Propellers	194
15–5.	Method of Repairing Damaged Tip of Aluminum Alloy Propellers	195
15–6.	Propeller Repair by Addition of Small Inlay	196
15–6.	Propeller Repair by Addition of Small Inlay. (Cont.)	197
15–6.	Propeller Repair by Addition of Small Inlay. (Cont.)	198
15–7.	Repair of Fixed Pitch Hub and Propeller With Elongated or Damaged Bolt Holes	199
16–1.	Typical Datum Locations	200
16–2.	Illustration of Arm (or Moment Arm)	201
16–3.	Example of Moment Computation	201
16–4.	Empty Weight Center-of-Gravity Formulas	202
16–5.	Empty Weight and Empty Weight Center-of-Gravity—Tail-Wheel Type Aircraft	203
16–6.	Empty Weight and Empty Weight Center-of-Gravity—Nose-Wheel Type Aircraft	204
16–7.	Operating Center-of-Gravity Range	205
16–8.	Weighing Point Centerline	205
16–9.	Empty Weight and Empty Weight Center-of-Gravity When Aircraft Is Weighted With Oil	206
16–10.	Example of Check of Most Forward Weight and Balance Extreme	207
16–11.	Example of Check of Most Rearward Weight and Balance Extreme	208
16–12.	Loading Conditions: Determination of the Number of Passengers and Baggage Permissible With Full Fuel	209
16–13.	Loading Conditions: Determination of the Fuel and Baggage Permissible With Maximum Passengers	210
16–14.	Loading Conditions: Determination of the Fuel and the Number and Location of Passengers Permissible With Maximum Baggage	211
16–15.	Effects of the Addition of Equipment Items on Balance	212
16–16.	Example of Moment and Weight Changes Resulting From Equipment Changes	213
16–17.	Sample Weight and Balance Report To Determine Empty Weight Center-of-Gravity	214
16–18.	Sample Weight and Balance Report Including an Equipment Change for Aircraft Fully Loaded	215

Appendix C—Continued

Figures—Continued

Figure		*Page*
22–1.	"L," "T" and "V"-Type Antenna	216
22–2.	Whip and Blade Antennas	217
22–3.	Antenna Ground Plane for Nonmetallic Airplanes	217
22–4.	Two Preferred Locations for VOR Antennas To Provide Good Signal Pickup and Minimum Engine Ignition Interference	218
22–5.	Instrument Landing System Glide Slope and Localizer Receiver Antennas	219
22–6.	Preferred Positions of Distance Measuring Antennas in Order of Preference	220

Appendix D

Examples

Example		
1.	Example of Periodic and 100-Hour Aircraft Inspection Checklist	221
2.	Examples of Typical Routine and Detailed Inspections for Aircraft Components and Systems for Progressive Inspection	222
3.	Example of Progressive Inspection Schedule	223

Appendix E

Special Civil Air Regulations which affect Part 18		225
[SR–377C.	Mechanical Work Performed on United States Registered Aircraft by Certain Canadian Mechanics]	227
SR–397.	Authorization for the United States Forest Service to Deviate From the Civil Air Regulations	229

Addendum

Preambles to Amendments to Part 18		P–1

Maintenance, Repair, and Alteration of Airframes, Powerplants, Propellers, and Appliances

Applicability and Definitions

18.0 *Applicability of this part.*—This part establishes rules for the performance of maintenance, repairs, and alterations on certificated aircraft or any component thereof.

18.1 *Definitions.*—As used in this part terms are defined as follows:

Aircraft. An aircraft is any contrivance now known or hereafter invented, used, or designed for navigation of or flight in the air, including airframe, powerplant, propeller, and appliances.

Aircraft engine.—An aircraft engine is an engine used, or intended to be used, for propulsion of aircraft, and includes all parts, appurtenances, and accessories thereof other than propellers.

Airframe.—Airframe means any and all kinds of fuselages, booms, nacelles, cowlings, fairings, empennages, airfoil surfaces, and landing gear, and all parts, accessories, or controls, of whatever description, appertaining thereto, but not including powerplants and propellers.

Alteration.—An alteration means any appreciable change in the design of an airframe, powerplant, propeller, or appliance.

Appliances.—Appliances are instruments, equipment, apparatus, parts, appurtenances, or accessories, of whatever description, which are used, or are capable of being or intended to be used, in the navigation, operation, or control of aircraft in flight (including communication equipment, electronic devices, and any other mechanism or mechanisms installed in or attached to aircraft during flight, but excluding parachutes), and which are not a part or parts of airframes, powerplants, or propellers.

Appropriately certificated air carrier.—An Appropriately certificated air carrier is an air carrier holding an air carrier operating certificate, and which is required, either by its operating certificate or by operations specifications approved by the Administrator, to provide for a continuous airworthiness maintenance and inspection program to be performed by the carrier in accordance with its maintenance manual.

Approved.—Approved, when used either alone or as modifying such words as aircraft, airframe, powerplant, propeller, appliance, method, or technique, means approved by the Administrator of [the Federal Aviation Agency] in accordance with the applicable requirements of this subchapter.

Authorized representative of the Administrator.—An authorized representative of the Administrator is any employee of [the Federal Aviation Agency] or any private person, authorized by the Administrator to perform particular duties of the Administrator under the provisions of this part.

Certificated aircraft.—A certificated aircraft is a civil aircraft for which an airworthiness certificate issued by the Administrator has not been surrendered or revoked.

Certificated commercial operator.—A certificated commercial operator is any person holding a commercial operator certificate as required by the provisions of Part 45 of this subchapter.

Certificated mechanic.—A certificated mechanic is an individual holding a valid mechanic certificate with appropriate ratings issued by the Administrator.

Certificated repair station.—A certificated repair station is a facility for the maintenance, repair, and alteration of airframes, powerplants, propellers, or appliances, holding a valid repair station certificate with appropriate ratings issued by the Administrator.

Certificated repairman.—A certificated repairman is an individual holding a valid repairman certificate issued in accordance with Subpart B of Part 24 of this subchapter.

Component.—A component is a constituent part of an aircraft.

Instrument.—An instrument is a device utilizing internal mechanism to indicate visually or aurally the attitude, altitude, performance, or operation of an aircraft or any component thereof, and shall include electronic instrumentation and devices for the automatic control of navigation of the aircraft in flight.

Maintenance.—Maintenance, which includes preventive maintenance, is the inspection, overhaul, repair, upkeep, and preservation of airframes, powerplants, propellers, and appliances, including the replacement of parts.

Major alteration.—A major alteration of an aircraft or any component thereof is:

(a) An alteration which might cause an appreciable change in its weight, balance, structural strength, performance, powerplant operation, flight characteristics, or other qualities affecting airworthiness, or

(b) An alteration which is not accomplished in accordance with accepted practices or cannot be performed by means of elementary operations.

Major repair.—A major repair to an aircraft or any component thereof is:

(a) A repair which, if improperly accomplished, would adversely affect the structural strength, performance, flight characteristics, powerplant operation, or other qualities affecting airworthiness, or

(b) A repair which is not accomplished in accordance with accepted practices or cannot be performed by means of elementary operations.

Manufacturer.—A manufacturer is any person who:

(a) Holds a type or production certificate for and manufactures an aircraft, aircraft engine, propeller, or appliance, or

(b) Manufactures an approved appliance in accordance with a specification issued by the Administrator.

Minor alteration.—A minor alteration of an aircraft or any component thereof is an alteration other than a major alteration.

Minor repair.—A minor repair is any repair other than a major repair.

One-hundred-hour inspection.—A 100-hour inspection is an inspection of an aircraft required within each 100 hours of time in service and is a complete airworthiness inspection of such aircraft and its various components and systems in accordance with procedures prescribed by the Administrator.

Periodic inspection.—A periodic inspection is an inspection of an aircraft required once each 12 calendar months and is a complete airworthiness inspection of such aircraft and its various components and systems in accordance with procedures prescribed by the Administrator.

Person.—Person means any individual, firm, copartnership, corporation, company, association, joint-stock association, or body politic; and includes any trustee, receiver, assignee, or other similiar representative thereof.

Powerplant.—A powerplant is an aircraft engine and its component parts and other parts necessary to properly install such engine in an aircraft, but not the propeller (if used).

Preventive maintenance.—Preventive maintenance means simple or minor preservation operations and the replacement of small standard parts not involving complex assembly operations.

Progressive inspection.—A progressive inspection is a continuing airworthiness inspection of an aircraft and its various components and systems at scheduled intervals in accordance with procedures prescribed by the Administrator.

Propeller.—A propeller is a device for propelling an aircraft through the air, having blades mounted on a powerdriven shaft, which when rotated produces by its action on the air a thrust approximately parallel to the longi-

tudinal axis of the aircraft, and also includes control components normally supplied by the manufacturer of the propeller. It also includes a system of rotating airfoils which serve either to counteract the effect of the main rotor torque of a rotorcraft or to maneuver a rotorcraft about one or more of its three principal axes.

***Repair.*—Repair means the restoration of an airframe, powerplant, propeller, or appliance to a condition for safe operation after damage or deterioration.**

***Time in service.*—Time in service, as used in computing maintenance and inspection time records, is the time from the moment an aircraft leaves the ground until it touches the ground at the end of a flight.**

***Type.*—Type is a specific classification of aircraft having the same basic design including all modifications thereto except those modifications which result in a change in handling or flight characteristics.**

18.1–1 *Major alterations—(CAA interpretations which apply to section 18.1).*—Changes of the following types to an airframe, powerplant, propeller, or appliance, when not listed in the specifications issued by the Civil Aeronautics Administration, are considered aircraft major alterations.

(a) *Airframe major alterations.*

(1) Major changes to the basic design or external configuration of any structural component such as:

Wings.
Tail surfaces.
Fuselage.
Engine mounts.
Control system.
Landing gear.
Hull or floats.
Elements of components (spars, ribs, fittings, shock absorbers, bracing, cowlings, fairings, balance weights, etc.) of an airframe.
Hydraulic and electrical actuating system of components.
Rotor blades.

[(2) All changes to the empty weight or empty balance which result in an increase in the certificated maximum weight or center of gravity limits of the aircraft.]

(3) Changes to the basic design of the fuel, oil, cooling, heating, cabin pressurization, electrical, hydraulic, de-icing, and exhaust systems.

(4) Modifications to the wing or to fixed or movable control surfaces which affect flutter and vibration characteristics.

(5) Installation or modification of any system affecting the structural airworthiness, flight behavior, or control of the aircraft.

(b) *Powerplant major alterations.*—Changes such as the following are considered major powerplant alterations:

(1) Deleted.

(2) Conversion of an aircraft engine from one approved model to another, involving any changes in compression ratio, propeller reduction gear, impeller gear ratios or the substitution of major engine parts which requires extensive rework and testing of the engine. (See section 18.30–14 (a) (9) for details of identification of converted engines.)

(3) Modification of the engine by replacing aircraft engine structural parts with other than those supplied by the original manufacturer or otherwise specifically approved by the Civil Aeronautics Administration.[1]

(4) Installation of an accessory which has not been approved for the engine.

(5) Removal of accessories that are listed as required equipment on the aircraft or engine specification.

(6) Deleted.

(7) Installation of structural parts other than the type of parts approved for the installation.

(8) Conversions of any sort for the purpose of using fuel of rating or grade other than that called for in the engine specification.

(c) *Propeller major alterations.*—Changes such as the following, when not authorized in the propeller specifications issued by the Civil

[1] Changes as above require extensive proof tests as specified in Part 13 of the Civil Air Regulations.

459004 O - 58 - 2

Aeronautics Administration,[2] are considered major propeller alterations:

(1) Changes in blade design.

(2) Changes in hub design.

(3) Changes in governor or control design.

(4) Installation of a propeller governor or feathering system.

(5) Installation of propeller de-icing system.

(6) Installation of parts not approved for the propeller.

(7) Any changes in the design of a balance propeller or its controls.

(d) *Appliance major alterations.*—Changes to the basic design not made in accordance with "Administrator of Civil Aeronautics" approved recommendations of the appliance manufacturer or in accordance with a CAA Airworthiness Directive are considered to be major appliance alterations.

(1) *Radio communication and navigation equipment approved under type certification or the Technical Standard Order System.*—Changes in the basic design which have an effect on frequency stability, noise level, sensitivity, selectivity, distortion, spurious radiation, AVC characteristics, or ability to meet environmental test conditions or any other changes which have an effect on the performance of the equipment are considered to be major appliance alterations.

(18 F. R. 7387, Nov. 21, 1953, effective Nov. 30, 1953; amended in 19 F. R. 4185, July 9, 1954, effective July 15, 1954; amended in 20 F. R. 7535, Oct. 8, 1955, effective Oct. 31, 1955; amended in 23 F. R. 1718, Mar. 13, effective Mar. 15, 1958.)

18.1–2 *Procedures for handling certain typical major alterations or modifications.—(CAA policies which apply to section 18.1).*—Procedures for handling certain typical alterations or modifications are discussed in detail in sections 18.30–17.

(18 F. R. 7387, Nov. 21, 1953, effective Nov. 30, 1953.)

18.1–3 *Major repairs.—(CAA interpretations which apply to section 18.1).*—Repairs of the following types to an airframe, powerplant, propeller, or appliance are considered to be major repairs:

(a) *Airframe major repairs.*

(1) All repairs involving the strengthening, reinforcing, splicing and manufacturing of primary structural members or their replacement, when replacement is by fabrication such as riveting or welding, are considered airframe major repairs. The following are examples of such members:

Box beams.
Monocoque or semimonocoque wings or control surfaces.
Wing stringers or chord members.
Repairs involving the substitution of materials.
Spars.
Spar flanges.
Members of truss-type beams.
Thin sheet webs of beams.
Keel and chine members of boat hulls or floats.
Corrugated sheet compression members which act as flange material of wings or tail surfaces.
Wing main ribs and compression members.
Wing or tail surface brace struts.
Engine mounts.
Fuselage longerons.
Members of the side truss, horizontal truss, or bulkheads.
Main seat support braces and brackets.
Landing gear brace struts.
Axles.
Wheels.
Skis, and ski pedestals.
Parts of the control system such as control columns, pedals, shafts, brackets, or horns.

(2) The repair of damaged areas in metal or plywood stressed covering exceeding 6 inches in any direction; the repair of portions of skin sheets by making additional seams; splicing of skin sheets.

(3) Repair of three or more adjacent wing or control surface ribs or leading edge of wings and control surfaces, between such adjacent ribs.

(4) Repair of fabric covering involving a greater area than required to repair two ad-

[2] Changes such as outlined above usually involve proof testing of the propeller or governor in accordance with Part 14 of the Civil Air Regulations.

jacent ribs; replacement of fabric on fabric covered components such as wings, fuselages, stabilizers, and control surfaces.

(5) Rebuilding, including rebottoming, of removable or integral fuel tanks, and oil tanks.

(b) *Powerplant major repairs.*—Repairs such as the following are considered powerplant major repairs:

(1) Any maintenance operation requiring (i) the separation or disassembly of a crankcase or crankshaft of an engine equipped with an integral supercharger and/or propeller reduction gearing; (ii) disassembly of a nonfloat type carburetor or fuel injection unit used with such engines; or, (iii) top overhaul of such engines.

(2) Special repairs to structural engine parts by welding, plating, metalizing or other methods. (See section 18.30–14 (a) (10)–(12) for details.)

(c) *Propeller major repairs.*—Repairs of the following types are considered to be major propeller repairs:

(1) Any repairs to or straightening of steel blades.
(2) Repairing or machining of steel hubs.
(3) Shortening of blades.
(4) Retipping of wood propellers.
(5) Replacement of outer laminations on fixed pitch wood propellers.
(6) Repairing elongated bolt holes in the hub of fixed pitch wood propellers.
(7) Inlay work on wood blades.
(8) All repairs to composition blades.
(9) Replacement of tip fabric.
(10) Replacement of plastic covering.
(11) Repair of propeller governors.
(12) Repair of balance propellers of rotorcraft.
(13) Overhaul of controllable pitch propellers (see section 18.30–15 (c) (1)).
(14) Repairs to deep dents, cuts, scars, nicks, etc., and straightening of aluminum blades, such as described in section 18.30–15 (b) (3) (iii).
(15) The repair or replacement of internal elements of blades.

(d) *Appliance major repairs.*—Repairs to appliances which are complex repair operations requiring the use of skilled techniques and/or special tools and test equipment not available to a mechanic working outside of an appliance shop are considered to be a major repair. Major repairs to appliances include, but are not limited to the following:

(1) *Instrument.*—All repairs to instruments.
(2) *Electronics equipment.*—Adjusting and calibration of VOR, ILS or DME equipment.
(3) *Electrical equipment.*—Rewinding of any electrical accessory field coil.
(4) *Hydraulic accessories.*—Complete disassembly of complex hydraulic power valves.
(5) *Mechanical accessories.*—(i) Pressure type carburetor overhaul. (ii) Overhaul of pressure type fuel, oil or hydraulic pumps.

(18 F. R. 7387, Nov. 21, 1953, effective Nov. 30, 1953.)

18.1–4 *Minor alterations.*—(*CAA interpretations which apply to section 18.1*).—Changes such as the following to an airframe, powerplant, propeller, or appliance are considered minor aircraft alterations:

(a) *Airframe minor alterations.*—Changes such as listed below are considered to be airframe minor alterations:

(1) *Optional equipment on aircraft specification.*—The installation or removal of specific items of optional equipment listed in the aircraft specification [3] when such installation is made in accordance with the manufacturer's instructions.

(2) *Equipment of equal or less weight.*—The installation or removal of equipment of equal or less weight and in the same location as that listed as optional equipment in the aircraft specification.

[(3) *Changes to improve service life.*—Changes of a minor nature may be made to structural and nonstructural elements for the purpose of improving the service life or reducing maintenance costs.

[(4) *Weight and/or balance change.*—All changes to the empty weight or empty balances which do not result in an increase in the certificated maximum weight or center of gravity limits of the aircraft. (See sec. 18.30–16.)]

[3] Copies of aircraft specifications may be obtained from CAA [Special Services Division, Attention: W–146], Washington 25, D. C.

(b) *Powerplant minor alterations.*—Any powerplant alteration other than listed as a major alteration under section 18.1–1 (b) is considered to be a minor powerplant alteration. The following are examples of powerplant minor alterations:

(1) Alterations to supporting brackets or braces of units of the powerplant which do not adversely affect the structural integrity of such parts.

(2) Changes to the cowling which do not affect engine cooling, such as revisions to mounting bracket attachments.

(3) The alteration or conversion of an aircraft engine by simple substitution of parts of different design or addition of CAA approved parts in accordance with approved practices and in conformity to the engine manufacturer's or CAA instructions.

(c) *Propeller minor alterations.*—Any propeller alteration other than defined as a major alteration under section 18.1–1 (c) is considered to be a minor propeller alteration. The following are examples of minor propeller alterations:

(1) Initial installation of a propeller spinner.

(2) Changes to the basic design of, or the relocating of brackets or braces of the propeller controls.

(3) Changes to the basic design of propeller control rods or cables.

(d) *Appliance minor alterations.*—Changes to the basic design made in accordance with the "Administrator of Civil Aeronautics" approved recommendations of the appliance manufacturer, or in accordance with a CAA Airworthiness Directive are considered to be minor appliance alterations.

(1) *Radio communication and navigation equipment approved under type certification or the Technical Standard Order System.*—Minor alterations include but are not limited to substitution of standard parts of one manufacturer for those of another. Such parts include tubes, semi-conducting devices such as crystal diodes and transistors, resistors, capacitors, chokes, tube sockets, relay and standard hardware.

(18 F. R. 7388, Nov. 21, 1953, effective Nov. 30, 1953; amended in 20 F. R. 7535, Oct. 8, 1955, effective Oct. 31, 1955; amended in 23 F. R. 1718, Mar. 13, effective Mar. 15, 1958.)

18.1–5 *Minor repairs.*—(*CAA interpretations which apply to section 18.1*).—Repairs of the following types to an airframe, powerplant, propeller, or appliance are considered to be minor repairs:

(a) *Airframe minor repairs.*

(1) *Nonstructural members.*—Repairs to nonstructural members which may affect the airworthiness of an aircraft, such as:

Cowlings.
Wing and control surface fairings.
Electrical installations.
Windshields.

(2) *Tanks.*—Patching and repairing of leaks in nonintegral fuel, oil, hydraulic, and de-icer fluid tanks.

(3) *Ribs, leading and trailing edges, tip strips.*—The repair of: Not more than two adjacent wing or control surface ribs of a conventional type (wood or metal); the leading edge of wing and control surfaces between two adjacent wing or control surface ribs; the trailing edge of wings, control surfaces, and flaps; the wing and control surface tip strips.

(4) *Fabric covering.*—Patching of fabric involving replacement of fabric covering of surfaces when such replacement is of an area not greater than that required to repair two adjacent ribs.

(5) *Metal or plywood stressed covering.*—The patching of holes in metal or plywood stressed covering not to exceed 6 inches in any direction when ribs, stringers, bulkheads, and reinforcements are not directly affected.

(6) *Replacement of components.*—Replacement of components or complete units such as listed below with parts supplied by the original manufacturer or manufactured in accordance with approved drawings:

Wings.[4]
Replaceable wing tips.[4]
Control surfaces [4] (fixed and movable) and control cables.
Wing or control surface bracing (struts or wires).

[4] See section 43.21 regarding flight test after component replacement.

Floats.
Landing gears.
Tail wheel assemblies.
Engine mounts (prefabricated and bolted on, not to be welded on).
Fuel and oil system accessories.
Hydraulic system accessories.
Fuel and oil tanks.
Powerplant controls.
Propeller controls.
Appliances such as: instruments, hydraulic or electrical actuating units of components, cabin heaters, radio units, auto-pilots.

(b) *Powerplant minor repairs.*—Any powerplant repair other than listed under section 18.1–3 as a major repair, or under section 18.1–6 as preventive maintenance, is considered to be a minor repair. The following are examples of powerplant minor repairs:

(1) *Engine top overhauls.*—Engines which have neither an integral supercharger nor integral propeller reduction gearing, consisting of the following:

Removal of cylinders.
Grinding valves and removing carbon.
Fitting new rings.
Adjustments of valve gear or replacement of parts in valve mechanism outside of the crankcase.

(2) *Engine complete overhauls.*—Complete overhauls of engines which have neither an integral supercharger nor integral propeller reduction gearing.

(3) *Replacement of components.*—The replacement of components not a part of the basic structure of the engine, such as carburetors, magnetos, ignition harnesses, on engines of any horsepower.

(4) *Replacement of accessories.*—The replacement of components such as generators, starters, fuel pumps, vacuum pumps, hydraulic pumps, and oil coolers on engines of any horsepower.

(c) *Propeller minor repairs.*—Repairs such as the following to propellers are considered to be propeller minor repairs:

(1) Repairing dents, cuts, scars, scratches, nicks, leading edge pitting of aluminum blades, provided removal or treatment does not materially affect the strength, weight, balance, or performance of the propeller. (See section 18.30–15 (b) (3) (iii).)

(2) Repairing dents, cuts, scars, scratches, nicks, and small cracks parallel to the grain of wood blades. (See section 18.30–15 (b) (2) (i).)

(3) Removal and installation of propellers.

(4) The assembly and disassembly of propellers to the extent necessary to permit—

(i) Assembly of propellers partially disassembled for shipment and not requiring the use of balancing equipment;

(ii) The accomplishment of routine servicing and inspection;

(iii) Replacement of parts other than those which normally require the use of skilled techniques, special tools and test equipment. (See section 18.30–1 (a).)

(5) Balancing of fixed pitch and ground adjustable propellers.

(6) Refinishing of wood propellers.

(d) *Appliance minor repairs.*—Any repair to an appliance which would not be defined as a major appliance repair under section 18.1–1 (d) or preventive maintenance under section 18.1–6 is considered to be a minor appliance repair.

18.1–6 *Preventive maintenance.*—*(CAA interpretations which apply to section 18.1).*—The following are considered to be typical preventive maintenance operations:

Removal, installation, and repair of landing gear tires.
Replacing of elastic shock absorber cords on landing gear.
Servicing landing gear shock struts by adding oil and/or air.
Servicing landing gear wheel bearings, such as cleaning and greasing.
Replacing defective safety wiring or cotter keys.
Any lubrication not requiring disassembly other than removal of nonstructural cover plates, cowlings, fairings, etc.
Making simple fabric patches not requiring rib stitching or the removal of structural parts or control surfaces.

Replenishing hydraulic fluid in hydraulic reservoir.

Refinishing decorative coating of fuselage, wings, and tail group surfaces (excluding balanced control surfaces), fairings, cowling, landing gear, cabin or cockpit interior not requiring removal or disassembly of any primary structure or operation system such as hydraulic or fuel system.

Applying preservative or protective material to components where no disassembly of primary structure or operation systems is involved, such as seaplane preservation (paralkatone to control cables, etc.), anticorrosive paint to structures or components where such coating is not prohibited or is not contrary to good practices.

Cabin or cockpit interior work (repairing upholstery and decorative furnishings) which does not require disassembly of any primary structure or operation system or interfere with an operating system or affect primary structure of the aircraft.

Small simple repairs to fairings, nonstructural cover plates, cowlings, such as drilling stop holes (section 18.30), small patches and reinforcements not making any change to contour where such change would interfere with proper air flow.

Replacing of side windows where such work does not interfere with structure or any operating system such as controls, electrical equipment, etc.

Replacing of safety belts.

Replacing of seats or seat parts with replacement parts approved for the aircraft, not involving disassembly of any primary structure or operating system.

Trouble shooting and repairing broken circuits in landing light wiring circuits.

Replacing of bulbs, reflectors, and lenses of position and landing lights.

Replacing of wheels and skis where no weight and balance computation is involved.

Replacing of any cowling not requiring removal of the propeller or any disconnecting of flight controls.

Replacing or cleaning and setting of spark plug gap clearance.

Replacing of any hose connection except hydraulic connections.

Replacing prefabricated fuel lines.

Cleaning fuel and oil strainers

Replacing of batteries and checking fluid level and specific gravity.

[The removal and installation of glider wings and tail surfaces which are specifically designed for quick removal and installation when such removal and installation can be accomplished by the pilot.]

(Published in 18 F. R. 7389, Nov. 21, 1953, effective Nov. 30, 1953; amended in 23 F. R. 5378, July 16, 1958, effective Aug. 15, 1958.)

General

18.10 *Persons authorized to perform maintenance, preventive maintenance, repairs, and alterations.*—No person shall perform maintenance, preventive maintenance, repairs, or alterations on certificated aircraft coming within the applicability of this part or on any component thereof, except as provided as follows:

NOTE: The Communications Act of 1934, as amended, and the rules and regulations of the Federal Communications Commission require that all transmitter adjustments or tests during or coincident with the installation, servicing, or maintenance of a radio station licensed by the Federal Communications Commission which may affect the proper operation of such station shall be made by or under the immediate supervision and responsibility of a person holding a first- or second-class radio operator license issued by the Federal Communications Commission, either radiotelephone or radiotelegraph as may be appropriate for the class of station concerned, who shall be responsible for the proper functioning of the station equipment.

(a) A certificated mechanic or a person who works under the direct supervision of such mechanic may perform maintenance, repairs, and alterations on aircraft or aircraft components including related appliances, appropriate to his rating, but excluding major repairs and alterations to propellers and all repairs and alterations to instruments.

(b) An appropriately rated repair station may perform maintenance, repairs, and alterations on aircraft or aircraft components, including propellers and appliances, as provided in Part 52 of this subchapter.

(c) A certificated pilot may perform on aircraft owned or operated by him, except aircraft used in air carrier service, such preventive maintenance as may be authorized by the Administrator.

(d) A manufacturer shall be subject to the requirements of paragraphs (a) and (b) of this section, except that he may rebuild or alter:

(1) Any product manufactured by him under a type or production certificate, or

(2) Any product manufactured by him and approved under the terms of a Technical

Standard Order or Product and Process Specification issued by the Administrator.

(e) An appropriately certificated air carrier may perform maintenance, repairs, and alterations on aircraft or aircraft components, including propellers and appliances, as provided for in its continuous airworthiness maintenance and inspection program and its maintenance manual. It may also perform maintenance, repairs, and alterations on any aircraft or aircraft components, including propellers and appliances, owned or operated by another air carrier as provided for in the applicable continuous airworthiness maintenance and inspection program and maintenance manual of such other air carrier.

(f) A certificated commercial operator may perform maintenance, repairs, and alterations on its own aircraft or aircraft components, including propellers and appliances, as provided for in its continuous airworthiness maintenance and inspection program and its maintenance manual.

18.10–1 *Persons authorized to perform maintenance, repairs, and alterations.—(CAA interpretations which apply to section 18.10 (a)).—* Direct supervision means that the supervising mechanic personally maintains such observation of the work being performed as is necessary to insure that the work is being performed properly, and the supervising mechanic is readily available in person for consultation with the person performing the work.

18.11 *Persons authorized to approve maintenance, repairs, and alterations.*

NOTE: Section 43.21 of this subchapter requires that when an aircraft has undergone any repair or alteration which may have appreciably changed its flight characteristics or substantially affected its operation in flight, such aircraft, prior to carrying passengers, shall be test flown.

[(a) *Maintenance, minor repairs, and minor alterations.*—Except for preventive maintenance performed as authorized in section 18.10 (c), which shall not require approval, no airframe, powerplant, propeller, or appliance which has undergone maintenance, minor repair, or minor alteration may be approved and returned to service except by one of the following:]

(1) An appropriately rated certificated mechanic; or

(2) An appropriately rated certificated repair station; or

(3) An appropriately certificated air carrier; or

(4) A manufacturer, if the product has been rebuilt or altered by the manufacturer under the provisions of section 18.10 (d); or

(5) A certificated commercial operator.

(b) *Major repairs and major alterations.*—No airframe, powerplant, propeller, or appliance, which has undergone any major repair or major alteration shall be returned to service until such repair or alteration has been examined inspected, and approved as airworthy by one of the following:

NOTE: A major repair or major alteration whose design has not previously been approved by the Administrator may require the submittal of technical data and/or flight tests in order to establish compliance with the applicable airworthiness provisions. Examples of such major alterations for which it would be desirable to contact a representative of the Administrator prior to accomplishment of the alteration are given in Civil Aeronautics Manual 18. See also section 1.25 of this subchapter.

(1) An authorized representative of the Administrator; or

(2) An appropriately rated certificated repair station, if the work has been performed by such repair station in accordance with a manual, specification, or other technical data approved by the Administrator; or

(3) A manufacturer, if the product has been rebuilt or altered by the manufacturer under the provisions of section 18.10 (d) and in accordance with a manual, specification, or other technical data approved by the Administrator; or

(4) An appropriately certificated air carrier, if the work has been performed by such air carrier in accordance with a manual, specification, or other technical data approved by the Administrator; or

(5) An appropriately rated certificated repair station, a manufacturer, or an appropriately certificated air carrier, if the product has been approved under the terms of a Technical Standard Order and the work is performed in accordance with data furnished by the product manufacturer which he asserts meet the terms of the Technical Standard Order; or

(6) A certificated commercial operator, if the work has been performed on aircraft listed in the operating certificate of that operator and has been performed in accordance with a manual, specification, or other technical data approved by the Administrator; or

(7) A certificated mechanic holding both airframe and powerplant ratings when authorized by the Administrator in accordance with the provisions of Part 24 of this subchapter, if the work has been performed in accordance with a manual, specification, or other technical data approved by the Administrator.

18.11-1 *Return to service.—(CAA interpretations which apply to section 18.11).*—An airframe, powerplant, propeller, or appliance which has undergone maintenance, repair, or alteration is considered returned to service when it has been determined airworthy by a person authorized to approve maintenance, repairs, or alterations under section 18.11, and:

(a) Appropriate aircraft record entries have been made and approved by a person authorized under section 18.11 (a).

(b) The repair and alteration form authorized or furnished by the Administrator has been properly executed and approved by a person authorized under section 18.11 (b).

(18 F. R. 7389, Nov. 21, 1953, effective Nov. 30, 1953.)

18.11-2 *Contacting CAA representative prior to alteration.—(CAA policies which apply to section 18.11).*—Before the following major alterations are undertaken, they should be discussed with a representative of the Administrator who is authorized to approve them.

(a) Major changes to the basic design of the wings or control surfaces.

(b) Changes which may affect the aerodynamic characteristics flight behavior, or control of the aircraft.

(c) Major alterations of any primary structure that require structural substantiation.

(d) Installation of a fuel tank in a wing which was not designed to contain a fuel tank.

(e) Replacing a fabric covering with metal or impregnated glass cloth. (See section 18.30-3 (f) and (g).)

(f) Installation of an engine other than listed in the aircraft specification.

(g) Installation of a propeller model not listed on the pertinent CAA aircraft specification.

(h) Converting from landing gear with tail wheel to a tricycle-type landing gear, such installation not listed on the CAA aircraft specification.

(i) Previously unapproved changes to engine adjustments and settings having an effect on power output, such as changes in carburetor settings and ignition timing.

(j) Changes to air intake, air scoop, carburetor heat valve, or carburetor hot air system which may alter intake air flow, affect fuel metering, or change mixture distribution pattern.

(k) Changes to exhaust system which may increase back pressure and thereby decrease power output or reduce reliability.

(l) Changes reducing strength of powerplant components, such as adding openings in cowl or engine mount structure, cutting down edge distances on mounting flanges, increasing exhaust system overhang on exhaust parts, etc.

(m) Change in location or direction of motion of powerplant controls.

(n) Changes which might adversely influence the aerodynamic effect of the powerplant, such as adding or changing cowl flaps, increasing size of air inlets or outlets, or change in shape of cowling protuberances, etc.

(o) Powerplant changes which result in a change in c. g. range.

(p) Changes affecting cooling of engine, such as baffle changes, addition of holes in cowling and baffle parts, placing of obstructions in air flow path, or restricting air inlet or outlet openings. Exhaust system changes which cause an increase in back pressure usually have an adverse effect on engine cooling.

(q) Changes adversely affecting fuel flow to the engine, such as adding restrictions in the form of fittings, longer or smaller lines, finer mesh screens, or valve substitutions; altering flow characteristics by changes in fuel tank vents or relocation of fuel system components.

(r) Major alterations to radio equipment approved under type certification or the TSO system which are not performed in accordance with a manual, specification, or other data approved by the Administrator, or with

alteration data furnished by the manufacturer of an item under the TSO system.

(18 F. R. 7390, Nov. 21, 1953, effective Nov. 30, 1953; amended in 19 F. R. 4185, July 9, 1954, effective July 15, 1954; amended in 20 F. R. 7535, Oct. 8, 1955, effective Oct. 31, 1955; amended in 22 F. R. 600, Jan. 30, 1957, effective Feb. 20, 1957.)

18.12 *Persons authorized to perform and approve one-hundred-hour, periodic, and progressive inspections.*

(a) *One-hundred-hour inspection.*—No person shall perform and approve 100-hour inspections except one of the following:

(1) Certificated mechanics who together hold airframe and powerplant ratings, or a certificated mechanic holding both such ratings; or

(2) An appropriately rated certificated repair station; or

(3) The manufacturer holding the type certificate for the aircraft and who is operating under an approved production inspection system or production certificate.

(b) *Periodic inspection.*—No person shall perform and approve periodic inspections except one of the following:

(1) A certificated mechanic holding both airframe and powerplant ratings when authorized by the Administrator in accordance with Part 24 of this subchapter; or

(2) An appropriately rated certificated repair station; or

(3) The manufacturer, holding the type certificate for the aircraft and who is operating under an approved production inspection system or production certificate.

(c) *Progressive inspection.*—No person shall perform or supervise and approve progressive inspections except one of the following:

(1) A certificated mechanic holding both airframe and powerplant ratings when authorized by the Administrator in accordance with Part 24 of this subchapter; or

(2) An appropriately rated certificated repair station; or

(3) The manufacturer, holding the type certificate for the aircraft and who is operating under an approved production inspection system or production certificate.

"NOTE: Section 18.12 does not apply to persons engaged in the inspection and maintenance of aircraft operated in accordance with Part 40 or 41 or aircraft of more than 12,500 pounds maximum certificated takeoff weight operated in accordance with the provisions of Part 42 of this subchapter."

(Rev. Part 18, 21 F.R. 4862, June 30, 1956, effective July 17, 1956.)

18.12–1 *Appropriately rated and certificated repair station.—(FAA interpretations which apply to section 18.12).*—An appropriately rated and certificated repair station is a repair station holding either Class Airframe or Limited Airframe ratings appropriate to the make and model of aircraft to be inspected.

(Published in 21 F.R. 3180, May 15, effective July 17, 1956.)

18.13 *Aircraft operating limitations.*

When a repair or an alteration results in any change in the aircraft operating limitations or in the data contained in the approved Aircraft Flight Manual, the aircraft shall not be approved for return to service unless such operating limitations or data are appropriately revised and set forth in accordance with the requirements of section 43.10 of Part 43 of this chapter.

(Rev. Part 18, 21 F.R. 4862, June 30, 1956, effective July 17, 1956; as amended by Amdt. 18-3, 27 F.R. 3003, Mar. 30, 1962, effective May 3, 1962.)

Maintenance, Repair, and Alteration Records

18.20 *Required records and entries.*—A permanent record of every maintenance (excepting preventive maintenance), repair, rebuilding, or alteration of any airframe, powerplant, propeller, or appliance shall be maintained by the owner (or in the case of an aircraft by the registered owner) in a logbook or other permanent record satisfactory to the Administrator, which shall contain at least the information specified in section 18.21. Entries in such records shall be made or caused to be made by the individual, repair station, air carrier, or manufacturer performing the work.

(Rev. Part 18, 21 F.R. 4862, June 30, 1956, effective July 17, 1956.)

18.20–1 *Flight time in aircraft record.—(FAA interpretations which apply to section 18.20).*—A certificated mechanic performing a periodic inspection must make an entry of the

inspection in the aircraft record. Such entry, to be complete, must reflect the flight time or tachometer reading at the time of the inspection.

(Published in 18 F.R., Nov. 21, 1953, effective Nov. 30, 1953.)

18.21 *Content of repair and alteration records.*—The record of all maintenance, repair, rebuilding, and alteration of any airframe, powerplant, propeller, or appliance or the installation or removal of an appliance shall contain the information set forth in paragraphs (a) through (d) of this section:

(a) An adequate description of the work performed,

(b) The date of completion of the work performed,

(c) The name of the individual, repair station, manufacturer, or air carrier performing the work,

(d) The signature, and if a certificated mechanic or certificated repairman the certificate number, of the person approving as airworthy the work performed and authorizing the return of the aircraft or component to service.

(Rev. Part 18, 21 F.R. 4862, June 30, 1955, effective July 17, 1956.)

18.21–1 *Scope of repair and alteration records.—(FAA interpretations which apply to section 18.21 (a)).*—Section 18.21 (a) requires that the repair and alteration records contain an adequate description of the work performed. In lieu of describing in detail the work performed, reference may be made to data previously approved by the Administrator. In all cases, the entry should identify the type of work performed and the component repaired or altered. An example of such an entry could be: "Spliced rear spar, left wing outboard of strut fitting in accordance with figure 2–3 of CAM 18."

The replacement of components, except those described in section 18.1–6 (preventive maintenance), with new, rebuilt or repaired components of similar design is a minor repair. An entry of this replacement should be made in the permanent record referred to in section 18.20. When the component was rebuilt or repaired by a certificated repair station or the manufacturer of the component and installed by another person, the installing agency should include in the description required by paragraph (a) of section 18.21 a statement identifying the repair station or manufacturer performing the work. An example of such an entry would be as follows:

"Installed left landing gear assembly which was rebuilt by Aircraft Services, Repair Station No. 0001. A description of the repair is on file at that agency under job number 386 dated June 1, 1953."

The information to make an entry such as the above example would be obtained from the maintenance release furnished by the repair station or manufacturer repairing the component. The maintenance release is prepared by the repair station or manufacturer in accordance with the procedure set forth in section 18.22–2. The FAA considers such an entry to relieve the person installing the component of responsibility in connection with airworthiness of the repair but not the installation of the component.

(Published in 18 F.R., Nov. 21, 1953, effective Nov. 30, 1953.)

18.22 *Form and disposition of major repair or major alteration records.*—All major repairs and major alterations to an airframe, powerplant, propeller, or appliance shall be entered on a form acceptable to the Administrator. Such form shall be executed in duplicate and shall be disposed of in such manner as, from time to time, may be prescribed by the Administrator.

(Rev. Part 18, 21 F.R. 4862, June 30, 1956, effective July 17, 1956.)

18.22–1 *Procedure for certificated mechanics.—(CAA rules which apply to section 18.22.)*

(a) *Procedure.*—The form and disposition of major repair and major alteration records for repairs or alterations accomplished by certificated mechanics shall be as follows:

(1) Form ACA–337 (Revised Apr. 1952), Major Repair and Alteration Form, shall be used to record all major repairs and major alterations.

(2) The Form ACA–337 shall be executed in accordance with the instructions contained in appendix A.

(3) The Form ACA–337 shall be executed in duplicate. After the repair or alteration has been examined, inspected, and approved or rejected, the original of the Form ACA–337 shall be given to the aircraft owner for retention as part of the permanent record referred to in section 18.20. The copy will be retained by the CAA.

(Published in 18 F. R., Nov. 21, 1953, effective Nov. 30, 1953.)

18.22–2 *Procedure for certificated repair stations and manufacturers.—(CAA rules which apply to section 18.22).*

(a) *Procedure.*—The form and disposition of the major repair and major alteration records for repair and alteration accomplished by certificated repair stations and manufacturers shall be as follows:

(1) *Major alterations.*

(i) All major alterations shall be entered on Form ACA–337, Major Repair and Alteration Form.

(ii) The Form ACA–337 shall be executed in accordance with the instructions contained in appendix A.

(iii) The form shall be executed in duplicate. The altering agency may prepare extra copies for their record; however, it is not mandatory. The original of the Form ACA–337 shall be given the aircraft owner for retention as part of the permanent record referred to in section 18.20. The copy shall be forwarded to the local CAA office within 48 hours of the time the aircraft, airframe, powerplant, propeller, or appliance is approved for return to service.

(2) *Major repairs.*—The Administrator will accept in lieu of Form ACA–337 for major repairs made only in accordance with a manual or specifications approved by the Administrator, the customer's work order upon which repairs are recorded by the repair station or manufacturer. The original copy of the work order shall be furnished the owner or purchaser and the duplicate copy shall be retained at least 2 years by the repair station or manufacturer. The owner of the aircraft shall be furnished an official maintenance release for retention as part of the aircraft permanent record required by section 18.20. Where the repair is made on a component or accessory not yet identified with an aircraft, the release shall remain with the component or accessory until it is installed in an aircraft. At that time, the installing agency will make the maintenance release available to the owner for incorporation in the permanent aircraft record required by section 18.20.

The repair station or manufacturer may use a maintenance release of its own design provided the release incorporates the information set forth in paragraph (i) below and is signed by an authorized representative of the repair station or manufacturer.

(i) *Maintenance release.*—The release [5] shall contain the identity of the aircraft or component. In the case of an aircraft, it will consist of at least the following: make of aircraft, model, serial number, nationality and registration mark, and location of repair. When the repair is to a spare component such as a wing, landing gear, propeller, powerplant, or appliance, the identification will include manufacturer's name, name of component, model and serial number, if any. The following statement shall also be included:

> The aircraft and/or component identified above was repaired and inspected in accordance with current Civil Air Regulations and was found airworthy for return to service.

[5] The maintenance release may be combined with the "customer's work order" to provide one document so long as it contains the required information.

Pertinent details of the repair are on file at this agency under work order No. ___

Date _____

Signed [6] _____ for
(Signature of authorized individual)

_____
(Agency Name) (Certificate No.)

_____
(Address)

(Published in 18 F. R., Nov. 21, 1953, effective Nov. 30, 1953.)

18.23 *Form and disposition of periodic and progressive inspection records.*—A record of periodic and progressive inspections shall be entered on a form prescribed by the Administrator. Such form shall be completed and disposed of in a manner prescribed by the Administrator.

18.23–1 *Aircraft maintenance records.*—(*CAA rules which apply to section 18.23*).

(a) *Periodic inspections.*

(1) The authorized mechanic, repair station or aircraft manufacturer conducting a periodic inspection of an aircraft will complete the franked Form ACA–2350 entitled, "Aircraft Use and Inspection Report," in accordance with the instructions contained in appendix A, and mail the form to the local district office as soon as possible but not later than 48 hours following such inspection.

(2) In the event that a mechanic, repair station, or manufacturer conducting an inspection finds that an aircraft is unairworthy or does not conform with the applicable CAA aircraft specifications, airworthiness directives, or other approved data, the inspecting agency shall provide the aircraft owner or lessee with a signed and dated copy of a list of the discrepancies and forward a similar list with the Form ACA–2350 to the local district office as soon as possible but not later than 48 hours following such inspection.

(b) *Progressive inspections.*

(1) A mechanic, repair station, or manufacturer shall complete and mail the Aircraft Use and Inspection Report form to their local district office after the completion of the first complete inspection of an aircraft which is required at the commencement of a progressive inspection, as soon as possible but not later than 48 hours after such inspection. Thereafter, this form shall also be completed by the inspecting agency and submitted to the district office once each year during the month of January.

(2) When the progressive inspection system for a particular aircraft has been discontinued, the inspecting agency shall notify the local district office thereof by completing an Aircraft Use and Inspection Report form and adding the word "discontinued" (typed or written) over the box preceding "Progressive Inspection" and mailing such form to the district office as soon as possible but not later than 48 hours after the inspection is discontinued.

(Published in 21 F. R. 3181, May 15, 1956, effective July 17, 1956.)

18.24 *Provisions for air carrier records.*—[(a)] Required records and entries may be replaced, in the case of maintenance, repairs, or alterations to appropriately certificated air carrier aircraft, by a suitable system of recording maintenance, repairs, alterations, and signatures of responsible personnel: *Provided*, That the information specified in section 18.21 is furnished.

[(b) The registered owner or operator of air carrier aircraft shall retain records for each such aircraft and its components as follows:

[(1) Retain all records of major structural repairs and major alterations until the aircraft is sold, in which case the records shall be transferred to the new registered owner or operator. In the event that the aircraft is retired, the records shall be retained for one year after the date of cancellation of the registration certificate.

[(2) Retain for at least one year records of all maintenance performed: *Provided*, That, when an approved continuous maintenance system is used, the records of the last complete overhaul cycle for each aircraft and its components must also be retained and be available at all times. In the event that the aircraft and its components is sold, the records shall be transferred to the new registered owner or operator.

[(3) Retain all records of X-rays, and

[6] Only those persons specifically authorized by the repair station or manufacturer management shall be permitted to sign the release.

other special tests specified by the Administrator, which relate to aircraft components designated by the Administrator as critical components until such components are sold, in which case the records shall be transferred to the new owner or user. In the event that such components are retired, such records shall be retained for one year from the date of retirement or the date of cancellation of the registration certificate, if registered.

[The record keeping requirements contained herein have been approved by the Bureau of the Budget.]

Performance Rules

18.30 *Standard of performance; general.*—All maintenance, repairs, and alterations shall be accomplished in accordance with methods, techniques, and practices approved by or acceptable to the Administrator.

(a) *Maintenance and repair.*—All maintenance and repair shall be accomplished in such a manner and the materials used shall be of such quality and strength that the condition of the part of the aircraft on which such work has been performed shall, with regard to aerodynamic and mechanical function, structural strength, resistance to vibration and deterioration, and other qualities affecting airworthiness, be at least equivalent to its original or properly altered condition.

(b) *Alterations.*—All alterations shall be so designed and accomplished that the altered airframe, powerplant, propeller, or appliance will comply with the airworthiness requirements for the airframe, powerplant, propeller, or appliance.

NOTE: The airworthiness requirements applicable to an alteration are normally those with which the manufacturer originally demonstrated compliance for the issuance of a type certificate. The Aircraft Specification includes a reference to that part of the Civil Air Regulations and to the category under which the original type certification was obtained. The individual parts of the airworthiness regulations specify that the provisions in effect on the date of application for approval of the alteration may be made applicable. (See sections 3.11, 4b.11, 5.11, 6.11, 13.11, or 14.11 of this subchapter, whichever part is applicable.) More detailed information on the requirements applicable at the time of type certification can be obtained from the Civil Aeronautics Administration.

(c) *Inspections.*—One-hundred-hour, periodic, and progressive inspections shall be accomplished in accordance with procedures prescribed by the Administrator.

NOTE: The reporting and/or record-keeping requirements contained herein have been approved by the Bureau of the Budget in accordance with the Federal Reports Act of 1942.

18.30–1 *Standard of performance.—(CAA interpretations which apply to section 18.30).*

(a) *General.*—All maintenance, repairs and alterations must be accomplished with the use of such tools, equipment, and test apparatus as are necessary to insure their completion in accordance with good accepted industry practices. Where special equipment or test apparatus is recommended by the manufacturer of the article involved, such equipment or apparatus, or equivalent acceptable to the Administrator must be used.

(b) *Methods, techniques and practices set forth in air carrier manuals for the performance of approved continuous airworthiness maintenance and inspection programs.*—The maintenance manual or applicable maintenance portions of the air carrier manual required by Civil Air Regulations Parts 40, 41, and 42 for the maintenance of air carrier aircraft will, unless the air carrier is otherwise notified by the Administrator, constitute acceptable methods, techniques and practices for the performance of approved continuous airworthiness maintenance and inspection programs.

(Published in 18 F. R., Nov. 21, 1953, effective Nov. 30, 1953.)

18.30–2 *Wood aircraft structures.*[7]*—(CAA policies which apply to section 18.30).*

(a) *Materials.*—Three forms of wood are commonly used in aircraft: solid wood, plywood, and laminated wood. Although several kinds of modified wood are sometimes used for

[7] Complete information on the general design and fabrication of wood aircraft structures may be found in ANC-18, "Design of Wood Aircraft Structures," and ANC-19, "Wood Aircraft Inspection and Fabrication," copies of which may be obtained for $1 and $1.25, respectively, from the Superintendent of Documents, Government Printing Office, Washington 25, D. C.

special purposes, these three forms constitute the bulk of all wood aircraft construction materials.

(1) *Quality of wood.*—All wood and plywood used in the repair of aircraft structures should be of aircraft quality. Table 2–1 lists the permissible variations in characteristics and properties of aircraft wood.

(2) *Species substitution.*—The species used to repair a part should be the same as that of the original whenever possible; however, permissible substitutes are given in table 2–1.

(3) *Effects of shrinkage.*—When the moisture content of a piece of wood is lowered, its dimensions decrease. The dimensional change is greatest in a tangential direction (across the fibers and parallel to the growth rings), somewhat less in a radial direction (across the fibers and perpendicular to the growth rings), and is negligible in a longitudinal direction (parallel to the fibers).

These dimensional changes can have several detrimental effects upon a wood structure such as loosening of fittings and wire bracing, and checking or splitting of wood members.

A few suggestions for minimizing these shrinkage effects are:

(i) Use of bushings that are slightly short so that when the wood member shrinks, the bushings do not protrude and the fittings may be tightened firmly against the member.

(ii) Gradual dropping off of plywood face plates either by feathering or by shaping as shown in figure 2–1.

(4) *Replacement of drain holes and skin stiffeners.*—Whenever repairs are made that require replacing a portion that included drain holes, skin stiffeners, or any other items, the repaired portion should be provided with similar drain holes, skin stiffeners, or items of the same dimensions in the same location. Reinforcing, under skin repairs, that interferes with the flow of water from some source, such as inspection holes, should be provided with drain holes at the lowest points.

(5) *Flutter precautions.*—When repairing control surfaces, especially on high-performance airplanes, care should be exercised that the repairs do not involve the addition of weight aft of the hinge line. Such a procedure may adversely disturb the dynamic and static balance of the surface to a degree which would induce flutter. As a general rule it will be required to repair control surfaces in such a manner that the structure is identical to the original so that the weight distribution and resulting mass balance are not affected in any way.

(6) *Glues and gluing.*—Satisfactory glue joints in aircraft will develop the full strength of wood under all conditions of stress. To produce this result the gluing operation must be carefully controlled so as to obtain a continuous, thin, uniform film of solid glue in the joint with adequate adhesion to both surfaces of the wood. Some of the more important conditions involve:

Properly prepared wood surfaces.
Glue of good quality, properly prepared.
Good gluing technique.

(i) *Preparation of wood surfaces for gluing.*—It is recommended that no more than 8 hours be permitted to elapse between final surfacing and gluing. The gluing surfaces should be machined smooth and true with planers, jointers or special miter saws. Planer marks, chipped or loosened grain, and other surface irregularities should not be permitted. Sandpaper should never be used to smooth soft wood surfaces that are to be glued. Satisfactorily sawed surfaces should approach well-planed surfaces in uniformity, smoothness, and freedom from crushed fibers.

Tooth-planing, or other means of roughening smooth, well-planed surfaces of normal wood before gluing, is not recommended. Such treatment of well-planed wood surfaces may result in local irregularities and objectionable rounding of edges. While sanding of planed surfaces is not recommended for soft woods, sanding is a valuable aid in improving the gluing characteristics of some hard plywood surfaces; wood that has been compressed through exposure to high pressures and temperatures; resin-impregnated wood (impreg and compreg); and laminated paper plastic (papreg).

Wood surfaces for gluing should be free from oil, wax, varnish, shellac, lacquer, enamel, dope, sealers, paint, dust, dirt, oil glue, crayon marks, and other extraneous materials.

Wetting tests are useful as a means of detecting the presence of wax. Drops of water

placed on the surface of wax-coated wood do not spread or wet the wood. At present, preliminary gluing tests appear to be the only positive means of actually determining the gluing characteristics of plywood surfaces.

(ii) *Glues.*—Glues used in aircraft repair fall into two general groups: Casein glues, and resin glues. Any glue that meets the performance requirements of applicable United States Military specifications or has been previously accepted by the CAA, is satisfactory for use in certificated civil aircraft. In all cases glues are to be used strictly in accordance with the glue manufacturers' recommendations.

(*a*) *Casein glues.*—Casein glues are probably more widely used than any of the resin glues in wood aircraft repair work. The forms, characteristics, and properties of water-resistant casein glues have remained substantially the same for many years except for the addition of preservatives. Casein glues for use in aircraft should contain suitable preservatives such as the chlorinated phenols and their sodium salts, to increase their resistance to organic deterioration under high humidity exposures. Most casein glues are sold in powder form ready to be mixed with water at ordinary room temperatures.

(*b*) *Synthetic resin glues.*—Synthetic resin glues for wood are outstanding in that they retain their strength and durability under moist conditions and even after exposure to water. The best-known and most commonly used synthetic resin glues are the phenol-formaldehyde, resorcinol-formaldehyde, and urea-formaldehyde types. Materials, such as walnut-shell flour or wood flour, are often added by the glue manufacturer to the resin glues to give better working characteristics and joint-forming properties. Table 2–2 has been prepared as an aid in the selection of cold-setting synthetic resin glues. It has been derived largely from

the glue manufacturers' directions and instructions, the experience of the users of glues, and such test results as are available. This list is incomplete and subject to change as some brands of glues are discontinued, others modified, and new glues developed and marketed. The inclusion of any glue in this list does not constitute an endorsement on the part of any government agency nor does it assure that it will meet applicable specifications.

[The glues listed in this table are the room temperature setting type. The suitable curing temperatures for both urea-formaldehyde and resorcinol glues are from 70° F. up. At the 70° F. minimum temperature it may take as long as 1 week for the glue line in a spar splice to cure to full strength. Thinner pieces of wood a nd/or higher curing temperatures shorten curing time considerably. The strength of a joint can not be depended upon if assembled and cured at temperatures below 70° F.]

(c) *Mixing of resin glues.*—Liquid resin glues may come ready for use or in a form which requires only the addition of a hardener. In all cases the mixing, glue consistency, assembly time, etc., should comply with the glue manufacturers' recommendations and instructions. Cold-setting, synthetic-resin glues, when prepared for use, are usually sharply limited in working life, and care should be taken to discard the glue and clean the equipment before the end of the working-life period. In very warm weather it may be found advisable to keep the glue pot in a bath of cool water, approximately 70° F., to prolong the working life of the mixture.

(iii) *Gluing technique.*

(a) *Spreading of glue.*—To make a satisfactory glue joint, glue should be spread evenly on both of the surfaces to be joined. It is recommended that a clean brush be used and care take to see that all surfaces are covered. The spreading of glue on but one of the two surfaces is not recommended.

(b) *Assembly time in gluing.*—Where pieces of wood are coated and exposed freely to the air, a much more rapid change in consistency of the glue occurs than where the pieces are laid together as soon as the spreading has been done. The condition of free exposure is conveniently referred to as "open assembly" and the other as "closed assembly."

When cold-setting glues are coated on wood parts and left exposed to the atmosphere (open assembly), the time for complete assembly is appreciably reduced compared with closed assembly periods. Assembly times and gluing pressures should be as recommended by the glue manufacturer.

The pressing time for casein and resin glue joints should, in general, be 7 hours or more. Other types of glue require various times and temperatures for curing. Glue joints increase in strength mainly as a result of drying; hence, where it is convenient to do so, it is better to maintain pressure from one day to the next. The longer pressing periods are desirable, as this enables the joints to reach a higher proportion of their final strength before being disturbed.

(c) *Gluing pressure.*—Pressure is used to squeeze the glue out into a thin continuous film between the wood layers, to force air from the joint, to bring the wood surfaces into intimate contact with the glue, and to hold them in this position during the setting of the glue.

Pressure should be applied to the joint before the glue becomes too thick to flow and is accomplished by means of clamps, presses, or other mechanical devices.

Nonuniform gluing pressure commonly results in weak and strong areas in the same joint. The amount of pressure required to produce strong joints in aircraft assembly operations may vary from 125 to 150 pounds per square inch for softwoods and 150 to 200 pounds per square inch for hardwoods. Insufficient pressure or poorly machined wood surfaces usually result in thick glue lines which indicate a weak joint and should be carefully guarded against.

(d) *Method of applying pressure.*—The methods employed in applying pressure to joints in aircraft gluing operations range from the use of brads, nails, screws, and clamps to the use of hydraulic and electric power presses. Hand nailing is used rather extensively in the gluing of ribs and in the application of plywood skins to the wing, control surfaces, and fuselage frames.

On small joints such as found in wood ribs, the pressure is usually applied only by nailing the joint gussets in place after spread-

ing the glue. Since small nails must be used to avoid splitting, the gussets must be comparatively large in area to compensate for the relative lack of pressure. At least 4 nails per square inch should be used and in no event should nails be more than three-fourths inch apart. Small brass screws may also be used advantageously where the particular parts to be glued are relatively small and do not allow application of pressure by means of clamps. Small brass screws may also be used advantageously where the particular parts to be glued are relatively small and do not allow application of pressure by means of clamps.

Spar splices should always be clamped by means of cabinet-makers' parallel clamps or similar types. Handsprung clamps should be used in conjunction with softwood only. Due to their limited pressure area, they must be applied with a pressure distributing strip or block at least twice as thick as the member to be pressed.

(b) *Scarf joints.*

(1) *General.*—The scarf joint is the most satisfactory method of making a joint in the grain direction between two solid wood members. Both parts should be cut accurately because the strength of the joint depends upon maximum contact between the surfaces being glued.

(2) *Grain direction.*—The scarf cut should be made in the general direction of the grain slope as shown in figure 2–2. (See figure for note concerning allowable deviation from grain direction.)

(c) *Spars.*

(1) *Splicing of spars.*—A spar may be spliced at any point except under wing attachment fittings, landing gear fittings, engine-mount fittings, or lift and interplane strut fittings. These fittings should not overlap any part of the splice. Splicing under minor fittings such as drag wire, antidrag wire or compression strut fittings is acceptable under the following conditions:

The reinforcing plates of the splice should not interfere with the proper attachment or alinement of the fittings. The locations of pulley support brackets, bellcrank support brackets or control surface support brackets should not be altered.

The reinforcing plate may overlap drag or antidrag wire or compression strut fittings if the reinforcing plates are on the front face of the front spar or on the rear face of the rear spar. In such cases it will be necessary to install slightly longer bolts. The inside reinforcing plate should not overlap drag strut fittings unless such overlapping does not require sufficient shortening of compression struts or changes in drag truss geometry to prevent adjustment for proper rigging. Even though takeup is sufficient, it may be necessary to change the angles on the fittings. Splices should be spaced so that they do not overlap. Acceptable methods of splicing the various types of spars are shown in figures 2–3 through 2–6. Reinforcing plates must be used as indicated on all scarf repairs to spars and the slopes of scarfs shown are minimum slopes.

(2) *Splicing of box spar webs.*—The method of splicing plywood webs is shown in figure 2–7. Plywood webs should always be spliced and reinforced with the same type of plywood. Solid wood should never be used to replace plywood webs as plywood is stronger in shear than solid wood of the same thickness due to the variation in grain direction of the individual plies. The face grain of plywood replacement webs and reinforcing plates should be in the same direction as the original member to insure that the new web will have the required strength.

(3) *Replacing solid-type spars with laminated type.*—Solid spruce spars may be replaced with laminated ones or vice versa, provided the material is of the same high quality. External plywood reinforcement should always be replaced with plywood as in the original structure.

(4) *Longitudinal cracks and local damage.*—Cracked spars (except box spars) may be repaired by gluing plates of spruce or plywood of sufficient thickness to develop the longitudinal shear strength of the spar to both sides of it. Such plates should extend well beyond the termination of the cracks as shown in figure 2–8. A method of repairing small local damage to either the top or bottom side of a spar is also shown in this figure.

(i) *Longitudinal cracking of wood wing spars in airplanes operating in arid regions.*—

Airplanes having wood spars and being operated in arid regions may develop longitudinal spar cracks in the vicinity of the plywood reinforcing plates. These cracks result from the tendency of the spar to shrink when drying takes place. Plywood resists this tendency and causes a cross-grain tensile failure in the basic spar. Cracks start under the plywood plates, usually, but not necessarily, at a bolt hole or cut-out and spread in each direction until, in most cases, they extend a short distance beyond the ends of the plates where the resistance to spar shrinkage disappears. Other factors which have been found conducive to the formation of cracks due to spar shrinkage in the region of plywood plates are poor protective finishes, large cutouts, and metal fittings which utilize two lines of large diameter bolts.

The presence of cracks does not necessarily mean that the spar must be discarded. If the crack is not too long or too close to either edge and can be reinforced properly, it will probably be more economical and satisfactory to effect a repair than to install a new spar or section. However, a generally acceptable procedure suitable for all airplane models cannot be described here. In such instances, it is recommended that the manufacturer or the Civil Aeronautics Administration be contacted for specific instructions before making repairs not in accordance with the manufacturer's approved instructions or the recommendations of this manual, because of the possibility of strength deficiencies.

(5) *Elongated holes.*—In cases of elongated bolt holes in a spar or cracks in the vicinity of bolt holes, a new section of spar should be spliced in or the spar replaced entirely, unless the method of repair is specifically approved by a representative of the Civil Aeronautics Administration. In many cases it has been found advantageous to laminate the new section of the spar (using aircraft plywood for the outer faces), particularly if the spar roots are being replaced.

(d) *Ribs.*

(1) *General.*—Complete ribs should be made from a manufacturer's approved drawing or from a drawing made by the repair agency and certified by the manufacturer as correct, except that the original rib may be used as a pattern in making the new rib if it is not too seriously damaged to permit comparison. Wood ribs should not be attached to wood spars by nails driven through the rib cap strips, as this weakens the rib materially. The attachment should be by means of glue, with cement-coated, barbed or spiraled nails driven through the vertical rib members on each side of the spar. The drawing or pattern should be retained by the repair agency for use by the aviation safety agent in making his inspection.

(2) *Repairs of wood structures at a joint, between joints, at trailing edges, or at spars.*—Acceptable methods of repairing damaged ribs are shown in figure 2–9.

(3) *Compression ribs.*—Acceptable methods of repairing damaged compression ribs are shown in figure 2–10. (A) illustrates the repair of a compression rib of the "I" section type, i. e., wide, shallow cap strips, a center plywood web, with a rectangular compression member on each side of the web. The rib is assumed to be cracked through cap strips, web member, and compression member. Cut the compression member as shown in (D), remove, and replace the shortest section, adding the reinforcing blocks as also shown in (D). Cut and replace the aft portion of the cap strips, reinforcing as shown in figure 2–9, except that the reinforcing blocks are split in the vertical direction to straddle the center web. The plywood side plates, as indicated in (A), are glued on. These plates are added to reinforce the damaged web. (B) illustrates a compression rib of the type that is basically a standard rib with rectangular compression members added to one side and a plywood web to the other side. The method used in this repair is essentially the same as in (A) except that the plywood reinforcing plate shown solid black in section B–B is continued the full distance between spars. (C) illustrates a compression rib of the "I" type with a rectangular vertical member each side of the web. The method of repair is essentially the same as in (A) except that the plywood reinforcing plates on each side shown in solid black in section C–C are continued, as in (C), the full distance between spars.

(e) *Plywood skin.*

(1) *General.*—Extensive repairs to damaged stressed skin plywood structures should

be made in accordance with specific recommendations from the manufacturer. It is recommended that repairs be made by replacing the entire panel from one structural member to the next if damage is very extensive. When damaged plywood skin is repaired, the adjacent internal structure should be carefully inspected for possible hidden damage. Any defective frame members should be repaired prior to making skin repairs.

(i) *Types of patches.*—Four types of patches—the surface or overlay patch, the splayed patch, the plug patch, and the scarf patch—are acceptable for repairing plywood skins. Surface patches should not be used on skins over one-eighth-inch thick. Splayed patches should not be used on skins over one-tenth-inch thick. There are no skin thickness limitations for the use of scarf patches and plug patches.

(ii) *Determination of single or double curvature.*—Much of the outside surface of plywood aircraft is curved. On such areas, plywood used for repairs to the skin must be similarly curved. Curved skins are either of single curvature or of double (compound) curvature. A simple test to determine which type of curvature exists may be made by laying a sheet of heavy paper on the surface in question. If the sheet can be made to fit the surface without wrinkling, the surface is either flat or has single curvature. If, however, the sheet cannot be made to fit the surface without wrinkling, the surface is of double curvature.

(iii) *Repairs to single curvature skin.*—Repairs to skins of single curvature may usually be formed from flat plywood, either by bending it dry or after soaking it in hot water. The degree of curvature to which a piece of plywood can be bent will depend upon the direction of the grain and the thickness. Table 2–3 is presented as a guide in determining which process of bending should be used for the curvature being considered.

Plywood after softening may be bent on a cold ventilated form or it may be bent over the leading edge near the part being patched if space permits. In either method it should be allowed to dry completely on the form. When bending plywood over a leading edge, drying may be hastened by laying a piece of coarse burlap over the leading edge before using it as a bending form. A fan to circulate the air over the bent piece will speed the drying. In bending pieces of small radii or to speed up the bending of a large number of parts of the same curvature, it may be necessary to use a heated bending form. The surface temperature of this form may be as high as 149° C. (300° F.), if necessary, without danger of damage to the plywood. The plywood should be left on the form, however, only long enough to dry to room conditions.

(iv) *Repairs to double curvature skin.*—The molded plywood necessary for a repair to a damaged plywood skin of double curvature cannot be made from flat plywood unless the area to be repaired is very small or is of exceedingly slight double curvature; therefore, molded plywood of the proper curvature must be on hand before the repair can be made. If molded plywood of the proper curvature is available, the repair may be made following the recommended procedures.

(2) *Splayed patch.*—Small holes with largest dimensions not over 15 times the skin thickness, in skins not more than one-tenth-inch in thickness, may be repaired by using a circular splayed patch as illustrated in figure 2–11. The term splayed is used to denote that the edges of the patch are tapered but the slope is steeper than is allowed in scarfing operations. The following steps should be taken in making a splayed patch:

(i) Lay out the patch according to figure 2–11. Center the dividers as near to the damage as is possible or tack a small piece of plywood over the hole for a center point and draw two circles, the inner one to be the size of the hole and the outer one marking the limits of the taper. The difference between the radii is 5T (5 times the thickness of the skin). If one leg of the dividers has been sharpened to a chisel edge, the dividers may be used to cut the inner circle completely through.

(ii) Taper the hole evenly to the outer circle with a chisel, knife, or rasp.

(iii) Prepare a circular tapered patch to fit the prepared hole, and glue the patch into place with face grain direction matching that of the original surface.

(iv) Use waxed paper between the patch

and a plywood pressure plate cut to the exact size of the patch. This prevents extruded glue from binding patch and plate together. Center the plate carefully over the patch.

(v) Apply pressure.—As there is no reinforcing behind this patch, care must be used so that pressure is not great enough to crack the skin. On horizontal surfaces, weights or sandbags will be sufficient. On vertical surfaces apply hand clamps lightly but snugly. On patches too far in for the use of standard hand clamps, jaws of greater length may be improvised.

(vi) Fill, sand, and refinish the patch.

(3) *Surface patch.*—Plywood skins that are damaged between or along framing members may be repaired by surface of overlay patches as shown in figure 2–13. The damaged skin should be trimmed to a rectangular or triangular shape and the corners rounded. The radius of rounded corners should be at least five times the skin thickness. Surface patches should be covered with fabric before finishing. Fabric should overlap the original skin at least 2 inches. Surface patches located entirely aft of the 10 percent chord line or which wrap around the leading edge and terminate aft of the 10 percent chord line are permissible. Patches located entirely aft of the 10 percent chord line should have their forward edges beveled to 4 times the skin thickness. Surface patches may have as much as a 50-inch perimeter and may cover as much as 1 frame (or rib) space. The face grain direction should be the same as the original skin.

(4) *Scarf patch.*

(i) *General.*—A properly prepared and inserted scarf patch is the best repair for damaged plywood skins. It is the preferred type for most skin repairs. Figure 2–14 shows the details and dimensions to be used when installing typical scarf skin patches when the back of the skin is accessible. Figure 2–15 should be followed when the back of the skin is not accessible. The scarf slope of 1 in 12 shown in both figures is the steepest slope permitted for all species of plywood. If the radius of curvature of the skin at all points on the trimmed opening is greater than 100 times the skin thickness, a scarf patch may be installed.

Scarf cuts in plywood may be made by hand plane, spoke shave, scraper or accurate sandpaper block. Rasped surfaces, except at the corners of scarf patches, and sawed surfaces are not recommended as they are likely to be rough or inaccurate.

Nail strip gluing is often the only method available for gluing scarf joints in plywood when used in repair work; therefore it is essential that all scarf joints in plywood be backed with plywood or solid wood to provide adequate nail-holding capacity. The face grain direction of the plywood patch should be the same as that of the original skin.

(ii) *Scarf patches (back of skin accessible).*—When the back of a damaged plywood skin is accessible (such as a fuselage skin), it should be repaired with scarf patches following the details shown in figure 2–14. Whenever possible the edge of the patch should be supported as shown in section C—C. When the damage follows or extends to a framing member, however, the scarf may be supported as shown in section B—B.

Damages that do not exceed 25 times the skin thickness in diameter after being trimmed to a circular shape, and if the trimmed opening is not nearer than 15 times the skin thickness to a framing member, may be repaired as shown in figure 2–14, section D—D. The backing block is especially shaped from solid wood and fitted to the inside surface of the skin, and is temporarily held in place with nails. A hole, the exact size of the inside circle of the scarf patch, is made in the block and is centered over the trimmed area of damage. The block is removed after the glue on the patch has set, and leaves a flush surface to the repaired skin.

(iii) *Steps in making scarf patch (back of skin not accessible).*

(*a*) After removing damaged sections, install backing strips, as shown in figure 2–15, along all edges that are not fully backed by a rib or a spar. To prevent warping of the skin, backing strips should be made of a soft-textured plywood, such as yellow poplar or spruce, rather than solid wood. All junctions between backing strips and ribs or spars should have the end of the backing strip supported by a saddle gusset of plywood.

(*b*) If needed, nail and glue new gusset plate to rib. It may be necessary to remove and

replace the old gusset plate by a new saddle gusset or it may be necessary to nail a saddle gusset over the original.

(*c*) Attach nailing strips to hold backing strips in place while the glue sets. Use bucking bar where necessary to provide support for nailing. Unlike the smaller patches made in a continuous process, work on the airplane must wait while the glue holding the backing strips sets. After setting, complete finishing in usual manner.

(5) *Plug patches.*

(i) *General.*—Two types of plug patches, oval and round, may be used on plywood skins provided the damage can be covered by the patches whose dimensions are given in figures 2–12 and 2–16. As the plug patch is strictly a skin repair it should be used only for damage that does not involve the supporting structure under the skin. Oval patches must be prepared with the face grain carefully oriented to the same direction as the original skin. Orientation of the face grain direction of the round plug patch to that of the skin surface is no problem, as the round patch may be rotated until grain directions match.

(ii) *Steps in making oval plug patch.*

(*a*) Explore the area about the hole to be sure it lies at least the width of the oval doubler from a rib or a spar. Refer to figure 2–12 for repair details.

(*b*) Lay a previously prepared oval plug patch over the damage and trace the patch. Saw to the line and trim the hole edges with a knife and sandpaper.

(*c*) Mark the exact size of the patch on one surface of the oval doubler and apply glue to the area outside the line. The oval doubler should be made of some soft-textured plywood, such as yellow poplar or spruce. Insert doubler through the hole and bring it, glue side up, to the underside of the skin with its pencil outline of the patch matching the edges of the hole. If the curvature of the surface to be repaired is greater than a rise of one-eighth inch in 6 inches, the doubler should be preformed, by hot water or steam bending, to the approximate curvature.

(*d*) Apply nailing strips, outlining the hole, to apply glue pressure between doubler and skin. Use bucking bar to provide support for nailing. When two rows of nails are used, stagger nail spacing.

(*e*) Apply glue to remaining surface and to an equivalent surface on the patch.

(*f*) Lay the patch in position over the doubler and screw the pressure plate to the patch assembly using a small nail to line up the holes that have been previously made with patch and plate matching. No. 4 round-head screws are used. Lead holes in the plywood doubler are not necessary. Waxed paper or cellophane between the plate and patch prevents glue from sealing the plate to the patch. No clamps or further pressure need be applied as the nailing strips and screws exert ample pressure. Hot sandbags, however, may be laid over the patch to speed the setting of the glue. Finish in the usual manner.

(iii) *Round plug patch.*—The steps in making a round plug patch shown in figure 2–16 are identical with those for making the oval patch except the insertion of the doubler. In using the round patch, where access is from only one side, the round doubler cannot be inserted unless it has been split.

(6) *Fabric patch.*—Small holes not exceeding 1 inch in diameter, after being trimmed to a smooth outline, may be repaired by doping a fabric patch on the outside of the plywood skin. The edges of the trimmed hole should first be sealed, and the fabric patch should overlap the plywood skin by at least 1 inch. Holes nearer than 1 inch to any frame member or in the leading edge, or frontal area of the fuselage should not be repaired with fabric patches.

(f) *Finishing structural repairs.*—(1) *General.*—Any repair to spars, ribs, skin surfaces, or other structural parts of the airframe involves finishing as the final step in the job.

(2) *Precautions to be observed.*—(i) When making repairs, avoid excessive contamination of surfaces with glue squeeze-out at joints and on all surfaces. Excess glue should always be removed before applying finish. Because paints and glues are incompatible, even a slight amount of glue underneath the finish may cause premature deterioration.

(ii) Soiling substances, such as oil and grease, should be removed as completely as possible. Naphtha may be used to sponge off oil and grease. Markings that are made by grease

pencils or lumber crayons containing wax are harmful and should be removed, but marks made by ordinary soft graphite pencils and nonblotting stamp-pad inks may be safely finished over. All dust, sander dust, dirt, and other solid particles should be cleaned off.

(iii) Sawdust, shavings, and chips should be removed from enclosed spaces before they are sealed off by replacement of skin. A vacuum cleaner is useful for such cleaning.

(iv) Since no satisfactory gluable sealer has yet been developed, it is necessary to avoid applying sealer over the areas where glue will be applied. Areas to receive glue should be marked off with pencil, allowing an additional one-fourth inch on each side of the glue area to provide for misalinement when mating the parts. It is preferable to leave some unsealed areas rather than risk weakening the glue joint by accidental overlap of the sealer into the glued areas.

(v) Finish is likely to crack when applied over flush-driven nails and screws. To avoid this a strip of tape may be applied over the heads after application of sealer and before the final finish is applied.

(vi) Fill all holes left from nail-strip gluing or countersunk nails and screws with a wood filler before finishing the surface. It may be necessary to cover with a patching putty the slight depressions left after applying filler if a completely smooth surface is desired, but as a rule patching putty may be dispensed with safety.

(vii) Surfaces which are likely to come in contact with fabric during the doping process should be treated with a dope-proof paint, cellophane tape, etc., to protect them against the action of the solvents in the dope.

(3) *Finishing of interior surfaces.*—Repaired ribs, spars, interior of plywood skin, and other internal members, including areas of contact between metal and wood, should be finished by applying at least two coats of spar varnish. Built-up box spars and similar closed structures should be protected on the interior by at least one heavy coat of spar varnish or lionoil. Where better protection is required, as on the surfaces of wheel wells and the bottoms of hulls below the floor boards, an additional coat of aluminized sealer consisting of 12 to 16 ounces of aluminum paste per gallon of sealer may be applied.

(4) *Finishing of exterior surfaces.*—Exterior surfaces should first be sealed with at least two coats of sealer or spar varnish. The surface finish should then be completed by the application of enamel, aluminized varnish or other special finish as required to duplicate the original finish. If dope or lacquer is used to complete the finish, the sealer coats should be dope-proof. Spar varnish or sealer conforming to Specification MIL–V–6894 is satisfactory.

(5) *Finishing of end-grain surfaces.*—End-grain surfaces, such as edges of plywood skins and holes in spars and other primary structural members, require careful protection. Sand these surfaces smooth. Apply two coats of a highly pigmented sealer, or 1 coat of wood filler, and 1 coat of clear sealer to end-grain interior surfaces and cut holes. Exterior end-grain surfaces (except those covered with doped fabric) require an additional (third) coat of clear sealer. A final coat of aluminized varnish may be applied to end-grain surfaces. If the surfaces are to be finished with dope or lacquer, a dope-proof sealer similar to Specification MIL–V–6894 should be used.

Exposed end-grain includes such surfaces as those around vent holes, inspection holes and fittings, and exposed scarfed or tapered surfaces such as those of tapered blocking.

(6) *Finishing with fabric or tape.*

(i) To refinish with fabric or tape, it is first necessary to insure that paint has been removed from an area greater than that to be covered by the fabric.

(ii) Apply 2 brush coats of a dope-proof sealer similar to Specification MIL–V–6894, allowing the first coat to dry 2 hours and the second coat at least 6 hours. Follow with 1 coat of clear dope, and allow it to dry 45 minutes. Apply a second coat of clear dope and lay into the wet film a piece of pinked-edge airplane cloth. All air bubbles should be worked out by brushing to insure maximum adherence. Allow this to dry 45 minutes. Apply 1 brush coat to insure proper penetration and at least 1 spray coat of clear dope, allowing each to dry 45 minutes. The dried spray coat may be scuffed with fine sandpaper to obtain a smoother finish. Complete the refinishing of the surface

by application of lacquer, enamel, or aluminized varnish as required to match the adjacent area.

(iii) The size of the fabric patch should be such as to extend at least one-half-inch on each side of any crack or group of cracks, at least 1 inch on each side of a scarfed joint glue line, and at least 2 inches beyond any edge of a skin patch, to insure proper adhesion.

(18 F. R. 7392, Nov. 21, 1953, effective Nov. 30, 1953, amended 22 F. R. 600, Jan. 30, 1957, effective Feb. 20, 1957.)

18.30–3 *Fabric covering.*—(*CAA policies which apply to section 18.30*).

(a) *Textile materials.*—All fabric, surface tape, reinforcing tape, machine thread, lacing cord, etc., used for re-covering or repairing an aircraft structure should be of high-grade aircraft textile material of at least as good quality and equivalent strength as those described in subparagraphs (1) through (7).

(1) *Aircraft fabric.*—Acceptable fabric such as cotton and linen for covering wings, control surfaces, and fuselages are listed in table 3–1. Fabrics conforming to the Automotive Material Specifications incorporate a continuous marking showing the specification number to permit identification of the fabric in the field. (See section 18.30–8 (e).)

(2) *Re-covering aircraft with original type fabric.*—Aircraft should be re-covered or repaired with fabric of at least as good quality and equivalent strength as that originally used on the aircraft. In re-covering aircraft which were originally covered with low strength or "so called" glider cloth, however, it is considered more desirable to use Grade A or intermediate fabric conforming to AMS 3806 or 3804, as amended, respectively.

(3) *Reinforcing tape.*—Acceptable reinforcing tape is listed in table 3–2. Reinforcing tape should be of similar quality to the fabric and at least one-half the strength of that conforming to specification MIL–T–5661.

(4) *Surface tape.*—Surface tape (also finishing tape) should have approximately the same properties as the fabric used. See table 3–2.

(5) *Lacing cord.*—Lacing cord should have the strength of at least 80 pounds double or 40 pounds single strand. Acceptable lacing cord is listed in table 3–2.

(6) *Mcchine thread.*—Machine thread should have a strength of at least 5 pounds single strand (table 3–2).

(7) *Hand-sewing thread.* — Hand-sewing thread should have a strength of at least 14 pounds single strand (table 3–2).

(b) *Covering practices.*—(1) *General.*—The method of fabric attachment should be identical, as far as strength and reliability are concerned, to the method used by the manufacturer of the airplane to be re-covered or repaired. Fabric may be applied so that either the warp or fill threads are parallel to the line of flight. Either the envelope method or blanket method of covering is acceptable. (See section 18.30–3 (b) (5).)

(2) *Flutter precautions.*—When repairing control surfaces, especially on high-performance airplanes, care should be exercised that the repairs do not involve the addition of weight aft of the hinge line. Such a procedure may adversely disturb the dynamic and static balance of the surface to a degree which would induce flutter. As a general rule, it will be required to repair control surfaces in such a manner that the structure is identical to the original so that the weight distribution and mass balance are not affected.

(3) *Preparation of the structure for covering.*—One of the most important items in covering aircraft is proper preparation of the structure. Dope-proofing, covering edges which are likely to wear the fabric, preparation of plywood surfaces and similar operations, if properly done, will do much toward insuring an attractive and long-lasting job.

(i) *Dope-proofing.*—Treat all parts of the structure which come in contact with doped fabric with a protective coating such as aluminum foil, dope-proof paint or cellulose tape. Clad aluminum and stainless steel parts need not be dope-proofed.

(ii) *Chafe points.*—All points of the structure such as sharp edges, bolt heads, etc., which are likely to chafe or wear the covering should be covered with doped-on fabric strips or covered with an adhesive tape. After the cover has been installed, the chafe points of the fabric should be reinforced by doping of fabric patches. Where a stronger reinforcement is required, a cotton duck or leather patch should be sewed to the fabric patch and then doped in place. All portions of the fabric pierced by

wires, bolts, or other projections should be reinforced.

(iii) *Inter-rib bracing.*—Conventional wing ribs, which do not have permanent inter-rib bracing, should be tied in position by means of cotton tape running parallel to the beams. Apply the tape bracing to both the top and bottom capstrips, maintained parallel to the plane of the cover rather than diagonally between the top and bottom capstrips. Apply the tape continuously with one turn around successive capstrips, arranged so that the tape between the ribs is separated from the cover by a distance equal to the depth of the capstrip. Tie the turn of tape around each capstrip by means of a short length of lacing cord.

(iv) *Preparation of plywood surfaces for covering.*—Prior to covering plywood surfaces with fabric, prepare the surface by cleaning and applying sealer and dope.

(*a*) *Cleaning.*—Sand all surface areas which have been smeared with glue in order to expose a clean wood surface. Remove loose deposits such as wood chips and sawdust. Remove oil or grease spots by carefully washing with naphtha.

(*b*) *Application of sealer and dope.*—Apply one brush coat or two dip coats (wiped) of a dope-proof sealer such as that conforming to Specification MIL–V–6894 thinned to 30 percent nonvolatile content and allow to dry 2 to 4 hours. Finally, before covering, apply two brush coats of clear dope allowing the first coat of dope to dry approximately 45 minutes before applying the second coat.

(4) *Seams.*—(i) *Location of seams.*—Seams parallel to the line of flight are preferable; however, spanwise seams are acceptable.

(ii) *Sewed seams.*

(*a*) Machine-sewed seams (parts D, E, and F of figure 3–1) should be of the folded-fell or French-fell types. Where selvage edges or pinked edges are joined, a plain lap seam is satisfactory.

(*b*) Hand-sewing or tacking should begin at the point where machine-sewing stops and should continue to the point where machine-sewing or uncut fabric is again reached. Hand-sewing should be locked at intervals of 6 inches, and the seams should be properly finished with a lock stitch and a knot (fig. 3–5). At the point where the hand sewing or permanent tacking is necessary, the fabric should be so cut that it can be doubled under before sewing or permanent tacking is performed (fig. 3–1C). After hand-sewing has been completed, the temporary tacks should be removed. In hand-sewing there should be a minimum of four stitches per inch.

(*c*) A sewed spanwise seam on a metal or wood-covered leading edge should be covered with pinked-edge surface tape at least 4 inches wide.

(*d*) A sewed spanwise seam at the trailing edge should be covered with pinked-edge surface tape at least 3 inches wide. Notches at least 1 inch in depth and 1 inch in width should be cut into both edges of surface tape if it is used to cover spanwise seams on trailing edges especially the trailing edges of control surfaces. The notches should be spaced at intervals not exceeding 6 inches. On tape less than 3 inches wide, the notches should be one-third the tape width. In the event that the surface tape begins to separate because of poor adhesion or other causes, the tape will tear at a notched section thus preventing progressive loosening of the entire length of tape.

(*e*) A double stitched lap joint should be covered with pinked edge surface tape at least 4 inches wide.

(*f*) Sewed spanwise seams on the upper or lower surface should be made in a manner that the amount of protuberance is a minimum. The seam should be covered with pinked edge tape at least 3 inches wide.

(*g*) Sewed seams parallel to the line of flight (chordwise) should not be placed over a rib or be so placed that the lacing will be through or across such a seam.

(iii) *Doped seams.*

(*a*) A lapped and doped spanwise seam on a metal or wood-covered leading edge should be lapped at least 4 inches and covered with pinked edge surface tape at least 8 inches wide.

(*b*) A lapped and doped spanwise seam at the trailing edge should be lapped at least 4 inches and covered with pinked edge surface tape at least 3 inches wide. It should be notched at intervals not exceeding 6 inches.

(Ref. section 18.30–3 (b) (4) (ii) (*d*) for notch configuration.)

(5) *Covering methods.*

(i) *The envelope method.*—The envelope method of covering is accomplished by sewing together widths of fabric cut to specified dimensions and machine-sewn to form an envelope which can be drawn over the frame. The trailing and outer edges of the covering should be machine sewn unless the component is not favorably shaped for sewing, in which case the fabric should be joined by hand sewing.

(ii) *The blanket method.*—The blanket method of covering is accomplished by sewing together widths of fabrics of sufficient lengths to form a blanket over the surfaces of the frame. The trailing and outer edges of the covering should be joined by a plain overthrow or baseball stitch. For airplanes with placard never-exceed speed of 150 miles per hour or less, the blanket may be lapped at least 1 inch and doped to the frame or the blanket, lapped at least 4 inches at the nose of metal or wood-covered leading edges, doped, and finished with pinked-edge surface tape at least 8 inches wide. In fabricating both the envelope and blanket coverings, the fabric should be cut in lengths sufficient to pass completely around the frame, starting at the trailing edge and returning to the trailing edge.

(6) *Reinforcing tape.*—Reinforcing tape of at least the width of the capstrips should be placed under all lacing. In the case of wings with plywood or metal leading-edge covering, the reinforcing tape need be brought only to the front spar on the upper and lower surfaces.

(i) *Use of antitear strips.*—On aircraft with never-exceed speed in excess of 250 miles per hour, antitear strips are recommended under reinforcing tape on the upper surface of wings, and the bottom surface of that part of the wing in the slipstream. Where the antitear strip is used on both the top and bottom surfaces, pass it continuously up to and around the leading edges and back to the trailing edge. Where the strip is used only on the top surface, carry it up to and around the leading edge and back on the lower surface as far aft as the front beam. For this purpose the slipstream should be considered as being equal to the propeller diameter plus one extra rib space on each side. Cut antitear strips from the same material as used for covering and wide enough to extend beyond the reinforcing tape on each side so as to engage the lacing cord. Attach the strips by applying dope to that part of the fabric to be covered by the strip and applying dope freely over the strip.

(7) *Lacing.*

(i) *Wing lacing.*—Both surfaces of fabric covering on wings and control surfaces should be securely fastened to the ribs by lacing cord or any other method originally approved for the aircraft. Care should be taken to insure that all sharp edges against which the lacing cord may bear are protected by tape in order to prevent abrasion of the cord. Separate lengths of lacing cord should be joined by the splice knot shown in figure 3–4. The common square knot, which has a very low slippage resistance, should not be used for this purpose. The utmost care should be exercised to assure uniform tension and security of all stitches. The first or starting stitch should be made with a double loop by the method illustrated in figure 3–6. All subsequent stitches should be made with a single loop and tied off with the standard knot for rib lacing (modified seine type), shown in figure 3–5. The spacing between the starting stitch and the next stitch should be one-half the normal stitch spacing. All tie-off knots should be placed on the middle of the reinforcing tape on the bottom surface, or along the edge of the lower capstrip. The seine knot admits a possibility of improper tightening, resulting in a false (slip) form with greatly reduced efficiency and should not be used for stitch tie-offs. The tie-off knot for the last stitch should be locked by an additional half-hitch. Where stitching ends, as at the rear beam and at the trailing edge, the last two stitches should be spaced at one-half normal spacing. Under no circumstances should tie-off knots be pulled back through the lacing holes.

(ii) *Double-loop lacing.*—The double-loop lacing illustrated in figure 3–7 represents a method for obtaining higher strengths than possible with the standard single lacing. When using the double-loop lacing, the tie-off knot should be made by the method shown in figure 3–8.

(iii) *Fuselage lacing.*—Fabric lacing is

also necessary in the case of deep fuselages, and on fuselages where former strips and ribs shape the fabric to a curvature. In the latter case the fabric should be laced at intervals to the formers. The attachment of the fabric to fuselages should be so accomplished as to be at least the equivalent in strength and reliability to that used by the manufacturer of the airplane.

(8) *Stitch spacing.*—The stitch spacing should not exceed the spacing approved on the original aircraft. In case the spacing cannot be ascertained due to destruction of the covering, acceptable rib-stitch spacing may be found in figure 3–2. The lacing holes should be placed as near to the capstrip as possible in order to minimize the tendency of the cord to tear the fabric. All lacing cord should be lightly waxed with beeswax for protection. In case waxed braided cord is used, this procedure is unnecessary. (See table 3–2 for acceptable lacing cords.)

(9) *Surface tape. (Finishing tape).*—All lacing should be covered with tape of at least the quality and width as was used on the original airplane. This tape should not be applied until the first coat of dope has dried. All inspection openings should be reincorporated into the covering, and the fabric around them and along leading edges reinforced with tape. Where wear or friction is induced by moving parts or fittings, a leather patch should be sewed to a fabric patch and doped in place. Pinked surface tape is sometimes applied over the trailing edges of control surfaces and airfoils. For such application the tape should be at least 3 inches in width and should be notched along both edges at intervals not exceeding 6 inches. (See section 18.30–3 (b) (4) (ii) (*d*) for notch configuration.) If separation of the tape from the trailing edge begins it will tear at a notched section and thereby prevent loosening of the entire strip.

(10) *Special fasteners.*—When repairs are made to fabric surfaces attached by special mechanical methods, the original type of fastening should be duplicated.

When self-tapping screws are used for the attachment of fabric to the rib structure, the following procedure should be observed:

(i) The holes should be redrilled where found necessary due to wear, distortion, etc., and in such cases a screw one size larger should be used as a replacement.

(ii) The length of the screw should be sufficient so that at least two threads of the grip (threaded part) extend beyond the rib capstrip.

(iii) A thin washer, preferably celluloid, should be used under the heads of screws and pinked-edge tape should be doped over each screw head.

(c) *Doping.*

(1) *Thinning of dopes.*—Dopes are generally supplied at a consistency ready for brush coats. For spraying operations practically all dopes require thinning. Thinning directions are usually listed on the container label. Where thinning operations are not supplied, thin the dope with a thinner made for the type of dope being used, until suitable brushing and/or spraying properties are obtained. The amount of thinner to be used will depend on the dope, atmospheric conditions, the spraying equipment, the spraying technique of the operator, and the type of thinner employed. The thinning of dopes influences the drying time and tautening properties of the finish and it is necessary that it be done properly. Determine the amount of thinner necessary by using experimental panels in order to ascertain the conditions which prevail locally at the time of application of the dope.

(2) *Blushing and use of blush-retarding thinner.*—Blushing of dopes is very common when doping is accomplished under humid conditions. The condition is caused by the rapid evaporation of thinners and solvents, which lowers the temperature on the surface, causing condensation of moisture and producing the white appearance known as blush. Blushing tendencies are also increased if strong currents of air flow over the surface when applying dopes or immediately thereafter.

A blushed finish has very little protective or tautening value. Where the relative humidity is such that only a small amount of blushing is encountered in doping, this condition may be eliminated by thinning the dope with a blush-retarding thinner and slightly increasing the room temperature. If it is not possible to correct humidity conditions in the dope room, suspend doping operations until more favorable atmospheric conditions prevail. The

use of a large amount of blush-retarding thinner is not advisable because of the undesirable drying properties accompanying the use of this material.

(3) *Number of coats.*—The total number of coats of dope should not be less than that necessary to result in a taut and well-filled finish job. A guide for finishing fabric-covered aircraft follows:

(i) Two coats of clear dope, brushed on and sanded after the second coat.

(ii) One coat of clear dope, either brushed or sprayed, and sanded.

(iii) Two coats of aluminum pigmented dope, sanded after each coat.

(iv) Three coats of pigmented dope (the color desired), sanded and rubbed to give a smooth glossy finish when completed.

(v) Care should be taken not to sand heavily over the center portion of pinked tape and over spars in order not to damage the rib-stitching cords and fabric.

(4) *Technique.*—Apply the first two coats of dope by brush and spread on the surface as uniformly as possible and thoroughly work into the fabric. Exercise care not to work the dope through the fabric so that an excessive film is formed on the reverse side. The first coat should produce a thorough and uniform wetting of the fabric. To do so, work the dope with the warp and the filler threads for three or four brush strokes and stroke away any excess material to avoid piling up or dripping. Apply succeeding brush or spray coats with only sufficient brushing to spread the dope smoothly and evenly.

When doping fabric over plywood or metal-covered leading edges, care should be taken to insure that an adequate bond is obtained between the fabric and the leading edge. Care should also be taken when using predoped fabric to use a thinned dope in order to obtain a good bond between the fabric and the leading edge.

(5) *Applying surface tape and reinforcing patches.*—Apply surface tape and reinforcing patches with the second coat of dope. Apply surface tape over all rib lacing and over all sewed seams as well as at all other points of the structure where tape reinforcements are indicated.

(6) *Installation of drainage grommets.*—With the second coat of dope, install drainage grommets on the underside of airfoils at the trailing edge and as close to the rib as practicable. On fuselages, install drainage grommets at the center of the underside in each fuselage bay, located so that the best possible drainage is effected. On seaplanes it is recommended to install special shielded grommets, sometimes called marine grommets, to prevent the entry of spray. Also use this type of grommet on landplanes in that part of the structure which is subject to splash from the landing gear when operating from wet and muddy fields. Plastic-type grommets are doped directly to the covering. Where brass grommets are used, mount them on fabric patches and then dope to the covering. After the doping scheme is completed, open the drain holes by cutting out the fabric with a small-bladed knife. Do not open drainage grommets by punching.

(7) *Use of fungicidal dopes.*—Fungicidal dope is normally used as the first coat for fabrics to prevent rotting. While it may be more advisable to purchase dope in which the fungicide has already been incorporated, it is feasible to mix the fungicide with the dope. Specification MIL–D–7850 specifies that the requirements for cellulose acetate butyrate dope incorporate a fungicide for first coat use on aircraft. The fungicide specified in this specification is zinc dimethyldithiocarbonate which forms a suspension with the dope. This material is a fine powder, and if it is mixed with the dope, it should be made into a paste using dope and then diluted to the proper consistency according to the manufacturer's instructions. It is not practicable to mix the powder with a large quantity of dope.

Copper napthonate is also used as a fungicide and forms a solution with dope. However, this material has a tendency to bleed out especially on light-colored fabric. It is considered satisfactory from a fungicidal standpoint.

The first coat of fungicidal dope should be applied extremely thin so that the dope can thoroughly saturate both sides of the fabric. Once the fabric is thoroughly saturated subsequent coats can be applied at any satisfactory working consistency.

(8) *Rejuvenation of fabric.*—When using

this technique of improving the appearance or condition of the doped surface, care should be exercised to establish *initially* that the fabric strength itself has not deteriorated beyond safe limits. Experience indicates that rejuvenation may at times cause fabric sag rather than tautening.

(9) *Common dope troubles.*

(i) In cold weather, dopes become quite viscous. Cold dopes pull and rope under the brush, and if thinned sufficiently to spray, lack body when dry. Prior to use, allow dopes to come to a temperature approximately that of the dope room, 24° C. (75° F.).

(ii) Orange peel and pebble effect result from insufficiently thinned dope or when the spray gun is held too far from the surface being sprayed.

(iii) Runs, sags, laps, streaks, high and low spots are caused by improperly adjusted spraying equipment or improper spraying technique.

(iv) Blisters may be caused by water or oil entering the spray gun. Drain air compressors, air regulators, and air lines daily.

(v) Pin holes may be caused by not allowing sufficient time for drying between coats or after water sanding, or they may be due to insufficiently reduced dope.

(vi) Wet areas on a doped surface indicate that oil, grease, soap, etc., had not been properly removed before doping.

(d) *Repairs to fabric covering.*—Repairs to fabric-covered surfaces should be made in a manner that will return the original strength and tautness to the fabric. Sewed repairs and unsewed (doped-on patches or panels) may be made. No fabric or tape should be doped onto a surface which contains aluminum or other color coats. Whenever it is necessary to add fabric reinforcement, the old dope should be removed either by softening and scraping or by sanding down to the point where the base coat or clear coat is exposed. Clear dope should be used in doping the fabric to the surface. After reinforcement is made, normal finishing procedures may be followed.

(1) *Repair of tears in fabric.*—Tears should be repaired as shown in figure 3–3 by sewing the torn edges together using a baseball stitch and doping a piece of pinked-edge fabric over the tear. If the tear is a straight rip, the sewing is started at one end so that as the seam is made the edges will be drawn tightly together throughout its entire length. If the opening is V-shaped, as is often the case when openings are cut in wings to inspect the internal structure, the sewing should start at the corner or point so that the edges of the cover will be held in place while the seams are being made. The sewing is done with a curved needle and well-waxed thread. Clean the surface to be covered by the patch by rubbing the surface with a rag dipped in dope and wiping dry with a clean rag, or by scraping the surface with a putty knife after it has been softened with fresh dope. Dope solvent or acetone may be used for the same purpose but care should be taken that it does not drop through on the inside of the opposite surface causing the dope to blister. A patch of sufficient size should be cut from airplane cloth to cover the tear and extend at least 1½ inches beyond the tear in all directions. The edges of the patch should either be pinked similar to surface tape or frayed out about one-fourth inch on all edges.

(2) *Sewed patch repair.*—When the damage is such that it will not permit sewing the edges together, a sewed-in repair patch may be used if the damage is not longer than 16 inches in any one direction (see fig. 3–3). Cut out the damaged section making a round or oval-shaped opening trimmed to a smooth contour. Clean the area of the old fabric to be doped as indicated in section 18.30–3 (d) (1). Turn the edges of the patch one-half inch and sew to the edges of the opening. Before sewing, fasten the patch at several points with a few temporary stitches to facilitate sewing the seams. After the sewing is completed, clean the area of the old fabric to be doped as indicated for small repairs and then dope the patch in the regular manner. Apply surface tape over the seams with the second coat of dope. If the opening extends over or closer than 1 inch to a rib or other laced member, the patch should be cut to extend 3 inches beyond the member. After sewing has been completed the patch should be laced to the rib over a new section of reinforcing tape using the methods of section 18.30–3 (b) (7) (i). The old rib lacing and reinforcing tape should not be removed.

414269 O - 57 - 4

(3) *Repair by sewing in repair panel.*—When the damaged area exceeds 16 inches in any direction a new panel should be installed.

(i) Remove the surface tape from the ribs adjacent to the damaged area and from the trailing and leading edges of the section being repaired. Leave the old reinforcing tape in place.

(ii) Cut the old fabric along a line approximately 1 inch from the center of the ribs on the sides nearest to the injury, and continue the cuts to completely remove the damaged section. The old fabric should not be removed from the leading and trailing edge unless both upper and lower surfaces are being re-covered. Do not remove the reinforcing tape and lacing at the ribs.

(iii) Cut a patch to extend from the trailing edge up to and around the leading edge and back approximately to the front beam. The patch should extend approximately 3 inches beyond the ribs adjacent to the damage.

(iv) Clean the area of the old fabric to be covered by the patch, put the patch in place, stretch taut and pin. After the patch is pinned in place, fold under the trailing and leading edges of the patch one-half inch and sew to the old fabric. Fold the side edges under one-half inch and sew to the old cover. After completion of the sewing, place reinforcing tape over the ribs under moderate tension and lace down using the methods of section 18.30–3 (b) (7) (i). Remove the temporary pinning.

(v) Give the panel a coat of clear dope and allow to dry. Install surface tape with the second coat of dope, over the reinforcing tape and over the edges of the panel. Finish the doping scheme using regular doping procedures.

(vi) This type of repair may be extended to cover both the upper and lower surfaces and to cover several rib bays if necessary. The panel must be laced to all the ribs covered.

(4) *Unsewed (doped on) repairs.*—Unsewed (doped on) repairs may be made on all aircraft fabric-covered surfaces provided the never-exceed speed is not greater than 150 miles per hour. A doped patch repair may be used if the damage does not exceed 16 inches in any direction. Cut out the damaged section making a round or oval-shaped opening trimmed to a smooth contour. Clean the edges of the opening which are to be covered by the patch with grease solvent. Sand or wash off the dope from the area around the patch with dope thinner. Support the fabric from underneath while sanding.

For holes up to 8 inches in size, make the fabric patch of sufficient size to provide a lap of at least 2 inches around the hole. On holes over 8 inches in size, make the overlap of the fabric around the hole at least one-fourth the hole diameter with a maximum limit of lap of 4 inches. If the hole extends over a rib or closer than the required overlap to a rib or other laced member, the patch should be extended at least 3 inches beyond the rib. In this case, after the edges of the patch have been doped in place and the dope has dried, the patch should be laced to the rib over a new section of reinforcing tape in the usual manner. The old rib lacing and reinforcing tape should not be removed. All patches should have pinked edges, or if smooth, finished with pinked-edge surface tape.

(5) *Repair by a doped-in panel.*—When the damage exceeds 16 inches in any direction, make the repair by doping in a new panel.

This type of repair may be extended to cover both the upper and lower surfaces and to cover several rib bays if necessary. The panel should be laced to all the ribs covered, and doped or sewed as in the blanket method.

(i) Remove the surface tape from the ribs adjacent to the damaged area and from the trailing and leading edges of the section being repaired. Leave the old reinforcing tape and lacing in place. Next cut the fabric along a line approximately 1 inch from the ribs on the sides nearest to the injury, and continue the cuts to completely remove the damaged section. The old fabric should not be removed from the leading and trailing edge unless both upper and lower surfaces are being re-covered.

(ii) Cut a patch to run around the trailing edge 1 inch and to extend from the trailing edge up to and around the leading edge and back approximately to the front beam. The patch should extend approximately 3 inches beyond the ribs adjacent to the damage.

As an alternative attachment on metal or wood-covered leading edges, the patch may be lapped over the old fabric at least 4 inches at

the nose of the leading edge, doped, and finished with at least 8 inches of pinked-edge surface tape.

(iii) Clean the area of the old fabric that is to be covered by the patch and apply a generous coat of dope to this area. Put the new panel in place, pull as taut as possible, and apply a coat of dope to the portion of the panel which overlaps the old fabric. After this coat has dried, apply a second coat of dope to the over-lapped area and let dry.

(iv) Place reinforcing tape over the ribs under moderate tension and lace down in the approved manner.

(v) Give the panel a coat of clear dope and allow to dry. Install surface tape with the second coat of dope over the reinforcing tape and over the edges of the panel. Finish the doping scheme using the regular doping procedure.

(e) *Testing of fabric covering.*—Tensile testing of fabric is a practical means for determining whether a fabric covering has deteriorated to a point where re-covering is necessary. The testing may be carried out in accordance with the procedures set forth in existing industry or Government specifications such as Federal Specification CCC–T–191a, American Society for Testing Materials D39–39, and others. In all cases the specimens should be tested in the undoped condition. The use of acetone or dope thinner is suggested as a means of removing the dope.

(1) *Strength criteria for aircraft fabric.*

(i) Present minimum strength values for new aircraft fabric covering are contained in table 3–1.

(ii) The maximum permissible deterioration for used aircraft fabric based on a large number of tests is 30 percent. Fabric which has less than 70 percent of the original required tensile strength would not be considered airworthy. Table 3–1 contains the minimum tensile strength values for deteriorated fabric as tested in the undoped condition.

(iii) In cases where light aircraft operators use the Grade "A" type fabric, but are only required to use "Intermediate" grade fabric, the Grade "A" material is still considered airworthy, provided it has not deteriorated, as tested in the undoped condition, below 46 pounds, i. e., 70 percent of the originally required tensile strength value for new "Intermediate" fabric.

(f) *Replacement of fabric covering with metal sheet.*—Some thought has been given to replacing fabric covering with metal sheet. The following remarks are intended to serve as a guide when such a modification is contemplated.

Fabric may be replaced with metal sheet provided that the increase in weight does not cause the center of gravity travel to exceed its limits, that the gross weight of the aircraft remains within the operating limits and that the original structural integrity of the aircraft is not impaired by the alteration. With regard to the latter it should be noted that rivet holes in primary structural members are permissible for skin attachment only to the extent that the resultant cross-sectional area of the member is not less than the original minimum cross-sectional area. The selection of rivet patterns at skin joints is critical, especially in wings, as is also the effect of increased weight on wing moment of inertia. In view of the complexity of this modification it would be advisable to obtain CAA engineering approval of the alteration prior to its completion.

[(g) *Reinforcement* [8] *or replacement of conventional fabric covering with glass cloth.*—Before attempting a glass cloth covering installation it is advisable to consult with your local CAA inspector. The recommendations listed in this section should be used to supplement guidance information provided by CAA field personnel.

[(1) *Classifications.*—Glass cloth applications generally fall into the following three classes:

[(i) Class A is a reinforcement of a serviceable fabric covering either complete or partial wherein no direct structural attachment of the glass cloth is provided. This composite covering is considered airworthy until the underlying conventional fabric deteriorates be-

[8] After reinforcing, the airplane should be operated within the approved maximum weight and c. g. limits listed in the aircraft specification and the weight change determined by weighing the aircraft.

low the strength values listed in CAM 18, table 3–1.[9]

[(ii) Class B is a reinforcement of a fabric covering wherein the glass cloth is provided with the same direct structural attachment as was used with the original covering. This composite covering is considered airworthy until the underlying conventional fabric has deteriorated to a strength less than 50 percent of the minimum tensile strength values for new fabric listed in CAM 18, table 3–1.[9]

[(iii) Class C—Replacement coverings applied either independently or over a conventional covering wherein the glass covering should possess all the necessary characteristics for airworthiness and is in no way dependent upon the underlying covering if one is present. Covering of this class is considered a major alteration and requires engineering evaluation (discussion with a representative of the Administrator as explained in CAM 18.11–2).

[(2) *Detailed recommendations applicable to Class A and B.*

[(i) The tensile strength of the glass cloth should be at least equivalent to the tensile strength of the fabric originally installed on the aircraft, and the chemical finish of the glass cloth should be compatible with the dope or resin to be used.

[(ii) Either the blanket or envelope method of reinforcement should be used on treated cloths which can be sewn. Untreated cloths that cannot be sewn may be applied in overlapping sections. The practices recommended for doped seams should be used. Where the glass cloth is applied only to the upper surface of wings (hail protection) it should wrap around the trailing edge at least one inch and extend from the trailing edge up to and around the leading edge and back approximately to the front spar.

[NOTE: Blistering or poor adhesion has occurred when using bonding agents which were not chemically compatible with the present finish on the aircraft, or which had already deteriorated because of age. Before starting the work, the person making the installation should ascertain that the bonding agents used will be satisfactory. Favorable experience to date has been gained mostly with epoxy resins; however, other types may prove suitable. A simple means of determining this is to apply a small piece of the reinforcement cloth to the original cover using the proposed finishing process. The test sample should be visually checked the next day for blistering or poor adhesion.

[(iii) When butyrate dope is used to bond the glass cloth, the finishing may be accomplished in the following manner:

[(*a*) Thoroughly clean surface and allow to dry. If the surface has been waxed or previously covered with other protective coatings, thoroughly remove to the extent that at least the top finish coat is removed. After placing the glass cloth on the surface, brush out smoothly and thoroughly with butyrate dope thinner and 10 percent retarder by volume.

[(*b*) Apply a heavy coat of butyrate dope between all glass cloth overlaps. When dry, brush in butyrate rejuvenator and allow to set until the surface has again drawn tight.

[(*c*) Install reinforcing tape and structural attachments (Class B) and dope on finishing tape (cotton is recommended); then brush in one coat of 50 percent thinner and 50 percent butyrate dope.

[(*d*) Follow by conventional finishing schedules which call for application of one or more coats of full-bodied clear butyrate dope, two spray coats of aluminum pigmented butyrate dope, light surface sanding, and two spray coats of pigmented butyrate dope.

[(iv) When resin is used to bond the glass cloth, after surface cleaning, the finishing may be accomplished in the following manner:

[(*a*) Rejuvenate the doped surface. After placing the glass cloth on the surface, brush in a coat of resin thoroughly. Saturate overlap areas thoroughly. Allow to cure.

[(*b*) Brush in a second coat of resin smoothly and evenly and allow to cure. The finished surface should not be considered completed until all the holes between the weave of the cloth are filled flush with resin.

[[9] *Testing of Fabric Covering.*—The following procedure should be used for continued acceptance of Classes A and B glass cloth coverings:

[CLASS A—The underlying cloth should be tested annually in the conventional manner (undoped strip or accepted tester) after peeling back glass cloth in the areas to be tested.

[CLASS B—Applications should be tested annually (see paragraph (e) of this section), by pulling an undoped strip cut from the cover when the base fabric has deteriorated below the minimum strength values in CAM 18, table 3–1.

[(c) After water sanding, paint the surface with one coat of primer surfacer and finish as desired.

[(v) Install drainage grommets and inspection holes as originally provided.

[(vi) After reinforcing movable control surfaces, their static and dynamic balance should be checked to ascertain no change has been made therein. The flutter precautions stated in CAM 18.30–4 (a) (4) should be rigidly adhered to.

[(3) *Detail recommendations for replacement glass cloth coverings (Class C).*—In view of the lack of available information on such alterations, these should not be undertaken unless definite evidence of reasonable service life is furnished. This may entail operation on an experimental basis until it is clearly substantiated that there are no obvious unairworthy features or deficiencies associated with such installations as compared with the conventional covering originally provided. Before making this alteration the applicant should consider such factors as service results; tautening to assure proper airfoil shape and no adverse fabric buffeting; adequate tear strength; attachment reliability; adequate filler penetration and adhesion; and the weight added in the modification and its effects on useful load and flight characteristics.]

(18 F. R. 7396, Nov. 21, 1953, effective Nov. 30, 1953, amended 22 F. R. 600, Jan. 30, 1957, effective Feb. 20, 1957).

18.30–4 *Metal aircraft structures.—(CAA policies which apply to section 18.30).*

(a) *Metal construction.*

(1) ***Identification and inspection of materials.***—Identification and inspection of materials should be conducted in accordance with section 18.30–8.

(2) ***Corrosion prevention treatment, cleaners, and paint removers.***—Corrosion prevention treatment, cleaning and paint removing should be accomplished in accordance with section 18.30–7.

(3) ***Bolts, screws, and fasteners.***—Acceptable means of attachment are listed in section 18.30–6.

(4) ***Flutter precautions.***—When repairing control surfaces, especially on high-performance airplanes, care should be exercised that the repairs do not involve the addition of weight aft of the hinge line. Such procedure may adversely disturb the dynamic and static balance of the surface to a degree which would induce flutter. As a general rule it will be necessary to repair control surfaces in such a manner that the structure is identical to the original so that the weight distribution is not affected in any way.

(5) *Brazing.*—Brazing may be used for repairs to primary aircraft structures only if brazing was originally approved for the particular application. Brazing is not suitable for repair of welds in steel structures due to lower strength values of the brazed joint as compared to welded joints. Brazing may be used in the repair of secondary structures.

Due to the large number of brazing alloys used, it is difficult to be certain that the one used for repairing a brazed joint would not combine with the original brazing alloy to produce a low strength joint.

In cases where it is necessary to re-apply copper alloy brazing material on a steel surface more than once, and particularly if temperatures over 2,000° F. are reached, there is a possibility that brazing metal may penetrate between the grains in the steel to an extent that may cause cracking.

Copper brazing of steel is normally done in a special furnace having a reducing atmosphere, and at a temperature so high that field repairs are seldom feasible. If copper brazing is attempted without a controlled atmosphere, the copper will probably not completely wet and fill the joint.

(b) *Welded steel structures.*

(1) *General.*—Oxyacetylene or electric arc welding may be utilized for repair of aircraft structural elements. Most aircraft structures are fabricated from one of the weldable alloys; however, careful consideration should be given to the alloy being welded since all alloys are not readily weldable. In general, the more responsive an alloy steel is to heat treatment, the less suitable it is for welding, because the greater will be its tendency to become brittle and lose its ductility in the welded area. The following steels are readily weldable: plain carbon, nickel steels of the SAE 2300 series, chrome-nickel alloys of the SAE 3100 series, chrome-molybdenum steels of the SAE 4100 series and low nickel-chrome-molybdenum steel of the SAE 8600 series.

(i) *Preparation for welding.*—The elements to be welded should be properly held

in place by welding jigs or fixtures which are sufficiently rigid to prevent misalinement due to expansion and contraction of the heated material and which positively and accurately position the pieces to be welded together.

(ii) *Cleaning prior to welding.*—The parts to be welded should always be cleaned by wire brushing or other similar methods. When a wire brush is used, care should be taken never to use a brush of dissimilar metal, for example, brass or bronze. The small deposit left by a brass or bronze brush will materially weaken the weld and may cause cracking and subsequent failure of the weld. In case members were metallized, the surface metal may be removed by careful sandblasting followed by a light buffing with emery cloth.

(iii) *Condition of completed weld.*—The finished weld should incorporate the following characteristics:

(*a*) The seam should be smooth and of uniform thickness.

(*b*) The weld metal should taper off smoothly into the base metal.

(*c*) No oxide should be formed on the base metal at a distance of more than one-half inch from the weld.

(*d*) The weld should show no signs of blow holes, porosity or projecting globules.

(*e*) The base metal should show no signs of pitting, burning, cracking, or distortion.

(*f*) The depth of penetration should have been sufficient to insure fusion of base metal and filler rod.

(*g*) Welding scale should have been removed by wire brushing or sandblasting.

(iv) *Practices to guard against.*—No welds should be filed in an effort to make a smooth appearing job, as such treatment causes a loss in strength. Welds should not be filled with solder, brazing metal, or any other filler. When it is necessary to reweld a joint which was previously welded, all old-weld material should be thoroughly removed before rewelding. Never weld over a weld if it can be avoided because continual reheating may cause the material to lose its strength and to become brittle. Never weld a joint which has been previously brazed.

(v) *Torch size (oxyacetylene welding).*—Torch tip size is dependent upon the thickness of the material to be welded. Commonly used sizes proved satisfactory by experience are:

Thickness of steel in inches	Diameter of hole in tip	Drill size
0.015 to 0.031	0. 026	71
0.031 to 0.065	. 031	68
0.065 to 0.125	. 037	63
0.125 to 0.188	. 042	58
0.188 to 0.250	. 055	54
0.250 to 0.375	. 067	51

(vi) *Welding rods and electrodes.*—Welding rods and electrodes for various applications have special properties suitable for the application intended. Table 4–1 outlines oxyacetylene welding rod properties, and table 4–2 outlines arc welding electrode properties.

(vii) *Rosette welds.*—Rosette welds are generally employed to fuse an inner reinforcing tube (liner) with the outer member. Where a rosette weld is used, the hole should be made in the outside tube only and be of a sufficient size to insure fusion of the inner tube. A hole diameter of approximately one-fourth the tube diameter of the outer tube has been found to serve adequately for this purpose. In cases of tightly fitting sleeves or inner liners, the rosettes may be omitted.

(viii) *Heat-treated members.*—Members which depend on heat-treatment for their original physical properties should be welded using a welding rod suitable for producing heat-treated values comparable to those of the original members (see section 18.30–4 (b) (1) (vi)). Such members should be reheat-treated to the manufacturer's specifications after welding.

(ix) *Steel parts not to be welded.*

(*a*) *Brace wires and cables.*—Airplane parts that depend for their proper functioning on strength properties developed by cold working should not be welded. In this classification are streamlined wires and cables.

(*b*) *Brazed and soldered parts.*—Brazed or soldered parts should not be welded,

as the brazing mixture or solder will penetrate the hot steel and weaken it.

(c) *Alloy steel parts.*—Alloy steel parts such as aircraft bolts, turnbuckle ends, axles and other heat-treated alloy steel parts, which have been heat-treated to improve their mechanical properties, should not be welded.

(2) *Repair of tubular members.*

(i) *Inspection.*—Prior to repairing tubular members, the structure surrounding any visible damage should be carefully examined to insure that no secondary damage remains undetected. Secondary damage may be produced in some structure remote from the location of the primary damage by the transmission of the damaging load along the tube. Damage of this nature usually occurs where the most abrupt change in direction of load travel is experienced. If this damage remains undetected, loads applied in the normal course of operation may cause failure of the part.

(ii) *Location and alinement of welds.*—Unless otherwise noted welded steel tubing may be spliced or repaired at any joint along the length of the tube. Particular attention should be paid to proper fit and alinement to avoid eccentricities.

(iii) *Members dented at a cluster.*—Dents at a steel tube cluster joint may be repaired by welding a specially formed steel patch plate over the dented area and surrounding tubes, as shown in figure 4–1. To prepare the patch plate, cut a section of steel sheet of the same material and thickness as the heaviest tube damaged. Trim the reinforcing plate so that the fingers extend over the tubes a minimum of 1.5 times the respective tube diameter as shown in the figure. Remove all the existing finish on the damaged cluster joint area to be covered by the reinforcing plate. The reinforcing plate may be formed before any welding is attempted, or it may be cut and tack-welded to one or more of the tubes in the cluster joint, then heated and formed around the joint to produce a smooth contour. Apply sufficient heat to the plate while forming so that there is generally a gap of no more than one-sixteenth inch from the contour of the joint to the plate. In this operation avoid unnecessary heating and exercise care to prevent damage at the apex of the angle formed by any two adjacent fingers of the plate. After the plate is formed and tack-welded to the cluster joint, weld all the plate edges to the cluster joint.

(iv) *Members dented in a bay.*—Dented, bent, cracked or otherwise damaged tubular members may be repaired by using a split sleeve reinforcement, after first carefully straightening the damaged member, and in the case of cracks, drilling No. 40 (0.098) stop holes at the ends of the crack.

(a) *Repair by welded sleeve.*—This repair is outlined in figure 4–2. Select a length of steel tube sleeve having an inside diameter approximately equal to the outside diameter of the damaged tube and of the same material and at least the same wall thickness. Diagonally cut the sleeve reinforcement at a 30° angle on both ends so that the minimum distance of the sleeve from the edge of the crack or dent is not less than 1½ times the diameter of the damaged tube. Cut through the entire length of the reinforcing sleeve and separate the half sections of the sleeve. Clamp the two sleeve sections to the proper positions on the affected areas of the original tube. Weld the reinforcing sleeve along the length of the two sides, and weld both ends of the sleeve to the damaged tube as shown in the figure. The filling of dents or cracks with welding rod in place of reinforcing the member is not acceptable.

(b) *Repair by bolted sleeve.*—Due to the large percentage of tube area removed by the bolt holes, bolted sleeve repairs should not be used on welded steel structures without prior approval of the repair by the Civil Aeronautics Administration.

(v) *Welded-patch repair.*—Dents or holes in tubing may be repaired by a welded patch of the same material and one gage thicker, as shown in figure 4–3 provided:

(a) *Dented tubing.*

(1) Dents are not deeper than one-tenth of tube diameter, do not involve more than one-fourth of the tube circumference, and are not longer than tube diameter.

(2) Dents are free from cracks, abrasions and sharp corners.

(3) The dented tubing can be substantially re-formed without cracking before application of the patch.

(b) *Punctured tubing.*—Holes are not

longer than tube diameter and involve not more than one-fourth of tube circumference.

(c) *Location of patch.*—No part of the patch is permitted in the middle third of the tube. The patch should not overlap a tube joint.

(vi) *Splicing by inner sleeve method.*—If the damage to a structural tube is such that a partial replacement of the tube is necessary, the inner sleeve splice shown in figure 4–4 is recommended, especially where a smooth tube surface is desired. Diagonally cut out the damaged portion of the tube, and remove the burr from the edges of the cut by filing or similar means. Diagonally cut a replacement steel tube of the same material and diameter and at least the same wall thickness to match the length of the removed portion of the damaged tube. At each end of the replacement tube allow a one-eighth-inch gap from the diagonal cuts to the stubs of the original tube. Select a length of steel tubing of the same material and at least the same wall thickness and of an outside diameter approximately equal to the inside diameter of the damaged tube. This inner sleeve tube material should fit snugly within the original tube, with a maximum diameter difference of one-sixteenth inch. From this inner sleeve tube material cut 2 sections of tubing, each of such a length that the ends of the inner sleeve will be a minimum distance of 1½ tube diameters from the nearest end of the diagonal cut.

If the inner sleeve fits very tightly in the replacement tube, chill the sleeve with dry ice or in cold water. If this is insufficient, polish down the diameter of the sleeve with emery cloth. Weld the inner sleeve to the tube stubs through the one-eighth-inch gap between the stubs, completely filling the one-eighth-inch gap forming a weld bead over the gap.

(vii) *Splicing by outer sleeve method.*—If partial replacement of a tube is necessary, an outer sleeve splice using a replacement tube of the same diameter may be made. However, the outer sleeve splice requires the greatest amount of welding and, therefore, it should be used only where the other splicing methods are not suitable. Information on the replacement by use of the welded outside sleeve method is given in figures 4–5 and 4–6.

Squarely cut out the damaged section of the tube. Cut a replacement steel tube of the same material and diameter and at least the same wall thickness to match the length of the removed portion of the damaged tube. This replacement tube must bear against the stubs of the original tube with a total tolerance not to exceed one-thirty-second inch. Select a length of steel tubing of an inside diameter approximately equal to the outside diameter of the damaged tube, of the same material and at least the same wall thickness. This outer sleeve tube material should fit snugly about the original tube with a maximum diameter difference of one-sixteenth inch. From this outer sleeve tube material, cut 2 sections of tubing diagonally or fishmouth, each of such a length that the nearest ends of the outer sleeve are a minimum distance of 1½ tube diameters from the ends of the cut on the original tube. Use a fishmouth-cut sleeve wherever possible. Remove the burr from all the edges of the sleeves, replacement tube, and original tube stubs. Slip the two sleeves over the replacement tube, line up the replacement tube with the original tube stubs, and slip the sleeves out over the center of each joint. Adjust the sleeves to suit the area and to provide maximum reinforcement. Tack-weld the 2 sleeves to the replacement tube in 2 places before welding. Apply a uniform weld around both ends of one of the reinforcing sleeves and allow the weld to cool. Then weld around both ends of the remaining reinforcing tube. Allow one sleeve weld to cool before welding the remaining tube, to prevent undue warping.

(viii) *Splicing using larger diameter replacement tubes.*—This method of splicing structural tubes shown in figure 4–7 requires the least amount of cutting and welding. However, this splicing method cannot be used where the damaged tube is cut too near the adjacent cluster joints or where bracket mounting provisions make it necessary to maintain the same replacement tube diameter as the original. As an aid in installing the replacement tube, squarely cut the original damaged tube, leaving a minimum short stub equal to 2½ tube diameters on one end and a minimum long stub equal to 4½ tube diameters on the other end.

Select a length of steel tube of the same

material and at least the same wall thickness, having an inside diameter approximately equal to the outside diameter of the damaged tube. This replacement tube material should fit snugly about the original tube with a maximum diameter difference of one-sixteenth inch. From this replacement tube material, cut a section of tubing diagonally or fishmouth of such a length that each end of the tube is a minimum distance of 1½ tube diameters from the end of the cut on the original tube. Use a fishmouth-cut replacement tube wherever possible. Remove the burr from the edges of the replacement tube and the original tube studs. If a fishmouth cut is used, file out the sharp radius of the cut with a small, round file. Spring the long stub of the original tube from the normal position; slip the replacement tube over the long stub, then back over the short stub. Center the replacement tube between the stubs of the original tube. In several places tack-weld one end of the replacement tube; then weld completely around the end. In order to prevent distortion, allow the weld to cool completely; then weld the remaining end of the replacement tube to the original tube.

(3) *Repairs at built-in fuselage fittings.*—Repairs of built-in fuselage fittings may be accomplished in a manner as shown in figure 4–8. Splices should be made in accordance with the methods described in the foregoing sections. The following sections outline the different methods as shown in the figure.

(i) *Tube of larger diameter than original.*—A tube (sleeve) of larger diameter than original is used in the method shown in figure 4–9. This necessitates reaming the fitting holes (at longeron) to a larger diameter. The sleeve should extend approximately 6 inches forward (left of fitting) of the joint and 8 inches aft (right of fitting). The forward splice should be a 30° scarf splice. The rear longeron (right) should be cut off approximately 4 inches from the centerline of the joint and a spacer 1 inch long fitted over the longeron. This spacer and longeron should be edge welded. A tapered V-cut approximately 2 inches long should then be made in the aft end of the outer sleeve. The end of the outer sleeve should be swaged to fit the longeron and welded.

(ii) *Tube of same diameter as original.*—In this method, shown in figure 4–9, the new section of tube is the same size as the longeron forward (left) of the fitting. The rear end (right) of the tube is cut at 30° and forms the outside sleeve of a scarf splice. A sleeve is centered over the forward joint as indicated.

(iii) *Simple sleeve.*—The longeron is assumed the same size on each side of the fitting in this case, in figure 4–9, and is repaired by a simple sleeve of larger diameter than the longeron.

(iv) *Large difference in longeron diameter each side of fitting.*—Figure 4–9 (D) assumes that there is a quarter of an inch difference in the diameter of the longeron on the two sides of the fitting. The section of longeron forward (left) of the fitting is cut at 30° and a section of tubing of the same size as this tube and of such length as to extend well to the rear (right) of the fitting is slipped through it. One end is cut at 30° to fit the 30° scarf at left and the other end fishmouthed as shown. This makes it possible to insert a tube of such diameter as to form an inside sleeve for the tube on the left of the fitting and an outside sleeve for the tube on the right of the fitting.

(4) *Engine mounts.*

(i) *General.*—All welding on an engine mount should be of the highest quality, since vibration tends to accentuate any minor defect present. Engine mount members should preferably be repaired by using a larger diameter replacement tube telescoped over the stub of the original member and using fishmouth and rosette welds. However, 30° scarf welds in place of the fishmouth welds will be considered acceptable for engine mount repair work.

(ii) *Check of alinement.*—Repairs to engine mounts should be governed by accurate means of checking alinement. When tubes are used to replace bent or damaged ones, the original alinement of the structure must be maintained. This can be done by measuring the distance between points of corresponding members that have not been distorted, and by reference to the manufacturer's drawings.

(iii) *Cause for rejection.*—If all members are out of alinement, the engine mount should be replaced by one supplied by the manufacturer or one which has been built to con-

form to the manufacturer's drawings. The method of checking the alinement of the fuselage or nacelle points should be requested from the manufacturer.

(iv) *Engine mount ring damage.*—Minor damage such as a crack adjacent to an engine attachment lug may be repaired by rewelding the ring and extending a gusset or a mounting lug past the damaged area. Engine mount rings which have been extensively damaged should not be repaired but should be replaced unless the method of repair is specifically approved by an authorized representative of the Civil Aeronautics Administration.

(5) *Landing gears.*

(i) *Round tube construction.*—Landing gears made of round tubing may be repaired using standard repairs and splices, as shown in figures 4–2 and 4–8.

(ii) *Streamline tube construction.*—Landing gears made of streamlined tubing may be repaired by any one of the methods shown in figures 4–9 and 4–12.

(iii) *Axle assemblies.*—Representative types of repairable and nonrepairable landing gear axle assemblies are shown in figure 4–13. The types as shown in A, B, and C of this figure are formed from steel tubing and may be repaired by any applicable method shown in figures 4–2 to 4–12 in this manual. However, it will always be necessary to ascertain whether or not the members are heat-treated.

The axle assembly as shown in figure 4–13 D is, in general, of a nonrepairable type for the following reasons:

(*a*) The axle stub is usually made from a highly heat-treated nickel alloy steel and carefully machined to close tolerances. These stubs are usually replaceable and should be replaced if damaged.

(*b*) The oleo portion of the structure is generally heat-treated after welding and is perfectly machined to assure proper functioning of the shock absorber. These parts would be distorted by welding after machining.

(iv) *Ski pedestals.*—Damaged pedestals made of steel tubing may be repaired by using any applicable method shown in figures 4–2 through 4–12.

(6) *Built-up tubular wing or tail surface spars.*—Built-up tubular wing or tail surface spars may be repaired by using any of the applicable splices and methods of repair shown in figures 4–2 to 4–12 provided the spars are not heat-treated. In the case of heat-treated spars, the entire spar assembly would have to be reheat-treated to the manufacturer's specifications after completion of the repair. In general, this will be found less practicable than replacing the spar with one furnished by the manufacturer.

(7) *Wing and tail surface brace struts.*—In general it will be found advantageous to replace damaged wing brace struts made either from round or streamlined tubing by new members purchased from the original manufacturer. However, there is no objection from an airworthiness point of view to repairing such members in a proper manner. An acceptable method in case streamlined tubing is used will be found in figure 4–10. Similar members made of round tubes may be repaired using a standard splice, as shown in figures 4–2, 4–4, or 4–5.

(i) *Location of splices.*—Steel brace struts may be spliced at any point along the length of the strut provided the splice does not overlap any part of an end fitting. The jury strut attachment is not considered an end fitting; therefore, a splice may be made at this point. The repair procedure and workmanship should be such as to minimize distortion due to welding and the necessity for subsequent straightening operations. Every repaired strut should be carefully observed during initial flights to ascertain that the vibration characteristics of the strut and attaching components have not been adversely affected by the repair. The check should cover a wide range of speed and engine power combinations.

(ii) *Fit and alinement.*—When making repairs to wing and tail surface brace members, particular attention should be paid to proper fit and alinement to avoid eccentricities.

(8) *Repairs to welded parts.*—Repairs to welded assemblies may be made by either of the following methods:

(i) *Replacing welded joints.*—Cutting out the welded joint and replacing it with one properly gusseted.

(ii) *Replacing weld deposit.*—Chipping out the metal deposited by the weld process and

rewelding after properly reinforcing the joint by means of inserts or external gussets.

(c) *Stainless steel structures.*

(1) *General.*—Structural components made from stainless steel, particularly the "18–8" variety (18 percent chromium, 8 percent nickel), joined by spot welding, should be repaired only at the factory of origin or by a repair station designated by the manufacturer and rated by the Civil Aeronautics Administration to perform this type of work, unless the repair is made using bolted or riveted connections which are specifically approved by an authorized representative of the Civil Aeronautics Administration.

(2) *Secondary structural and nonstructural elements.*—Elements such as tip bows or leading and trailing edge tip strips of wing and control surfaces may be repaired by soldering with a 50–50 lead-tin solder or a 60–40 alloy of these metals. For best results a flux of phosphoric acid (syrup) should be used. Since the purpose of a flux is to attack the metal so that the soldering will be effective, any excess flux should be removed by washing the joint. Due to the high heat conductivity of stainless steel, a soldering iron large enough to do the work properly must be used. Leaky spot welded seams in boat hulls, fuel tanks, etc., should be repaired in a similar manner.

(d) *Riveted or bolted steel truss type structures.*—Repairs to riveted or bolted steel truss type structures should be made employing the general principles outlined in the following sections on aluminum alloy structures. Methods of repair of vital members should specifically be approved by a representative of the Civil Aeronautics Administration.

(e) *Aluminum alloy structures.*

(1) *General.*—Extensive repairs to damaged stressed skin on monocoque types of aluminum alloy structures should be made at the factory of origin or by a repair station rated for this type of work. In any event such work should be undertaken only by a certificated mechanic thoroughly experienced in this type of work. The repairs should preferably be made in accordance with specific recommendations of the manufacturer of the aircraft. In many cases repair parts, joints, or reinforcements can be designed and proof of adequate strength shown, without the calculation of the design loads and stresses, by properly considering the material and dimensions of the original parts and the riveted attachments. Examples illustrating the principles of this method as applied to typical repairs are given in this manual or may be found in textbooks on metal structures. An important point to bear in mind in making repairs on monocoque structures is that a repaired part must be as strong as the original with respect to all types of loads and general rigidity.

(i) *Use of annealed alloys for structural parts.*—The use of annealed 17S or 24S alloys for any structural repair of an aircraft is not considered satisfactory on account of their poor corrosion resisting properties.

(ii) *Hygroscopic materials improperly moisture-proofed.*—The use of hygroscopic materials improperly moisture-proofed such as impregnated fabrics, leather and the like, in attempting to effect watertightness of joints and seams is not considered acceptable practice.

(iii) *Drilling oversized holes.*—Great care should be exercised to avoid drilling oversize holes or otherwise decreasing the effective tensile area of wing spar capstrips, wing, fuselage, or fin longitudinal stringers, or other highly stressed tensile members. All repairs or reinforcements to such members should be done in accordance with factory recommendations or with the specific approval of a representative of the Civil Aeronautics Administration.

(iv) *Disassembly prior to repairing.*—If the parts to be removed are essential to the rigidity of the complete structure, the remaining structure should be adequately supported prior to disassembly, in such a manner as to prevent distortion and permanent damage to the remainder of the structure. Rivets may be removed by using special tools developed for the purpose or by center-punching the heads, drilling not quite through with a drill of the same size as the rivets, and shearing the heads off by a sharp blow with a small cold chisel. Rivet joints adjacent to the damaged parts should be inspected for partial failure (slippage) by removing one or more rivets to see if the holes are elongated or the rivets have started to shear.

(2) *Selection of material for replacement parts.*—In selecting the alloy, it is usually satisfactory to use 24S in place of 17S since the former is stronger. Hence, it will not be permissible to replace 24S by 17S unless the deficiency in strength of the latter material has been compensated by an increase in material thickness or the structural strength has been substantiated by tests or analyses. Information on the comparative strength properties of these alloys as well as 14S, R–301, 61S, 75S, etc., is contained in ANC–5, "Strength of Metal Aircraft Elements." The choice of temper depends upon the severity of the subsequent forming operations. Parts having single curvature and straight bend lines with a large bend radius may be advantageously formed from heat-treated material, while a part such as a fuselage frame would have to be formed from soft annealed sheet and heat-treated after forming. Sheet metal parts which are to be left unpainted should be made of clad (aluminum coated) material. All sheet material and finished parts should be free from cracks, scratches, kinks, tool marks, corrosion pits, and other defects which may be factors in subsequent failure.

(i) *Forming sheet metal parts.*—Bend lines should preferably be made to lie at an angle to the grain of the metal (preferably 90°). Before bending, all rough edges should be smoothed, burr removed, and relief holes drilled at the ends of bend lines and at corners to prevent cracks from starting. For material in the heat-treated condition, the bend radius should be large. See table 4–3 for recommended bend radii.

(3) *Heat treatment.*

(i) *General.*—All structural aluminum alloy parts should be heat treated in accordance with the heat treatment instructions issued by the manufacturers of the materials. If the heat treatment produces warping, the parts should be straightened immediately after quenching. Riveted parts should be heat-treated before riveting, to preclude warping and corrosion. When riveted assemblies are heated in a salt bath, the salt cannot be entirely washed out of the crevices, thus causing corrosion.

(ii) *Quenching in hot water or air.*—The quenching of 17S or 24S alloys in water above 100° F., or air at any temperature after heat treatment will not be satisfactory. For clad material, when the use of cold water will result in too great a distortion of the finished part, the use of oil, hot water, water spray or forced air draft is satisfactory, provided the parts will not be subject to severe corrosion in service. Quenching in still air is not satisfactory.

(iii) *Transferring too slowly from heat treatment medium to quench tank.*—Transfer of 17S or 24S alloys from the heat treatment medium to the quench tank should be accomplished as quickly as possible. An elapsed time of 10 to 15 seconds will, in many cases, result in noticeably impaired corrosion resistance.

(iv) *Reheating at temperatures above boiling water.*—Reheating at temperatures above that of boiling water of 17S or 24S alloys after heat treatment, and the baking of primers at temperatures above that of boiling water, will not be considered acceptable without subsequent complete and correct heat treatment, as such practice tends to impair the original heat treatment.

(4) *Riveting.*

(i) *Identification of rivet material.*—Identification of rivet material is contained in section 18.30–6.

(ii) *Replacement of aluminum alloy rivets.*—All protruding head rivets, (roundhead, flathead, and brazier-head) may be replaced by rivets of the same type or by AN–470 Universal-head rivets. Flushhead rivets should be used to replace flushhead rivets.

(*a*) *Replacement rivet size and strength.*—Replacements should be made with rivets of the same size and strength wherever possible. If the rivet hole has become enlarged, deformed, or otherwise damaged, the hole should be drilled or reamed for the next larger size rivet, care being taken, however, that the edge distances and spacings are not less than minimums listed in the next paragraph. Rivets may not be replaced by a type of lower strength properties, unless the lower strength is adequately compensated for by an increase in size or a greater number of rivets.

(*b*) *Replacement rivet edge distances and spacings for sheet joints.*—Rivet edge distance is defined as the distance from the center

of the rivet hole to the nearest edge of the sheet. Rivet spacing is the distance from the center of the rivet hole to the center of the adjacent rivet hole. Edge distances and spacings should not be less than the following:

(*1*) *Single row.*—Edge distances not less than 2 times the diameter of the rivet and spacing not less than 3 times the diameter of the rivet.

(*2*) *Double row.*—Edge distance and spacing not less than the minimums shown in figure 4–14.

(*3*) *Triple or multiple rows.*—Edge distance and spacing not less than the minimums shown in figure 4–14.

(iii) *Use of A17S–T3 aluminum alloy replacement rivets.*—It will be considered acceptable to replace all 17S–T3 rivets of three-sixteenths-inch diameter or less, and also all 24S–T4 rivets of five-thirty-seconds-inch diameter or less with A17S–T3 rivets for general repairs, provided the replacement rivets are one-thirty-second-inch greater in diameter than the rivets they replace, and provided the edge distances and spacings are not less than the minimums listed in the preceding section.

(iv) *Driving of rivets.*—A17S rivets may be driven in the condition received, but 17S rivets above three-sixteenths inch in diameter, and all 24S rivets should either be kept refrigerated in the "as quenched" condition until driven or be reheat-treated just prior to driving as they would otherwise be too hard for satisfactory riveting. Dimensions for formed flat rivet heads are shown in figure 4–15, together with commonly found rivet imperfections, which should be guarded against.

(v) *Blind-type and hollow rivets.*—Hollow rivets should not be substituted for solid rivets in load-carrying members without specific approval of the application by a representative of the Civil Aeronautics Administration.

Blind rivets may be used in blind locations in accordance with the conditions listed in section 18.30–6, provided the edge distances and spacings are not less than the minimums listed in section 18.30–4 (e) (4) (ii) (*b*).

(vi) *New and revised rivet patterns.*—A new or revised rivet pattern should be designed for the strength required in accordance with the specific instructions in sections 18.30–4 (e) (5) (vi) and 18.30–4 (e) (5) (viii (*d*).

A general rule for the diameter of rivets used to join dural sheets is to use a diameter approximately three times the thickness of the sheet, or somewhat larger for thin sheet. Rivets should not be used where they would be placed in tension tending to pull the heads off. A lap joint of thin sheets should be "backed up" by a stiffening section.

(5) *Repair methods.*—(i) *Precautions.*—When adding or replacing rivets adjacent or near to 17S or 24S rivets which have been installed previously, great care should be exercised or the older rivets will be loosened or may fail due to sharp vibrations in the structures caused by the action of the rivet gun and bucking bar. In every case all adjacent rivets should be carefully examined after the repair or alteration is finished to ascertain that they have not been harmed by operations in adjacent areas.

Rivet holes should be drilled, round, straight, and free from cracks. The snap used in driving the rivets should be cupped slightly flatter than the rivet heads shown in figure 4–15. Rivets should be driven straight and tight, but not overdriven or driven while too hard, since the finished rivet must be free from cracks. Information on special methods of riveting, such as flush riveting, usually may be obtained from manufacturer's service manuals.

(ii) *Splicing of tubes.*—Round or streamline tubular members may be repaired by splicing as shown in figure 4–16. Splices in struts should not overlap the fittings.

When solid rivets go completely through hollow tubes, their diameter should be at least one-eighth of the outside diameter of the outer tube. Rivets which are loaded in shear should be hammered only enough to form a small head, and no attempt should be made to form the standard round head. The amount of hammering required to form the standard round head often causes the rivet to buckle inside the tube. Satisfactory rivet heads may be produced in such installations by spinning, if the proper equipment is available. Correct and incorrect examples of this type of rivet application are incorporated in figure 4–16.

(iii) *Repairs to aluminum alloy members.*—Repairs to aluminum alloy members

should be made with the same material or with suitable material of higher strength. The 75S alloy has greater tensile strength than other commonly used aluminum alloys such as 14S and 24S but it is subject to somewhat greater notch sensitivity. In order to take advantage of its higher strength characteristics, particular attention should be paid in design of parts to avoid notches, small radii, large or rapid changes in cross-sectional area. In fabrication, care should be taken to avoid processing and handling defects, such as machine marks, nicks, dents, burrs, scratches and forming cracks. Cold straightening or forming of 75S–T6 can cause cracking; hence, it may be advisable to limit this processing to minor cold straightening.

(iv) *Wing and tail surface ribs.*—Damaged aluminum alloy ribs either of the stamped sheet-metal type or the built-up type employing special sections, square or round tubing, may be repaired by the addition of suitable reinforcement. Acceptable methods of repair are shown in figures 4–17 and 4–18. These examples deal with types of ribs commonly found in small and medium aircraft. Any other method of reinforcement should be specifically approved by a representative of the Civil Aeronautics Administration.

(*a*) *Trailing and leading edges and tip strips.*—Repairs to wing and control surface trailing and leading edges and tip strips should be made by properly executed and reinforced splices. Acceptable methods of trailing edge repairs are shown in figure 4–19.

(v) *Repair of damaged skin.*

(*a*) *Replacement of skin panels.*—In case metal skin is damaged extensively, repairs should be made by replacing an entire sheet panel from one structural member to the next. The repair seams should be made to lie along stiffening members, bulkheads, etc., and each seam should be made exactly the same in regard to rivet size, spacing, and rivet pattern as the parallel manufactured seams at the edges of the original sheet. If the two manufactured seams are different, the stronger one should be copied. See figure 4–20 for typical acceptable methods of repairs.

(*b*) *Patching of small holes.*—Small holes in skin panels which do not involve damage to the stiffening members may be patched by covering the hole with a patch plate in the manner shown in figure 4–20.

Flush type patches also can be installed in stressed skin type of construction. An acceptable and easy flush patch can be made by trimming out the damaged area and then installing a conventional patch on the underneath side or back of the sheet being repaired. A plug patch plate of the same size as the opening can then be inserted and riveted to the patch plate installed as above. This will complete an acceptable flush type patch. Other types of flush patches similar to those used for patching plywood, reference figure 2–16, also can be used. The riveting pattern used, however, should follow standard practice so as to maintain satisfactory strength in the sheet. (See section 18.30–4 (e) (5) (i).)

In general, patches in metal skin are not restricted as to size or shape; however, those of rectangular, circular, square, oval, and rectangular with round ends usually are more desirable as to appearance and ease of installation.

(vi) *Splicing of sheets.*—In some cases the method of copying the seams at the edges of a sheet may not be satisfactory; for example, when the sheet has cutouts, or doubler plates at an edge seam, or when other members transmit loads into the sheet. In these cases, the splice should be designed as illustrated in the following example:

Material: Clad 17S sheet, 0.032 inch thickness. Width of sheet (i. e. length at splice) = "W" = 10 inches.

To determine rivet size and pattern for a single-lap joint, similar to figure 4–14:

(*a*) Use rivet diameter of approximately three times the sheet thickness. $3 \times 0.032 = 0.096$ inch. Use one-eighth A17S–T3 rivets ($\frac{5}{32}$ A17S–T3 would also be satisfactory).

(*b*) Determine the number of rivets required per inch of width, "W", from table 4–5. Number per inch $= 4.9 \times .75 = 3.7$. Total number of rivets required $= 10 \times 3.7 = 37$ rivets.

(*c*) Lay out rivet pattern with spacing not less than those shown in figure 4–14. Referring to figure 4–14A, it is seen that a double-row pattern with the minimum spacing will give a total of 40 rivets. However, as only 37

rivets are required, 2 rows of 19 rivets each, equally spaced over the 10 inches will result in a satisfactory splice.

(vii) *Straightening of stringers or intermediate frames.*

(*a*) *Members slightly bent.*—Members which are slightly bent may be straightened cold and examined with a magnifying glass for injury to the material. The straightened parts should then be reinforced to an extent depending upon the condition of the material and the magnitude of any remaining kinks or buckles. If any strain cracks are apparent, complete reinforcements should be added by following the manufacturer's recommendations and the attachment of the reinforcements should be made in sound metal beyond the damaged portion.

(*b*) *Local heating.*—Local heating should never be applied to facilitate bending, swaging, flattening, or expanding operations on heat-treated aluminum alloy members, as it is difficult to control the temperatures closely enough to prevent possible damage to the metal and it may impair its corrosion resistance.

(viii) *Splicing of stringers and flanges.*—Splices should be made in accordance with the manufacturer's recommendations, which are usually contained in a repair manual.

Typical splices for various shapes of sections are shown in figures 4–21 and 4–23. Splices should be designed to carry both tension and compression and the splice shown in figure 4–22 will be used as an example illustrating the following general principles:

(*a*) *Statement of principles.*

(*1*) To avoid eccentric loading and consequent buckling in compression, splicing or reinforcing parts should be placed as symmetrically as possible about the centerline of the member and attachment made to as many elements as necessary to prevent bending in any direction.

(*2*) To avoid reducing the strength in tension of the original bulb angle, the rivet holes at the ends of the splice are made small (no larger than the original skin attaching rivets), and the second row of holes (those through the bulbed leg) are staggered back from the ends. In general the rivets should be arranged in the splice so that the design tensile load for the member and splice plate can be carried into the splice without failing the member at the outermost rivet holes.

(*3*) To avoid concentration of load on the end rivet and consequent tendency toward progressive rivet failure, the splice is tapered off at the ends, in this case by tapering the backing angle and by making it shorter than the splice bar (see Fig. 4–22).

The preceding principles are especially important in splicing stringers on the lower surface of stressed skin wings, where high tension stresses may exist. When several adjacent stringers are spliced, the splices should be staggered if possible.

(*b*) *Size of splicing members.*—When the same material is used for the splicing member as for the original member, the net cross section area (i. e., the shaded areas in fig. 4–21) of the splicing member should be greater than the area of the section element which it splices. The area of a section element (e. g. each leg of an angle or channel) is equal to the width multiplied by the thickness. For example, in figure 4–22, the bar, "B," is assumed to splice the upper leg of the stringer, and the angle, "A," to splice the bulbed leg of the stringer. Since the splice bar, "B," is not as wide as the adjacent leg, and since the rivet diameter is also subtracted from the width, the bar is made twice as thick in order to obtain sufficient net area.

(*c*) *The diameter of rivets in stringers.*—The diameter of rivets in stringers should preferably be between 2 and 3 times the thickness, "t," of the leg, but should not be more than one-fourth the width, "W," of the leg. Thus, one-eighth-inch rivets are chosen in the example, figure 4–22. If this splice were in the lower surface of a wing, the end rivets would be made the same size as the skin attaching rivets, say three thirty-seconds.

(*d*) *The number of rivets.*—The number of rivets required on each side of the cut in a stringer or flange may be determined from standard textbooks on aircraft structures, or may be found from tables 4–4, 4–5, or 4–6. In determining the number of rivets required in the example, figure 4–22, for attaching the splice bar, "B," to the upper leg, the thickness "t" of the element of area being spliced is one-sixteenth inch (use 0.064), the rivet size is

one-eighth inch, and table 4–5 shows that 9.9 rivets are required per inch of width. Since the width, "W," is one-half inch, the actual number of rivets required to attach the splice bar to the upper leg, on each side of the cut, is 9.9 (rivets per inch) $\times 0.5$ (inch width) $= 4.95$; use 5 rivets.

For the bulbed leg of the stringer, "t" $= 1/16$ inch (use 0.064), AN–3 bolts are chosen and the number of bolts required per inch of width $= 3.3$. The width, "W," for this leg, however, is 1 inch, and the actual number of bolts required on each side of the cut is $1 \times 3.3 = 3.3$; use 4 bolts. When both rivets and bolts are used in the same splice, the bolt holes should be accurately reamed to size. It is preferable to use only one type of attachment, but in the above example, the dimensions of the legs of the bulb angle indicated rivets for the upper leg and bolts for the bulb leg.

(*e*) *Splicing of intermediate frames.*—The same principles that are used for stringer splicing may be applied to intermediate frames, when the following point is also considered:

Conventional frames of channel or Z section are relatively deep and thin compared to stringers, and usually fail by twisting or by buckling of the free flange. The splice joint should be reinforced against this type of failure by using a splice plate heavier than the frame and by splicing the free flange of the frame with a flange of the splice plate, as illustrated in figure 4–24. Since a frame is likely to be subjected to bending loads, the length of splice plate "L" should be more than twice the width, "W_2," and the rivets spread out to cover the plate.

(ix) *Repairing cracked members.*—Acceptable methods of repairing various types of cracks occurring in service in structural elements from various causes are shown in figures 4–25 to 4–28. The following general procedure should be followed in repairing such defects:

(*a*) Small holes three thirty-seconds inch (or $1/8$ inch) should be drilled at the extreme ends of the cracks to mitigate the possibility of their spreading further.

(*b*) Reinforcements as shown in these figures should be added to carry the stresses across the damaged portion and to stiffen the joints.

The condition causing such cracks to develop at a particular point is stress concentration at that point in conjunction with repetition of stress (such as produced by vibration of the structure). The stress concentration may be due to the design or to defects such as nicks, scratches, tool marks, and initial stresses or cracks from forming or heat-treating operations. It should be noted that an increase in sheet thickness alone is usually beneficial but does not necessarily remedy the conditions leading to cracking.

(f) *Fittings.*

(1) *Steel fittings.*

(i) *Inspections for defects.*—Fittings should be free from scratches, vise and nibbler marks, and sharp corners. A careful examination of the fitting with a medium power (at least 10 power) magnifying glass will be considered an acceptable inspection.

When repairing aircraft after an accident or in the course of a major overhaul, all highly stressed main fittings should be inspected in accordance with the provisions of section 18.30–8, and, if necessary, corrosion prevention measures taken as recommended in section 18.30–7.

(ii) *Torn, kinked, or cracked fittings.*—Torn, kinked, or cracked fittings should be replaced and not repaired.

(iii) *Elongated or worn bolt holes.*—Elongated holes in fittings which were designed without bushings should not be reamed oversize but such fittings should be replaced unless the method of repair is approved by a representative of the Civil Aeronautics Administration. Holes should not be filled with welding rod. Acceptable methods of repairing elongated or worn bolt holes in landing gear, stabilizer, interplane or cabane strut ends only, not originally equipped with pin plates, are shown in figure 4–29. (See also figure 4–8 on longeron repair at a fitting.)

(2) *Aluminum and aluminum alloy fittings.*—Damaged fittings should be replaced with new parts having the same material specifications or the method of repair should be specifically approved by a representative of the Civil Aeronautics Administration.

(g) *Castings.*—Damaged castings should be replaced and not repaired unless the method of

repair is specifically approved by a representative of the Civil Aeronautics Administration.

(18 F. R. 7399, Nov. 21, 1953, effective No. 30, 1953.)

18.30–5 *Control cables and terminals.—(CAA policies which apply to section 18.30).*

(a) *Control cables and wires.*—Control cables and wires should be replaced if injured, distorted, worn, or corroded even though the strands are not broken. However, cable sections may be spliced using the procedures of section 18.30–5 (a) (1). Cable tension should be checked after installation to insure proper rigging.

(1) *Splicing.*—Control cables may be spliced when they become worn, distorted, corroded, or otherwise injured. The cable, thimbles, shackles, turnbuckles, bolts, and other parts should be of the same size, material, and quality as the original parts or of such size that the repaired cable will be of strength equivalent to the original. However, AN–666 through AN–669 standard swaged cable terminals develop the full cable strength and may be substituted for the original terminals wherever practical. If facilities and supplies are limited, repair may sometimes be accomplished, using thimbles, bushings, and turnbuckles in place of original terminals. When this is done, flexible cables 7 x 7 and 7 x 19, having a diameter of three thirty-seconds inch or over, may be woven spliced by means of the 5-tuck method. Flexible cable less than three thirty-seconds inch in diameter and nonflexible carbon steel 19 wire cable (MIL–C–6940) may be wrap-soldered. Directions for fabricating these splices and limitations as to their use are contained in the following paragraphs.

All splices should be installed so that no portion of the splice comes closer than 2 inches to any fairlead or pulley and the connections should not be located at points where jamming may occur during any portion of the travel of either the loaded cable or the slack cable in the deflected position.

(2) *Substitution of cable.*—Substitution of control cable (aircraft cord) for hard or streamlined wires will not be acceptable unless specifically approved by a representative of the Civil Aeronautics Administration.

(3) *Cutting and heating.*—Cables should be cut to length only by mechanical means. The use of a torch in any manner is not permitted. Wires and cables should never be subjected to excessive temperature. Soldering bonding braid to control cable will not be considered satisfactory.

(4) *Rust prevention.*—If the cables are made from tinned steel, the cable should be coated with rust preventive oil. It is to be noted that corrosion-resistant steel cable does not require this treatment for rust prevention.

(b) *Swaged terminals.*—Swaged cable terminals as for instance AN–666 through AN–669 manufactured in accordance with Air Force-Navy Aeronautical Standard Specifications are suitable for use in civil aircraft for loads up to and including the maximum cable loads permitted by the specification. Limits and tolerances for critical dimensions, before and after swaging, are specified on the AN standard cable terminal drawings and also in the literature issued by manufacturers of swaging tools. When such tools are used, it is important that the instructions supplied by the manufacturer including "go" and "no go" after swaging dimensions, be followed in detail in order that defective and inferior swaging will be avoided. Observance of all instructions should result in a swaged terminal developing the full rated strength of the cable.

(1) *Cable slippage in terminal.*—Care should be exercised to insure the cable is properly inserted in the band after the swaging operation is completed as instances have been noted of cases wherein only one-fourth inch of the cable was properly swaged in the terminal. Observance of the following precautions should minimize this possibility:

(i) Measure the length of the terminal end of the fitting to determine the proper length of cable to be inserted in the barrel of the fitting.

(ii) Lay off this length at the end of the cable and mark with masking tape. Since the tape will not slip, it will provide a positive marking during the swaging process.

(iii) After swaging, check the tape marker to make certain that the cable did not slip during the swaging operation.

(iv) Check swaged fitting with a "go"-"no go" gage to see that the fitting is properly compressed.

(v) Remove the tape and, using red

paint, paint the junction of the swaged fitting and cable.

(vi) At all subsequent service inspections of the swaged fitting, check for a gap in the painted section to see if cable slippage has occurred.

(2) *Ball - and - socket - type terminals.*—Ball-and-socket-type swaged terminals and other types that do not positively prevent cable untwisting should not be used for general replacement except where they were utilized on the original installation by the aircraft manufacturer.

(c) *Woven splice terminal.*—The 5-tuck woven splice terminals shown in figure 5–1 may be utilized on 7 x 7 flexible and 7 x 19 extra flexible cables of three thirty-seconds inch diameter or greater. This type of terminal will develop only 75 percent of the cable strength and should not be used to replace swaged or other high efficiency terminals unless it is definitely known that the design load for the cable is not greater than 75 percent of the cable minimum breaking strength (see table 5–1).

In some cases it will be necessary to splice one end of the cable on assembly. For this reason, investigate the original installation for pulleys and fairleads that might restrict the passage of the splice. The procedure for the fabrication of a woven splice is as follows: See figure 5–1 for the designation of numbers and letters referred to in this sequence of operations.

(1) Secure the cable around a bushing or thimble by means of a splicing clamp in a vise with the free end to the left of the standing wire and away from the operator. If a thimble is used as the end fitting, turn to point outward approximately 45°.

(2) Select the free strand (1) nearest the standing length at the end of the fitting and free this strand from the rest of the free ends. Next, insert a marlinspike under the first three strands (A, B, C) of the standing length nearest the separated strand of the free end and separate them momentarily by twisting the marlinspike. Insert the free strand (1) under the three separated strands through the opening created by the marlinspike. Pull the free end taut by means of pliers.

(3) Unlay a second strand (2) located to the left of the first strand tucked, and insert this second strand under the first two standing strands (A, B). Loosen the third free length (3) located to the left of the first two, and insert it under the first standing strand (A) of the original three (section AA).

(4) Remove the center or core strand (7) from the free end and insert it under the same standing strands (A, B). Temporarily secure the core strand to the body of the standing cable (see detail B). Loosen the last free strand (6) located just to the right of the first (1) and tuck it under the last two strands (E, F) of the standing cable. Tuck the fifth free end (5) around the fifth standing strand (E). Tuck the fourth free end (4) around the sixth standing strand (F) (see details B and E). Pull all strands snug toward the end fitting with the pliers. This completes the first tuck.

(5) Begin with the first free strand (1) and work in a counterclockwise direction, tucking free strands under every other strand. After the completion of every tuck, pull the strands tight with pliers. Pull toward the end fitting (see detail C). After the completion of the third complete tuck, cut in half the number of wires in each free strand. Make another complete tuck with the wires remaining. At the completion of the fourth tuck, again halve the number of wires in the free strands and make one final tuck with the wires remaining. Cut off all protruding strands and pound the splice with a wooden or rawhide mallet to relieve the strains in the wires. Serve the splice with waxed linen cord (6 ply, type B, Federal Specification V–T–291).

Start one-fourth inch from the end of the splice and carry the wrapping over the loose end of the cord and along the tapered splice to a point between the second and third tucks. Insert the end of the cord back through the last five wrappings and pull snug. Cut off the end, and if a thimble is used as an end fitting bend down the points. Apply 2 coats of shellac to the cord, allowing 2 hours between coats (see detail D). Carefully inspect the cable strands and splices for local failure. Weakness in a woven splice is made evident by a separation of the strand of serving cord.

(d) *Wrap-soldered splice.*—The wrap-soldered splice terminal shown in figure 5–2 may be utilized on flexible cables less than three

thirty-seconds inch in diameter and on nonflexible single-strand (19-wire) cable (MIL–C–6940). This type of terminal will develop only 90 percent of the cable strength and should not be used to replace swaged or other high efficiency terminals unless it is definitely known that the design load for the cable is not greater than 90 percent of the cable minimum breaking strength (see table 5–1).

The method of making the wrapped and soldered splice is as follows:

(1) The serving or wrapping wire should be of commercial soft-annealed steel wire or commercial soft iron wire, thoroughly and smoothly tinned or galvanized.

(2) The solder should be half tin and half lead conforming to Federal Specification QQ–S–571. The melting point of this solder varies from 320° to 390° F., and the tensile strength is approximately 5,700 pounds per square inch.

(3) Solder flux should be a compound of stearic acid (there should be no mineral acid present) and resin, with a composition of 25 to 50 percent resin. A warming gluepot to keep the flux in fluid state is desirable.

(4) Before the cable is cut the wires are soldered to prevent slipping. The preferred process is to tin and solder the cable thoroughly for 2 or 3 inches by placing in a solder trough, finishing smooth with a soldering tool. The cable may be cut diagonally to conform to the required taper finish.

(5) After being soldered and cut the cable is securely bent around the proper size thimble and clamped, taking care that the cables lie close and flat and that the taper end for finish lies on the outside. If it is necessary to trim the taper at this point in the process, it is preferable that it be done by nipping, but grinding is permissible, provided a steel guard at least 3 inches long and one-thirty-second-inch thick is placed between the taper end and the main cable during the operation, and that the heat generated from the grinding does not melt the solder and loosen the wires.

(6) Serving may be done by hand or machine, but in either case each serving convolution must touch the adjoining one and be pulled tightly against the cable, with spaces for permitting a free flow of solder, and inspection.

(7) Care should be exercised to prevent drawing of the temper of any cable wires by excessive temperature or duration of applied heat. The flux used in this soldering should be stearic acid and resin. The use of sal ammoniac or other compounds having a corrosive effect is not permitted as a flux.

(8) Soldering is accomplished by immersing the terminal alternately in the flux and in the solder bath, repeating the operation until thorough tinning and filling with solder under the serving wire and thimble is obtained. The temperature of the solder bath and place where terminal is withdrawn should not be above 450° F. A soldering iron may be used in the final operation to give a secure and good-appearing terminal. Care should be taken that the solder completely fills the space under the serving wire and thimble. A slightly hollowed cast iron block to support the splice during soldering may help in securing the best results. The use of abrasive wheels or files for removing excess solder is not permissible.

(9) As an alternative process for making terminals for nonflexible cable, the oxyacetylene cutting method and the presoldering method (soldering before wrapping) are permitted, but only on the following conditions:

(i) that the process of cutting securely welds all wires together;

(ii) that the annealing of the cable does not extend more than one cable diameter from the end;

(iii) that no filing be permitted either before or after soldering;

(iv) for protection during the operation of grinding the tapered end of the cable, a steel guard at least 3 inches in length and one-thirty-second-inch thick should be placed between the taper and the main cable;

(v) the heat from grinding should not draw the temper of the cable.

(10) Wrap-soldered splice terminals should not be used ahead of the firewall, or in other fire zones, or in other locations where they might be subjected to high temperature.

(e) *Safetying of turnbuckles.*—All turnbuckles should be safetied with safety wire using either the double or single wrap method, or with any appropriate approved special safetying device complying with the requirements

of CAA Technical Standard Order No. TSO-C21. For safety wire sizes and materials refer to table 5–2. Safety wire should never be reused. The turnbuckle should be adjusted to the correct cable tension so that no more than three threads are exposed on either side of the turnbuckle barrel. Turnbuckles should never be lubricated.

(1) *Double wrap method.*

(i) Of the methods using safety wire for safetying turnbuckles, the method described here is preferred, although either of the other methods described is also satisfactory. This method of double wrap safetying is shown in figure 5–3 (A). Use two separate lengths of the proper wire (see table 5–2). Run one end of one wire through the hole in the barrel of the turnbuckle and bend the ends of the wire towards opposite ends of the turnbuckle. Then pass the second length of the wire into the hole in the barrel and bend the ends along the barrel on the side opposite the first length. Spiral the two wires in opposite directions around the barrel to cross each other twice between the center hole and the ends. Then pass the wires at the end of the turnbuckle in opposite directions through the holes in the turnbuckle eyes or between the jaws of the turnbuckle fork, as applicable, laying one wire along the barrel and wrapping the other at least four times around the shank of the turnbuckle and binding the layed wires in place before cutting the wrapped wire off. Wrap the remaining length of safety wire at least four turns around the shank and cut it off. Repeat the procedure at the opposite end of the turnbuckle.

When a swaged terminal is being safetied, pass the ends of both wires, if possible, through the hole provided in the terminal for this purpose and wrap both ends around the shank as described above. When the hole in the terminal is not large enough to accommodate the ends of both wires, the hole may be enlarged in accordance with note 3 of table 5–2 and the safetying completed as described above. If the hole is not large enough to allow passage of both wires, pass the wire through the hole and loop it over the free end of the other wire, and then wrap both ends around the shank as described.

(ii) Another satisfactory double wrap method, similar to (i) except that the spiraling of the wires is omitted, is shown in figure 5–3 (B).

(iii) The wrapping procedures described and shown on AND 10482 may be used in lieu of the other safetying methods shown herein.

(2) *Single wrap method.*—The single wrap methods described below and illustrated in figures 5–3 (C) and (D) are acceptable but are not the equal of the double-wrap methods.

(i) Pass a single length of wire through the cable eye or fork or through the hole in the swaged terminal at either end of the turnbuckle assembly. Spiral each of the wire ends in opposite directions around the first half of the turnbuckle barrel so as to cross each other twice. Thread both wire ends through the hole in the middle of the barrel so that the third crossing of the wire ends is in the hole. Again spiral the two wire ends in opposite directions around the remaining half of the turnbuckle crossing them twice. Then pass one wire end through the cable eye or fork or through the hole in the swaged terminal, in the manner described in (1) (i) above, wrap both wire ends around the shank for at least four turns each, cutting off excess wire. This method is shown in figure 5–3 (C).

(ii) Pass one length of wire through the center hole of the turnbuckle and bend the wire ends toward opposite ends of the turnbuckle. Then pass each wire end through the cable eye or fork, or through the hole in the swaged terminal, and wrap each wire end around the shank for at least four turns, cutting off excess wire. This method is shown in figure 5–3 (D). After safetying, no more than three threads of the turnbuckle threaded terminals should be exposed.

(18 F. R. 7405, Nov. 21, 1953, effective Nov. 30, 1953.)

18.30–6 *Bolts, screws, and miscellaneous fasteners.—(CAA policies which apply to section 18.30).*

(a) *Bolts.*—Most bolts used in aircraft structures are either general purpose AN bolts, or NAS (National Aircraft Standard) internal wrenching or close-tolerance bolts. In certain cases aircraft manufacturers make up special bolts for a particular application and it is necessary to use them or their equivalent in replacement.

(1) *Identification.*—AN-type aircraft

bolts can be identified by the code markings on the bolt heads. The markings generally denote the bolt manufacturer, the material of which the bolt is made, and whether the bolt is a standard AN-type or a special purpose bolt.

AN standard steel bolts are marked with either a raised dash or asterisk, corrosion-resistant steel is indicated by a single raised dash, and AN aluminum alloy bolts are marked with two raised dashes. The strength and dimensional details of AN bolts are specified on the Army-Navy Aeronautical Standard Drawings.

Special purpose bolts include the high-strength and low-strength types, close-tolerance types, and bolts inspected by magnetic, fluorescent, or equivalent inspection methods.

Typical markings include "SPEC" (usually highly heat treated), an aircraft manufacturer's part number stamped on the head, or plain heads (low strength). Close-tolerance National Aircraft Standards (NAS) bolts are marked with either a raised or recessed triangle. The material markings for NAS bolts are the same as for AN bolts, except that they may be either raised or recessed. Bolts inspected magnetically (Magnaflux) or by fluorescent means (Zyglo) are identified by means of colored lacquer or a head marking of a distinctive type. Figure 6–1 shows the typical coding used on aircraft bolt heads.

(2) *Grip length.*—In general, bolt grip lengths should equal the material thickness. However, bolts of slightly greater grip length may be used provided washers are placed under the nut or the bolt head. In the case of plate nuts, shims may be added under the plate. For proper washers refer to section 18.30–6 (e).

(3) *Locking or safetying of bolts.*—All bolts and/or nuts, except self-locking nuts, should be suitably locked or safetied. Cotter pins and safety wire should not be reused.

(4) *Bolt fit.*—Many bolt holes, in particular those in primary connecting elements, should have close tolerances. Generally, it is permissible to use the first lettered drill size larger than the nominal bolt diameter except where the AN hexagon bolts are used in light-drive fit (reamed) applications and where NAS close-tolerance bolts or AN clevis bolts are used. Bolt holes should be normal to the surface involved to provide full bearing surface for the bolt head and nut and should not be oversize or elongated. In case of oversize or elongated holes, in critical members, advice should be obtained from an Aviation Safety agent or engineer, or the aircraft manufacturer before drilling or reaming the hole to take the next larger bolt, as usually items such as edge distance, clearance, etc., must be considered.

(5) *Torques.*—Table 6–1 gives the recommended torque values for both the fine and coarse thread series of nuts. These values should be followed unless other instructions require a specific torque for a given nut. Bolts and nuts should be clean, dry, and thoroughly degreased before installation. Threads should not be oiled. Nuts should be torqued in all important places, such as wing-joint bolts, engine-support bolts, landing-gear bolts, and the like.

When tightening castellated nuts on bolts, the cotter-pin holes may not line up with the slots in the nuts for the range of recommended values listed in table 6–1. Except in cases of highly stressed engine parts, the nut may be over-tightened to permit lining up the next slot with the cotter pin hole.

(6) *Hex-head bolts (AN–3 through AN–20).*—The hex-head aircraft bolt is an all-purpose structural bolt used for general applications involving tension or shear loads. Alloy steel bolts smaller than No. 10–32 and aluminum alloy bolts smaller than ¼-inch diameter should not be used in primary structure. Aluminum alloy bolts and nuts should not be used where they will be repeatedly removed for purpose of maintenance and inspection. Aluminum alloy nuts may be used with cadmium-plated steel bolts loaded in shear on land airplanes, but are not to be used on seaplanes due to the possibility of dissimilar metals corrosion.

(7) *Close-tolerance bolts (AN–173 through AN–186) (hex-head), and (NAS–80 through NAS–86) (100° countersunk).*—Close-tolerance bolts are used in high-performance aircraft in applications where the bolted joint is subject to severe load reversals and vibration. The standard AN hex-head bolts may be used for the same applications provided a light-drive fit is accomplished.

(8) *Internal wrenching bolts (MS–20004 through MS–20024 or NAS–495).*—These bolts

are suitable for use both in tension and shear applications. In steel parts, either the bolt hole should be countersunk to seat the large radius of the shank at the head or, as in aluminum alloys, a special heat-treated washer (NAS–143C) should be used to fit the head and to provide adequate bearing area. A special heat-treated plain washer (NAS–143) is used under the nut. Special high-strength nuts should be used on these bolts. (Refer to section 18.30–6 (d) (3) (vii).) All internal wrenching bolts should be replaced by another internal wrenching bolt. Standard AN hex-head bolts and washers cannot be substituted for them, as they do not have the required strength.

(9) *Drilled-head bolts (AN–73 through AN–81).*—The AN drilled-head bolt is similar to the standard hex-bolt, but has a deeper head which is drilled to receive wire for safetying. The AN–3 and the AN–73 series of bolts are interchangeable for all practical purposes from the standpoint of tension and shear strengths.

(b) *Screws.*—In general, screws differ from bolts by the following characteristics: Usually lower material strength, a looser thread fit (No. 2), head shapes formed to engage a screw driver, and the shank threaded along its entire length without a clearly defined grip. However, several types of structural screws are available that differ from the standard structural bolts only in the type of head. The material is equivalent and a definite grip is provided. The AN–525 washerhead screws, the AN–509–100° countersunk structural screws, and the NAS–204 through NAS–235 are such parts. The material markings are the same as those used on AN standard bolts.

(1) *Structural screws (NAS–204 through NAS–235) (AN–509 and AN–525).*—This type of screw, when made of alloy steel such as SAE–4130, NE–8630, or equivalent, and heat-treated from 125,000 to 145,000 p. s. i., may be used for structural assembly in shear applications similar to structural bolts.

(2) *Self-tapping screws.*—The AN–504 and AN–506 screws are used for attaching minor removable parts such as nameplates and the like. AN–530 and AN–531 are used in blind applications for the temporary attachment of sheet metal for riveting and the permanent assembly of nonstructural assemblies. AN–535 is a plain head self-tapping screw used in the attachment of nameplates or in sealing drain holes in corrosion-proofing tubular structures and is not intended to be removed after installation. Self-tapping screws should never be used to replace standard screws, nuts, bolts, or rivets in the original structure.

(c) *Pins.*—The three types of pins used in aircraft structures are: The taper pin, the flathead pin, and the cotter pin. Pins are used in shear applications and for safetying.

(1) Taper pins (AN–385 and AN–386) plain and threaded, are used in joints which carry shear loads and where absence of play is essential. The plain taper pin is drilled and usually safetied with wire. The threaded taper pin is used with a taper-pin washer (AN–975) and shear nut (safetied with cotter pin) or self-locking nut.

(2) The flathead pin (AN–392 through AN–406) commonly called a clevis pin, is usually used in conjunction with tie rod terminals and in secondary controls which are not subject to continuous operation. The pin should be safetied with a cotter pin and is customarily installed with the head up so that if the cotter pin fails or works out, the pin will remain in place.

(3) The AN–380 cotter pin is used for safetying bolts, screws, nuts, other pins, and in various applications where such safetying is necessary. The AN–381 cotter pin is used in locations where non-magnetic material is required, or in locations where resistance to corrosion is desired.

(d) *Nuts.*

(1) *Self-locking nuts.*—Self-locking nuts are acceptable for use on certificated aircraft subject to the restrictions on the pertinent "Manufacturers' Recommended Practice Sheets." Self-locking nuts are used on aircraft to provide tight connections which will not shake loose under severe vibration. Two types of self-locking nuts are currently in use, the all-metal type and the fibre or nylon lock type. Self-locking nuts should not be used at joints which subject either the nut or bolt to rotation. They may be used with antifriction bearings and control pulleys provided the inner race of the bearing is clamped to the supporting structure by the nut and bolt. Nuts which are

attached to the structure should be attached in a positive manner to eliminate rotation or misalinement when tightening the bolts or screws.

(i) All-metal lock nuts are constructed with either the threads in the locking insert out-of-phase with the load-carrying section or with a saw-cut insert with a pinched-in thread in the locking section. The locking action of the all-metal nut depends upon the resiliency of the metal when the locking section and load-carrying section are engaged by screw threads.

(ii) Fiber or nylon lock nuts are constructed with an unthreaded fiber locking insert held securely in place. The fiber or nylon has a smaller diameter than the nut, and when a bolt or screw is entered, it taps into the insert, producing a locking action. After the nut has been tightened, round or chamfered end bolts, studs or screws should extend at least the full round or chamfer through the nut. Flat end bolts, studs or screws should extend at least 1/32 inch through the nut. When fiber-type self-locking nuts are reused, care should be exercised that the fiber has not lost its locking friction or become brittle. They should not be reused if they can be run up finger tight. Bolts five-sixteenths-inch diameter and over with cotter-pin holes may be used with self-locking nuts but only if free from burrs around the holes. Bolts with damaged threads and rough ends should never be used. Do not tap the fiber-locking insert.

(iii) Self-locking nut bases are made in a number of forms and materials for riveting and welding to aircraft structure or parts.

Certain applications require the installation of self-locking nuts in channels, an arrangement which permits the attachment of many nuts with only a few rivets. These channels are track-like bases with regularly spaced nuts which are either removable or nonremovable. The removable type carries a floating nut which can be snapped in or out of the channel thus making possible the ready removal of damaged nuts. Nuts such as the clinch-type and spline-type which depend on friction for their anchorage are not acceptable for use in aircraft structures.

(iv) Self-locking nuts may be used on aircraft engines and accessories when their use is specified by the engine manufacturer in his bulletins or manuals. Refer to section 18.30–14 for detailed installation instructions.

(2) *Aircraft castle nut (AN–310).*—The castle nut is used with drilled-shank AN hex-head bolts, clevis bolts, eye bolts, drilled-head bolts or studs, and is designed to accommodate a cotter pin or lock wire as a means of safetying.

(3) *Miscellaneous aircraft nuts.*

(i) The plain nut (AN–315 and AN–335) has limited use on aircraft structures and requires an auxiliary locking device such as a check nut or lock washer.

(ii) Light hex nuts (AN–340 and AN–345) are used in miscellaneous applications and must be locked by an auxiliary device.

(iii) The check nut AN–316 is used as a locking device for plain nuts, screws, threaded rod ends and other devices.

(iv) The castellated shear nut AN–320 is designed for use with clevis bolts and threaded taper pins, which are normally subjected to shearing stress only.

(v) Wing nuts AN–350 are intended for use on hose clamps and battery connections, etc., where the desired tightness is ordinarily obtained by the use of the fingers or hand tools.

(vi) Sheet spring nuts, such as speed nuts, are used with standard and sheet metal self-tapping screws in nonstructural locations. They find various uses in supporting line clamps, conduit clamps, electrical equipment, access doors, and the like, and are available in several types.

(vii) Two commercial types of high-strength internal or external wrenching nuts are available, the internal and external wrenching Elastic Stop Nut and the Unbrako internal and external wrenching nut. Both are of the self-locking type, are heat-treated, and are capable of carrying the high-strength bolt tension load.

(e) *Washers:*— The types of washers used in aircraft structure are: Plain washers, lock washers, and special washers.

(1) Plain washers AN–960 and AN–970 are widely used under hex nuts to provide a smooth bearing surface, to act as a shim and to adjust the position of castellated nuts with respect to drilled cotter-pin holes in bolts. Plain washers should be used under lock washers to prevent damage to surfaces. Cadmium-plated

steel washers should be used under bolt heads or nuts on aluminum alloy or magnesium structures where corrosion if it occurs will then be between the washer and the steel. The AN-970 steel washer provides a greater bearing area than the plain type and is used in wooden structures under both bolt heads and nuts to prevent local crushing of the surface.

(2) Lock washers AN-935 and AN-936 may be used with machine screws or bolts whenever the self-locking or castellated type of nut is not applicable. They should not be used as fastenings to primary or secondary structures or where subject to frequent removal or corrosive conditions.

(3) Ball-socket and seat-washers AN-950 and AN-955 are used in special applications where the bolt is installed at an angle to the surface, or where perfect alinement with the surface is required at all times. These washers are used together.

(4) Taper-pin washers AN-975 are used with the threaded taper pin.

(5) NAS-143 washers for internal wrenching nuts and bolts are used with NAS internal wrenching bolts. Type "C" is countersunk to seat the bolthead shank radius and a plain-type washer is used under the nut. Both of these washers are heat-treated from 125,000 to 145,000 p. s. i.

(f) *Rivets.*

(1) *Standard solid-shank rivets.*—The universal-head rivets AN-470 are used in aircraft construction in both interior and exterior locations.

Roundhead rivets AN-430 and AN-435 are used in the interior of aircraft except where clearance is required for adjacent members.

Flathead rivets AN-441 and AN-442 are used in the interior of the aircraft where interference of adjacent members does not permit the use of roundhead rivets.

Brazier-head rivets AN-455 and AN-456 are used on the exterior surfaces of aircraft where flush riveting is not essential.

All protruding-head rivets may be replaced by AN-470 universal-head rivets. This rivet has been adopted as the standard for protruding-head rivets in this country.

Countersunk-head rivets AN-426 (100°), AN-425 (78°), and AN-420 (90°) are used on the exterior surfaces of aircraft to provide a smooth aero-dynamic surface, and in other applications where a smooth finish is desired. The 100° countersunk-head has been adopted as the standard in this country.

(i) *Material applications.*

(*a*) A-17S-T3 is the most commonly used rivet material utilized in aluminum alloy structures. Its main advantage lies in the fact that it may be used in the condition received without any further treatment.

(*b*) The 17S-T3 and 17S-T31 and 24S-T4 rivets are used in aluminum alloy structures where strength higher than that of the A17S-T3 rivet is needed. (See ANC-5 for differences between the 2 types of 17ST rivets specified here.)

(*c*) The 2S rivet of pure aluminum is used for riveting nonstructural parts fabricated from the softer aluminum alloys, such as 2S, 3S, and 52S.

(*d*) When riveting magnesium alloy structures, 56S rivets are used exclusively due to their corrosion-resistant qualities in combination with the magnesium alloys.

(*e*) Mild steel rivets are used primarily in riveting steel parts. Galvanized rivets should not be used on steel parts subjected to high heat.

(*f*) Corrosion-resistant steel rivets are used primarily in riveting corrosion-resistant steel parts, such as firewalls, exhaust stack bracket attachments and similar structures.

(*g*) Monel rivets are used in special cases for riveting high nickel steel alloys and nickel alloys. They may be used interchangeably with stainless steel rivets as they are more easily driven. However, it is preferable to use stainless steel rivets in stainless steel parts.

(*h*) Copper rivets are used for riveting copper alloys, leather, and other non-metallic materials. This rivet has only limited usage in aircraft.

(2) *Blind rivets.*—Blind rivets MS-20600, MS-20601, MS-20602, MS-20603 may be substituted for the normally required solid rivets in accordance with the blind rivet manufacturer's recommendations. They should not be used where the failure of a few rivets will seriously impair the airworthiness of the aircraft.

Design allowables for blind rivets are specified in ANC–5 "Strength of Metal Aircraft Elements."

(3) *Hi-shear rivets.*—Hi-shear rivets are sometimes used in connections where the shearing loads are the primary design consideration. Their use is restricted to such connections. It should be noted that hi-shear rivet patterns are not to be used for the installation of control surface hinges and hinge brackets. Also, they should not be painted prior to assembly even where dissimilar metals are being joined, but each end should be touched up with zinc chromate primer to allow the later application of the general airplane finish schedule.

Hi-shear rivets should be replaced only by the same type rivet. The installation and inspection should be in accordance with procedures recommended by the manufacturer.

(g) *Fasteners (cowl and fairing).*—A number of patented fasteners are in use on aircraft. A variety of these fasteners are commercially available and the manufacturer's recommendations concerning the proper use of these types of fasteners should always be considered in other than replacement application.

(h) *Unconventional attachments.*—Unconventional or new attachment devices should not be used in the primary structure unless approved by a representative of the Civil Aeronautics Administration.

(18 F. R. 7407, Nov. 21, 1953, effective Nov. 30, 1953, amended 19 F. R. 1950, Apr. 7, 1954, effective Apr. 1, 1954.)

18.30–7 *Corrosion protection, cleaners, and paint removers.—(CAA policies which apply to section 18.30).*

(a) *Corrosion protection.*—Almost all metals used in aircraft are subject to corrosion. Materials such as steel will rust, and aluminum and magnesium will form corrosion products, unless properly protected. Stainless steel, brasses, and copper alloys normally form a surface film which prevents further surface corrosion; however, under certain conditions, particularly when in contact with dissimilar metals, even these alloys must be protected. Corrosion is promoted by contact of metals with materials that absorb water. For example: wood, sponge rubber, felt, etc., may be sources of serious corrosion unless proper protection is used. Specific aspects of the more common types of corrosion are covered in subparagraphs (1)–(5).

(1) *Dissimilar metals corrosion.*—When two dissimilar metals are in contact and are connected by an electrolyte (water), accelerated corrosion of one of the metals may occur. For this reason metals have been divided into certain groups, based on their susceptibility to this form of corrosion. Unprotected contact between metals of different groups may result in dissimilar metals corrosion; therefore, contact between metals of dissimilar groups should be prevented or the contact surface should be adequately protected.

Similar metal groups (refers to surface of metal).

Group 1. Magnesium alloys.
Group 2. Zinc, cadmium, lead, tin, steel.
Group 3. Copper and its alloys, nickel and its alloys, chromium and stainless steels.
Group 4. All aluminum alloys.

Aluminum alloys (group 4) may be further subdivided into the following subgroups:

Subgroup A. 2S, 3S, 52S, 61S, 220, 355, 356, all clad alloys, such as Alclad and Pureclad.
Subgroup B. 14S, 17S, 24S, 75S, 195.

Under severe corrosive conditions, the above subgroups should be considered as dissimilar metal groups insofar as corrosion protection is concerned. This is particularly true where a relatively large area of an alloy classified in subgroup B is in contact with a relatively small area of subgroup A, in which case severe corrosion of the subgroup A alloy may be expected.

(2) *Intergranular corrosion.*—Intergranular corrosion occurs in certain aluminum alloys which are improperly heat-treated. For example, 24S alloys should be quenched quickly after heat-treatment in order to prevent intergranular corrosion. Since 24S alloy contains metals other than aluminum, particularly copper, severe corrosion may result if this alloy is quenched slowly, and a reduction in strength may result in improperly quenched 24S alloys when subjected to corrosive conditions. This type of corrosion is difficult to detect in its original stage except by microscopic examinations.

When well advanced it is characterized by scaling and blistering. Surface protection of slowly quenched 24S alloy will retard intergranular corrosion, but diffusion of the base metal into the surface coating will eventually destroy its effectiveness. The only protection which is regarded as being sufficiently adequate for air-quenched 24S is cladding of the aluminum alloy with pure aluminum. It should be noted that in some cases even clad alloys may be susceptible to intergranular corrosion. Other surface protection, such as anodizing, and subsequent coatings, such as zinc chromate primer, heavy greases, etc., may also prevent intergranular corrosion in cases where susceptibility of the alloy to intergranular corrosion is not too great.

(3) *Stress corrosion.*—This type of corrosion occurs when certain metals, mostly aluminum and magnesium alloys, are exposed to high stress and corrosive conditions. Stress corrosion has occurred in aluminum when steel bushings were pressed into the aluminum parts with too tight a fit, and were exposed to corrosive conditions. Stress corrosion can also occur in cold-worked metals which are not properly stress relieved.

(4) *Chemical.*—Corrosion protection against chemicals used in dusting and spraying operations is covered in detail in Civil Aeronautics Manual 8, Aircraft Airworthiness, Restricted Category. Reference should be made to that document for detailed information.

In general, corrosion protection measures against chemicals involves cleaning and/or surface protection and specific rules can be laid down only for the particular chemicals used. Operators are warned against the use of mercury compounds as their corrosive effects are particularly rapid. Under certain conditions some of the mercury compounds may cause structural failure within an hour.

(5) *Fretting.*—Fretting corrosion is a surface phenomenon which may occur when repeated relative motion of small amplitude is allowed to take place between closely fitting components. It is characterized by surface stains, corrosion, pitting and the generation of oxides. Certain aircraft parts have been known to fail by fretting corrosion, as for instance, antifriction bearings, connecting rods, knuckle pins, splined shafts, and clamped or bolted flanges; and close periodic inspections should be made of such parts. Where evidence of fretting corrosion is found, the affected parts should be replaced.

(b) *Corrosion protection measures.*—Surfaces which are completely dry cannot corrode. If a metal can be protected from moisture due to rain, condensation, or other causes, corrosion need not be feared.

Dirt, surface film, etc., on metal surfaces tend to retain moisture and hence promote corrosion. Water-absorbing materials, such as certain cleaners and calcium chloride, which may occasionally be used as a snow remover on runways are especially dangerous in this regard.

(1) *Anodizing and related processes.*—In anodizing, aluminum alloys are placed in an electrolytic bath, causing a thin film of aluminum oxide to form on the surface of the aluminum. This film is resistant to corrosion and affords a good paint base. Other processes which do not provide as good a corrosive protection as anodizing are, however, good paint bases. These processes are:

Alkaline cleaning followed by chromic acid dip.
Alcoholic phosphoric acid cleaner.
Alkaline dichromate treatment.

(2) *Plating.*—Steels are commonly plated with other metals to prevent corrosion. Plating is accomplished by placing the article in an electrolytic bath and metal from the plating solution is deposited on it. Various metals used in plating vary in the corrosion protection they afford steel. For instance, cadmium and zinc corrode before the steel does, hence slight breaks or cracks through the plating of these metals will not result in rusting of the exposed steel, since the surface metal is corroded and protects the steel. Chromium does not protect steel by this method, as steel will corrode before the chromium does, and thus depends for its protection on the tightness of the plate.

(3) *Parkerizing and bonderizing.*—These processes do not appear to be equal in corrosion protection to plating and are not generally acceptable as a substitute for plating; however, both are good paint bases.

(4) *Dichromate treatment for magnesium.*—The dichromate treatment consists of

boiling magnesium parts in a solution of sodium dichromate, resulting in a coating with little resistance to corrosion but which is a good paint base.

(5) *Chromium pickle treatment for magnesium.*—In this process the magnesium parts are placed in a solution of nitric acid and sodium dichromate. This will protect the magnesium during storage and acts as a bond for subsequent organic finishes.

(6) *Galvanic anodizing treatment for magnesium.*—This is an electrolytic process used to provide a paint base and corrosion preventive film on magnesium alloys containing manganese.

(7) *Cladding.*—Aluminum alloys which are susceptible to corrosion are frequently clad with pure aluminum. Slight pits, scratches, or other defects through the cladding material will not result in corrosion of the core, since the pure aluminum on the edges of the defect will be preferentially corroded, protecting the core.

(8) *Metal spraying.*—In this process metallic wire such as aluminum or zinc is fed into a special spray gun. The metal is melted and sprayed on the object to be protected, which must be thoroughly clean to prevent peeling of the sprayed coat. A "metallized" surface has very good resistance to corrosion if properly applied and of sufficient thickness.

(9) *Organic coatings.*—Zinc chromate primer, enamels, chlorinated rubber compounds, etc., are organic coatings commonly used on metals to protect them. The finishes should be applied according to the instructions of the manufacturer.

(10) *Dope-proofing.*—When doped fabrics are applied over an organic finished metal structure, the dope will have a tendency to loosen the finish on the metal. For this reason, organic coatings on the metal are usually covered with a dope-proof paint, with metal foil, or with cellulose tape to prevent the dope from striking through.

(11) *Tube interiors.*—The interiors of structural steel and aluminum tubing should be protected against corrosion. A small amount of water entrapped in a tube can corrode entirely through the tube thickness in a short period of time. For this reason, most structural tubing is flushed with hot linseed oil, paralketone, or other corrosion inhibitor. Hot flushing results in a good coating. The flushing liquid is usually introduced through small holes drilled in the tubing. These holes should be plugged with a screw or by other means to prevent entry of moisture. Air and watertight sealing of the tubing will also give adequate protection against corrosion if the tubing is internally dry before being sealed.

(c) *Corrosion-proofing of landplanes and seaplanes.*—In the repair or alteration of aircraft, corrosion-proofing the same or equivalent to that originally applied should be used unless the repair or alteration would result in increased susceptibility to corrosion, in which case additional corrosion protection measures should be employed.

(d) *Corrosion-proofing of landplanes converted to seaplanes.*—A special problem is encountered in the conversion of landplanes to seaplanes. In general, landplanes do not receive corrosion proofing to the same extent as do seaplanes manufactured as such. Corrosion-proofing standards for landplanes converted to seaplanes are divided into two classes: necessary minimum precautions and recommended precautions.

(1) *Necessary minimum precautions.*—The following procedures are considered the minimum which should be performed in order to safeguard the airworthiness of the converted aircraft and are not in themselves intended to maintain airworthiness for an indefinite period.

(i) Unless already protected, exposed fittings or fittings which can be reached through inspection openings should be covered with two coats of zinc chromate primer, paralketone, nonwater-soluble heavy grease, or comparable materials. This applies to items such as wing-root fittings, wing-strut fittings, control-surface hinges, horns, mating edges of fittings and attach bolts, etc.

(ii) Nonstainless control cables should be coated with grease or paralketone or other comparable protective coating, if not replaced with corrosion-resistant cables.

(iii) Inspection should be made of all accessible sections of the aircraft structure. Structural parts showing corrosion should be cleaned and refinished if corrosion attack is superficial. If a part is severely corroded, it

should be replaced with adequately corrosion-proofed parts.

(2) *Recommended precautions.*—The recommended precautions are those which are suggested as a means of maintaining such aircraft in condition for safe operation over extended periods of time.

(i) Provision of additional inspection openings should be made to assist in detecting corrosion. Experience has shown openings to allow inspection of lower and rearward portion of the fuselage to be particularly desirable.

(ii) Additional provision for free drainage and ventilation of all interiors should be made to prevent collection of moisture (scoop-type drain grommets).

(iii) Protection for the interiors of structural steel tubing should be provided. This may be done by air-and-watertight sealing or by flushing with hot linseed oil and plugging openings. Tubing should be inspected for missing sealing screws and the presence of entrapped water. Inspection should also be made for local corrosion around sealing screws, welded clusters and bolted fittings, which may be indicative of entrapped moisture.

(iv) The fabric of fabric-covered aircraft should be slit longitudinally on the bottom of the fuselage and tail structure for access to these sections. The lower structural members should be coated with zinc chromate primer (two coats), followed by dope-proof paint or wrapping with cellophane tape and rejoining the fabric. This precaution is advisable within a few months after start of operation as a seaplane.

(v) Interiors of metal-covered wings and fuselages should be sprayed with an adherent corrosion inhibitor.

(vi) Bags of potassium or sodium dichromate should be placed in the bottom of floats and boat hulls to inhibit corrosion.

(vii) Exterior surfaces of seaplanes should be washed with clear fresh water immediately following extended water operation, or at least once a day when operated in salty or brackish water. Interior surfaces of seaplanes exposed to spray should also be washed, taking care to prevent damage to electrical circuits or other items subject to injury.

(viii) Openings into the wings, fuselage, and control-surface members, such as tail-wheel wells, openings for control cables, etc., should be sealed as completely as possible to prevent entry of water.

(e) *Cleaners, polishes, brighteners, and paint removers.*—It is important that aircraft be kept throughly clean of deposits of contaminating substances such as oil, grease, dirt, and other foreign materials. The presence of such substances in any appreciable amount constitutes a potential hazard.

(1) *Materials.*—To avoid damage to aircraft through the use of harmful cleaning, polishing, brightening, or paint-removing materials, only those compounds which conform to existing government or established industry specifications or which are products that have been specifically recommended by the aircraft manufacturer as being satisfactory for the intended application, should be used. The product manufacturer's recommendations concerning use of his agent should be observed.

(2) *Removal of corrosion deposits from aluminum.*—After removing the paint and primers from the surfaces of both bare and clad aluminum alloys, the corroded area should be washed with clean fresh water. Corrosion products such as metal flakes, scale, powder and salt deposits may be removed by using fine emery, wire brush or sandpaper. The loose particles may subsequently be washed off with thinner or mineral spirits. In all cases the minimum treatment to produce a smooth clean surface should be used.

(3) *Surface stains.*—To remove surface stain and superficial etching of light metals, use a 5-percent-by-weight water solution of sodium bichromate or potassium dichromate. This solution should be allowed to dry on the surface after which excess chromate crystals must be brushed off and the surface subsequently primed and painted.

(4) *Light duty cleaners.*—Removal of dirt and grease from the surfaces of external parts of the aircraft may be accomplished by ordinary washing with water. Let the surface dry before further attempting to clean obstinate spots.

One part aircraft cleaning compound, AAF Specification No. 20015 or Navy Specification

No. C–147, with 20 parts water may be used on any aircraft, but it is most effective on fabric covered aircraft where the mixture is applied with a rag or mop, then wiped off with a dry rag. The water mixture may be sprayed on, allowed to remain for 5 to 10 minutes, and then hosed down with water.

(5) *Removal of spilled battery acid.*—For the neutralization of spilled battery acid, use sodium bicarbonate (baking soda), or sodium borate (borax) dissolved in water. The alkali salt should be removed completely after neutralization with copious quantities of water to prevent corrosion.

(18 F. R. 7409, Nov. 21, 1953, effective Nov. 30, 1953.)

18.30–8 *Identification and inspection of material.—(CAA policies which apply to section 18.30).*

(a) *Identification of steel stock.*—The Society of Automotive Engineers (SAE) and the American Iron and Steel Institute (A. I. S. I.) use a numerical index system to identify the composition of various steels. The numbers assigned, in the combined listing of standard steels issued by these groups, represent the type of steel and make it possible to readily identify the principal elements in the material.

The first digit of the four number designation indicates the type to which the steel belongs. Thus "1" indicates a carbon steel, "2" a nickel steel, "3" a nickel chromium steel, etc. In the case of simple alloy steels, the second digit indicates the approximate percentage of the predominant alloying element. The last two digits usually indicate the mean of the range of carbon content. Thus the symbol "1020" indicates a plain carbon steel lacking a principal alloying element and containing an average of 0.20 percent (0.18 to 0.23) carbon. The symbol "2330" indicates a nickel steel of approximately 3 percent (3.25 to 3.75) nickel and an average of 0.30 percent, (0.28 to 0.33) carbon content. The symbol "4130" indicates a chromium-molybdenum steel of approximately 1 percent (0.80 to 1.10) chromium, 0.20 percent (0.15 to 0.25) molybdenum, and 0.30 percent (0.28 to 0.33) carbon. The basic numbers for the four digit series of the carbon and alloy steels may be found in table 8–1.

(1) *Interchangeability of steel tubing.*

(i) "1025" welded tubing as per Specification MIL–T–5066, and "1025" seamless tubing conforming to Specification MIL–T–5066A, are interchangeable.

(ii) "4130" welded tubing as per Specification MIL–T–6731, and "4130" seamless tubing conforming to Specification MIL–T–6736, are interchangeable.

(iii) NE–8630 welded tubing conforming to Specification MIL–T–6734, and NE–8630 seamless tubing conforming to Specification MIL–T–6732, are interchangeable.

(b) *Identification of aluminum.*—To provide a visual means for identifying the various grades of aluminum and aluminum alloys such metals are usually marked with symbols such as Government Specification Number, the temper or condition furnished, or the commercial code marking. Plate and sheet are usually marked with specification numbers or code markings in rows approximately 5 inches apart. Tubes, bars, rods, and extruded shapes are marked with specification numbers or code markings at intervals of 3 to 5 feet along the length of each piece. The commercial code marking consists of a number which identifies the particular composition of the alloy. A letter preceding the number indicates a modification of the alloy. In addition letter suffixes designate the following:

S—Wrought.
O—Annealed, recrystallized (wrought products only).
H—Strain-hardened. Fractions preceding the letter indicate intermediate tempers as 1/2H, 3/4H, etc.
W—Solution heat-treated—unstable temper.
T—Heat-treated and aged to produce stable tempers other than O or H.
RT—Temper resulting from cold working after heat treatment and aging.

(1) *Clad aluminum alloys.*—Clad alloys have surface layers of pure aluminum or corrosion-resistant aluminum alloy bonded to the core material to inhibit corrosion. Presence of such a coating may be determined under a magnifying glass by examination of the edge surface which will show three distinct layers.

(2) *A test for distinguishing heat-treatable and nonheat-treatable aluminum alloys.*—If for any reason the identification mark of the alloy is not on the material, it is possible to distinguish between some heat-treatable alloys and some nonheat-treatable alloys by immersing a sample of the material in a 10-percent solution of caustic soda (sodium hydroxide). Those heat-treatable alloys containing several percent of copper (14S, 17S, 24S) will turn black due to the copper content. High copper alloys when clad will not turn black on the surface, but the edges will turn black at the center of the sheet where the core is exposed. If the alloy does not turn black in the caustic soda solution it is not evidence that the alloy is not heat-treatable, as various high strength heat-treatable alloys are not based primarily on the use of copper as an alloying agent. These include among others, 53S, 61S, 75S, R353, and R361 alloys. The composition and heat-treatability of alloys which do not turn black in a caustic soda solution can be established only by chemical or spectro-analysis.

(c) *Hardness testing.*—Hardness testing provides a convenient means for determining within reasonable limits the tensile strength of steel. It has several limitations in that it is not suitable for very soft or very hard steels. In hardness testing the thickness of the specimen being tested and the edge distance should be such that distortion of the metal due to these factors is eliminated. Several readings should be taken and the results averaged. In general, the higher the tensile strength, the greater is its hardness. Common methods of hardness testing are outlined below. These tests are suitable for determining the tensile properties resulting from the heat treatment of steel. Care should be taken to have case hardened, corroded, pitted, decarburized or otherwise nonuniform surfaces removed to a sufficient depth. Also exercise caution not to cold-work and consequently harden the steel during removal of the surface. The relationship between tensile strength and hardness is indicated in table 8–2.

(1) *Brinnell hardness test.*—In this test a standard load is applied to a smooth surface of metal through a hardened steel ball 1 centimeter in diameter. The numerical value of Brinnell hardness is equal to the load divided by the surface area of the resulting spherical impression.

(2) *Rockwell hardness test.*—In this test a standard minor load is applied to seat a hardened steel ball or a diamond cone in the surface of the metal, followed by the application of a standard major load. The hardness is measured by depth of penetration. Rockwell superficial hardness tests are made using light minor and major loads and a more sensitive system for measuring depth of indentation. It is useful for thinner sections, very small parts, etc.

(3) *Vickers hardness test.*—In this test a small pyramidal diamond is pressed into the metal. The hardness number is the ratio of the load to the surface area of indentation.

(4) *Testing of aluminum.*—Hardness tests are useful for testing aluminum alloy chiefly as a means of distinguishing between annealed, cold-worked, heat-treated, and heat-treated and aged material. It is of little value in indicating the strength or quality of heat treatment. Typical hardness values for aluminum alloys are shown in table 8–3.

(d) *Inspection of metals.*

(1) *Inspection by magnifying glass after welding.*—Careful examination of all joints with a medium-power magnifying glass (at least 10 power) after first removing all scale is considered an acceptable method of inspection for repaired structures. The practice of filling steel tubular structures with hot linseed or petroleum base oils, under pressure, in order to coat the inside surface and inhibit corrosion, assists in the detection of weld cracks as the hot oil will seep through cracks invisible to the eye. This practice, though not justifiable in all cases, is suggested where a very large portion of the structure has been rewelded.

(2) *Magnetic particle inspection.*—Magnetic particle inspection or Magnaflux (a patented trade name used by the Magnaflux Corp.) can be used only on magnetic materials; i. e., iron and steel. Most stainless or high chromium nickel and manganese alloy steels, being nonmagnetic, cannot be inspected by this method. The method consists essentially of detection of discontinuities (cracks, voids, defects, pits, subsurface holes, etc.) by means of accumulation of magnetic particles on the discontinui-

ties when the part has been magnetized. The magnetic particles are applied either dry as a powder or suspended in light oil. For complete magnetic inspection, both circular and longitudinal magnetization should be employed.

(i) Circular magnetization is produced by transmitting an electric current directly through the article being tested, or through a central conductor placed through the part, in which case defects parallel to the flow of current may be detected. As an example, circular magnetization of a round steel bar would be produced by placing the ends of the steel bar between the heads of the magnetic inspection machine and passing a current through the bars. Magnetic particles, applied either during or after the passage of the current or after the current in magnetically retentive steels would disclose discontinuities parallel to the axis of the bar.

(ii) Longitudinal magnetization is induced in a part by placing the part in a strong magnetic field, such as the center of a coil. Thus longitudinal magnetization of a round steel bar would be produced by placing the ends of the bar between the heads of a magnetic-inspection machine and placing the DC solenoid around the bar. After application of the magnetic particles either during or subsequent to magnetization, discontinuities perpendicular to the axis of the bar would be disclosed.

(iii) Red, black, and sometimes gray particles are used in the wet or dry methods. In the case of wet inspection, a fluorescent magnetic particle may also be used. This process is commercially known as Magnaglo. Articles inspected using this latter medium are illuminated by so-called black light, and the magnetic particles glow by fluorescence causing any defects or indications to be easily visible. The wet inspection procedure provides better control and standardization of the concentration of magnetic particles, easier application to complex shapes, and indications that are easier to interpret. This is due to the difficulty of obtaining efficient distribution of the dry powder during magnetization. The dry procedure is particularly suitable for detecting subsurface defects, such as when heavy welds, forgings, castings, etc., should be tested. The wet continuous process is recommended for most aircraft work.

(iv) The appearance of accumulations of magnetic particles in magnetic inspection does not necessarily mean that a defect exists. Changes in section of the part, particularly where the change in section is very sharp, and also holes drilled through a part, will frequently cause indications. Surface defects are most easily detected, however, since a crack will cause a sharp line of magnetic particles to appear. Subsurface defects are less easily detected, since only a general collection of magnetic particles will be observed. However, since subsurface defects very rarely occur in wrought materials, that is not important in most aircraft applications.

(v) After magnetic inspections, parts should be carefully cleaned and demagnetized.

(3) *Portable magnetic particle inspection.*—Portable type magnetic particle inspection equipment such as Sonoflux have been developed for use in the detection of surface or slightly subsurface discontinuities in ferromagnetic aircraft materials and parts. This type equipment gives better results when the wet suspension type of indicator, such as that conforming to Specification MIL–I–6868, is used with the powder supplied by the equipment manufacturer. As in other inspection methods, extreme care should be taken by the user in following the manufacturer's recommendations concerning use of the procedure.

(4) *X-ray or radiographic inspection.*—X-ray may be used on either magnetic or nonmagnetic materials for detecting subsurface voids such as open cracks, blow holes, etc. When a photographic film or plate is used to record the X-ray (in a similar manner to exposing a photographic film), the process is known as radiography. When the X-rays are projected through the part onto a fluorescent screen, the process is known as fluoroscopy. The technique used for radiography should be capable of indicating the presence of defects having a dimension parallel to the X-ray beam of 3 percent of the thickness of the part being radiographed for magnesium alloys and 2 percent for all other metals and alloys. Inspection using a fluoroscopic screen is much less

sensitive. Consequently, the radiographic method is usually used for inspection and the fluoroscopic method is used for culling.

Radiographic inspection is extensively used in the aircraft industry for the inspection of all types of casting including sand castings, permanent-mold castings, die castings, etc. X-ray is particularly useful for this application, since it is capable of disclosing defects which exist below the surface and also since the open types of defects which occur in castings (shrinks, blow holes, dross inclusions, etc.) are readily disclosed by X-rays. In the inspection of forged or wrought metals, on the other hand, X-ray inspection is not used so extensively. This is due to the fact that the process of forging or working causes most defects which originally existed in the metal to become tightwalled cracks which are somewhat difficult to disclose by X-rays.

If doubt exists as to the suitability of the X-ray examination, a laboratory familiar with the X-ray examination of aircraft parts should be consulted.

(5) *Fluorescent penetrant.*—In this method of inspection (Zyglo), the article, which may be of metal, plastic material, etc., is first carefully cleaned to permit the fluorescent material to penetrate cracks and defects. It should be noted that cleaning of aluminum may necessitate stripping of any anodizing, since the anodized film, if formed after the defect, could prevent penetration of the fluorescent material and an anodized film tends to hold penetrants which may obscure defect indications. After the article is cleaned, it is either sprayed, painted, or immersed in a bath of fluorescent penetrant. The penetrant is a light oil which has the property of fluorescing or emitting visible light when excited by invisible radiation in the near ultra-violet range (so-called black light). It is important that the penetrant be given sufficient time to pentrate cracks and defects, and for fatigue cracks a minimum of 30 minutes is stipulated by MIL–I–6866. Heat may also be applied to facilitate entry of the penetrant. After the penetrant has had sufficient time to enter any defects, the excess on the surface of the article is washed off by water spray. This washing should be checked by inspection with black light, by which means any penetrant left on the surface may be detected. After washing, a developer is used to bring out the indication. This developer may be in a liquid form or may be a light powder that absorbs the penetrant as it oozes from cracks and defects in the part. The development may also be aided by application of heat to the part. After the indications have been developed, the part is inspected under black light. Any crevices into which the fluorescent material has penetrated will show as luminous areas.

Indications which appear are usually checked by close inspection with a magnifying glass, by etching with a suitable acid or caustic solution, or it may be necessary to cross-section that part, a procedure which, of course, destroys its usefulness. Usually a skilled operator can determine whether an indication actually shows a defect or whether it is a false indication. Also, the internal extent of the defect can sometimes be estimated with fair accuracy.

It should be noted that this process of inspection, like all others, has its limitations. If the fluorescent material for any reason is not able to penetrate into a defect, such a defect cannot be detected.

(6) *Dye penetrants.*—Several dye penetrant type inspection kits are now available which will reveal the presence of surface cracks or defects and subsurface flaws which extend to the surface of the part being inspected. These penetrant type inspection methods are considered acceptable, providing the part being inspected is thoroughly cleaned, all areas are readily accessible for viewing, and the manufacturer's recommendations as to method of application are closely followed.

(i) *Cleaning.*—An inspection is initiated by first cleaning the surface to be inspected of dirt, loose scale, oil, and grease. Pre-cleaning may usually be accomplished by vapor degreasing, or with volatile cleaners. The cleaner should be volatile so that it will evaporate from the defects before applying the penetrant dye. Sand blasting is not desirable as a cleaning method since surface indications may be obscured. It is not necessary to remove anodic films from parts to be inspected since the dye readily penetrates such films. Special proce-

dures for removing excess dye should be followed, however.

(ii) *Application of penetrant.* — The penetrant is applied by brush, spray, or by dipping and allowed to stand for a minimum of 2 minutes. Dwell time may be extended up to 15 minutes depending upon the temperature of the part and fineness of the defect or when the surface being inspected is ground. Parts being inspected should be dry and heated to at least 70° F., but not over 130° F. Very small indications require increased penetration periods.

(iii) *Removal of dye penetrant.*—Surplus penetrant is usually removed by application of a special cleaner or remover, or by washing with plain water and the part is then allowed to dry. Water rinse may also be used in conjunction with the remover, subject to the manufacturer's recommendations.

(iv) *Application of developer.*—A light and even coat of developer is applied by spraying, brushing or dipping. When dipping, care should be exercised to avoid excess accumulation. Penetrant which has penetrated into cracks or other openings in the surface of the material will be drawn out by the developer resulting in a bright red indication. Some idea of the size of the defect may be obtained after experience by watching the size and rate of growth of the indication.

(e) *Identification of fabric.*—Cotton fabric is used extensively as covering for wing, fuselage, and control surfaces of aircraft. Acceptable grades of fabric for use on civil aircraft may be found in table 3-1 of section 18.30-3. In general, the fabric can be readily identified by a continuous marking to show the manufacturer's name or trademark and specification number. This marking may be found stamped along the selvage. The specification number for grade "A" fabric is AMS-3806, and for the intermediate grade AMS-3804. The corresponding CAA Technical Standard Order Numbers for these materials are TSO-C-15 and TSO-C-14, respectively. Increasing interest in the use of linen and certain synthetic fabrics in lieu of cotton has been noted. Identity of such materials should always be verified by the user. (See table 3-1.)

(f) *Identification of plastics.*—Plastics cover a broad field of organic synthetic resins and may be divided into two main classifications—thermoplastic and thermosetting plastics.

(1) *Thermoplastics.*—Thermoplastics may be softened by heat and can be dissolved in various organic solvents. Two kinds of transparent thermoplastic materials are commonly employed in windows, canopies, etc. These materials are known as acrylic plastics and cellulose acetate plastics. These two plastics may be distinguished by the absence of color, the greater transparency, and the greater stiffness of the acrylic, as compared to the slight yellow tint, lower transparency, and greater flexibility of cellulose acetate.

(2) *Thermosetting plastics.*—Thermosetting plastics do not soften appreciably under heat but may char and blister at temperatures of 204° to 260° C. (400° to 500° F.). Most of the molded products of synthetic resin composition, such as phenolic, urea-formaldehyde and melamine-formaldehyde resins, belong to the thermosetting group.

(18 F. R. 7411, Nov. 21, 1953, effective Nov. 30, 1953.)

18.30-9 *Aircraft equipment.—(CAA policies which apply to section 18.30).*

(a) *General.*—Aircraft equipment is usually considered as a part of the airplane and many of the maintenance and repair procedures pertinent to the airplane are equally applicable to the various major items of equipment. However, the following general information should be helpful in maintaining the essential equipment items in an airworthy condition.

(b) *Landing gear equipment.*

(1) *Wheels.*—Wheels should be inspected at periodic intervals for cracks, corrosion, dents, distortion, and faulty bearings. In split-type wheels, bolt holes which may have become elongated due to some play in the through-bolt should be reconditioned by the use of Rosan inserts or other suitable means. The bolts should also be inspected for wear; if excessive wear is evident, the bolts should be replaced. In bolting the wheel halves together, care should be taken to have the nuts properly tightened. These should be inspected periodically to be sure that they are tight so that there will be no movement between the two halves of the wheel. This movement causes elongation of the bolt holes. If the wear is too great to be corrected as stated above, it may necessitate

414269 O - 57 - 6

scrapping of the wheel. Grease-retaining felts in the wheel assembly should be kept in a soft, absorbent condition. If they have become hardened they should be cleaned in gasoline; if this fails to soften them, they should be replaced.

(i) *Corrosion of wheels.*—Wheels should be thoroughly cleaned if corroded and then examined for soundness. If bare, corroded spots appear, they should be smoothed up and repainted with a protective coating such as zinc chromate primer and aluminum lacquer or some other equally effective coating to prevent further corrosion. Wheels with severe corrosion which might affect their strength should be replaced.

(ii) *Dented or distorted wheels.*—Wheels which wobble excessively due to deformation resulting from a severe side load impact should be replaced. In questionable cases, the local representative of the Civil Aeronautics Administration should be consulted concerning the airworthiness of the wheels. Dents of a minor nature do not affect the serviceability of a wheel.

(iii) *Wheel bearings.*—Wheel bearings should be inspected periodically to detect damage caused by maladjustment or foreign material. Damaged or excessively worn parts should be replaced. Bearing cones should be packed with a high melting point grease prior to their installation. When assembling the wheel to the airplane, the axle nut should be tightened just enough to eliminate any drag or wheel side play on the axle.

(2) *Brakes.*—The clearance between moving and stationary parts of a brake should be maintained in accordance with the manufacturer's recommendations. The brake should be disassembled and inspected periodically and the parts examined for wear, cracks, warpage, corrosion, elongated holes, etc. If any of these or other faults are indicated the affected parts should be repaired, reconditioned, or replaced, depending on the seriousness of the difficulty, in accordance with the manufacturer's recommendations. Surface cracks on the friction surfaces of brake drums occur frequently due to high surface temperature. These may be disregarded as seriously affecting the airworthiness until they become cracks of approximately one inch in length. The brake drums or surfaces then should be replaced.

(i) *Hydraulic brakes.*—For proper maintenance, the entire hydraulic system from the reservoir to the brakes should be inspected. The fluid in the reservoir should be maintained at the recommended level with the proper brake fluid. Flexible hydraulic hose which has deteriorated due to long periods of service should be replaced. When air is present in the hydraulic system, the system should be bled in accordance with the manufacturer's instructions. Hydraulic piston seal gaskets should be replaced when there is evidence of leakage.

(ii) *Mechanical brakes.*—The working parts of mechanically operated brakes should be kept free of dirt and foreign matter and should work freely at all times. Excessive play in the linkage system should be kept to a minimum.

(3) *Tires.*

(i) *Inspection.*—For maximum safety, it is essential that tires be inspected frequently for cuts, worn spots, bulges on the sidewalls, and foreign bodies imbedded in the treads and any repairs which are necessary should be made.

(ii) *Repair.*—It is recommended that repairs be made by either the original tire manufacturer or reliable local tire repair agencies in accordance with procedures outlined in military specification MIL–C–7726 pertaining to repair and recapping of used pneumatic aircraft tires. The specification states that tires should not be repaired if any of the following conditions are found during inspection:

(*a*) Flex breaks or evidence thereof.

(*b*) Bead injuries which extend into more than 3 plies of a tire having 16 or more plies or into 25 percent of the plies on all other tires.

(*c*) Evidence of separation between plies or around bead wire.

(*d*) Injuries requiring inside reinforcement. This includes all casings needing section repairs.

(*e*) Kinked or broken beads.

(iii) *Clearance.*—For retractable landing gears there should be ample clearance between the tires and the landing gear wells or adjacent structure, otherwise jamming of the retracted landing gear may result. This

clearance and the clearance between the tire and fork or other landing gear members should be checked carefully when tires are retreaded because the growth of the original tire and the use of a heavier tread stock may increase the tire diameter and cross section.

(iv) *Treading.*—In treading tires, three basic methods of applying new tread stock to a tire are in use which are known as top capping, full capping, and retreading. In top capping, the tread is buffed across the top of the tire and new tread material known as capping stock is applied. The capping stock has an abrupt bevel and when cured onto the remaining tread material of the tire, the line of contact between the old and new rubber may show, enabling a top cap job to be readily detected in such cases. In the full capping process, the buffing is usually carried down on the shoulders to the sidewall ring to receive the new tread material known as camelback. This material is similar to capping stock except that it is wider and the abrupt bevel is replaced by longer, tapering sides. Since the camelback replaces the old tread from one sidewall ring around to the other, the tire has more of a new tire appearance particularly if the sidewalls to the bead are unbroken or unmarred. In retreading (sometimes called remolding), old rubber is rasped from bead to bead and replaced with new camelback and sidewall material which results in a new tire appearance. These three methods are in accord with Military Specification MIL–C–7726 which is used by many treading agencies having a reputation for reliable, high-grade work. A recent development is the flex-to-flex retread which can be classified as being in between the full cap and retread process. In this method, a very wide camelback is used and new sidewall material is then applied which reconditions or covers the flex area. This new sidewall material does not extend down to the bead as it does in the full retread method.

Because of the fact that poorly treaded tires may throw the tread material off in service thereby causing an accident or damaging the aircraft, treading work should be given only to agencies having the equipment, knowledge, and ability to tread aircraft tires satisfactorily.

The number of times a tire may be treaded can be determined only by a thorough inspection which would disclose any sidewall bruises, ply separation, broken bead wire, or other defects that indicate the carcass is not sound enough to justify an additional tread. When a carcass has been recapped or retreaded 3 times its airworthiness may be questioned although there have been tires which gave satisfactory performance with more than 3 such treads. The carcass construction, use of rayon or nylon cord, the carcass age and condition, the type of operation involved, etc. should be evaluated collectively before a decision is made as to whether or not a tire should be treated again.

(4) *Tubes.*—Punctured tubes may be repaired by the use of cemented or vulcanized patches. The procedure of making such repairs is substantially identical to that used in connection with automobile tires. The size of the patch should be kept to a minimum and the use of an excessive number of patches, particularly in one area, should be avoided as the weight of the material may contribute to excessive wheel vibration due to tube unbalance. The use of vulcanized patches is recommended because they are considerably more reliable. For such work a reputable local tire repair agency should be engaged. Reinstalled tires should be inflated, deflated, and again inflated to insure that the inner tube is not pinched. A pinched tube will chafe against the walls of the carcass and a thin spot will result in the rubber. In time, the tube wall will leak at this point. The pinching generally is due to the sticking of the tube to the carcass wall during the first inflation and the failure of the carcass to push out to properly seat against the flange. The tube is then confined to a smaller space and wrinkling (pinching) of the tube results. Complete deflation followed by inflation allows the tube to properly accommodate itself to the carcass which should now seat itself tightly against the flanges.

(5) *Floats.*—In order to maintain floats in an airworthy condition, frequent inspection should be made on account of the rapidity with which corrosion takes place on aluminum alloy metal parts, particularly when the aircraft is operated in salt water. Metal floats and all

metal parts on wooden floats should be carefully examined for corrosion and corrective action taken in accordance with the procedures described in section 18.30–7. Damage to metal floats should be repaired in the general manner as outlined in section 18.30–4 (e) pertaining to aluminum and aluminum alloy structures. In the case of wooden floats, repairs should be made in accordance with the general procedure outlined in section 18.30–2.

(6) *Skis and ski installations.*—It is advisable to examine ski installations frequently to keep them maintained in airworthy condition. If shock cord is used to keep the ski runner in proper trim, an examination should be made to see that the cord has enough elasticity to keep the runner in its required attitude and the condition of the cord should be checked to see that it is not becoming loose or badly frayed. If old, weak shock cords are found, they should be replaced. When other means of restraint are provided, they should be examined for excessive wear and binding and replacements should be made when such conditions are found. The points of cable attachment, both on the ski, and the airplane structure, should be examined for bent lugs due to excessive loads having been imposed while taxiing over rugged terrain or by trying to break frozen skis loose. If skis which permit attachment to the wheels and tires are used, proper tire pressure should be maintained; under-inflated tires may push off the wheels if appreciable side loads are developed in landing or taxiing.

(i) *Repair of ski runners.*—Fractured wooden ski runners usually require replacement. If a split at the rear end of the runner does not exceed 10 percent of the ski length, it may be repaired by attaching one or more wooden cross pieces across the top of the runner using glue and bolts. Bent or torn metal runners may be straightened if minor bending has taken place and minor tears may be repaired in accordance with procedures recommended in section 18.30–4 relative to repairs of metal structures.

(ii) *Ski pedestals.*

(*a*) *Tubular pedestals.* — Damaged pedestals made of steel tubing may be repaired by using standard tube splices as shown in figures 4–2 and 4–12.

(*b*) *Cast pedestals.*—Cast pedestals should not be repaired but should be replaced unless the method of repair is specifically approved by a representative of the Civil Aeronautics Administration.

(*c*) *Sheet metal pedestals.*—Damaged pedestals made of aluminum alloy sheet should be repaired in the general manner as outlined in section 18.30–4 (e).

(c) *Flares.*—Parachute flares are made of materials which are subject to decomposition upon aging. Humidity affects the small igniting charge and also the materials of the candle (illuminant). Hence, the percentage of misfires in old flares is likely to be quite high. To assure unfailing performance of flares, periodic inspection of the flare installation should be made. The inspection should include the entire system starting at the release mechanism in the cockpit and ending at the flare. Such inspection should be attempted only by qualified personnel since inadvertent discharge of such pyrotechnics may cause serious damage. Past experience has indicated that all electrically or pistol-operated flares should be returned to the manufacturer for reconditioning within a maximum period of 3 years and that for mechanically operated flares, this should be done within a maximum period of 4 years.

(d) *Life preservers and life rafts.*

(1) *General.*—Inflatable life preservers and life rafts are subject to general deterioration due to aging. Experience has indicated that such equipment may be in need of replacement at the end of 5 years due to porosity of the rubber-coated material. Wear of such equipment is accelerated when stowed on board aircraft because of vibration which causes chafing of the rubberized fabric. This ultimately results in localized leakage. Leakage is also likely to occur where the fabric is folded because sharp corners are formed. When these corners are in contact with the carrying cases, or with adjacent parts of the rubberized fabric, they tend to wear through due to vibration.

(2) *Inspection procedure for life preservers.*—At 3-month intervals, all life preservers should be inspected for airworthiness. The rubberized material should be examined for cuts, tears, and abrasions and the mouth valves and tubing should be checked for leakage, cor-

rosion, and deterioration. The carbon dioxide cylinder should be removed and the discharge mechanism checked by operating the lever to ascertain that the pin operates freely. The gaskets and valve cores of the cylinder container and the pull cord should be checked for deterioration. If no defects are found, the preserver should be inflated by air to a 2-pound pressure and left for 12 hours. If the preserver still has adequate rigidity at the end of that time, it should be deflated and fitted with CO_2 cylinders having weights not less than that indicated on them by the manufacturer. All cylinders made in accordance with joint Army-Navy Specification No. JAN-C–601 are so stamped and have a minimum permissible weight stamped on them. The use of such CO_2 cylinders is recommended. These cylinders have the five-thirty-second-inch end disc sealed by an electric welding process which is intended to provide a superior seal compared to the older type which makes use of a similar disc surrounded by a thin rubber seal. Inasmuch as the rubber is subject to deterioration, its ability to maintain pressure will likely be affected. Leaky electrically welded seals are very likely to be discovered upon final inspection at the manufacturer's plant. If such a cylinder is up to weight at the end of 3 months, in all probability it will remain so until used whereas the old type with the rubber seal is apt to lose its pressure with age. Having fitted the preserver with an adequately charged cylinder, the preserver should be stamped with the date of inspection as a matter of record and packed into its container.

It is recommended that the above procedure be repeated every 12-month period, useing the CO_2 cartridge for inflation. The carbon dioxide permeates the rubberized fabric at a faster rate than air and will indicate if the porosity of the material is excessive.

(3) *Repair of life preservers.*—Leaks, as disclosed by immersion in soapy water, should be repaired by the use of patches in accordance with the recommendations of the manufacturer. Corroded metal parts should be cleaned and missing or weakened ties replaced by machine stitching in place as originally done by the manufacturer. Weakened lanyards should also be replaced. Life preservers which do not retain sufficient rigidity after the 12-hour period because of general deterioration and porosity of the fabric are beyond economical repair and should be replaced.

(4) *Inspection procedure for life rafts.*—Life rafts should be inspected at 3-month intervals for cuts, tears, or other damage to the rubberized material. If the raft is found to be in good condition, the CO_2 bottle(s) should be removed and the raft inflated with air to a pressure of 2 pounds. The air should be introduced at the fitting normally connected to the CO_2 bottle(s). After at least 1 hour to allow for the air within the raft to adjust itself to the ambient temperature, the pressure should be checked and adjusted, if necessary, to 2 pounds after which the raft should be left to stand for 24 hours. If, after 24 hours, the pressure is less than 1 pound, the raft should be examined for leakage by using soapy water. In order to eliminate pressure variations due to temperature differences at the time the initial and final readings are taken, the raft should be tested in a room where the temperature is fairly constant. If the pressure drop is satisfactory, the raft should be considered as being in an airworthy condition and returned to service after being fitted with correctly charged CO_2 bottles as determined by weighing them. It is suggested that the rafts be marked to indicate the date of inspection and that soapstone be used when folding them preparatory to insertion into the carrying case. Care should be taken to see that all of the raft's required equipment is on board and properly stowed. If the raft lanyard used to prevent the raft from floating away from the airplane is in need of replacement, a lanyard not less than 20 feet long and having a breaking strength of about 75 pounds should be used.

At 18-month intervals the above procedure should be repeated, using the CO_2 bottle(s) for inflation. If a single bottle is used for inflating both compartments, it should be noted whether the inflation is proceeding equally to both compartments. Occasionally the formation of "carbon dioxide snow" may occur in 1 passage of the distributing manifold and divert a larger volume of gas to 1 compartment which may burst if the mattress valve is not open to relieve

the pressure. If the pressure is satisfactory, the raft should be returned to service in accordance with the procedure outlined above.

(5) *Repair of life rafts.*—When leaks due to tears, abrasions, or punctures are found, repairs should be made in accordance with the recommendations of the manufacturer. Partially torn away supporting patches on the tube should be recemented so as to restore the raft to its airworthy condition. Mildewed or weak lanyards should be replaced, particularly those by which the CO_2 bottle is operated. This applies also to the line used to attach the raft to the airplane. All metal parts should be checked for corrosion; cleaned, or repaired if found to be defective. If leaky mattress valves have been found, they should be replaced.

(6) *Rating.*—Ratings of military rafts when used in civil aircraft are shown in the following table. Ratings of the 10-, 15-, and 20-man circular rafts built for civil use are stamped on the rafts by the manufacturer.

Type	Capacity			Specification
	Pounds buoyancy	Men		
		Military	Civil	
A–3 series	1,800	4	6	AF 94–40420
E–2 series	2,500	6	10	AF 94–40618
Mark II	1,000	2	3	Bu Aer M–3R
Mark IV	1,800	4	6	Bu Aer M–3R
Mark VII	2,500	7	10	Bu Aer M–3R

Rafts more than 5 years old are likely to be unairworthy due to deterioration.

(e) *Parachutes.*—With reasonable care, parachutes should last at least 5 years. They should not be carelessly tossed about, left in the airplanes so that they may become wet, or left in open places where they may be tampered with. They should not be placed where they may fall on oily floors or be subject to acid fumes from adjacent battery chargers. When repacking is done as required in Part 43 of the Civil Air Regulations, a careful inspection of the parachute should be made by a qualified parachute technician (rigger). If repairs or replacements of parts are necessary to maintain the airworthiness of the parachute assembly, such work should be done by the original parachute manufacturer or by qualified parachute technicians certificated in accordance with Part 25 of the Civil Air Regulations, Parachute Technician's Certificates or by agencies qualified in accordance with Part 54 of the Civil Air Regulations, Parachute Loft Certificates and Ratings.

(f) *Safety belts.*—The Civil Air Regulations require that when safety belts are to be installed in aircraft after July 1, 1951, such belts must conform to standards established by the Civil Aeronautices Administration. These standards are contained in Technical Standard Order TSO–C22. Safety belts eligible for installation in aircraft may be identified by the marking TSO–C22 on the belt or by a military designation number since military belts comply with the strength requirements of the TSO. Airworthy type certificated safety belts currently in aircraft may be removed for cleaning and reinstalled. However, when a type certificated safety belt is found unairworthy it must be replaced with a TSO–C22 or a new military belt.

The webbing of safety belts, even when mildew proofed, is subject to deterioration due to constant use, cleaning and the effects of aging. The clamping action of the serrations of the commonly used buckle also causes a reduction in strength of the webbing and fraying occurs after long periods of usage. Fraying of belts is an indication of wear and such belts are likely to be unairworthy because they can no longer hold the minimum required tensile load. Differences of opinion as to the airworthiness of a belt can be settled by testing a questionable belt to demonstrate that it will support the required load but such testing usually costs more than a new belt and in addition affects the belt so that it is not as strong after the test as it was before. Airworthy 1-person type certificated belts should be able to withstand a tensile load of 525 pounds and TSO belts should withstand the rated tensile load indicated on the belt label. Most 1-person TSO belts are rated for 1,500 pounds. For 2-person belts the loads should be doubled.

Since type certificated belts will not afford the crash protection provided by a TSO or military belt, such type certificated belts should not be repaired nor should their buckles or end

fittings be reused on safety belts. If replacement of webbing or hardware of TSO or military belts is attempted, parts of identical design and material should be used. The stitch pattern should at least be identical to the original and the number of stitches per inch should be equal to the number used in the original belt. There is no objection to having a greater total length of stitching provided one line of stitches is not placed over another line. Lines of stitching should be at least three-sixteenths inch apart. A record should be kept, preferably in the log book, stating the extent to which the belt was repaired and the date. The original identification marking on the belt, conforming either to that required by TSO–C22, to a deviation from this marking, or to the military designation should be retained. Operators of a fleet of airplanes should follow the above suggestions, but keeping of records of renovations in a log book is impractical since the belts are never associated with any one particular airplane for any length of time. Therefore, in addition to retaining the original identification label and attaching it to the renovated belt, some additional simple marking should be used to indicate that the belt had been renovated. The date of renovation should also be shown. The use of the letter "R" followed by the date would be acceptable. This marking could be in the form of an indelible ink stamping or cloth label stitched to the webbing.

(g) *Fire extinguishers.*—Inspection and maintenance of fire extinguishers should be in accordance with the manufacturer's instructions attached to the extinguisher unit. In connection with carbon tetrachloride extinguishers, owners who desire to refill their own units are cautioned not to refill them with commercial carbon tetrachloride inasmuch as it invariably contains a small percentage of water which ultimately causes corrosion of the moving parts of the extinguisher mechanism. Carbon tetrachloride for refilling fire extinguishers is sold in containers identifying the contents as being intended for such usage.

(h) *Radio equipment.*—For information pertaining to alterations and testing of radio equipment, see sections 18.30–20 and 18.30–21.

(18 F. R. 7413, Nov. 21, 1953, effective Nov. 30, 1953, amended 20 F. R. 7535, Oct. 8, 1955, effective Oct. 31, 1955.)

18.30–10 *Windshields and enclosures.—(CAA policies which apply to section 18.30).*—These repairs are applicable to plastic windshields, enclosures, and windows in nonpressurized airplanes. For pressurized airplanes the plastic elements should be replaced or repaired only in accordance with the manufacturer's recommendations.

(a) *Types of plastics.*—Two types of plastics are commonly used in transparent enclosures of aircraft. These materials are known as acrylic plastics and cellulose acetate plastics.

(1) *Replacement panels.*—Replacement panels should always be of material equivalent to that originally used by the manufacturer of the aircraft. There are many types of transparent plastics on the market. Their properties vary greatly, particularly in regard to expansion characteristics, brittleness under low temperatures, resistance to discoloration when exposed to sunlight, surface checking, etc. These properties have been considered by aircraft manufacturers in selecting materials to be used in their designs and the use of substitutes having different characteristics may result in subsequent difficulties.

(b) *Installation procedures for acrylic plastics.*—In installing a replacement panel, the same mounting method used by the manufacturer of the airplane should be followed. While the actual installation will vary from one type of aircraft to another, the following major principles should be considered in installing any replacement panels.

(1) Never force an acrylic plastic panel out of shape to make it fit a frame. If a replacement panel does not fit easily into the mounting, a new replacement should be obtained or the whole panel heated and reformed. When possible, a new panel should be cut and fitted at ordinary room temperature.

(2) In clamping or bolting acrylic plastic panels into their mountings, do not place the plastic under excessive compressive stress. It is easy to develop more than 1,000 pounds per square inch on the plastic by drawing up a nut and bolt good and tight. Each nut should be tightened to a firm fit then backed off one full turn.

(3) In bolt installations, spacers, collars, shoulders, or stop-nuts should be used to pre-

vent tightening the bolt excessively. Whenever such devices are used by the airplane manufacturer they should be retained in the replacement installation. It is important that the original number of bolts, complete with washers, spacers, etc., be used.

When rivets are used, adequate spacers or other satisfactory means to prevent excessive tightening of the frame to the plastic should be provided.

(4) Acrylic plastic panels should be mounted between rubber, cork, or other gaskets to make the installation waterproof, to reduce vibration, and to help to distribute compressive stresses on the plastic.

(5) Acrylic plastics expand and contract approximately three times as much as the metal channels in which they are mounted. Therefore, suitable allowance for dimensional changes with temperature should be made. Clearances of one-eighth-inch minimum should be allowed around the edges of small panels and larger clearances around the edges of large panels.

(6) In installations involving bolts or rivets, the holes through the plastic should be oversize by one-eighth-inch diameter and centered so that the plastic will not bind or crack at the edge of the holes. The use of slotted holes is also recommended.

(7) Panels should be mounted to a sufficient depth in the channel to prevent falling out when it contracts at extremely low temperatures or when the panel is flexed. When the manufacturer's original design permits, panels up to 12 inches long should be mounted to a minimum depth of 1⅛ inches.

(c) *Installation procedure for cellulose acetate plastics.*—In general, the methods used for installation of cellulose acetate plastics are similar to those used for acrylic plastics. The coefficient of expansion of cellulose acetate exceeds that of acrylic resins. Also, the cellulose acetate plastics are affected by moisture and will change dimensionally as they absorb water. Therefore, allowance should be made in mounting this type plastic if wide variations in temperature and humidity are to be encountered. As a general rule an allowance of about one-eighth-inch per foot of panel length should be made for expansion and three-sixteenths-inch per foot for contraction.

(d) *Repair of plastics.* Extensively damaged transparent plastic should be replaced rather than repaired whenever possible since even a carefully patched part is not the equal of a new section, either optically or structurally. At the first sign of crack development, a hole of one-eighth to three-sixteenths of an inch in diameter should be drilled at the extreme ends of the cracks as shown in figure 10–1. This serves to localize the cracks and to prevent further splitting by distributing the strain over a large area. If the cracks are small, stopping them with drilled holes will usually suffice until replacement or more permanent repair can be made. The following repairs are permissible; however, they should not be located in the line of the pilot's vision in normal flight and landing.

(1) *Surface patch.*—If a surface patch is to be installed, trim away the damaged area and round all corners. A piece of plastic of sufficient size to cover the damaged area and extend at least three-fourths of an inch on each side of the crack or hole should be cut and the edges beveled as shown in figure 10–2. If the section to be repaired is curved, the patch should be fitted to the same contour by heating it in an oil bath at a temperature of 248° to 302° F. or it may be heated on a hot plate until soft. Boiling water should not be used for heating. The patch should be coated evenly with plastic solvent adhesive and placed immediately over the hole. A uniform pressure of from 5 to 10 pounds per square inch should be maintained on the patch for a minimum of 3 hours. The patch should be allowed to dry 24 to 36 hours before sanding or polishing is attempted.

(2) *Plug patch.*—In using inserted patches to repair holes in plastic structures, the holes should be trimmed to a perfect circle or oval and the edges beveled slightly. The patch should be slightly thicker than the material being repaired and should have similarly beveled edges. Patches should be installed in accordance with figure 10–3. The plug is heated until soft and pressed into the hole without cement, and allowed to cool, making a perfect fit. The plug should be removed, the edges coated with adhesive and then reinserted in the hole. A firm light pressure should be main-

tained until the cement has set. Sand or file the edges level with the surface, buff and polish.

(e) *Cleaning and polishing transparent plastic.*—Plastics have many advantages over glass for aircraft use, but they lack the surface hardness of glass and care must be exercised while servicing the aircraft to avoid scratching or otherwise damaging the surface.

Plastic should be cleaned by washing with plenty of water and mild soap, using a clean, soft, grit-free cloth, sponge, or bare hands. Do not use gasoline, alcohol, benzene, acetone, carbon tetrachloride, fire extinguisher or deicing fluids, lacquer thinners, or window cleaning sprays because they will soften the plastic and cause crazing. The plastic should not be rubbed with a dry cloth since this is likely to cause scratches and also build up an electrostatic charge which attracts dust particles to the surface. If after removing dirt and grease, no great amount of scratching is visible, the plastic should be finished with a good grade of commercial wax. The wax should be applied in a thin even coat and brought to a high polish by rubbing lightly with a soft cloth.

If, after removing dirt and grease, the surface is found marred by scratches, hand polish or buff out the scratches. Hand-polishing or buffing should not be attempted until the surface is clean. A soft, open-type cotton or flannel buffing wheel is suggested. Minor scratches may be removed by vigorously rubbing the affected area by hand or with a soft, clean cloth dampened with a mixture of turpentine and chalk or an automobile cleanser applied with a damp cloth. Remove the cleanser and polish with a soft, dry cloth. Acrylic and cellulose acetate plastics are thermoplastic and friction created by buffing or polishing too long in one spot can generate sufficient heat to soften the surface. This will produce visual distortion and should be guarded against.

(18 F. R. 7416, Nov. 21, 1953, effective Nov. 30, 1953.)

18.30–11 *Hydraulic systems.—(CAA policies which apply to section 18.30).*—Airplane hydraulic systems should be maintained, serviced, and adjusted in accordance with manufacturer's maintenance manuals and pertinent component maintenance manuals. Certain general principles of maintenance and repair which apply are outlined below.

(a) *Hydraulic lines and fittings.*—All lines and fittings should be carefully inspected at regular intervals to insure airworthiness. Metal lines should be checked for leaks, loose anchorages, scratches, kinks, or other damage. Flexible hose lines should be checked for leaks, cuts, abrasions, soft spots, or other deterioration or damage. Fittings and connections should be inspected for leakage, looseness, cracks, burrs, or other damage. Defective elements should be replaced but may sometimes be repaired.

(1) *Replacement of metal lines.*—When inspection shows a line to be damaged or defective, the entire line should be replaced. However, if the damaged section is localized, a repair section may be inserted. In replacing lines, always use tubing of the same size and material as the original line. Use the old tubing as a template in bending the new line, unless it is too greatly damaged, in which case a template can be made from soft iron wire. Soft aluminum tubing (2SO, 3SO, or 52SO) under one-fourth inch outside diameter may be bent by hand. For all other tubing, an acceptable tube bending, hand or power, tool should be used. Bending should be done carefully to avoid excessive flattening, kinking, or wrinkling. Minimum bend radii should conform to the values shown in table 11–1. A small amount of flattening in bends is acceptable but should not exceed an amount such that the small diameter of the flattened portion is less than 75 percent of the original outside diameter. When installing the replacement tubing it should line up correctly with the mating part and should not be forced into line by means of the coupling nuts.

(2) *Tube connections.*—Most tubing connections are made using flared tube ends, and standard connection fittings: AN–818 nut and AN–819 sleeve. In forming flares, the tube ends must be cut square, filed smooth, have all burrs and sharp edges removed and be thoroughly cleaned. The tubing is then flared using the correct forming tools for the sizes of tubing and type of fitting. A double flare is used on soft aluminum tubing three-eighths inch outside diameter and under, and a single flare on all other tubing. In making the connections hydraulic fluid only should be used

as a lubricant. The connection should then be tightened as overtightening will damage the tube or fitting, and may cause failure, and undertightening may cause leakage.

(3) *Repair of metal tube lines.*—Minor dents and scratches in tubing may be repaired. Scratches or nicks no deeper than 10 percent of the wall thickness in aluminum alloy tubing only, not in the heel of a bend, may be repaired by burnishing with hand tools. Severe die marks, seams or splits in the tube should not be repaired; such lines should be replaced. Any crack or deformity in a flare is also unacceptable and should be rejected.

A dent less than 20 percent of the tube diameter is not objectionable unless it is in the heel of a bend. Dents may be removed by drawing a bullet of proper size through the tube by means of a length of cable.

A severely damaged line may be repaired, if it is not desired to replace the entire line, by cutting out the damaged section and inserting a repair section consisting of a short section of flared tubing, flaring both ends of the undamaged tube remaining, and connecting with standard unions, sleeves, and tube nuts. If the damaged portion is short enough, the insert tubing may be omitted and the repair made with one union and two sets of connection fittings.

(4) *Replacement of flexible lines.*—When replacement of flexible hose lines is necessary, use the same type, size and length hose as the replaced line. If the hose is of the swaged-end type, the entire assembly should be obtained in the correct size for replacement. If it is of the collet, or sleeve, quick-attachable-end type, the assembly should be made up in accordance with the manufacturer's directions, using the prescribed tools, so that the replacement assembly is of the same size and length as the replaced line. The hose should be installed without twisting by keeping the white line on hose straight. Use only hydraulic fluid for lubricating threads.

A hose should never be stretched tight between two fittings as this will result in overstressing and failure at the ends under pressure. The length of hose should be sufficient to provide about 5 to 8 percent slack.

(b) *Hydraulic components.*—Hydraulic components such as pumps, actuating cylinders, selector valves, relief valves, etc., should be disassembled only for maintenance and overhaul in properly equipped shops by qualified personnel. Manufacturer's recommended practices and replacement parts should be used in overhauling such components. If proper servicing facilities are not available, hydraulic equipment in need of repair or overhaul should be replaced by new or overhauled parts and the removed component sent to a qualified agency for overhaul. In making adjustments to such parts as relief valves, pressure regulating valves, etc., the airplane and component manufacturer's instructions should be carefully followed. Hydraulic filter elements should be inspected at frequent intervals and replaced as necessary.

(18 F. R. 7417, Nov. 21, 1953, effective Nov. 30, 1953.)

18.30–12 *Electrical systems.—(CAA policies which apply to section 18.30).*

(a) *General.*—All electric equipment, electric assemblies, and wiring installations should be frequently inspected for damage, general condition, and proper functioning to assure the continued satisfactory operation of the electric system. The adjustment, repair, overhaul, and testing of all electric equipment and systems should be accomplished in accordance with the recommendations and procedures set forth in Maintenance Instructions, or manuals published by the Aircraft and Equipment Manufacturers.

(b) *Inspection and operating checking.*—Frequent visual inspections, operating checks of all electric circuits and equipment, and replacement or repair when deficiencies are found are effective in minimizing electrical troubles and hazards in airplanes. A suggested list of items to look for during these inspections and the checks to be performed are itemized below:

Damaged or overheated equipment, connections and wiring or worn wiring insulation.

Excessive resistance at high current carrying connections, as determined by millivolt drop test.

Alinement of electrically driven equipment.

Poor electric bonding.

Cleanliness of equipment and connections.

Proper support of wiring and conduit, and satisfactory attachment to the structure.

Tightness of connections, terminals and ferrules.

Continuity of fuses, operation of circuit breakers.

Condition of electric lamps.

Clearance or insulation of exposed terminals.

Adequacy of safety wire, cotter pins, etc.

Operational check of electrically operated equipment such as motors, inverters, generators, batteries, lights, etc.

Voltage check of electric system operation with portable precision voltmeter.

(1) *Cleaning and preservation.*—Frequent cleaning of electric equipment to remove dust, dirt, and grime is recommended. Fine emery cloth may be used to clean terminals and mating surfaces if they appear corroded or dirty. Crocus cloth or very fine sandpaper should be used to polish commutators or slip rings. Emery cloth should not be used on commutators since particles from the cloth may cause shorting and burning.

(i) *Batteries and battery containers.*—[The drain and venting provision for the battery or battery containers should be checked frequently.]

(2) *Miscellaneous check items.*—Frequent checks should be made for miscellaneous irregularities such as loose terminal connections, poorly soldered or loose swaged terminals, missing safety wire, loose quick-disconnects, broken wire bundle lacing, broken or inadequate wire clamps, and insufficient clearance between exposed current-carrying parts and ground. Replacement or repair should be accomplished as a part of routine maintenance.

(c) *Major adjustments.*—Major adjustments of items of equipment such as regulators, generators, contactors, control devices, inverters, and relays should be accomplished outside the airplane on the test stand or test bench where all necessary instruments and test equipment are at hand. The adjustment procedures outlined by the equipment manufacturer should be followed.

(d) *Equipment replacement.* — Damaged, wornout, and defective electric equipment should be replaced with identical items or with equipment equivalent to the original in operating characteristics, mechanical strength, and the ability to withstand the environmental conditions encountered in the operation of the airplane.

(e) *Aircraft electric cable installation.*

(1) *Types of electric cable.*—Aircraft service imposes severe environmental conditions on electric cable. To assure satisfactory service, the cable should be of aircraft quality at least equivalent to that specified in Military Specification MIL–W–5086 (Copper) and MIL–W–7072 (Aluminum).

(2) *Size of electric cable.*

(i) *Criteria for selection.*—The criteria upon which the selection of electric cable size should be based, when considering an alteration, are current carrying capacity and voltage drop.

(*a*) The selected cable should not carry current continuously or intermittently in excess of the ampere values indicated by curves 1, 2, and 3 on figure 12–1.

(*b*) The voltage drop in the main power cables from the generation sources, or the battery to the bus should not exceed 2 percent (2.0%) of the regulated voltage, when the generator is carrying rated current or the battery is being discharged at the 5-minute rate.

(*c*) The voltage drop in the load circuits, between the bus and the utilization equipment, should not exceed the values shown in the following tabulation:

Nominal system voltage	Allowable voltage drop	
	Continuous operation	Intermittent operation
14	0.5	1
28	1	2
115	4	8
200	7	14

(ii) *Electric cable chart.*—This chart, figure 12–1, applies to cable carrying direct current and is based on copper conductor cable manufactured in accordance with Specification MIL–W–5086, whose current ratings are given in Specification MIL–W–5088. Curves 1, 2 and 3 thereon intersect the vertical cable size lines at the maximum ampere rating for the specified conditions indicated on the chart.

(*a*) *Examples of how to use the electric cable chart—Figure 12–1.*

(*1*) *Knowing the cable length and ampere load.*—Determine the required cable size so as not to exceed one volt drop as follows: Select the cable length from the scale at the left and follow it horizontally across the chart to the right until it intersects the required diagonal ampere line. Then read the cable size on the nearest or preferably the nearest vertical cable size line to the right.

Example: Measured cable length 50 feet, continuous current 25 amperes—determine cable size. From the left scale follow horizontal line 50 chart to the right until it intersects the diagonal 25-ampere line. The 25-ampere line is slightly more than midway between the 20- and 30-ampere lines since the scale is logarithmic. The vertical cable size to the right of this intersection is numbered 8, and therefore a No. 8 cable size will be needed. Note also that the point of intersection is above curve 1, indicating that No. 8 cable wire will carry 25 amperes in conduit or bundles without overheating.

(*2*) *Knowing the cable size and ampere load.*—Determine the maximum cable length so as not to exceed one volt drop as follows: Select the cable size from the scale at the bottom of the chart and follow the vertical cable size line until it intersects the required diagonal ampere line. Then read the maximum distance in feet that the cable can be run, by horizontally projecting the point of intersection to the scale at the left.

Example: Cable size No. 2, continuous current 150 amperes, determine maximum cable length in feet. From the bottom scale follow the No. 2 vertical cable size line until it intersects the diagonal 150-ampere line. Projecting this point horizontally to the scale at the left it is determined that 38 feet is the maximum distance that the No. 2 cable carrying 150 amperes can be run without exceeding one-volt drop. It should be noted, however, that the point of intersection falls below Curve 1 and if the cable is to be installed in a close fitting conduit or even a large bundle it would be preferable to use a No. 1 or No. 1/0 cable, depending on the known factors of the installation. Naturally the maximum distance that these larger cables can be run without exceeding one-volt drop will also be greater than that previously determined for the No. 2 cable.

(*3*) *For other than one-volt drop:*

Examples: Determine cable size for various voltage drops, measured cable length 100 feet, continuous current 20 amperes; also determine maximum cable lengths in feet for various voltage drops, using cable size No. 10, continuous current 20 amperes.

(iii) *Resistance.*—The resistance of the current return path through the aircraft structure is always considered negligible. However, this is based on the assumption that adequate bonding of the structure or a special electric current return path has been provided which is capable of carrying the required electric current with a negligible voltage drop. The measured resistance from the ground point of a generator or the battery to the ground terminal of any electric device should not exceed 0.005 ohm.

Voltage drop	Enter chart (feet)	Amperes	Cable size from chart	Check
1	100	20	No. 6.....	VD=(.000436)[b] (100) (20)=.872
0.5	$\frac{100}{0.5}=200$	20	No. 4.....	VD=(.000274)[b] (100) (20)=.548
4	$\frac{100}{4}=25$	20	No. 12.....	VD=(.00188)[b] (100) (20)=3.76
7	$\frac{100}{7}=14$	20	No. 14 [a].....	VD=(.00299)[b] (100) (20)=5.98

[a] It should be noted that the No. 14 cable should not be used if a considerable portion of its 100-foot length is to be confined in conduit, large bundles, or locations of high ambient temperature, as the intersection of the cable size and current lines falls below curve 1.

[b] Resistance values from table 12–1.

Voltage drop	Wire size	Amperes	Maximum length (feet) from chart at voltage drop indicated	Check
1	No. 10..	20	45.....	VD=(.0011)[a] (20) (45)=.990
0.5	.....	.....	(45) (.5)=22.5....	VD=(.0011)[a] (20) (45)=.495
4	.....	.....	(45) (4)=180.....	VD=(.0011)[a] (20) (45)=3.96
7	.....	.....	(45) (7)=315.....	VD=(.0011)[a] (20) (315)=6.93

[a] Resistance values from table 12–1.

(iv) *Aluminum cable.*—From table 12–1 and 12–2 it will be noted that the conductor resistance of aluminum cable and that of copper cable two numbers higher are similar. Accordingly, the electric cable chart, figure 12–1, can be used when it is desired to substitute aluminum cable and the proper size can be selected

by remembering to reduce the copper cable size by two numbers and by referring to table 12–2. The use of aluminum cable sizes smaller than No. 6 is not recommended.

(3) *Cable terminals.*—Cable terminals are attached to the ends of electric cable to facilitate connection of the cable to junction boxes, terminal strips or items of equipment. The tensile strength of the cable to terminal joint should be at least equivalent to the tensile strength of the cable itself, and its resistance should be negligible relative to the normal resistance of the cable run. Terminals are available which were specifically designed for use with the standard sizes of aircraft cable. Haphazard choice of commercial terminals may lead to overheated joints, vibration failures, and corrosion difficulties.

(i) *Solder vs. solderless terminals.*—The solderless (crimp-type) terminals have largely replaced the older solder lugs for most applications. Some of the disadvantages of the soldering process are listed as follows:

(*a*) A more skilled operator is required.
(*b*) A corrosive flux may be used, and the terminal joint will rapidly deteriorate.
(*c*) Maintenance is extremely difficult.
(*d*) The cable strands are stiffened by the solder, and become more susceptible to breakage by vibration.
(*e*) The cable insulation may be charred during the soldering process.

(ii) *Solderless terminal joints.*—The terminal manufacturer will normally provide a special crimping or swaging tool for joining the solderless terminal to the electric cable. Aluminum cable presents special difficulty in that each individual cable strand is insulated by an oxide coating. The oxide coating must be broken down in the crimping process and some method employed to prevent its reforming. In all cases, the terminal manufacturer's instructions should be carefully followed.

(iii) *Attachment of terminals to studs.*—Electrical equipment malfunction has frequently been traced to poor terminal connections at terminal boards. Loose, dirty, or corroded contact surfaces will produce localized heating which may ignite nearby combustible materials, or overheat adjacent cable insulation to the smoking point. Heavy current-carrying connections should be available for periodic inspection to determine their condition.

(4) *Terminal strips.*—Cable runs are usually joined at terminal strips. The terminal strip should be fitted with barriers to prevent terminals on adjacent studs from coming in contact with each other. The studs should be anchored against rotation and be long enough to accommodate a maximum of four terminals. When more than 4 terminals are to be connected together, 2 or more adjacent studs should be used, and a small strip-metal bus mounted across the studs. In all cases, the current should be carried by the terminal contact surfaces, and not by the stud itself.

(i) *Terminal strip stud sizes.*—If the stud size is too small, it is easily sheared during servicing by applying too much torque on the nut. After a few failures of this sort, the electrician will become overcautious and not tighten the nut sufficiently, and a hazardous loose connection will result. Consequently, it is good practice to limit stud sizes to No. 10 or larger.

(ii) *Terminal strip installation.*—Terminal strips should be designed or mounted in such a manner that loose metallic objects cannot fall across the terminals or studs. It is good practice to provide at least one spare stud for future circuit expansion, or in case a stud is broken.

(5) *Connector assemblies.*—Connectors (plugs and receptacles) are used to facilitate maintenance when frequent disconnection is required in service. Since the cable is soldered to the connector inserts, the joints should be individually insulated and the cable bundle firmly supported to avoid damage by vibration. Connectors have been particularly vulnerable to corrosion in the past, due to condensation of moisture within the shell. Special connectors with water-proofing features have been developed, and a chemically inert water-proof jelly is sometimes packed in the connector, to combat the corrosion difficulty.

(i) *Connector assembly application.*—When two or more connectors are installed ad-

jacent to each other, the design should be such that a plug cannot be inserted in the wrong receptacle. The socket-type insert should be used on that half of the connector which is "hot" after the connector is disconnected.

(6) *Through bolts.*—Through bolts are sometimes required to make feeder connections through bulkheads, fuselage skin or firewalls. Such bolts should be mounted in such manner that they are mechanically secure independent of the terminal mounting nuts. Sufficient cross-section should be provided to insure adequate conductivity against overheating, and the contact surface area should be large enough to minimize voltage drop. Particular care should be exercised to avoid dissimilar metals among the terminal mounting hardware.

(7) *Splices in electric cable.*—Splicing of electric cable should be kept to a minimum, and avoided entirely in locations subjected to extreme vibrations. Soldered splices are particularly brittle and should not be used. When a mechanical (crimped or swaged) splice is used, it should be covered by insulating tubing which is supported at both ends to prevent any motion which will tend to disconnect the splice. Multiple splices in a cable bundle should be staggered along the cable run.

(8) *Wiring installation practice.*

(i) *General.*—Electric wiring may be installed in aircraft without special enclosing means (open wiring) or may be confined in conduit or ducts to provide additional mechanical protection. Open wiring offers the advantages of ease of installation, simple maintenance, and reduced weight. However, conduit or ducting (preferably made of an insulating fire-resistant material) should be considered for the following situations.

(*a*) To minimize the possibility of a cable fault which would result in the loss of the electrical system, or render essential electrical equipment inoperative.

(*b*) To protect the cable from detrimental substances such as hydraulic fluid or gasoline.

(*c*) To protect the cable from abrasion or damage by moving aircraft elements, such as aircraft control cables or shifting cargo.

(ii) *Open wiring installation.*

(*a*) *Cable bundles.*—To simplify maintenance and to minimize the damage that may result from a single fault, cable bundles should be limited as to the number of wires in the run. Shielded cable, ignition cable, and cable which is not protected by a circuit breaker or fuse should be routed separately. The bending radius should not be less than 10 times the outer diameter of the bundle, to avoid excessive stresses on the cable insulation.

(*b*) *Insulating tubing.*—Soft insulating tubing (spaghetti) cannot be considered as mechanical protection against external abrasion of cable, since at best it provides only a delaying action. Conduit or ducting should be employed in such cases.

(*c*) *Clamping of cable bundles.*—Clamps, preferably of non-metallic material, should be used to support the cable bundle along the run. Lacing may be used between clamps, but should not be considered as a substitute for adequate clamping. Adhesive tapes are subject to age deterioration and therefore should not be used as a clamping means.

(*d*) *Clamp installation.*—Clamps should be installed in such manner that the cables do not come in contact with other parts of the aircraft when subjected to vibration. Sufficient slack should be left between the last clamp and the electrical equipment to prevent strain at the cable terminals, or to minimize adverse effects on shock-mounted equipment. Where cables pass through bulkheads or other structural members, a grommet or suitable clamping should be provided to prevent abrasion.

(*e*) *Separation from flammable fluid lines.*—An arcing fault between an electric cable and a metallic flammable fluid line may puncture the line and result in a serious fire. Consequently, every effort should be made to avoid this hazard by physical separation of the cables from lines or equipment containing oil, fuel, hydraulic fluid, or alcohol. When separation is impractical, the electric cable should be placed above the flammable fluid line and securely clamped to the structure. In no case should the cable be clamped to the flammable fluid line.

(iii) *Conduit installations.*—Conduit is available in metallic and non-metallic materials and in both rigid and flexible forms. Primar-

ily its purpose is for mechanical protection of the cable within, although some radio interference shielding may be provided.

(a) *Size of conduit.*—When selecting conduit size for a specific cable bundle application, it is common practice to allow for ease in maintenance and possible future circuit expansion by specifying the conduit inner diameter about 25 percent larger than the maximum diameter of the cable bundle. Large conduit sizes should be avoided, since simultaneous damage to many cables is possible and maintenance becomes difficult.

(b) *Conduit fittings.*—From the abrasion standpoints, conduit is vulnerable at its ends. Suitable fittings should be applied to conduit ends, in such manner that a smooth surface comes in contact with the cable within. Conduit should be supported by clamps along the conduit run.

(c) *Conduit installation.*—Many of the past troubles with conduit can be avoided by proper attention to the following design details:

(1) Conduit should not be located where operating or maintenance personnel would use it as a hand hold or foot step.

(2) Drain holes should be provided at the lowest point in a conduit run. Drilling burrs should be carefully removed.

(3) Conduit should be adequately supported to prevent chafing against structure, and to avoid stressing its end fittings.

(iv) *Wiring identification.*—To facilitate installation and maintenance, all wiring should be indelibly marked for identification. Any consistent numbering system is considered adequate. The identification marking should be placed at each end of the cable, and also, preferably, at intervals along the length.

(f) *Junction boxes and enclosures.*

(1) *Junction box construction.*—Junction boxes should be made from a fire-resistant, nonabsorbent material, such as aluminum alloy or an acceptable plastic material. Where fireproofing is necessary, a stainless steel junction box is recommended. A rigid construction will prevent "oil-canning" of the box sides, which may result in internal short circuits. In all cases drain holes should be provided.

(2) *Internal arrangement.*—The junction box should be designed to permit easy access to all installed items of equipment, terminals and cable. Where marginal clearances are unavoidable, an insulating material should be interposed between current carrying parts and any grounded surface. It is not good practice to mount equipment on the covers or doors of junction boxes, since inspection of internal clearance is impossible when the door or cover is in the closed position.

(3) *Junction box installation.*—It is desirable to mount junction boxes with their open side facing downward, so that loose metallic objects, such as washers or bolts, will tend to fall out of the junction box, rather than wedge between terminals.

(4) *Junction box wiring.*—The original layout of the junction box should take into consideration the necessity for adequate wiring space, and possible future additions. Electric cable inside the box should be laced or clamped in such manner that terminals are not hidden, relay armatures are not fouled, and motion relative to any equipment is prevented. Entrance openings for cable should be protected against chafing by grommets or other means.

(g) *Bonding.*

(1) *General.*—Bonding is defined as the process of electrically connecting the various metallic parts of the airplane, to achieve one or more of the following:

(i) A low resistance ground path for electrical equipment, thereby eliminating grounds wires.

(ii) A reduction in radio interference.

(iii) Less probability of lightning damage to such airplane elements as control hinges.

(iv) Prevention of the buildup of static charges between parts of the airplane, which may be a fire hazard.

(2) *Bonding jumper installations.*—Bonding jumpers should be as short as practicable, and installed in such manner that the resistance of each connection does not exceed .003 ohm. Reasonable access for maintenance should be provided. The jumper should not interfere with the operation of movable aircraft elements, such as surface controls, nor should normal movement of these elements result in damage to the bonding jumper.

(i) *Bonding connections.*—To assure low-resistance connections, nonconducting finishes, such as paint and anodizing films, should be carefully removed from the attachment surface under the bonding terminal.

(ii) *Corrosion prevention.* — Electrolytic action may rapidly corrode a bonding connection, if suitable precautions are not taken. Aluminum alloy jumpers are recommended for most cases, except that copper jumpers are used to bond together parts made of stainless steel, cadmium plated steel, copper, brass or bronze. Where contact between dissimilar metals cannot be avoided, the choice of jumper and hardware should be such that corrosion is minimized, and the part likely to corrode would be the jumper or associated hardware. At locations where finishes were removed, a protective finish should be applied to the completed connection to prevent subsequent corrosion.

(iii) *Bonding jumper attachment.*—The use of solder to attach bonding jumpers should be avoided for the same reasons outlined previously in reference to electric cable terminals. Tubular members should be bonded by means of calmps to which the jumper is attached. Proper choice of clamp material, to match the tube material, will minimize corrosion.

(3) *Ground return connections.*—When bonding jumpers will carry substantial ground return current, it should be determined that the current rating of the jumper is adequate, and that a negligible voltage drop is produced.

(4) *Insulation of electrical equipment from ground.*—In some cases, a unit of electrical equipment is connected into a heavy current circuit, perhaps as a control device, or relay. Such equipment should be insulated from the mounting structure, since grounding the frame of the equipment may result in a serious ground fault in the event of internal failure of the equipment. If a ground connection for a control coil must be provided, a separate small-gage wire may be used.

(18 F. R. 7418, Nov. 21, 1953, effective Nov. 30, 1953.)

[(h) *Anticollision light installations.*—Installation of anticollision lights [9a] should be accomplished in accordance with the following:

[(1) *Color.*—The color of the anticollision light should be aviation red.[9b]

[(2) *Performance.*—The flash frequency should be between 40 and 100 flashes per minute. Where two lights are used (one on top and the other on the bottom of the aircraft), the flash frequency in the overlap region may exceed 100 flashes per minute. In all cases, the on-off ratio of the flash should not be less than 1:75.

[(3) *Location.*—The anticollission light should be located on top of the fuselage or vertical tail where obstruction to the light rays is least. If no top fuselage or vertical tail location is practicable without an adverse effect on crew vision, a bottom fuselage location is permissible.

[(4) *Crew vision interference.*—Irrespective of location, direct or reflected light rays (from propeller disc, nacelle, or wing surface) should not interfere with crew vision. Acceptable methods of preventing such interference include:

[(i) Masking of the light assembly to block undesired light output. Masks for this purpose should be of a permanent type.

[(ii) Application of non-reflective surface finishes on surfaces which present a reflection problem.

[A night flight check should be performed by at least a private pilot (appropriately rated for the aircraft) to assure that any objectionable interference has been eliminated. A notation to that effect should be entered by this pilot in the aircraft log.

[(5) *Electrical modification.*

[(i) *Wiring practice.*—For general wiring practice information, refer to paragraphs (a) through (g) of this section.

[(ii) *Circuit protection.*—A circuit breaker or fuse should be installed as near as practicable to the main bus. The rating of this protective device should be such as to prevent overheating of the wire serving the anticollision light. A five ampere fuse or circuit breaker will protect AN20 gage copper wire; a ten ampere fuse or circuit breaker will protect AN18 and AN16 copper wire.

[(iii) *Generator capacity.*—Anticollision

[9a This policy applies only to aircraft for which an application for type certificate was received prior to Apr. 1, 1957. Subsequent type certificated aircraft are governed by the pertinent Civil Air Regulations effective Apr. 1, 1957.

[9b Aviation red is defined in the CAR as the color which has the International Commission on Illumination chromaticity coordinated below:
y is not greater than 0.335.
z is not greater than 0.002.

lights require up to 100 watts of electric power for their operation. On smaller aircraft, this could be a significant percentage of the total generated power, such that the generator may no longer be capable of recharging the storage battery. The criterion for adequate generator capacity on small aircraft is contained in paragraph (i) of this section. In all cases, the electric power system, during any probable operating condition, should be capable of supplying the additional load without thermal or electrical distress.

(iv) *Anticollision light switch.*—An individual switch (independent of the switch controlling the position lights) should be installed to permit the crew to switch off the anticollision light when reflections from haze or overcast become troublesome. The switch should be identified and marked as to method of operation.

(6) *Structural modification.*

(i) The simplest fuselage installation involves attachment of the light to a skin panel and stringers. A reinforcement doubler should be used on the inner face of the fuselage skin of equivalent thickness (.032 in. minimum) and material strength to the existing skin material. A typical installation is shown in figure 12–2.

(ii) For those installations wherein a light formed angle stringer is cut and partially removed, the reinforcement doubler should be positioned between the skin and the frame, should extend lengthwise beyond the adjacent fuselage frames and be equivalent to the stringer in thickness. The distance between the lamp and the edge of the doubler should be twice the height of the doubler flange. A typical installation is shown in Figure 12–3.

(iii) Engineering evaluation is required for installations involving the cutting of complex formed or extruded stiffeners, fuselage frames, or installations in the pressurized compartment of pressurized aircraft.

(iv) Fin tip installations may be made on aircraft if the fin tip fairing is large enough in cross section to accommodate the light installation and the aircraft flutter characteristics are not adversely affected. Such an installation should be located near a fin spar and formers may be required to stiffen the fin tip fairing near the light. A typical installation is shown in figure 12–4. Rudder installations are usually not recommended because of possible structural difficulties. However, if such installations are considered, an engineering evaluation should be made to determine whether the added mass of the light installation will adversely affect the flutter characteristics of the tail surfaces.

(i) *Electrical load limits.*—When electrical equipment is added to an aircraft, it should be determined that the installed generator-battery system can accommodate the additional load safely. Where necessary, an electrical load analysis should be conducted for substantiation. On aircraft fitted with less than 2½ KW total generator capacity, an acceptable criterion is that the maximum continuous load [9c] on the electrical system should not exceed 80 percent of total generator rating. On such aircraft, the maximum continuous load may be determined within reasonable limits by the following method.

First, check the aircraft battery to determine that it is fully charged and in satisfactory condition.

Next, check to determine if an accurate ammeter is installed which measures the current supplied by the battery to the electrical load. An ammeter in the generator feeder wire will not do this. If an accurate ammeter is not provided, it will be necessary to temporarily connect such an ammeter between the battery and the electrical load. An ammeter having an error no greater than 2 percent is acceptable.

Next, with the engine(s) not operating, turn on all equipment which can continuously draw electrical power in flight, such as all radio receivers and transmitters in standby condition, autopilot, navigation lights, instrument lights, pitot heater, cabin heater, electrically driven instruments, and any other electrical equipment which is used continuously in any cruise condition.

Next, read and record the total amount of current drain indicated on the ammeter. Do not operate equipment any longer than necessary to accurately read the ammeter; otherwise, the battery may discharge below nominal rated voltage.

[9c] Continuous loads are those which draw current continuously in flight, such as radio equipment and position lights. Occasional intermittent loads (such as landing gear, flaps, or landing lights) are not considered.

Next, add 10 percent to the ammeter reading recorded in the previous step. (This is to compensate for the additional electrical current which results from the higher voltage supplied by the generator.) The ammeter reading plus 10 percent will give the approximate continuous cruise electrical load. For example, if the ammeter reading shows a current drain of 25 amperes, the approximate cruise load would be 25 amperes plus 10 percent of 25 or 27.5 a.

Next, determine the generator maximum output rating in amperes. Most aircraft generators have a nameplate which shows this rating; however, some generators will show only the nominal voltage of the system and model number. In the latter case, the current rating normally can be determined by reference to the aircraft specifications. In some instances, the aircraft specifications will also show only the model number of the approved generator(s). Under such circumstances, it will be necessary to refer to the generator manufacturer's data for the particular model. In any event, the maximum continuous rating of the generator(s) must be determined accurately.

Next, compute 80 percent of the generator rating and determine that the resultant figure is not less than the maximum continuous load. For example, 80 percent of a 35 ampere rating is 28 amperes. If the maximum continuous load is found to be 27.5 amperes, as in the previous example, it obviously will be within 80 percent of the rated output of the generator.

Note that this method applies only when a modification imposes an additional continuous electrical load on the aircraft, and then only when the total capacity of the generator or generators is less than 2½ kw. (2½ kw. generator capacity represents 178 amperes capacity for a nominal 14 volt generator system and 89 amperes for a nominal 28 volt generator system.) This is strictly a "rule of thumb" method and should not be confused with an electrical load analysis, which is a complete and accurate analysis of the composite aircraft power sources and all electrical loads.

[(j) *Storage battery installations.*

[(1) *Battery installation hazards and means of prevention.*

[(i) *Explosion.*—Electrochemical action in all commercial aircraft storage batteries (lead-acid, nickel-cadmium and silver-zinc) generates hydrogen. If this hydrogen is released to the surrounding atmosphere, an explosive hydrogen-air mixture may accumulate. Each battery cell generates approximately 7 cc. of hydrogen gas (H_2) per ampere-minute as the battery nears full charge. Four percent concentration of hydrogen in air is violently explosive. To provide a margin of safety, the concentration of this gas should be kept below one percent by ventilation which is effective during all flight regimes. The ventilation air flow should be sufficient to cope with any probable charging condition, including those which could result from any malfunction in the charging system. An acceptable method of achieving the necessary ventilation is to enclose the battery in a case which is vented by connection to a point of negative pressure on the aircraft skin. Positive pressure can be added by connecting another vent to a ram-air scoop elsewhere on the aircraft surface. An acceptable alternative would be to locate the battery in a compartment through which sufficient ventilating air naturally flows during flight in such a manner that the hydrogen gas is dumped overboard. Certain nickel-cadmium batteries are so designed that the hydrogen generated within the cell during charging is chemically recombined. If it can be demonstrated that no hydrogen is emitted during any probable charging condition (the probability of overvoltage on the charging system should also be investigated), such nickel-cadmium batteries need not be ventilated for the purpose of explosion prevention.

[(ii) *Noxious fumes.*—When charging rates are excessive, the electrolyte may boil to the extent that fumes containing droplets of the electrolyte are emitted through the cell vents. These fumes may become noxious to crew and passengers. Closed ventilating systems (in which the battery is enclosed and vented as described in (1)(i) above) dispose of any caustic or noxious gases which may be emitted by the battery in flight. When the battery is not case-enclosed, but rather located in a ventilated compartment in the aircraft, the ventilating air should be directed away from passengers and crew.

[(iii) *Electrolyte corrosion.*—Electrolyte spillage or leakage may result in serious corrosion of nearby structure or control elements. Both sulphuric acid and potassium hydroxide are actively corrosive. Electrolyte may be spilled during ground servicing, leaked when cell case rupture occurs, or sprayed from cell vents due to excessive charging rates. A generally satisfactory solution for the leakage problem is to place the battery in a case which can contain the total quantity of electrolyte, or which is provided with an overboard drain. All case and drain surfaces which will come in contact with electrolyte should be treated to prevent corrosion effects. Sprayed electrolyte is normally disposed of by the provisions for closed ventilation. If the battery is not case-enclosed, structural parts near the battery which may be affected should be properly treated. Electrolyte spilled during ground servicing should be neutralized at once with solutions of sodium bicarbonate (for acid electrolyte) or boric acid (for alkaline electrolytes). Residue should be washed off with clean water and the area thoroughly dried.

[(iv) *Battery overheat failure.*—Operation of storage batteries beyond their ambient temperature or charging voltage limits will result in excessive cell temperatures leading to electrolyte boiling, rapid deterioration of the cell and finally to battery failure. Maximum electrolyte temperature should not exceed 115° F. for any operating condition. To avoid overheating, locations where high ambient temperatures are encountered (such as engine accessory compartments) should be avoided. Convection cooling by special means may be used, if necessary. The relation between maximum probable charging voltage and the number of cells in the battery is also significant, since this will determine (for a given ambient temperature and state of charge) the rate at which energy is absorbed as heat within the battery. For lead-acid batteries the voltage per cell should not exceed 2.35 volts. In the case of nickel-cadmium batteries the charging voltage limit varies with design and construction, with values of 1.4 to 1.5 volts per cell found satisfactory. In all cases, the recommendations of the battery manufacturer as to proper charging voltage limits and minimum cooling provisions should be followed. Where battery cooling is marginal, it is permissible to use a thermostatically controlled relay arrangement to prevent battery overheat. This device should open the circuit between bus and battery when a limit temperature is reached but should reestablish the circuit for emergency service when bus voltage is lost.

[(2) *Substitution of nickel-cadmium batteries for lead-acid types.*—Nickel-cadmium batteries may replace lead-acid types when their capacity (at the 5-hour rate) is at least 30 percent of the lead-acid capacity.

[(3) *Battery additives and electrolyte replacements.*—Battery additives or electrolyte replacements may be used if endorsed by the battery manufacturer involved, or if substantiated by a performance test conducted by the user to demonstrate that the additive or replacement will not reduce battery performance. An acceptable performance test would be to compare the capacity of the battery at the 5-minute, 1-hour, and 5-hour discharge rates (using the original electrolyte) with the capacity of the same battery at the same discharge rates using the additive or replacement electrolyte. This test should be conducted at both 0° F. and 75° F. and the additive or electrolyte replacement should be added according to the manufacturer's instructions. If a reduction in performance is noted, the additive or replacement electrolyte is not acceptable.

[(k) *Circuit protection devices.*

[(1) *General.*—Circuit breakers or fuses should in all cases protect the cable and should be located as close as possible to the source bus.

[(2) *Matching protector to cable.*—The circuit breaker or fuse should open the circuit before the cable emits smoke. To accomplish this, the time current characteristic of the protective device should fall below that of the associated cable. In order to obtain maximum utilization of the connected equipment, the circuit protector characteristics should be matched to the cable characteristics as closely as possible.

[(3) *Circuit protector chart.*—Table No. 12-3, Appendix B, may be used as a guide for the selection of circuit breaker and fuse rating to protect copper conductor cable. This chart was prepared for the conditions specified by the

notes which accompany the chart. If actual conditions deviate materially from those stated, ratings above or below the values recommended may be justified. For example, a wire run individually in the open air may possibly be protected by a circuit breaker of the next higher rating to that shown on the chart. In general, the chart is conservative for all ordinary aircraft electrical installations.

[(4) *Circuit breaker type.*

[(i) All resettable type circuit breakers should open the circuit irrespective of the position of the operating control when an overload or circuit fault exists. Such circuit breakers are referred to as "trip free."

[(ii) Automatic reset circuit breakers (which automatically reset themselves periodically) should not be applied as circuit protective devices.]

(22 F. R. 3916, June 5, 1957, effective July 1, 1957; amended in 23 F. R. 1718, Mar. 13, effective Mar. 15, 1958; amended in 23 F. R. 9018, Nov. 20, 1958, effective Dec. 22, 1958; amended in 24 F. R. 1279, effective Feb. 27, 1959.)

18.30–13 *Instruments.—(CAA policies which apply to section 18.30).*

(a) *General.*

(1) *Instrument installation and maintenance.*—Care should be taken with instruments to prevent their accidental damage.

When instruments do not give proper indications, they should be sent to an approved instrument overhaul and repair station or returned to the manufacturer for servicing.

(2) *Vibration insulation.* — Instruments should not be subjected to excessive vibrations. When shock-insulated panels are used, the mountings should be periodically checked for condition and the panels for alinement. When necessary to replace shock mounts, units of the same characteristics should be used. Only flexible connector tubing should be used to join the ends of lines to the instruments. Care should be exercised to insure that the instrument panel does not contact any parts of the airframe when vibrating normally.

(b) *Pitot-static system.*

(1) *System components.* — The conventional design of the pitot-system consists of pitot-static tubes or pitot tubes with static pressure parts and vents, lines, tubing, water drains and traps, selector valves, and various pressure actuated indicators or control units such as the altimeter, air-speed and rate of climb indicators, and automatic pilots connected to the system.

(i) *Pitot-static tube.*—The tube should have its axis parallel to the longitudinal axis of the aircraft when in cruising flight configuration. All repairs and alterations on the pitot-static system should be made in conformance with the manufacturer's recommendations.

(ii) *Static pressure ports or vents.*—All alterations or relocations of the static pressure ports or vents should be made in conformance with the aircraft manufacturer's engineering recommendations. (See applicable sections of section 18.30–13 (a) (1) and (b) (2).)

(iii) *Heater not operative.*—In the types of tubes where the electric element is not replaceable, it becomes necessary to replace the tube. The voltage at the heater terminals should not be less than 85 percent of the rated system voltage.

(iv) *Clogging of pitot-static tube or static vent drains.*—If water or obstructive material has entered the system, all drains should be cleaned. The drains in the pitot-static head should be probed with a fine wire to remove dirt or other obstructions. The bottom static openings act as drains for the head's static chamber and these holes should be checked at

regular intervals to preclude malfunctioning of the system.

CAUTION: Make sure all instruments are disconnected during cleaning procedures.

(v) *Relocation of pitot-static tube.*—If relocation of the pitot-static tube is necessary it should be done in accordance with the manufacturer's recommendations and with due consideration of the following:

(*a*) Freedom of aerodynamic disturbances caused by the aircraft.

(*b*) Location protected from accidental damage.

(*c*) Alinement with the longitudinal axis of the aircraft when in cruising flight configuration.

(2) *Pitot-static lines.*

(i) *Poor drainage of lines.*—If drainage is poor, check the line diameter. If this tubing diameter is less than three-eighths inch outside diameter, it should be replaced with this size tubing to overcome the difficulty, as water will not drain freely in smaller size lines.

(ii) *Replacing the lines.*—If necessary to replace lines, the following installation practices should be observed:

(*a*) Attach lines to airframe at regular intervals by means of suitable clamps.

(*b*) Do not clamp lines at end fittings.

(*c*) Maintain slope of lines toward drains so that proper drainage will be effected.

(*d*) Use thread lubricant on fittings, preventing excess lubricant from entering lines.

(*e*) Check the lines for leaks.

(iii) *Leak testing static lines.*—The static line openings should be connected into a common line to which a manometer or a reliable pressure gage and a suction source is connected. Apply suction equivalent to 1,000 feet altitude (1.05 inches of mercury or 14.24 inches of water) and hold. After 1 minute, the leakage should not exceed the equivalent of 150 feet of altitude (approximately 2.18 inches of water).

CAUTION: Do not apply positive pressure to the static lines. Remove all stops on static vents after tests have been completed.

(iv) *Leak testing pitot lines.*—Seal drain holes, and connect pitot pressure openings to a tee to which a source of pressure and a manometer or reliable airspeed indicator is connected. Apply pressure to cause airspeed to indicate 150 miles per hour and hold it at this point, (0.82 inches of mercury or 11.18 inches of water positive pressure). After 1 minute, the leakage should not exceed the equivalent of 10 miles per hour.

WARNING: Do not apply suction to pitot lines.

(v) *Maintenance of lines.*—Inspection of the lines should be made periodically. Water accumulation can be removed by opening the drain caps on valves. If the installation is not properly self-drained, disconnect the lines from the instruments and carefully "blow" the lines with clean dry air.

(c) *Magnetic direction indicator (compass).*

(1) *Correction for errors in magnetic direction indicator.*

(i) *Swinging the indicator (ground).*—When the magnetic direction indicator does not yield satisfactory directional indications, it can be calibrated by the "ground swinging" technique as follows:

(*a*) Remove aircraft to location free from influence of steel structures, underground pipes and cables, reinforced concrete, or other aircraft.

(*b*) Place the aircraft in level flying position.

(*c*) Remove compensating magnets from chambers or reset the fixed compensating magnets to neutral positions, whichever is applicable, before swinging.

(*d*) Check indicator for fluid level and cleanliness. If fluid is required, it should be added before compensation.

(*e*) Check the pivot friction of indicator by deflecting the card with a small magnet. The card should rotate freely in a horizontal plane.

(*f*) If radio is used in aircraft, there should be corrections noted for "Radio On" and "Radio Off" conditions.

(*g*) Aline the aircraft with the North magnetic heading and compensate with compensating magnets. Repeat for the East magnetic heading. Then place on South and West magnetic headings and remove half of indicated error by adjusting compensators. Engine(s) should be running.

414269 O - 57 - 7

(*h*) Turn the aircraft on successive 30° headings through 360°. Placard should be marked to indicate correction at each 30° heading showing "Radio On" and "Radio Off" corrections.

(ii) *Indicator cannot be properly compensated.*—The pilot's indicator should have deviation of less than 10° at any heading. When this maximum is exceeded, a new location for the indicator should be considered, unless the condition causing the error can be removed permanently.

(iii) *Erratic indications of magnetic indicator.*—If severe deviations are encountered, they may be due to iron or steel items being carried in the aircraft, and located too close to the magnetic direction indicator. Caution must be taken to properly locate articles of this nature away from the vicinity of the indicator.

(18 F. R. 7420, Nov. 21, 1953, effective Nov. 30, 1953.)

18.30–14 *Engines and fuel systems.—(CAA policies which apply to section 18.30).*

(a) *Engines.*—In repairing or overhauling aircraft engines, all repair agencies should be guided by the recommendations and procedures set forth in the respective instruction books, manuals, or service bulletins for the installation, inspection, and maintenance of aircraft engines, published by the aircraft engine manufacturers for each type of engine. Since many details concernings the repair and overhaul of engines differ decidedly for different types and models of engines, no attempt has been made to include such details in this manual. The overhaul period for aircraft engines used in general service operations should be determined from the manufacturer's recommendations with due consideration given to the condition of each engine involved.

(1) *Magnetic, fluorescent penetrant, X-ray, supersonic, and hydrostatic inspections.*—All rotating, reciprocating and other highly stressed parts of all aircraft engines should be subjected to critical inspection at the time of overhaul. This inspection should be supplemented by any of the following procedures whenever recommended in the pertinent engine manufacturer's overhaul or instruction manuals or by CAA directives:

(i) Wet or dry magnetic dust inspection of magnetic materials;

(ii) Wet or dry penetrant inspection of nonmagnetic materials;

(iii) X-ray or supersonic inspection of any material;

(iv) Hydrostatic inspection of bulky parts and assemblies, such as cylinder heads and cylinders.

A copy of the report of the findings of any of these inspections should be appended to the original repair and alteration form in the case of a major repair. Refer to section 18.30–8 (d) (1)–(6) for process details.

(2) *Rebuilt engines.*—A rebuilt engine is defined as a used engine which has been completely disassembled, inspected, repaired as necessary, reassembled, tested, and approved in the same manner and to the same tolerance and limits as a new engine. Component parts of such engines may be either used parts or new parts. The used parts may be either the parts from the same engine or from other service engines, but they must conform to production drawing tolerances and limits to which new parts must conform. In addition, all parts, either new or used, meeting approved oversize and undersize dimensions acceptable for new engines, are also eligible.

(3) *Crankshafts.*—Crankshafts should be carefully inspected for misalinement and if bent beyond the manufacturer's permissible limit for service use, should not be repaired, but should be replaced. Worn journals may be repaired by regrinding in accordance with the manufacturer's instructions. If the original fillets are altered at any time, their radii should not be reduced and their surfaces should be polished free of all tool marks. No attempt should be made to straighten crankshafts damaged in service without consulting the engine manufacturer for appropriate instructions. In no case should an attempt be made to straighten a nitrided crankshaft.

(4) *Replacement parts in certificated engines.*—Only engine parts which are approved by the Civil Aeronautics Administration should be used in making replacements in certificated aircraft engines. This applies also to engine component parts such as magnetos, spark plugs, etc.

(i) Engine parts obtained from war sur-

plus or military stocks are eligible for use providing they are found to meet the prescribed inspection limits; are otherwise in serviceable condition, and were originally acceptable under the military procurement agency's standards.

(ii) Parts for obsolete engines for which new parts are no longer obtainable from the original manufacturer or his successor manufacturer, are sometimes fabricated locally. When it becomes necessary to do this, physical tests and careful measurements of the old part may provide adequate technical information. However, this procedure is usually regarded as a major change which requires engine testing and is not recommended except as a last alternative. Oftentimes, CAA engineering data is available in Washington for obsolete engines and it may be useful in providing information for the foregoing purpose.

(5) *Cylinder hold-down nuts and cap screws.*—Great care is required in tightening cylinder hold-down nuts or cap screws. They must be tightened to close torque limits to prevent improper prestressing and to insure even loading on the cylinder flange. The installation of baffles, brackets, clips, and other extraneous parts under these nuts and cap screws is not considered good practice and should be discouraged. If these baffles, brackets, etc., are not properly fabricated or made of suitable material, they will cause loosening of the nuts or cap screws even though the nuts or cap screws were properly tightened and locked at installation. Either improper prestressing or loosening of any one of these nuts or cap screws will introduce the danger of progressive stud failure with the possible loss of the engine cylinder in flight. Never install parts made from aluminum alloy or other soft metals under cylinder hold-down nuts or cap screws.

(6) *Run-in time.*—After an aircraft engine has been overhauled, it should be run-in in accordance with the pertinent aircraft engine manufacturer's instructions. If no special test stand, test club, and other equipment are available, the engine may be run-in on the aircraft and the aircraft should be headed into the wind during the run-in on the ground so that the maximum cooling effect will be obtained. Proper cooling during run-in cannot be over emphasized. The manufacturer's recommendations concerning engine temperatures and other criteria should be carefully observed.

(7) *Re-use of safetying devices.*—Cotter pins and safety wire should never be used a second time. Flat steel-type wrist-pin retainers and thin lock washers likewise should be replaced, but special coil spring or plug-type retainers need not be replaced at overhaul if the manufacturer's recommendations permit re-use.

(8) *Self-locking nuts for aircraft engines and accessories.*—Self-locking nuts may be used on aircraft engines provided the following criteria are met:

(i) Where their use is specified by the engine manufacturer in his assembly drawing, parts list, and bills of material which are approved by the Civil Aeronautics Administration.

(ii) When the nuts will not fall inside of engine should they loosen and come off.

(iii) When there is at least one full thread protruding beyond the nut.

(iv) If cotter pin or locking-wiring holes are in the bolt or stud, the edges of these holes should be well-rounded to preclude damage to the lock nut.

(v) The effectiveness of the self-locking feature should be checked and found to be satisfactory prior to its re-use.

(vi) Engine accessories should be attached to the engine by means of the types of nuts furnished with the engine. On many engines, however, self-locking nuts are furnished for such use by the engine manufacturer for all accessories except the heaviest, such as starters and generators.

(vii) On many engines, the cylinder baffles, rocker box covers, drive covers and pads, and accessory and supercharger housings, are fastened with fiber insert locknuts which are limited to a maximum temperature of 250° F. inasmuch as above this temperature the fiber will usually char and consequently lose its locking characteristic. On locations such as the exhaust-pipe attachment to the cylinder, a locknut which has good locking features at elevated temperatures will give invaluable service. In a few instances, fiber insert locknuts have been approved for use on cylinder hold-down studs. This practice is not generally recommended since especially tight stud fits to the crankcase

must be provided, and extremely good cooling must prevail so that low temperatures exist at this location on the specific engines for which such use is approved.

(viii) It is necessary that all proposed applications of new types of locknuts or new applications of currently used self-locking nuts must be investigated adequately since most engines require some specially designed nuts. Such specially designed nuts are usually required for one or more of the following reasons:

(*a*) to provide heat resistance;

(*b*) to provide adequate clearance for installation and removal;

(*c*) to provide for the required degrees of tightening, or, locking ability which sometimes require a stronger, specially heat-treated material, a heavier cross-section, or a special locking means;

(*d*) to provide ample bearing area under the nut to reduce unit loading on softer metals;

(*e*) to prevent loosening of studs when nuts are removed. Information concerning approved self-locking nuts and their use on specific engines is usually found in engine manufacturer's manuals or bulletins. If the desired information is not available, it is suggested that the engine manufacturer be contacted.

(9) *Designating converted engines.*— When engine type of model conversions are accomplished (see section 18.1-1 (b) (2)), the engine nameplate should be altered or replaced to include the new official model designation and any other necessary information shown on the pertinent CAA engine specification.

(i) For current engines, information concerning engine modernizing, engine model conversions, and new properly marked nameplates should be obtained from the engine manufacturer.

(ii) For military surplus engines, or old engines for which new nameplates can no longer be secured, the new model designation symbols should be marked, either in the same title block adjacent to the old symbols, or on a plain thin steel plate attached beside the existing plate by at least two of the mounting screws. For engines which were never provided with separate designation plates and have, instead, an integral stamping boss on the crankcase, the new designation symbols should be added thereto, or a stamped thin steel plate may be fabricated and attached thereto. The superseded model designations should be obliterated or enclosed with parentheses. When metal stamps are used, care should be exercised to avoid damage to the engine.

(iii) In some instances, suffix letters should be added to the engine serial number on the nameplate to designate certain alterations or conversions. Such additions should be made when the alteration or conversion is not of sufficient importance to warrant model designation changes. Examples of these letter additions are:

(*a*) Suffix letter "C" on P & W Military R-2000-7 and -11 engines denoting the plain main bearing type main crankcases as indicated on Specification 5E-5;

(*b*) Suffix letters "A," "E," "L," "M," or "P" on Warner Super Scarab Series 50 engines as indicated on Specification E-104;

(*c*) Suffix letter "D" on Continental E185 series engines denoting incorporation of a dampered crankshaft as indicated on Specification E-246.

(iv) Examples of model designation changes are:

(*a*) Pratt and Whitney R-985-AN-1 engine converted to R-985-AN-14B may be redesignated R-985-AN-(1) 14B if it is desired to preserve its former designation. Usually, though, there is no specific reason to preserve prior identities of converted engines.

(*b*) A Continental A-65-8 engine converted to an A-75 engine with flange-type crankshaft should be redesignated an A-75-8F engine. CONTINENTAL SERVICE BULLETIN No. M47-16 discusses the manufacturer's recommended procedures for handling conversions of Continental engines.

(*c*) A Wright R-1820-71 engine, when installed in certificated aircraft, should be redesignated with its civil model designation 702C9GC1 and Type Certificate No. 219. Similarly, a Lycoming O-235-2 engine nameplate should be redesignated O-235-B and Type Certificate No. 229.

(*d*) An R-1830-65 engine, when con-

verted to an R–1830–90D engine, may be designated R–1830–90D and the "65" obliterated.

(v) Some model conversions merely require the addition of the symbols M1 or M2, etc., to the existing designation, e. g., R–2000–7M1 as indicated on Specification 5E–5.

(10) *Welding in the repair of engines.*

(i) *General.*—In general, welding of highly stressed engine parts is not recommended. However, under the conditions given below, welding may be accomplished if it can be reasonably expected that the welded repair will not adversely affect the airworthiness of the engine:

(*a*) when the weld is externally situated so it can be inspected easily;

(*b*) when the part has been cracked or broken as the result of unusual loads not encountered in normal operation;

(*c*) when a new replacement part of obsolete-type engine is not available;

(*d*) when the welder's experience and equipment employed will insure a first quality weld in the type of material to be repaired and will insure restoration of the original heat treat in heat-treated parts. Also refer to section 18.30–4 (b) for information on process details.

(ii) *Welding of minor parts.*—Many minor parts not subjected to high stresses may be safely repaired by welding. Mounting lugs, cowl lugs on cylinders, covers, etc., are in this category. The welded part should be suitably stress-relieved after welding.

(11) *Metallizing.*—Metallizing should not be done on any internal part of an aircraft engine except when it is proved conclusively to the Civil Aeronautics Administration that the metallized part will not adversely affect the airworthiness of the engine. Metallizing the finned surfaces of steel cylinder barrels with aluminum may be accomplished since many engines are originally manufactured in this manner.

(12) *Plating.*

(i) *General.*—Plating may be restored on an engine part when accomplished in accordance with the manufacturer's instructions.

(ii) *Plating of highly stressed parts.*—In general, chromium plating should not be applied to highly stressed engine parts. Certain applications of this nature have been found to be satisfactory. However, the processes to be used should be approved in all details by the Civil Aeronautics Administration. Porous chromium-plated cylinder walls have been found to be satisfactory for practically all types of engines. Dense or smooth chromium plating without roughened surfaces, on the other hand, has not been found to be generally satisfactory. For cylinder bore chromium plating, CAA engineering approval of the process used is required. Information with respect to what agencies are approved for this work may be obtained from the CAA. Dense chromium plating of the crankpin and main journals of some small engine crankshafts has been found to be satisfactory except where the particular crankshaft is already marginal in strength. Refer to section 18.30–7 (b) (2) for further information on plating.

(iii) *Plating of minor parts.*—Plating, including chromium plating, may be utilized to restore worn low-stressed engine parts, such as accessory drive shafts and splines, propeller shaft ends, and the seating surfaces of roller- and ball-type bearing races.

(13) *Corrosion prevention.*—The application of corrosion preventive measures for temporary and dead storage, preservation, pickling, etc., should be accomplished in accordance with instructions issued by the pertinent engine manufacturer. The use of strong solutions which contain strong caustic compounds and of all solutions, polishers, cleaners, abrasives, etc., which might possibly promote corrosive action, should be avoided. Refer to section 18.30–7 for further details.

(14) *Engine accessories.*—Engine accessories should be overhauled and repaired in accordance with the recommendations of the engine manufacturer and the accessory manufacturer.

(b) *Fuel systems.*

(1) *Fuel tanks.*—Welded or riveted fuel tanks that are made of commercially pure aluminum, 3S, 52S, or similar alloys, may be repaired by welding. Tanks made from heat-treatable aluminum alloys are generally assembled by riveting. In case it is necessary to rivet a new piece in place, the patch should

be of the same material as the tank, and a sealing compound that is insoluble in gasoline should be used in the seams. If aromatic fuels are used, special sealing compounds which are resistant to aromatic fuels should be employed.

(i) *Removal of flux after welding.*—It is especially important, after repair by welding, to completely remove all flux in order to avoid possible corrosion. Therefore, promptly upon completion of welding, the tank should be washed both inside and outside with liberal quantities of hot water, and drained. Next, immerse it in either 5 percent nitric or 5 percent sulfuric acid, or fill the tank with this solution (in which case also wash the outside with the same solution). Permit this acid to remain in contact with the weld about 1 hour and then rinse thoroughly with clean fresh water. The efficiency of the cleaning operation may be tested by applying some acidified 5 percent silver nitrate solution to a small quantity of the rinse water that has been used to last wash the weld. If a heavy white precipitate is formed, the cleansing has been insufficient and the washing should be repeated.

(2) *Fuel tank caps, vents, and overflow lines.*—Fuel tank caps should be inspected as to the integrity of the gasket, and vents should be inspected to ascertain that they are clear. Overflow lines should be inspected to ascertain that the integrity of the material and connections are satisfactory. Care should also be taken to ascertain that the vent exit is in proper position.

(3) *Fuel lines.*—Aluminum or aluminum alloy tubing should not be annealed after forming or at overhaul periods as is required practice with copper tubing. Fuel lines should be thoroughly inspected for integrity of end fittings, for bends or kinks beyond recommended bend radii, for foreign material within the lines, and for integrity of the material which could be affected by abrasion, acid, heat, or swelling in the case of rubber impregnated lines. Too sharp bends or kinks, evidence of excessive heat, abrasion, or a change in the material are causes for replacement.

(4) *Fuel strainers and sediment bowls.*—The adjusting nut located at the bottom of the bowl of the fuel strainer should be positively safetied in position. This nut should be tightened only with the fingers. If leakage still occurs, do not tighten with pliers but replace the cork gasket between the glass bowl and the screen. The screens of all strainers should be periodically inspected for foreign material or rupture. Screens should only be replaced by those recommended by the manufacturer as the mesh size affects the fuel flow through them. Sediment bowls should be given frequent inspections for water or solid material.

(18 F. R. 7421, Nov. 21, 1953, effective Nov. 30, 1953.)

18.30–15 *Propellers.—(CAA policies which apply to section 18.30).*

(a) *Inspection of propellers.*

(1) *General.*—The propeller is easily accessible for visual inspection and should always be checked before a flight to determine that no damage has occurred. Propellers should be inspected periodically as recommended or required by maintenance manuals, service bulletins, and airworthiness directives.

(2) *Wood or composition propellers and blades.*—Due to the nature of the wood itself, it is necessary that wood propellers and blades be inspected frequently to assure continued airworthiness. They should be inspected for such defects as cracks, bruises, scars, warp, evidence of glue failure and separated laminations, sections broken off, and defects in the finish. Composition blades must be handled with the same consideration as wood blades.

(i) The fixed-pitch propeller should be removed from the engine at engine overhaul periods. Whenever the propeller is removed, it should be visually inspected on the rear surface for any indication of cracks. When any indications are found, the metal hub should be disassembled from the propeller. The bolts should be inspected for wear and cracks at the head and threads and, if cracked or worn, should be replaced with new AN bolts. The propeller should be inspected for elongated bolt holes, enlarged hub bore, and checks or cracks inside of bore or anywhere on the propeller. Propellers found with any of these defects should not be used until repaired. If no defects are found, the propeller may be reinstalled on the engine. It should first be touched up with varnish at all places where the finish is worn thin, scratched, or nicked. Track and

balance the propeller, and coat the hub bore and bolt holes with some moisture preventive such as asphalt varnish. In case the hub flange is integral with the crankshaft of the engine, final track should be made after the propeller is installed on the engine. In all cases where a separate metal hub is used, final balance and track should be accomplished with the hub installed in the propeller.

(ii) On new fixed-pitch propeller installations the hub bolts should always be inspected for tightness after the first flight and after the first 25 hours of flying. Thereafter, the bolts should be inspected and checked for tightness at least every 50 hours. No definite time interval can be specified, since bolt tightness is affected by changes in the wood caused by the moisture content in the air where the airplane is flown and stored. During wet weather, some moisture is apt to enter the propeller wood through the drilled holes in the hub. The wood swells but, since expansion is limited by the bolts extending between the two flanges, some of the wood fibres are crushed. Later, when the propeller dries out during dry weather or due to heat from the engine, a certain amount of propeller hub shrinkage takes place and the wood no longer completely fills the space between the two hub flanges. Accordingly, the hub bolts become loose.

(iii) In-flight tip failures may be avoided by frequent inspections of the metal cap and leading edge strip, and the surrounding areas. Inspect for such defects as looseness or slipping, separation of soldered joints, loose screws, loose rivets, breaks, cracks, eroded sections, and corrosion. Inspect for separation between metal leading edge and cap, which would indicate the cap is moving outward in the direction of centrifugal force. This condition is often accompanied by discoloration and loose rivets. Inspect tip for cracks by grasping with hand and slightly twisting about the longitudinal blade center line and by slightly bending the tip backward and forward. If leading edge and cap have separated, carefully inspect for cracks at this point. Cracks usually start at the leading edge of the blade. A fine line appearing in the fabric or plastic will indicate a crack in the wood. In all doubtful cases, have the propeller inspected by an authorized propeller repair station or factory service department.

(iv) The wood close to the metal sleeve of wood blades should be examined frequently for cracks extending outward on the blade. These cracks sometimes occur at the threaded ends of the lag screws, and may be an indication of internal cracking of the wood. Blades having such cracks should be returned to the manufacturer. Tightness of the lag screws, which attach the metal sleeve to the wood blade, should be inspected according to the manufacturer's instructions. The shank areas of composition blades next to the metal sleeve should be inspected and protected as for wood blades.

(3) *Metal propellers and blades.*—Metal propellers and blades are generally susceptible to fatigue failure resulting from concentration of stresses at the bottoms of sharp nicks, cuts, and scratches. It is especially necessary, therefore, to frequently and carefully inspect them for such injuries. Propeller manufacturers have published service bulletins and instructions which prescribe the manner in which these inspections should be accomplished.

(4) *Lubrication.*—Controllable pitch propellers should be carefully inspected frequently to determine if all parts are being lubricated properly. It is especially recommended that all lubrication be accomplished at the periods, and in the manner specified by the propeller manufacturer.

(b) *Repair of propellers.*

(1) *General.*—Propellers should be repaired in accordance with the best accepted practices and the latest techniques. Manufacturer's recommendation should in all cases be followed. The Air Agency Certificate number, or name of agency making any repairs, especially on metal tipping, should be stamped or otherwise marked on the repaired propeller. It is recommended that a decalcomania giving both the repair agency's name and Air Agency Certificate number be used for this purpose. It is necessary to mark the name of the manufacturer and model designation on the repaired propeller in the event the original markings were removed during the repair or refinishing operations.

(2) *Wood or composition propellers and blades.*—Wood propellers and blades requiring repair should be carefully examined to be sure that they can be restored to their original airworthy condition. Doubtful cases should be referred to the manufacturer, and the proposed repair should be referred subsequently to a representative of the Civil Aeronautics Administration for approval. Propellers damaged to the following extent are considered unairworthy, and should be scrapped immediately because repair is either impossible or uneconomical:

A crack or deep cut across the grain of the wood.
Split blades.
Separated laminations, except the outside laminations of fixed-pitch propellers.
More screw or rivet holes, including holes filled with dowels, than used to attach the metal leading edge strip and tip.
An appreciable warp.
An appreciable portion of wood missing.
A crack, cut, or damage to the metal shank or sleeve of blades.
Broken lag screws which attach the metal sleeve to the blade.
Oversize shaft hole in fixed-pitch propellers.
Cracks between the shaft hole and bolt holes.
Cracked internal laminations.
Excessively elongated bolt holes.

(i) Repairs to dents, cuts, scars, scratches, nicks, and small cracks parallel to the grain of the wood are classified under section 18.1–1 as minor repairs. Small cracks parallel to the grain should be filled with glue thoroughly worked into all portions of the cracks, dried, and then sanded smooth and flush with the surface of the propeller. This also applies to small cuts. Dents or scars which have rough surfaces or shapes that will hold a filler and will not induce failure may be filled with a mixture of glue and clean, fine, sawdust thoroughly worked and packed into the defect, dried and then sanded smooth and flush with the surface of the propeller. It is very important that all loose or foreign matter be removed from the place to be filled so that a good bond of the glue to the wood is obtained.

(ii) Major repairs as defined in section 18.1–1, include inlay work, replacement of outside lamination of fixed-pitch propellers, repair of elongated bolt holes in fixed-pitch propellers, replacement of tip fabric, repair and replacement of metal tip and leading edge strip, and replacement of all or part of plastic covering. The propeller manufacturer's instructions should be followed in all cases.

(iii) Inlays shown in figure 15–6 of this manual may be used. Inlays should be of the same wood as the propeller blade; i. e., a yellow birch propeller should be inlaid with yellow birch not with white birch, and as near the same specific gravity as possible. Repair joints should conform with figure 15–6 for taper of 10 : 1 from deepest point to feather edge or end of inlay. Measurements are taken along a straight line parallel to the grain or general slope of the surface on thrust and camber face. This rule applies also to the edge repairs. The grain of inlays should extend in the same direction as the grain of the propeller laminations. Inlays should be made with a fishmouth, scarf, or butt joint. The permanency of the joint is in the order named, the fishmouth being preferable. Dovetail-type inlays should not be used. The number of inlays should not exceed 1 large, 2 medium, or 4 small widely separated inlays per blade. A trailing and a leading edge inlay should not overlap more than 25 percent, as shown in figure 15–6. On blades with normal sections from the midsection to the tip, a cross-grain cut, up to 20 percent of the chord in length and one-eighth of the section thickness at the deepest point of damage may be repaired. On blades with thin sections, this depth should not exceed one-twentieth of the section thickness.

(iv) Inlays in the sides of the hubs of fixed-pitch propellers should not exceed in depth a value greater than 5 percent of the difference between the hub and bore diameters. In the portion of the blade where it fairs into the hub, allowable depths for inlays are dependent upon the general proportions. Where the width and thickness are both very large in proportion to the hub and blade, maximum inlay depths of 7½ percent of the section thickness at the center of the inlay are permissible. Where the width and thickness are excessively

small, maximum inlay depths of 2½ percent of the section thickness at the center of the inlay are permissible; for propellers over 50 horsepower, cuts 2½ percent deep may be filled with glue and sawdust, while for propellers under 50 horsepower, cuts 5 percent deep may be filled with glue and sawdust.

(v) Narrow slivers up to one-eighth inch wide broken from the trailing edge at the wider portions of the blade may be repaired by sandpapering a new trailing edge, removing the least material possible, and fairing in a new trailing edge of smooth contour. Both blades should be narrowed by the same amount. Near the hub or tip an inlay should be used and should not exceed, at its greatest depth, 5 percent of the chord.

(vi) In order to replace the wood worn away at the end of the metal tipping, enough of the metal should be removed to make the minimum repair taper 10:1 each way from the deepest point. Due to the convex leading edge of the average propeller, this taper usually works out 8:1. Repairs under the metal tipping should not exceed 7½ percent of the chord for butt or scarf joints, and 10 percent for fishmouth joints, with three-fourths inch maximum depth for any repair.

(vii) The scarfing of wood tips onto a propeller blade to replace a damaged tip is not considered an acceptable repair. The success of this type of repair is fully dependent upon the strength and quality of the glue joint. Since it is difficult to apply pressure evenly over the glue area, and since no satisfactory means are available for testing the strength of such joints, it is quite possible for defective glue joints to occur and remain undetected until failure occurs.

(viii) Whenever the glue joint of an outside lamination of fixed-pitch propellers is open, the propeller may be repaired by removing the loose lamination and gluing on a new lamination of kiln dried wood of the same kind as the original lamination. It is not usually economical to attempt to repair separations between other laminations. Outside laminations, which have been crushed at the hub due to excessive drawing up of hub bolts, may be repaired by planing and sanding one hub face smooth, removing a lamination on the other hub face and replacing it with a new lamination, thus building the hub thickness up to the original thickness. It is permissible to replace both outer laminations if necessary and feasible.

(ix) It is permissible to repair elongated bolt holes by the insertion of a steel bushing around each bolt, as illustrated in figure 15–7 method (C). The bushing should be machined with an inside diameter to fit the bolt snugly and an outside diameter approximately one-fourth inch larger than the bolt size. The bushing should be approximately one-half inch long. The face of the hub should be drilled with a hole concentric with the bolt hole and only to a sufficient depth to accommodate the bushing so that it does not protrude above the surface of the wood hub. The bushing should not be driven into the hub but should fit the hole in the hub with a clearance not exceeding .005 inch after moisture-proofing. The bushing hole should be protected from moisture by two coats of aluminum paint, varnish, glue, or other moisture-resistant coating.

(x) Small cracks, dents, scratches, and cuts in the plastic of plastic covered wood propellers and blades may be repaired by using special repair cement supplied by the manufacturer. Instructions accompany the cements. Polishes and cleaners are available for preserving the gloss finish of varnished or plastic covered propellers and blades.

(xi) Because of the nature of the material, all repairs to composition blades will be of a major nature, and damaged blades should be returned to the manufacturer for repair. However, where repairs to the metal cap and leading edge strip only are necessary, the methods and procedures discussed in the following sections may be followed.

(xii) Fabric used to strengthen the tips of wood blades should be replaced when it becomes loose or worn through. Launder the fabric (mercerized cotton airplane cloth) to remove all sizing. Cut a piece of fabric to approximate size required to cover both faces of outer portion of blade. The fabric should cover the same portion that the original fabric covered. Apply glue to the wood where the fabric is to be put on. Use a rather thick solution of

the glue. Use resorcinol glue when the temperature of the workroom can be kept above 21° C. (70° F.). Put the fabric on glued surface, starting at the leading edge of the thrust face, and work toward the trailing edge. Fold the fabric around the trailing edge over the camber face, and toward the leading edge. Make a joint on the leading edge where it will be covered by the metal tipping. As the fabric is put on, smooth it out over the wood so as to prevent air bubbles or uneven glue underneath. Fabric must be perfectly flat on the blade. Trim excess fabric off with small scissors. Under no circumstances shall fabric be cut or scored with a knife. Allow the glue under the fabric to dry about 6 hours, then brush 2 coats of nitrate dope on the fabric, allowing one-half hour for drying time, and then sand the fabric lightly and brush a coat of pigmented dope over it. Lightly sand the uncovered portion of the wood and apply 2 coats of a good grade of moisture-resistant varnish, allowing 12 to 16 hours drying time between coats.

(xiii) Tipping should be replaced when it cannot be properly repaired. Cracks in the narrow necks of metal between pairs of lobes of the tipping are to be expected and are not defects. All other cracks are defects that should be repaired, or eliminated by new tipping. If the propeller does not require fabric, apply two coats of varnish to the wood to be covered by the metal tipping. If new fabric has been applied, puncture it with a pointed tool at each screw and rivet hole. Apply varnish, white lead, aluminum paint, etc., to all holes, allowing the wood to absorb as much as it can. With a soft lead pencil, draw guide centerlines on the propeller extending about 4 inches from the centers of old screw and rivet holes. This procedure is followed to insure use of the original screw and rivet holes in the propeller. New holes should not be drilled. A number of wood propeller tip failures have occurred which have been attributed to the practice of drilling new rivet and/or screw holes in the woods tips when replacing the metal tipping. To avoid continued occurrence of these failures, it is strongly recommended that the manufacturer's procedure be closely adhered to, and any procedure which involves drilling of new holes in the wood tip and plugging of old holes with dowels should be discontinued immediately.

(xiv) Obtain new tips and leading-edge strips, cut to size and formed to the approximate shape of the leading edge of the propeller. These pieces are usually supplied without holes so that the holes can be drilled in them to line up with the old screw and rivet holes in the propeller as below. If such material cut to shape is not available, the old tipping can be hammered out flat and used as a pattern to lay off a new tip. For this purpose use a piece of sheet metal of the same material and thickness as the old tip. Remove the burr from the cut edges of this piece.

(xv) Lay the cutout flat metal strip over the leading edge. Proceed to bend this metal down over the leading edge of the propeller, being careful that the metal extends an equal width on thrust and camber faces. This can be done by following the impressions of the old tipping lines. Numerous waves will occur in the metal, but these will be eliminated as the work progresses. Obtain several pieces of strong rubber tape, 4 feet long, one-half inch wide, and one-sixteenth inch thick. While forming the metal, hold it in place on the propeller by wrapping the rubber tape around the blade. Start at the tip and work inboard, being careful not to cover the pencil lines placed on the propeller, which show the location of the rivet holes. While the metal is held in place, tap the leading edge with a rawhide or rubber mallet, using moderate force to make sure the metal is seated against the wood along the nose of the leading edge. Smooth the metal by hammering it with the mallet, backing up the opposite side of the blade with a laminated hardwood bucking block having an iron weight built in the center and a piece of leather fastened to the end on which the propeller bears. The block should measure about 2 by 4 inches. Start at the end of the blade and work toward the hub, moving the bucking block so that it is always immediately under the section being hammered. Continue to do this until the metal is well shaped to the profile of the propeller. Check to see that the metal has not moved from

its original position. If this has happened, remove the rubber tape, reset the metal, and rewrap the rubber tape, thus forming the metal to the leading edge.

(xvi) With a centerpunch and a hammer, proceed to locate the old screw and rivet holes, using the pencil marks on the blade as a guide. Punch the metal approximately one-fourth inch from the edge. After all holes have been located, remove the metal from the propeller. Drill screw and rivet holes in the metal with a one-eighth-inch drill. File off burrs on the inside of the metal. Run the drill through the original rivet holes in the propeller in order to clean them out. Cut or saw slots in the metal at the original positions. (Refer to old tipping metal for locations of the slots.) Place the metal leading edges on the blades they were formed to fit, and hold them in place with rubber tape. With a centerpunch as large as or slightly larger than the diameter of the screw and rivet heads, proceed to punch metal into the original countersunk holes in the wood so that the screw and rivet heads may be entered to the correct depth (not more than one-thirty-second inch below the surface of the metal). Use screws and rivets of the appropriate material. The screws should be one size larger than were originally in the propeller, and the rivets should be the solid flat, countersunk-head type. Insert screws and rivets in their respective holes. Install rivets with their heads on the thrust face of the propeller. After the rivets are tapped in place, cut off the excess length of the rivet, leaving one-eighth inch for heading. End cutters built up with solder to accurately measure this distance are very useful. When an assistant backs up the rivets with a steel bar 18 inches long and pointed to fit the rivet head, hammer the rivets either by hand or with a pneumatic hammer. Drive the screws, either by hand or with an electric screw driver.

(xvii) Cut the metal of the cap-tip on the camber face of the propeller to the shape of the propeller tip. Bevel the edges by hand with a file. Trim off flat side of metal cap so that it extends about three-sixteenths-inch all around the tip of the propeller. Form a hardwood block to the shape of thrust face of the propeller tip. Put metal tipping in place and clamp this block to the underside of the tip with a C-clamp. Turn this three-sixteenths-inch of metal up and over the camber face of the tip. Tighten and complete the lap joint. Mount the propeller blade solidly, with the thrust face up, on a stand supporting the blade at several points along its radius. With a hammer and a flatfaced tool, proceed to smooth the metal, starting at the nose of the leading edge and working toward the edge of the metal, until all wrinkles and high spots are removed. At the edge, use a caulking tool and, in the same manner, press the metal edge tightly against the wood. Turn the propeller over and repeat this operation on the camber face. Make sure that the thin tip is supported at all times when hammering. Apply solder over rivet and screwheads and over the metal seam of the tip of the propeller. Use 50-50 solder in wire form. Use muriatic acid as a flux when soldering brass. Use stainless steel soldering flux when soldering stainless steel tipping. File excess solder off and check the propeller balance while doing so. Polish the metal with a fine emery cloth or an abrasive drum driven by a flexible shaft. Vent the tipping by drilling three holes, No. 60 drill [(.040)], three-sixteenths inch deep in the tip end. Vent holes should be parallel to the longitudinal axis of the blade.

(xviii) After repairing a blade, it is usually necessary to refinish it. Refinishing may be classified as a minor repair. In some cases it may be necessary to completely remove the old finish. The finish, where necessary, should be renewed in accordance with the recommendations of the propeller manufacturer, or with a material which has satisfactory adhesion and high moisture resistant properties. Refinishing of plastic covered blades requires special techniques. Some manufacturers make this information available through service bulletins. Care must be exercised when revarnishing or repainting wood blades that the balance of the entire propeller is not disturbed. Coating one blade heavier than the other will produce unbalance, and cause a noticeable vibration during flight.

(xix) It is always necessary to check the balance of the propeller after any repairs or refinishing. Final balance should be accom-

plished on a rigid knife-edge balancing stand or on a suspension type balancer. Balancing must be done in a room free from air currents. There should be no persistent tendency to rotate from any position on the balance stand, or to tilt on the suspension balancer. Horizontal unbalance may be corrected by the application of finish or solder to the light blade. The light blade may be coated with a high grade of primer allowing for a finishing coat. After allowing each coat to dry 48 hours, the balance should be checked. Then, as may be necessary, either the required amount of finish should be removed by carefully sandpapering or an additional coat applied. The balance should be rechecked and sandpapered or additional finish applied as may be required to effect final balancing. Vertical unbalance in fixed-pitch propellers may be corrected by applying putty to the light side of the wood hub at a point on the circumference approximately 90° from the longitudinal centerline of the blades. The putty should be weighed and a brass plate weighing slightly more than the putty should be cut. The thickness of the plate should be from one-sixteenth- to one-eighth-inch depending on the final area, which must be sufficient for the required number of flathead attaching screws. The plate may be made to fit on the hub face or to fit the shape of the light side of the wood hub, and drilled and countersunk for the required number of screws. The plate should be attached and all of the screws tightened. After the plate is finally attached to the propeller, the screws should be secured to the plate by soldering the screw heads. The balance should be checked. All edges of the plate may be beveled to reduce its weight as necessary. The drilling of holes in the propeller and the insertion of lead or other material to assist in balancing will not be permitted.

(3) *Metal propellers and blades.*—Metal propellers should never be operated with sharp edged dents, cuts, scars, scratches, nicks, or pits anywhere on the surface of a blade unless the manufacturer's instructions specifically permit it. Damaged blades with model numbers which are on the manufacturer's lists of blades that cannot be repaired should be rejected.

(i) Due to the critical effects of surface injuries and their repair on the fatigue life of steel blades, all repairs will be of a major nature. Because of the specialized tooling and equipment necessary to repair them, it is recommended that they be returned to the manufacturer for repair. Where equipment is available, the manufacturer's instructions should be followed.

(ii) For aluminum alloy propellers and blades, treatment of dents, cuts, scars, scratches, nicks, leading edge pitting, etc., may be classified as minor repairs provided their removal or treatment does not materially affect the strength, weight, or performance of the blade. These damages should be removed or otherwise treated as explained below unless contrary to manufacturer's instructions or recommendations. More than one injury is not sufficient cause alone for rejection of a blade. A reasonable number of repairs per blade may be made and not necessarily result in a dangerous condition, unless their location with respect to each other is such as to form a continuous line of repairs that would materially weaken the blade. Suitable sandpaper or fine cut files may be used for removing the necessary amount of metal. In each case, the area involved will be smoothly finished with No. 00 sandpaper or crocus cloth, and each blade from which any appreciable amount of metal has been removed will be properly balanced before it is used. Suspected cracks and all repairs should be etched as discussed in section 18.30–15 (c) (4), (i), and (ii). To avoid removal of an excess amount of metal, local etching should be accomplished at intervals during the process of removing suspected cracks. Upon completion of the repair, the entire blade should be carefully inspected by etching or anodizing. All effects of the etching process should be removed with fine emery paper. Blades identified by the manufacturer as being coldworked (shot-blasted or cold-rolled) may require peening after repairing. All repairing and peening on this type of blade should be accomplished in accordance with the manufacturer's instructions. However, it is not permissible in any case to peen down the edges of any injury wherein the operation will lap metal over the injury.

(iii) Nicks, scars, cuts, etc., occurring on the leading edge of aluminum alloy blades should be smoothly rounded out as shown in figure 15–2 (view B). Blades that have the leading edges pitted from normal wear in service may be reworked by removing sufficient material to eliminate the pitting. In this case, the metal should be removed by starting well back from the edge, as shown in figure 15–3, and working forward over the edge in such a way that the contour will remain substantially the same, avoiding abrupt changes in contour or blunt edges. Trailing edges of blades may be treated in substantially the same manner. On the thrust and camber faces of blades the metal around any dents, cuts, scars, scratches, nicks, longitudinal surface cracks, and pits should be removed to form shallow saucer shaped depressions as shown in figure 15–2 (view C). Care should be exercised to remove the deepest point of the injury and also remove any raised metal around the edges of the injury as shown in figure 15–2 (view A). For repaired blades the permissible reductions in width and thickness from minimum original dimensions allowed by the blade drawing and blade manufacturing specification are shown in figure 15–4 for locations on the blade from the shank to 90 percent of the blade radius. Beyond the 90-percent blade radius point, the blade width and thickness may be modified as required.

(iv) Major repairs to aluminum alloy propellers and blades include shortening due to damaged tips, repairs to deep dents, cuts, scars, nicks, etc., and straightening of bent blades (see section 18.1–3 (c)). The propeller manufacturer's instructions should be followed in all cases. Any repair on leading and trailing edges of the blades which results in a finished depression more than one-fourth-inch deep (chordwise of the blade) and 1 inch long will be a major repair, and should be submitted to a certificated repair station. Any repair on the thrust and camber faces of the blades which results in a finished depression more than one-eighth inch in depth at its deepest point, three-eighths inch in width overall, and one inch in length overall, will be a major repair, and should be submitted to a certificated repair station. When the removal or treatment of defects on the tip necessitates shortening a blade, each blade used with it should be likewise shortened. Such sets of blades should be kept together (see fig. 15–5 for acceptable methods). The shortened blades should be marked to correspond with the manufacturer's system of model designation to indicate propeller diameter. If, in making the repair, it is necessary to reduce the propeller diameter below the minimum diameter limit shown on the pertinent airplane specification, the repair should be submitted to a representative of the Civil Aeronautics Administration for approval. In such cases it may be necessary to investigate the performance characteristics of the airplane with the reduced diameter propeller installed. Bent blades may be repaired only by the manufacturer or certificated repair agencies holding the appropriate ratings. The extent of a bend in face alinement should be carefully checked by means of a protractor similar to the one illustrated in fig. 15–1. Only bends not exceeding 20° at 0.15-inch blade thickness to 0 degrees at 1.1-inch blade thickness may be cold-straightened. [Blades with bends exceeding these values should be straightened only upon recommendation of the manufacturer, and only at facilities having proper heat-treating equipment. In all cases, the blades should be inspected as discussed in section 18.30–15 (c) (4) (i) and (ii) for cracks and other injuries both before and after straightening.]

(v) The following tolerances are those listed in the blade manufacturing specification for aluminum alloy blades and govern the width and thickness of new blades. These tolerances are to be used with the pertinent blade drawing to determine the minimum original blade dimensions to which the reductions of fig. 15–4 may be applied. When repairs reduce the width or thickness of the blade below these limits, the blade should be rejected. The face alinement, or track, of the propeller should fall within the limits recommended by the manufacturer for new propellers.

		Manufacturing tolerance (inch)
Basic diameter less than 10 feet 6 inches:		
Blade width	from shank to:	
	24-inch station	±3/64
	to tip	±1/32
Blade thickness		±0.025
Basic diameter 10 feet 6 inches to less than 14 feet 0 inches:		
Blade width	from shank to 24-inch station	±1/16
	from 30-inch station to tip	±1/32
Blade thickness	from shank to 24-inch station	±0.030
	from 30-inch station to tip	±0.025
Basic diameter 14 feet 0 inches and over:		
Blade width	from shank to 30-inch station	±3/32
	from 36-inch station to tip	±1/16
Blade thickness	from shank to 30-inch station	±0.040
	from 36-inch station to tip	±0.035

(vi) No repairs are permitted to the shanks (roots, or hub ends) of aluminum alloy adjustable pitch blades. The shanks must be within drawing tolerances.

(vii) Upon completion of repairs, horizontal and vertical balance should be checked and any unbalance should be corrected as recommended by the manufacturer. A coaxial hole is drilled in the butt end of certain aluminum alloy detachable blades for the application of lead to obtain static horizontal balance. The size of this hole should not be increased by the repair agency.

To effect vertical balance, only the manufacturer is permitted to drill and apply lead to an eccentric hole. The outside of this hole should be no closer than one-fourth inch to the nearest external blade surface. As an alternate to drilling the two holes mentioned above, the manufacturer may have drilled a single eccentric hole having a diameter and depth conforming to the eccentric hole dimensions, given in the table below, for the application of lead. The outer edge of this hole should not be closer than 1 inch to the nearest external blade surface. The ends of all balancing holes should be finished with a full sized drill having a spherical end to eliminate sharp corners. The sharp edges of all holes should be removed by a one-thirty-second-inch chamfer. The following table is included for inspectional information only as no drilling is to be done by anyone other than the manufacturer:

SIZE AND DEPTH OF BALANCING HOLES

Shank size	Maximum concentric hole diameter	Maximum concentric hole depth	Maximum eccentric hole depth (¾ inch maximum diameter)
	Inch	*Inches*	*Inches*
00	7/16	2½	2¼
0–V2	13/32	3⅜	3
½	5/8	3⅝	3½
1	¾	4¼	4
1½	13/16	4⅞	4½
2	⅞	5½	5
3	31/32	6⅛	6

(4) *Steel hubs and hub parts.*—Repairs to steel hubs and parts are of a major nature, and should be accomplished only on the manufacturer's recommendations. Welding of hubs, hub parts, or control parts is not permissible. Remachining is permissible only when covered by manufacturer's service bulletins.

(i) When the propeller bolt holes in a hub or crankshaft flange for fixed pitch propellers become damaged or oversize, it is permissible to make repairs by method (A) or (B) in figure 15–7, or by use of aircraft standard bolts one-sixteenth inch larger than the original bolts. The repairs should be made in accordance with the recommendations of the propeller metal hub manufacturer who is usually the engine manufacturer. Obtain from the engine or propeller hub manufacturer, suitable flange bushings with threaded or smooth bores, as illustrated in method (A) or (B) of figure 15–7. Drill the flange and insert the bushings as recommended by the engine manufacturer. Drill the rear face of the propeller to accommodate the bushings, and protect the holes with

two coats of aluminum paint or other high moisture-resistant coating. Use bolts of the same size as those originally used. Any of the following combinations may be used: Safety bolt and castellated nut, safety bolt (drilled head) and threaded bushing, or undrilled bolt and self-locking nut. Where it is desirable to use oversize bolts, obtain suitable aircraft standard bolts one-sixteenth inch larger than the original bolts. Enlarge the crankshaft propeller flange holes and the propeller hub holes sufficiently to accommodate the new bolts without more than 0.005 inch clearance. Such reboring will be permitted only once. Further repairs of bolt holes may be made in accordance with method (A) or (B) of figure 15–7. (NOTE: Method (A) or (B) is preferred over the over-size bolt method, because a propeller hub flange redrilled in accordance with this latter method will always require the redrilling of all new propellers subsequently used with the redrilled flange.)

(5) *Control systems.*—Components used to control the operation of certificated propellers should be inspected, repaired, assembled and tested in accordance with the manufacturer's recommended practice. It is recommended that all necessary replacement parts be those made under the control of the propeller manufacturer. It is recommended that only those repairs which are covered by manufacturer's recommendations be made.

(6) *De-icing systems.*—Components used in propeller de-icing systems should be inspected, repaired, assembled, and tested in accordance with the manufacturer's recommended practice. It is recommended that all necessary replacement parts be those made under the control of the propeller manufacturer. It is recommended that only those repairs which are covered by manufacturer's recommendations be made.

(c) *Overhaul of propellers.*

(1) *General.*—Periodic overhaul of controllable pitch propellers is classified as a major repair in section 18.1–3, and includes the following operations:

Assembly and disassembly (except to the extent the operation is considered as a minor repair under section 18.1–5 (c) (4)).

Replacement of worn parts.

Magnetic particle inspection, fluorescent penetrant inspection, anodizing, acid etching.

De-plating, and re-plating.

(2) *Hub and hub parts.*—Propellers submitted for overhaul should be disassembled, and all hub parts should be cleaned in accordance with the manufacturer's recommendations. An inspection of the parts should be made to determine that the critical dimensions are within the manufacturer's specified tolerances. Particular care should be taken to check the 90° relation between shaft bore and blade socket centerline and track of the blade sockets, as these are the dimensions which are most likely to be affected by accidents. Any hub which is sprung should be rejected. Worn or damaged parts should be replaced. Stress raisers such as cuts, nicks, or tool marks should be carefully stoned out or the part rejected. Splines and cone seats should be carefully inspected for signs of wear. Splines should be checked with a single key "no-go" gage made to plus 0.002 inch of the base drawing dimensions for spline land width. If the gage enters more than 20 percent of the spline area, the hub should be rejected. Cones and cone seats may show discoloration, pitting, and corrosion. Generally, corrosion and discolored spots may be removed by light lapping. Pitting is not grounds for rejection if 75 percent of the bearing area is not affected and the pitted areas are well dispersed about the cone bearing area. After cleaning, steel hubs and parts should be minutely inspected for cracks by the wet or dry magnetic particle method at every major overhaul period. It is not necessary to remove the plating or special external finish for this inspection unless so specified in the manufacturer's recommended practice. A brief statement recording the inspection and its findings should be included in the aircraft record entry. A similar entry should be made in the repair records of the repair base. In the case of an air carrier, this is considered the equivalent of the record entry. Any crack is cause for rejection.

Steel hubs which adapt fixed-pitch propellers to 0 taper crankshafts are susceptible to cracks along the keyway which often extend into the flange lightening holes. These hubs should be carefully inspected by the magnetic

particle method at engine overhaul periods. Any crack is cause for rejection.

(3) *Plating for hubs and parts.*—Plated hubs and parts from which the plating has been removed should be replated after they have been satisfactorily inspected. All replating must be of the same material as the original plating, and should be done in accordance with the manufacturer's recommendations. Chrome or nickel plating is not an acceptable substitute for cadmium or zinc plating. The use of zinc chromate primer on the external surfaces followed by a coating of aluminum lacquer in lieu of cadmium plating is considered acceptable where recommended by the manufacturer. However, this type of finish will require replacement more frequently than cadmium plating.

[(4) *Aluminum propellers and blades.*—Aluminum propellers and blades should be carefully inspected for cracks and other injuries. A transverse (chordwise) crack or flaw of any size is cause for rejection. An excessive number of longitudinal flaws is cause for rejection. Any unusual condition or appearance revealed by these inspections should be referred to the manufacturer. Acceptable inspection methods are the acid etching process, the anodizing process, the fluorescent penetrant process (see section 18.30–8 (d) (5)), or the dye penetrant process (see section 18.30–8 (d) (6)) where applicable, supplementing one process with another where necessary. Etching is accomplished by immersing as much of the blade as possible in a warm 20 percent caustic soda solution and cleaning with a warm 20 percent nitric acid solution, with a warm water rinse between the caustic bath and the acid bath, and also a warm water rinse following the acid bath. All effects of the etching should be removed by polishing. The caustic and acid solutions should be maintained at a temperature of from 160° F. to 180° F. Some blades incorporate parts made of steel and other materials, and the caustic soda and the nitric acid must not be allowed to come in contact with these parts. The blade surfaces are then examined with a magnifying glass of at least three-power. A crack will appear as a distinct black line. The fluorescent penetrant method is recommended as a supplement to the caustic etch for the inspection of the shanks (roots or hub ends) of adjustable pitch blades.]

(i) Suspected cracks or defects should be repeatedly locally etched until their nature is determined. With a No. 00 sandpaper, or fine crocus cloth, clean and smooth off the area containing the apparent crack. Apply a small quantity of caustic solution to the suspected area with a swab or brush. After the area is well darkened, thoroughly wipe it off with a clean (dampened) cloth. Too much water may entirely remove the solution from a crack and spoil the test. If a crack extending into the metal exists, it will appear as a dark line or mark, and by using a magnifying glass, small bubbles may be seen forming in the line or mark. Immediately upon completion of the final checks, all traces of the caustic solution will be removed by the nitric acid solution. Wash the blade thoroughly with clean (fresh) water.

(ii) The chromic acid anodizing process is superior to caustic etching for the detection of cracks and flaws and should therefore be used, whenever it is available, for general inspection of blades for material defects and for final checking of repairs performed during overhaul. The blades should be immersed in the anodizing bath as far as possible, but all parts not made of aluminum alloy must either be kept out of the chromic acid bath or be separated from the blade by nonconductive wedges or hooks. The anodizing treatment should be followed by a rinse in clear, cold, running water for 3 to 5 minutes, and the blades should then be dried as quickly as possible, preferably with an air blast. The dried blades should stand for at least 15 minutes before examination. Flaws (cold shuts or inclusions) will appear as fine black lines. Cracks will appear as brown stains caused by chromic acid bleeding out onto the surface. The blades may be sealed for improved corrosion resistance by immersing them in hot water (180° F. to 212° F.) for one-half hour. In no case should the blades be treated with hot water before the examination for cracks, since heating expands any cracks and allows the chromic acid to be washed away.

(5) *Assembly.*—Assembly of the propeller hub and blades should be accomplished in ac-

cordance with the manufacturer's recommendations. Clevis pins, bolts, and nuts which show wear or distortion should be replaced. Cotter pins and safety wire should never be used a second time. The use of self locking nuts is permissible only where originally used or approved by the manufacturer.

(d) *Assembly of propeller to engine.*

(1) *Fixed-pitch propellers.*—Loose hub bolts and bolts installed through the lightening holes in the integral hub flange of certain engine crankshafts cause the majority of the serious difficulties experienced with fixed-pitch propellers. Either of the conditions, if uncorrected, will ultimately cause the loss of the propeller.

(i) Loose hub bolts cause elongated bolt holes and damage to the hub bolts. When not corrected, the bolts break off or friction causes enough heat to affect the glue and char the wood. After successive running, checks start at the bolt holes. These checks are caused, or at least accentuated, by shrinkage of the wood due to the excessive heat generated. If allowed to progress, the propeller usually flies apart or catches fire.

(ii) On some engines equipped with a crankshaft having an integral propeller hub flange, the outer edge of the lightening holes is at the same radius as the corresponding edge of the propeller hub bolt holes. When inserting the bolts through the propeller, care must be exercised so that the bolts are inserted through the proper holes in the flange. Cases have been reported where the bolts were inserted through the larger lightening holes and, accordingly, the bolt nuts bore only on the outer edges of the lightening holes. In such cases, continued running of the propeller may cause the bolt heads or nuts to slip off the flange and through the large openings in the flange, resulting in the subsequent loss of the propeller.

(iii) Both of the conditions discussed above are very easy to detect, and should be corrected immediately by a certificated mechanic or certificated repair station. In case the hub flange is integral with the crankshaft, first ascertain that the bolts are properly installed. Then make the inspection for bolt tightness in the same manner as for any other propeller hub. Use an open end wrench to determine hub bolt tightness and if the nuts can be turned, remove the cotter keys and draw up the nuts to the desired setting. Hub bolts should be tightened, preferably with a torque wrench, to the recommended values which usually range from 15 to 24 foot-pounds. If no torque wrench is available, an ordinary socket wrench may be used. This socket wrench should have a 1-foot extension lever and the wrench pulled up with the recommended force, 12 inches away from the center of the bolt which is being tightened. The tightening is best accomplished by tightening each bolt a little at a time, being sure to tighten alternate bolts which are diametrically opposite. Care should be taken not to overtighten the hub bolts, thereby damaging the wood underneath the hub flanges. The practice of overtightening bolts to draw a propeller into track should definitely be avoided. Safetying of the nuts should be accomplished by means of cotter keys of the proper size, or heavy safety wire twisted between each nut. A continuous length of single safety wire should never be used as wire failure will result in all nuts becoming unsafetied.

(e) *Alterations to propellers.*

(1) *General.*—All alterations to propellers should be made in accordance with the manufacturer's recommendations.

(2) *Alterations to wood detachable blades and fixed-pitch propellers.*—It has been found that the service life of wood blades and propellers covered with plastic greatly exceeds the service life of those finished with varnish. It is permissible to strip the varnish from any propeller or blade and apply the plastic covering even though the propeller or blade, when new, had not been approved for this process. The nature of the process classifies it as a major alteration. Only those manufacturers and certificated repair stations who have received specific approval for the plastic covering process are eligible to reprocess in the same manner any propeller or blade. Any propeller or blade thus altered should carry some means of identification to indicate the change. It is permissible for a manufacturer to obtain approval for, and to assign new model numbers to propellers and blades of his own design and manufacture thus reprocessed. It is recommended that certificated repair stations and manufacturers reprocessing propellers and blades not of their

own design and manufacture, apply some symbol to the model or serial number. This symbol or means of identification must be approved by the Administrator. It has also been found in some cases advantageous to replace the tipping fabric with a thin plastic covering. This is also classified as a major alteration, and must be performed by only those manufacturers and certificated repair stations who have received specific approval for the process.

(f) *Precautions.*

(1) *General.*—Many persons have been fatally injured by walking into whirling propellers. Painting a warning stripe on the propeller serves to reduce chances of such injuries. Approximately 4 inches of the propeller tips should be covered on both sides with an orange-yellow nonreflecting paint or lacquer. The drain holes in the metal tipping of wood blades should be opened up after the tips have been painted.

(2) *Wood propellers.*—Wood propellers are especially susceptible to damage from improper handling. When moving an airplane, special care should be exercised to avoid bumping the propeller. The practice of pushing or pulling on a propeller blade to move an airplane should be avoided; it is extremely easy to impose forces on a blade in excess of those for which the blade is designed. It is continually necessary to ascertain that the glue joints are in good condition and that the finish on the entire propeller will protect the propeller from absorbing moisture. Two-bladed wood propellers should always be left or stored, whether on or off of an airplane, in a horizontal position to prevent unbalance from moisture absorption. A good precaution is to cover the propeller with a well fitting waterproof cover when not in use. It is very important to protect the shank section of wood blades from moisture changes to prevent swelling and subsequent loosening in the metal sleeve. In the case of varnished blades, it is advisable to occasionally apply varnish around the shank at the junction of wood and metal. In the case of the plastic covered blade, repair cement may be applied around the same joint.

(3) *Composition propellers.*—In certain cases where the blade has been manufactured from laminated planks of composition material, longitudinal cracks or splitting between laminations have been observed after several hundred hours of operation. These cracks dare not progress beyond definite limits as covered by the manufacturer's service bulletin.

(18 F. R. 7423, Nov. 21, 1953, effective Nov. 30, 1953; amended 19 F. R. 4185, July 9, 1954, effective July 15, 1954; amended 22 F. R. 601, Jan. 30, 1957, effective Feb. 20, 1957.)

18.30–16 *Weight and balance control.*—(*CAA policies which apply to section 18.30*).

(a) *General.*—The purpose of the following is to explain various items concerned with aircraft weight and balance. It covers computation of actual weight and balance, and its relation to aircraft operation within its approved limitations.

The removal or addition of equipment results in changes to the center of gravity and empty weight of the aircraft, and the permissible useful load is affected accordingly. Obviously the effects of these changes should be investigated in all cases otherwise the flight characteristics of the airplane may be adversely affected.

Information on which to base the record of weight and balance changes to the aircraft may be obtained from the pertinent aircraft specification, the prescribed aircraft operating limitations, and the latest approved Form ACA–337.

[Removal or addition of minor items of equipment such as nuts, bolts, rivets, washers, and similar standard parts of negligible weight on fixed wing aircraft do not require a weight and balance check. Since rotor wing aircraft are in general more critical with respect to control with changes in c. g. positions, the procedures and instructions in the particular model maintenance or flight manual should be followed.]

(1) *Terminology.*—The following terminology is used in the practical application of weight and balance control.

(i) *Maximum weight.*—The maximum weight is the maximum authorized weight of the aircraft and its contents as listed in the specifications.

(ii) *Empty weight.*—The empty weight of an aircraft includes all operating equipment that has a fixed location and is actuallyinstalled in the aircraft. It includes the weight of the airframe, powerplant, required equipment, optional and special equipment, fixed ballast, full

engine coolant, hydraulic fluid, and the fuel and oil as explained in section 18.30–16 (b) (6) and (7). Additional information regarding fluids which may be contained in the aircraft systems and which must be included in the empty weight will be indicated in the pertinent aircraft specifications whenever deemed necessary.

(iii) *Useful load.*—The useful load is the empty weight subtracted from the maximum weight of the aircraft. This load consists of the pilot, crew if applicable, maximum oil, fuel, passengers, and baggage unless otherwise noted.

(iv) *Weight check.*—A weight check consists of checking the sum of the weights of all items of useful load against the authorized useful load (maximum weight less empty weight) of the aircraft.

(v) *Datum.*—The datum is an imaginary vertical plane or line from which all horizontal measurements are taken for balance purposes with the aircraft in level flight attitude. The datum is indicated on most aircraft specifications. On some of the older aircraft where the datum is not indicated, any convenient datum may be selected. However, once the datum is located all moment arms and the location of the permissible c. g. range must be taken with reference to it. Examples of typical locations of the datum are shown in figure 16–1.

(vi) *Arm (or moment arm).*—The arm is the horizontal distance in inches from the datum to the center of gravity of an item. The algebraic sign is plus (+) if measured aft of the datum and minus (−) if measured forward of the datum. Examples of plus and minus arms are shown in figure 16–2.

(vii) *Moment.*—Moment is the product of a weight multiplied by its arm. The moment of an item about the datum is obtained by multiplying the weight of the item by its horizontal distance from the datum. A typical moment calculation is given in figure 16–3.

(viii) *Center of gravity.*—The center of gravity is a point about which the nose-heavy and tail-heavy moments are exactly equal in magnitude. If the aircraft were suspended therefrom it would have no tendency to pitch in either direction (nose up or down). The weight of the aircraft (or any object) may be assumed to be concentrated at its center of gravity.

(ix) *Empty weight center of gravity.*—The empty weight c. g. is the center of gravity of an aircraft in its empty weight condition, and is an essential part of the weight and balance record. Formulas for determining the center of gravity for tail and nose-wheel type aircraft are given in figure 16–4. Typical examples to determine the empty weight and c. g. for the tail-wheel and nose-wheel type aircraft are determined by computation in figures 16–5 and 16–6.

(x) *Empty weight center of gravity range.*—The empty weight center of gravity range is determined so that when the empty weight c. g. falls within this range the specification operating c. g. limits will not be exceeded under standard specification loading arrangements. In cases where it is possible to load an airplane in a manner not covered in the aircraft specification (i. e. extra tanks, extra seats, etc.), complete calculations should be accomplished, as outlined in section 18.30–16 (c) (5) (i). The empty weight c. g. range, when applicable, is listed on the aircraft specifications.

(xi) *Operating center of gravity range.*—The operating c. g. range is the distance between the forward and rearward center of gravity limits indicated on the pertinent aircraft specification. These limits were determined as the most forward and most rearward loaded c. g. positions at which the aircraft meets the requirements of the Civil Air Regulations. The limits are indicated on the specification in either percent of MAC or inches from the datum. The c. g. of the loaded airplane must be within these limits at all times as illustrated in figure 16–7.

(xii) *Mean aerodynamic chord (MAC).*—The MAC is the mean chord of the wing. For weight and balance purposes it is used to locate the c. g. range of the aircraft. The location and dimensions of the MAC will be found in the Aircraft Specification, Flight Manual, or the Aircraft Weight and Balance Record.

(xiii) *Weighing point.*—If the c. g. location is determined by weighing, it is necessary to obtain horizontal measurements between the points on the scales at which the

airplane's weight is concentrated. If usual weighing practice is followed, a vertical line passing through the centerline of the axle will locate the point on the scale at which the weight is concentrated. This point is called the Weighing Point. Other structural locations, capable of supporting the aircraft, such as jack pads on the main spar, may also be used. These points should be clearly indicated in the weight and balance record when used in lieu of the usual points. Typical locations of the weighing points are shown in figure 16–8.

(xiv) *Minimum fuel.*—Minimum fuel for balance purposes is one-twelfth gallon per maximum-except-takeoff horsepower (METO), and is the maximum amount of fuel which should be used in weight and balance computations when low fuel might adversely affect the most critical balance conditions. To determine the weight of fuel in pounds divide the METO horsepower by 2.

(xv) *Full oil.*—Full oil is the quantity of oil shown in the aircraft specifications as oil capacity. Full oil should always be used as the quantity of oil when making the loaded weight and balance computations.

(xvi) *Tare.*—Tare is the weight of chocks, blocks, stands, etc., used when weighing aircraft, and is included in the scale readings. Tare is deducted from the scale reading to obtain the actual aircraft weight.

(b) *Weighing procedure.*—The following procedure should be followed when weighing an aircraft:

(1) The aircraft should be weighed inside a closed building to prevent error in scale reading due to wind.

(2) Excessive dirt, grease, moisture, etc., should be removed from the aircraft before weighing.

(3) If the center of gravity is to be determined, the aircraft should be placed in a level flight attitude.

(4) All items of equipment to be installed in the aircraft and included in the certificated empty weight should be in place for weighing. These items of equipment should be a part of the current weight and balance record. (See sections 18.30–16 (c) (5) and 18.30–16 (c) (5) (i).)

(5) Scales should be properly calibrated, zeroed, and used in accordance with the scale manufacturer's instructions. The scales, and suitable supports for the aircraft if necessary, are usually placed under the wheels of a land plane, the keel of a seaplane float, or the skis of a ski plane. Other structural locations capable of supporting the aircraft such as jack pads on the main spar also may be used. These points should be clearly indicated in the weight and balance data.

(6) Unless otherwise noted in the aircraft specification, the fuel system should be drained until the quantity indicator reads zero or empty with the aircraft in level flight attitude. The amount of fuel remaining in the tank, lines, and engine is termed residual fuel and it should be included in the empty weight. In special cases the aircraft may be weighed with full fuel in the fuel tanks provided a definite means of determining the exact weight of the fuel is available.

(7) Unless otherwise noted in the aircraft specification, the oil system should be completely drained with all drain cocks open. Under these conditions, the amount of oil remaining in the oil tank, lines, and engine is termed, "residual oil" and it should be included in the empty weight. When weighed with full oil, actual empty weight equals the actual recorded weight less the weight of the oil in the oil tank (oil capacity in gallons×7.5 pounds). All reports should indicate whether weights include full oil or oil drained (see fig. 16–9).

(8) Brakes should not be set while taking scale reading.

(9) Tare should be noted when the aircraft is removed from the scales.

(c) *Weight and balance computations.*—It is often necessary, after completing an extensive repair or alteration, to establish by computation that the authorized weight or c. g. limits as shown on the aircraft specifications are not exceeded. The following information explains the significance of algebraic signs used in balance computations, outlines the loading conditions to check, and deals with equipment changes.

The aircraft specifications contain the following information relating to the subject:

C. G. range.

Empty weight c. g. range when applicable.
MAC (Mean Aerodynamic Chord).
Leveling means.
Datum.
Maximum weights.
Number of seats and arm.
Maximum baggage and arm.
Fuel capacity and arm.
Oil capacity and arm.
Equipment items and arm.

(1) *Unit weights for weight and balance purposes.*

Gasoline	6 pounds per U. S. gal.
Lubricating oil	7.5 pounds per U. S. gal.
Crew and passengers	170 pounds per person

(2) *Algebraic signs.*—Care should be exercised to insure retention of the proper algebraic sign (+ or −) throughout all balance computations and to always visualize the aircraft (for the sake of uniformity in these computations) with the nose to the left. In this position any arm to the left (forward) of the datum is minus and any arm to the right (rearward) of the datum is plus. Any item of weight added to the aircraft either side of the datum is a plus weight. Any weight item removed is a minus weight. When multiplying weights by arms, the answer is plus if the signs are alike and minus if the signs are unlike.

The following combinations are possible:

Items added forward of the datum—(+) weight × (−) arm = (−) moment.

Items added to the rear of the datum—(+) weight × (+) arm = (+) moment.

Items removed forward of the datum—(−) weight × (−) arm = (+) moment.

Items removed rear of the datum—(−) weight × (+) arm = (−) moment.

The total weight of the airplane is equal to the weight of the empty airplane plus the weight of the items added, minus the weight of the items removed.

The total moment is equal to the moment of the empty airplane combined with the individual moments of the items added or removed. In combining moments, plus moments are added and minus moments are subtracted.

(3) *Weight and balance extreme conditions.*—The weight and balance extreme conditions represent the maximum forward and rearward c. g. positions for the aircraft. Information showing that the c. g. of the aircraft (usually in the fully loaded condition) falls between the extreme conditions should be included in the weight and balance data. The extreme conditions may be determined either by weighing or computation.

(i) *Forward weight and balance check.*—When a forward weight and balance check is made, it should be established that neither the maximum weight nor the forward c. g. limit listed in the aircraft specifications are exceeded. In making this check, the following information should be obtained:

(*a*) The weight, arm, and moment of the aircraft empty.

(*b*) The maximum weights, arms, and moments of the items of useful load which are located ahead of the forward c. g. limit.

(*c*) The minimum weights, arms, and moments of the items of useful load which are located aft of the forward c. g. limit.

A typical example of the computations necessary to make this check using the above data is shown in figure 16–10.

(ii) *Rearward weight and balance check.*—When a rearward weight and balance check is made, it should be established that neither the maximum weight nor the rearward c. g. limit listed in the aircraft specification are exceeded. In making this check, the following information should be obtained:

(*a*) The weight, arm, and moment of the aircraft empty.

(*b*) The maximum weights, arms, and moments of the items of useful load which are located aft of the rearward c. g. limit.

(*c*) The minimum weights, arms, and moments of the items of useful load which are located ahead of the rearward c. g. limit.

A typical example of the computation necessary to make this check using the above data is shown in figure 16–11.

(4) *Loading conditions and/or placards.*—If the following items have not been covered

in the weight and balance extreme condition checks, or are not covered by suitable placards in the aircraft, additional computations should be made. These computations should indicate the permissible distribution of fuel, passengers, and baggage which may be carried in the aircraft at any one time without exceeding either the maximum weight or the c. g. range. The conditions to check are:

(i) With full fuel, determine the number of passengers and baggage permissible.

(ii) With maximum passengers, determine the fuel and baggage permissible.

Examples of the computations for the above items are given in figures 16–12, 16–13, and 16–14, respectively. The above cases are mainly applicable to the lighter-type personal aircraft. In the case of the larger-type transport aircraft, a variety of loading conditions is possible and it is usually necessary to have changes in the loading schedule approved separately by the CAA.

(5) *Equipment list.*—A list of the equipment included in the certificated empty weight may be found in either the approved airplane operating manual or the weight and balance data. All required, optional, and special equipment installed in the aircraft at time of weighing and/or subsequent equipment changes should be entered in the aircraft operating limitations.

Required equipment items are items so listed in the pertinent aircraft specification.

Optional equipment items are so listed in the pertinent aircraft specification and may be installed in the aircraft at the option of the owner.

Special equipment is any item not corresponding exactly to the descriptive information in the aircraft specification. This includes such items as flares, instruments, ash trays, radios, navigation lights, carpets, etc.

Required and optional equipment may be shown on the equipment list by making reference to the pertinent item number listed in the applicable specification only when they are identical to that number item with reference to description, weight, and arm given in the specification. All special equipment items should be shown by making reference to the item by name, make, model, weight, and arm. When the arm for such an item is not available, it should be obtained by actual measurement.

(i) *Equipment changes.*—The owner should see that a continuous record for each aircraft is kept, listing all changes affecting the weight, c. g. location, and equipment changes in order that a computed weight and c. g. location may be established at any time. An entry should be made on the equipment list indicating the items added, removed, or relocated, and the date accomplished. The identification of the repair agency should be included. Examples of items so affected are the installation of extra fuel tanks, seats, or baggage compartments. Figure 16–15 illustrates the effect on balance when equipment items are added within the acceptable c. g. limits and fore and aft of the established c. g. limits. Moment computations for typical equipment changes are given in figure 16–16 and are also included in the sample weight and balance sheet in figure 16–18.

(6) *Sample weight and balance reports.*—Suggested methods of tabulating the various data and computations for determining the c. g., both in the empty weight condition and the fully loaded condition, are given in figures 16–17 and 16–18, respectively. The data presented in figure 16–17 have previously been computed in figure 16–5 and represent a suggested means of recording this information. The data presented in figure 16–18 have previously been computed in figures 16–10 and 16–11 for the extreme loading conditions, and figure 16–16 for equipment change, and represent a suggested means of recording this information.

(d) *Installation of ballast.*—Ballast is sometimes permanently installed for c. g. balance purposes resulting from the installation or removal of equipment items and should not be used to correct a nose-up or nose-down tendency of an aircraft. It is usually located as far aft or as far forward as possible in order to bring the c. g. position within acceptable limits with a minimum of weight increase. Permanent ballast is often in the form of lead plate wrapped around and/or bolted to the fuselage primary structure (tail-post, longe-

rons, or bulkhead members). Permanent ballast invariably constitutes a concentrated load; accordingly, the strength of the local structure and the attachment of the ballast thereto should be investigated for the design loading conditions pertinent to the particular aircraft. Permanent ballast should be placarded: "Permanent ballast, do not remove." It is not desirable to install permanent ballast by pouring melted lead into the tail-post or longerons, due to difficulties that may be encountered in subsequent welding repair operations. It should be noted that the installation of permanent ballast results in an increase of aircraft empty weight.

When disposable ballast is carried, the local strength of the compartment in which the ballast is carried, and the effect of the ballast on the aircraft balance and weight should be investigated.

(e) *Loading schedule.*—The loading schedule should be kept with the aircraft and usually forms a part of the airplane flight manual. It includes instructions on the proper load distribution, such as filling of fuel and oil tanks, passenger seating, restrictions of passenger movement, distribution of cargo, etc.

Other means of determining safe loading conditions, such as the use of a graphical index, load adjuster, etc., are acceptable and may be used in lieu of the information in section 18.30–16 (c) (4).

A separate loading condition should be computed when the aircraft is to be loaded in other than the specified conditions shown in the loading schedule.

18 F. R. 7429, Nov. 21, 1953, effective Nov. 30, 1953.)

18.30–17 *Procedures and guiding comments covering typical major alterations and modifications.—(CAA policies which apply to section 18.30).*

(a) *The installation of an engine of a type other than that covered by a type certificate or otherwise approved by the Administrator.*—It is generally understood that the purpose of most changes involving the installation of an engine of a type other than that covered by the original approval is to permit full advantage to be taken of improvements in engine performance which do not involve a material increase in engine weight. This is of direct benefit to the operator of the airplane, as it increases safety of operation and/or performance by improving takeoff, climb, single-engine performance, true cruising speeds at altitude, engine reliability, and engine life between overhauls, with few (if any) changes in the aircraft structure. It should be carefully noted that these benefits will be difficult to obtain if the changes made require or involve an increase in the originally approved airplane gross weight or placard speeds. If the changes result in an increase in placard speeds, it will be necessary in any event to reinvestigate the structure for compliance with flutter prevention measures. Before making a change in engine it is always advisable for an owner to contact the manufacturer of the make of airplane involved to learn if the proposed change has ever been approved by the Administrator. If there is a record of approval, it is often a relatively simple matter to revise the airplane to conform with the manufacturer's approved data.

The general procedure to be followed, when the rated power of the engine to be installed exceeds that originally used for design purposes or exceeds the rated power of the engine being replaced, is described in the following paragraphs. It consists, briefly, in substantiating the strength of the engine mount and adjacent structure for the takeoff (1 minute) power and for the local increase in weight, if any, and in limiting the engine output and indicated speeds for subsequent posting in the aircraft. The engine placard limits differentiate between the power permitted for continuous operation (maximum, except takeoff), and that which has been approved for takeoff only (takeoff, 1 minute). The following procedure applies to modifications of existing designs but the principles will also apply to new designs under consideration.

To expedite handling and to reduce the usual exchange of correspondence to a minimum, the applicant for approval of the change should always supply a complete description of the proposed engine replacement. When an individual airplane is being modified it should be identified in the correspondence as to name of manufacturer, model designation, manufacturer's serial number and identification mark. In addition, a new or revised airplane model designation should be selected to distinguish

it from the original model. The current status of the engine to be used should be determined prior to the completion of any extensive changes. CAA field inspection personnel are supplied with this information and they will assist in the determination of the status of the engine in question. Copies of the approved engine specification can be obtained from CAA, Printing Services Branch, Washington 25, D. C.

The data submitted should include a comparison of the weights of the original and proposed engine installations. Appendix I of the "Repair and Alteration Manual" will be found useful in rechecking the balance. The aircraft specification includes the approved center of gravity range.

Changes in engine mount structure and the local effects of an increase in engine weight must, of course, be investigated. The extent of such investigation will depend largely upon the amount of increased power the applicant desires to use in takeoff (1 minute) and the remaining operations.

(1) *Airspeed placard limits.*—There are some certificated airplanes in service which do not display the placard speeds specified in the current requirements. These airplane models were approved prior to the application of the 1934 edition of Aeronautics Bulletin No. 7-A in which the requirements for airspeed placards first appeared in the airplane regulations. In these cases when the rated power of the engine being installed exceeds that of the engine installation originally approved, the following airspeed limits should be displayed:

Level flight or climb: V_L

Glide or dive: 1.2 V_L is the actual indicated high speed in level flight obtainable with the power of the engine originally used.

If the applicant for approval wishes to raise these placard limits, there are no objections to his investigation of the case. The current requirements will serve as a guide for determining which components of the airplane and pertinent loading conditions or design criteria involve a consideration of design airspeeds. For cases in which airspeed placard limits were determined as part of the original approval, the use of an engine with rated power in excess of that originally used for design purposes will not require changes of the original airspeed placard limits. However, as previously mentioned, an attempt to increase these placard speeds will represent a revision of the basic structural design data and as such will usually require an appreciable amount of reinvestigation for purposes of determining whether the airplane structure can withstand the airloads incident to the increased performance. As a rule only the airplane manufacturer or an experienced engineer can efficiently make the necessary investigations. The Administrator does not initiate such studies.

(2) *Engine placard limits.*—The airplanes discussed above in most instances do not display the engine placard limits specified in the current requirements. In these cases when the rated power of the engine being installed exceeds that of the engine installation being replaced the following engine operation limits should be displayed:

Maximum, except takeoff horsepower, not to exceed the output of the originally approved engine installation which is being replaced.

Takeoff (1 minute) horsepower, limited by:

Approved takeoff rating of engine.
Status of propeller used.
Strength of engine mount structure.
Fuel flow capacity.
Engine cooling requirements.

For cases in which engine placard limits were determined as part of the original approval of the airplane, the use of an engine with rated power different from that of the engine being replaced will require the display of new placard limits corresponding with the maximum permissible output determined by the following:

Maximum, except takeoff horsepower, limited by:

Approved rating of engine.
Status of propeller used.
Strength of engine mount structure.
Fuel flow capacity tests. (There are a few supercharged installations for which the maximum, except takeoff, rating is greater than the takeoff rating. Therefore, the maximum, except takeoff power,

is used in determining the fuel flow required.)

Full power longitudinal stability characteristics with rearmost center of gravity.

Engine cooling tests.

Design power used in original analysis.

Takeoff (1 minute) horsepower, limited by items listed above.

(3) *Inspection and flight tests.*—Following receipt and approval by the Administrator of file data satisfactorily accounting for the change in engine as discussed in the foregoing paragraphs, the usual inspection and a recheck of certain flight tests will be authorized. The extent of the flight tests will depend upon the nature of the replacement with respect to the original approval.

It will be of interest to designers to note that provision for future increases in engine power and airplane performance can easily be made in the original design by the following methods:

Assume a power loading of 12 pounds per horsepower in determining the maneuvering load factors.

Design the engine mount, adjacent structure, and powerplant installation for the maximum power which might possibly be used in the future.

Assume a design level speed (V_L) considered high enough for all future operations. In this connection it should be noted that speed placards refer to "indicated" airspeeds and that the corresponding actual airspeed may therefore exceed the placard speed at altitudes above sea level.

(b) *The conversion of an approved type landplane or seaplane to approved skiplane status.*—There are two distinct steps involved in obtaining the Administrator's approval of an airplane equipped with skis. These are as follows:

Approval of the ski model.

Approval of the airplane equipped with approved skis.

It should be noted that the approval of a ski and the approval of a ski installation are two separate cases. The Administrator's approval of a ski for a specified static load for quantity production under a type certificate does not imply approval of the ski installed on any certificated airplane. It means only that the ski itself is satisfactory. This is true also in the case of a single set of skis where no type certificate is involved.

(1) *Approval of the ski model.*—The strength of all skis must be substantiated before they may be used on certificated aircraft, whether or not the designer or manufacturer desires to obtain a type certificate for the skis.

(2) *Approval of an airplane equipped with approved skis.*—Certain airplane models are already approved with certain specific approved skis installed. The owner of a certificated airplane of some such model wishing to install skis, need only install skis of the model with which airplanes of his model are approved and his airplane will be approved with the skis installed, upon the satisfactory completion of an inspection of the installation by a CAA representative. Should changes in the landing gear be necessary to accommodate the skis, the owner, of course, must make the changes in accordance with the change data approved by the Administrator. If the airplane is of a model which has not been approved with the installation of skis of the particular approved model it is desired to install, the procedure hereinafter outlined should be followed:

Technical data showing any changes in the landing gear should be submitted to the Administrator for approval. This is not often necessary, as skis are usually designed to attach to the axles in place of the wheels.

Upon approval of the change data, if any, the installation must pass a satisfactory inspection by a representative of the Administrator.

During this inspection, the representative will obtain the weight of the ski installation and the weight of the wheel installation which has been replaced.

Upon completion of a satisfactory inspection, the representative will witness takeoffs and landings, and other demonstrations if deemed necessary, of the airplane equipped with skis. The characteristics of the airplane equipped with skis must be acceptable to the Administrator's representative.

If the airplane inspected and tested is

a standard airplane of a certain model and the skis installed are approved under a type certificate and manufactured under a production certificate or if the skis are manufactured under an approved type certificate, all airplanes of this model will be considered eligible for approval when equipped with skis of the model installed on the airplane inspected. The aircraft specification will identify the approval accordingly.

If the skis installed are not approved under an approved type certificate or were not manufactured under a production certificate, each airplane so equipped must undergo the tests above in order to be eligible for approval. The notes on the pertinent aircraft specification will list this distinction.

(c) *Increase in gross weight.*—An increase in gross weight will naturally require that the structure be able to withstand greater loads in flying and landing. There is usually involved, therefore, a study of the original design data and the preparation of a partial strength analysis, preferably by the manufacturer of the airplane. Likewise, the flying characteristics will be affected, so flight tests are usually required. Increases in weight are often accompanied by changes in weight distribution, the effects of which are covered in section 18.1–2 (c). Increases in gross weight for specific industrial purposes, such as crop dusting, may be permitted, provided that the requirements of Part 8 (Restricted Category) of this subchapter (i. e. the Civil Air Regulations) have been complied with.

(d) *Change in weight distribution.*—Any change in the location of items having considerable weight or the addition of new items (equipment, etc.) may have serious effects on the flight behavior of an airplane. When any changes in weight distribution are made, it is the repair agency's responsibility to determine, by computation or reweighing, whether or not the approved limits, which appear on the airplane specification in the case of later models, will be exceeded. If they are, approval cannot be granted unless the structure is substantiated for the new limits and it is shown that the new limits are in compliance with all flight requirements as proved by means of a flight test.

It is of the greatest importance to realize that flight characteristics not only become worse gradually with rearward displacement of the center of gravity, but that a condition sometimes exists or will finally be reached where a small change in weight will have very large effects. For this reason, care should be taken not to install items to the rear of the rearward c. g. limit for which the aircraft was originally approved. Removal of items forward of the forward c. g. limit for which the aircraft was originally approved will have a similar effect. Increasing the weight forward of the wing will tend to disturb the balancing in flight and might make the landing conditions dangerous. Naturally, the effects of weight changes will be greater nearer the nose and the tail. Reasonably small changes within the portion covered by the wing are not usually serious from a balance or stability standpoint. For details regarding weight and balance procedure, see section 18.30–16.

(e) *Installation of new items.*—In addition to the effects on weight and weight distribution discussed in this section there is a danger that a piece of new equipment, if improperly installed will cause local loads which might seriously damage the airplane structure. It should be remembered that in flight maneuvers and in landing, it is possible to develop inertia forces such that an item will impose a load of several times its own weight on the supporting structure. For instance, a 35-pound storage battery supported by a fuselage cross tube will have the effect of weight of an applied load of over 100 pounds on the cross tube during a hard landing. If the cross tube was not originally designed for this load, it will probably fail or bend. The greatest danger arises when such a partial failure occurs in landing, without being noticed, as the structure might then fail completely during some subsequent flight.

(f) *Alterations or modifications of control surfaces and systems.*—Any change in the size of control surfaces affects the loading conditions for the airplane structure and therefore requires additional strength analyses, static tests, or both. Flight tests are usually required also. One should be particularly warned against making minor changes on control surfaces, since the original design often just meets certain requirements for flutter prevention. No

balancing weights should be removed or added without consulting the manufacturer and finally obtaining a Flight Operations and Airworthiness Inspector's approval. The importance of retaining the proper balance and rigidity of airplane control surfaces during repair and maintenance work cannot be underestimated. In order to preclude the occurrence of flutter in a control surface, a degree of static and/or dynamic balance is established for each model of aircraft. Failure to check and retain the original or maximum allowable degree of balance may allow serious hazards to safe flight to exist in an airplane.

The development of new materials and construction techniques has made possible lighter control surfaces, for a given area, on many postwar airplanes than were used on some older airplanes. The effect of using these lighter surfaces, insofar as flutter is concerned, is to make the surface more sensitive to weight changes. Repair can cause a greater change in weight distribution, or center of gravity, than would be the case with the heavier surfaces. Since control surfaces are, in some models, only balanced to the degree necessary to obtain flutter-free operation up to the maximum speed for which the airplane is designed in the original, undamaged condition, repairs to these lighter surfaces should be carefully considered from the standpoint of how they affect the balance of the surface. This is true whether or not it has a balance weight. Therefore, any structural repairs to control surfaces should be performed with due consideration of the effect of such rework on the balance of the surface: the repair work should be done in a manner so that the original or maximum allowable static unbalance is not exceeded; or counter-balance forward of the hinge line should be added, when possible, to retain the original or maximum allowable static unbalance. When the static unbalance cannot be brought within the limits and in the manner prescribed by the manufacturer, the control surface must be discarded.

Special attention is called to the indiscriminate application of extra coats of dope or paint to a control surface. In some instances, the application of extra coats of dope or paint has resulted in unsatisfactory control surface balance conditions. Proper maintenance of control surface balance conditions may require removal of dope or paint down to the base coat prior to application of new finish coatings.

In line with proper maintenance for the prevention of flutter, the "water-tightness" of the original control surface should be retained. Instances of flutter have occurred due to the high unbalance of a control surface arising from trapped water or ice within the surface. Therefore, either the original "water-tightness" or water drainage provisions should be checked and retained during maintenance work.

In addition to improperly balanced surfaces, improperly maintained trim tab systems can contribute greatly to the possibility of flutter occurrence. Trim tabs, in most cases, are not balanced and flutter is prevented by providing a rigid trim tab mechanism. In order to keep the weight of the main surface aft of the hinge line as light as possible, trim tabs and their actuating mechanisms are built as lightly as possible. This fact together with the vibratory nature of airflow at the tab can create a mechanism which is highly susceptible to wear and deformation. In service use, therefore, the tab rigidity may be decreased to an unsafe value.

In maintaining trim tabs and their actuating mechanism, only a minor amount of wear can be tolerated, in comparison to the rest of the airplane. The maximum free-play that is acceptable is 2½% of the chord, measured at the trailing edge. For example, a tab which has a chord of four inches at one point along its span, would have a permissible free-play of 4″ x .025 or 0.100″ (total motion up and down) measured at that location on the trailing edge. Any slack in excess of this amount should be eliminated by overhauling the system.

(g) *Fairing and cowling modifications.*— Although changes in fairing can usually be made without impairing the airworthiness of the aircraft, it has been found that certain airplanes are very sensitive to slight changes in body lines, windshield designs, and filleting. Obviously, any change in engine cowling affects the cooling and thereby introduces possibilities of malfunctioning or failure of the engine.

Low wing airplanes are usually supplied with wing-fuselage fillets which prevent tail buffet-

ing. Any alteration of such fillets may be dangerous. The manufacturer should be consulted regarding such changes.

(h) *Appliance installations.*—The aircraft and appliance manufacturer's instructions for installation of equipment should be closely followed. In particular, the recoil from flares should be provided for and, in the case of position lights, where certain angular limits are required, the light manufacturer's mounting instructions should be followed.

(i) *Batteries.*—Batteries should be installed in accordance with the instructions contained in sections 3.682 through 3.684, 4a.571, and 4b.621 of the Civil Air Regulations. It should be noted that dry batteries are not considered satisfactory for the operation of position lights.

(j) *Powerplant changes.*—The powerplant installation on a certificated aircraft has been thoroughly checked in accordance with rules based on a study of accident and service records covering several years of operation of all types of aircraft. These records show that many accidents are due to improper installation in small details concerning the fuel or oil system, cowling, manifolding, and items of a like nature. It is, therefore, unwise to make any changes without careful consideration.

When changes appear to be necessary in the powerplant installation, the manufacturer of the aircraft should be consulted. If the manufacturer has no data concerning such a change, a Flight Operations and Airworthiness Inspector should be consulted to determine if the airworthiness of the airplane will be adversely affected by making the change.

(k) *Propeller changes.*—With reference to propeller changes, the pertinent aircraft specification states the type of propeller which is approved. A large diameter propeller should not be used without investigation, because it may result in unsatisfactory ground clearance and resultant damage to the tips. Furthermore, a change to a propeller of appreciably different diameter, either larger or smaller, or different pitch, might in some cases result in unsafe performance.

(18 F. R. 7431, Nov. 21, 1953, effective Nov. 30, 1953.)

18.30–18 *Periodic and 100-hour inspections.—(CAA rules which apply to section 18.30 (c)).*

(a) *General.*—The inspecting agency shall employ an inspection form as checklist while performing a periodic or 100-hour inspection. Such form may be developed by the mechanic, repair station, or the manufacturer similar to the example given in appendix D, or provide the scope and detail of the items of inspection set forth in subdivisions (i) through (xi) of subparagraph (1) of this paragraph.

(1) *Inspection procedures.*—Prior to inspection, all necessary inspection plates, access doors, fairing and cowling shall be opened or removed and the aircraft and engine thoroughly cleaned to properly reveal the actual condition of the parts being inspected. Airworthiness of the aircraft shall be determined by thoroughly inspecting the pertinent items in subdivisions (i) through (xi) of this subparagraph in accordance with instructions contained in the aforementioned subdivisions, manufacturer's inspection procedures, supplemental service information, and standard inspection practices. The aircraft shall conform with CAA aircraft specifications, airworthiness directives, or other approved data before being checked as airworthy.

(i) *Fuselage and hull group.*—The fuselage and/or hull shall be carefully inspected for general condition; fabric or skin for deterioration, distortion, other evidence of failure, and security of attachment of fittings. The various systems and components installed in this group shall be checked to assure that they are properly installed with no apparent defects and are operating satisfactorily. When applicable, the same general inspection procedures will apply to lighter-than-air craft and a determination made of the condition of the envelope, gas bags, ballast tanks, etc. Rotary-wing-type aircraft or other craft utilizing rotor drive shafts or other similar systems shall have the shafts inspected in accordance with the manufacturer's maintenance manual.

(ii) *Cabin and cockpit group.*—The cabin and cockpit shall be checked for clean-

liness and/or loose equipment which might foul the controls; seats and safety belts for condition and apparent defects; windows and windshields for deterioration or breakage; instruments for condition, mounting, marking, and, where practicable, proper operation; flight and engine controls for proper installation and operation; batteries for installation and proper charge; the various systems for installation, general condition, apparent and obvious defects and security of attachment. The above inspection procedure will also apply to the control car of lighter-than-air craft.

(iii) *Engine and nacelle group.*—All necessary engine cowling shall be removed and a visual inspection shall be made of the entire engine section for evidence of excessive oil, fuel, or hydraulic leaks. Any and all leaks shall be traced to their origin so that they may be corrected. All studs and nuts shall be checked for tightness or obvious defects. The general internal condition of the engine shall be determined by checking cylinder compression, condition of screens and sump drain plugs for foreign material and metal particles. Cylinders with weak compression shall be removed and the internal condition and clearances checked for tolerances. The engine mount shall be inspected for cracks, tightness of mounting, and security of engine attachment to mount. The flexible vibration dampeners shall be examined to insure they are in good condition. The engine controls shall be examined for defects, proper travel, and safetying; lines for leaks and hoses and clamps for condition and tightness. Exhaust stacks shall be checked for cracks or other defects and satisfactory attachments. Accessories shall be examined for apparent defects and security of mounting. The various systems shall be inspected for proper installation, general condition, defects, and attachment. Cowling shall be inspected for cracks or other defects. On rotary-wing-type aircraft the main rotor transmission gear box shall be inspected for obvious defects as outlined in the manufacturer's maintenance manual.

(iv) *Landing gear group.*—The landing gear shall be examined for general condition and security of attachment of all units. Shock-absorbing devices shall be in good condition and oleo fluid level shall be proper height. All linkage, trusses, and members shall be inspected for evidence of undue or excessive wear, fatigue, distortion, and security of attachment. The retracting and locking mechanisms, when installed, shall be examined for satisfactory operation. Hydraulic lines shall be checked for leakage and electrical systems for chafing and proper operation of switches. The wheels shall be removed and examined for cracks or other defects, condition of bearings, tires for wear or cuts, and brakes for proper adjustment. If floats or skis are installed, they shall be inspected for security of attachment, general condition, and any obvious or apparent defects.

(v) *Wing and center section group.*—The airworthiness of the wing and center section group shall be determined by thoroughly inspecting the complete assemblies for general condition, fabric or skin for deterioration, distortion, other evidences of failure, and for security of attachment. This inspection shall include the various systems installed which make up a complete wing assembly. Rotary-wing-type aircraft shall be inspected in accordance with the manufacturer's maintenance manual.

(vi) *Empennage group.*—The complete empennage assembly shall be inspected for general condition; fabric or skin for deterioration, distortion, other evidences of failure, and for security of attachment. Components and systems which make up the complete assembly shall receive the same attention and it shall be determined that they are installed properly and operating satisfactorily. Lighter-than-air craft shall be inspected in the same manner. Helicopters shall have the tail rotors inspected in accordance with the manufacturer's maintenance manual.

(vii) *Propeller group.*—All parts of the propeller shall be carefully examined for cracks, nicks, bends, or oil leakage, if hydraulically controlled. All bolts shall be properly torqued and safetied. The propeller anti-icing devices shall be checked for proper operation or obvious defects. The control mechanism shall operate satisfactorily, be securely mounted, and controls operate through full range of travel.

(viii) *Radio group.*—Radio and electronic equipment shall be inspected for installation and security of mounting. Wiring and conduits shall be checked for proper routing and security of mounting to prevent short-circuiting and to insure that there are no other obvious defects. Bonding and shielding will be determined to be properly installed and in good condition. All antenna shall be inspected for condition and security and, if installed, trailing antenna mechanism shall be inspected for proper operation.

(ix) *Miscellaneous group.*—When installed, the miscellaneous items of equipment shall be inspected to determine that the component or assembly is installed in accordance with accepted standard practices, and that the items are operating satisfactorily.

(x) *Operational check — preflight.*—Prior to releasing an aircraft as airworthy for operation the engine or engines shall be run up to determine satisfactory performance by the power output (static and idle r. p. m), magneto drop, fuel and oil pressure, cylinder an oil temperatures in accordance with the manufacturer's recommendations.

(xi) *Aircraft maintenance record entries.*

(*a*) *Periodic or 100-hour inspections.*—Where the aircraft is found to be in an airworthy condition after a periodic or 100-hour inspection, the mechanic, repair station, or manufacturer releasing the aircraft to service shall enter the following notation, inserting the type of inspection (i. e., 100-hour or periodic) in the aircraft maintenance records over the mechanic's signature and certificate number, repair station's or manufacturer's name, signature of authorized personnel, certificate number, and include time in service and date of inspection:

"I certify that this aircraft has been inspected in accordance with (*insert type*) inspection and was determined to be in airworthy condition."

(*b*) *Unairworthy aircraft.*—Where the aircraft is found unairworthy because of needed maintenance or repairs or is found not to meet the requirements of the applicable specifications or airworthiness directives or other approved data, such unairworthy items may be corrected by the inspecting mechanic, repair station, or manufacturer. In the event required maintenance is to be performed by a person other than the one who conducted the periodic inspection, the person making the periodic inspection shall provide the aircraft owner or lessee with a signed and dated copy of a list of the discrepancies and make the following statement in the aircraft maintenance records over the mechanic's signature and certificate number, the repair station's or manufacturer's name, signature of authorized personnel, certificate number, and include aircraft time in service and date of inspection:

"I certify that this aircraft has been inspected in accordance with a periodic inspection and a list of the discrepancies and unairworthy items dated (date) has been provided for the aircraft owner or lessee."

The aircraft owner or his agent shall obtain a ferry flight authorization, in accordance with Part 1, of this subchapter, prior to ferrying an aircraft for the purpose of obtaining required maintenance or correcting discrepancies.

(Published in 21 F. R. 3181, May 15, 1956, effective July 17, 1956.)

18.30–19 *Progressive inspection.* — (*CAA rules which apply to section 18.30 (c)*).

(a) *General.*—The progressive inspection is designed to permit the increased utilization of an aircraft, particularly a multiengine type, by scheduling inspections through the use of a planned inspection schedule.

(b) *Routine and detailed inspections.*—The inspection system will consist of a routine inspection which provides a visual examination or check of the aircraft and its components and systems insofar as practicable, without disassembly, and a detailed inspection which will permit a thorough examination of the aircraft and its components and systems by such disassembly as necessary. Since the overhaul of a component or system includes a thorough examination, such overhaul will be considered to be a detailed inspection. The frequency and detail of both the routine and detailed inspections shall provide complete inspection of the aircraft within each 12 calendar months and

be consistent with the manufacturer's recommendations, field service experience, and the type of operation in which the aircraft is engaged to insure that the aircraft and its components and sytems are in an airworthy condition and conform with the applicable CAA aircraft specifications, airworthiness directives, or other approved data. Such inspections shall include, but not be limited to, the items specified in appendix D.

(c) *Inspection schedule.*—The frequency of both inspections shall be outlined in the form and manner specified in the example of progressive inspection schedule contained in appendix D, and shall specify the intervals when the inspections or overhauls will be performed, either in hours or days, as appropriate.

(d) *Inspection procedures.*—A progressive inspection shall be conducted in accordance with the following procedures:

(1) The aircraft shall be inspected completely at the commencement of a progressive inspection. Thereafter, routine and detailed inspections shall be conducted at regular intervals in accordance with the inspection schedule. Normally, all inspection shall be conducted by the inspecting agency having responsibility for the progressive inspection of such aircraft. However, where an aircraft is en route when inspections become due, routine and detailed inspections may be performed by an appropriately rated and certificated mechanic or repair station, or the manufacturer provided such inspections are conducted in accordance with the forms and procedures to be furnished by the inspecting facility which would otherwise conduct the inspection of the aircraft. Upon completion of the inspection, such inspection forms shall be returned to the inspecting agency furnishing the forms for their records. When an aircraft is no longer to be inspected in acordance with a progressive inspection, the first periodic will be due within 12 calendar months after the last complete inspection of the aircraft under the progressive. If passengers are carried for hire the 100-hour inspection will be due within 100 hours after such last complete inspection. A complete inspection of the aircraft, for the purpose of determining when the periodic and 100-hour inspections are due, will require a detailed inspection of the aircraft and all its components in accordance with the progressive inspection. For example, a routine inspection of the aircraft and a detailed inspection of several components will not be considered to be a complete inspection.

(e) *Records.*—Upon the satisfactory completion of a routine or detailed inspection conducted in accordance with a progressive inspection system, the mechanic, repair station, or manufacturer conducting such inspection shall enter a brief description of the extent of the inspection accomplished and the following statement in the aircraft maintenance records, over the mechanic's signature and certificate number, the repair station's or manufacturer's name, signature of authorized personnel, certificate number, and include time in service and date of inspection:

"A routine inspection of (*identify whether aircraft or components*) and a detailed inspection (*identify components*) were performed in accordance with a progressive inspection and the aircraft is released to service."

(Published in 21 F. R. 3182, May 15, 1956, effective July 17, 1956.

18.30–20 *Procedures covering major alteration of approved radio equipment.*—(*CAA interpretations which apply to section 18.30 (b)*).

(a) *Radio equipment approved under Part 16 of the Civil Air Regulations.*

(1) When any major alteration is accomplished on radio equipment type certificated prior to January 1, 1953, such equipment shall comply with the requirements of Part 16 which were effective on the date of its type certification, provided the environmental test procedures contained in RTCA Paper 100–54/DO–60 may be used in lieu of the test procedures prescribed under Part 16.

(2) When any major alteration is accomplished on radio equipment type certificated on or after January 1, 1953, such equipment shall comply with the requirements of Part 16 and RTCA Paper 100–54/DO–60,[10] which are the environmental test requirements specified in section 16.30–3.

(20 F. R. 7535, Oct. 8, 1955, effective Oct. 31, 1955.)

[10] RTCA Paper 100–54/DO–60 was made effective as part of radio equipment type certification requirements by section 16.30–3, as amended on April 15, 1955. The amendment made no changes in the requirements contained in RTCA Paper 50–52/DO–44 which was referred to in section 16.30–3, effective January 1, 1953.

18.30–21 *Testing approved radio equipment after alteration.—(CAA policies which apply to section 18.30 (b)).*—Where a CAA representative approval of major alteration to approved radio equipment is required, it will be necessary that such equipment, prior to such approval and at the discretion of the CAA representative, be subjected to any or all tests prescribed in Part 16 or the pertinent Technical Standard Order as applicable in order to determine whether the equipment meets the prescribed airworthiness requirements.

(20 F. R. 7535, Oct. 8, 1955, effective Oct. 31, 1955.)

[18.30–22 *Radio systems.—(CAA policies which apply to section 18.30).*—Aircraft radio systems should be maintained, repaired, altered, and installed in accordance with the equipment manufacturer's maintenance instructions or manuals and the following recommended standards:

[(a) *Wiring.*—Radio systems should be wired to minimize the possibility of fire or smoke hazards or unsatisfactory operations of the radio equipment.

[(1) The radio systems should be connected to the airplane electrical system at a terminal strip or by a plug and receptacle connection. Protective devices (fuses or circuit breakers) should be installed in the load circuit. These should, in general, be selected on the basis of the highest rating that will adequately protect the cable. All loads should be connected in such a manner that the master switch of the aircraft will interrupt the circuit when the master switch is opened.

[(i) If a terminal strip is used, it should be designed or mounted so that loose metallic objects cannot fall across the terminal posts. Posts should be No. 6 or larger to permit proper tightening of the nuts, thus providing maximum current carrying capacity without a danger of shearing the studs.

[(ii) If a plug and receptacle type of connection is used, the soldered connections of the wire to the plug and receptacle inserts should be individually insulated from each other and from other metallic parts of the plug and receptacle.

[(2) Junction boxes should be used for enclosure of terminal strips. The boxes should be made from a fire-resistant, nonabsorbent material, such as aluminum alloy, or an acceptable plastic material. They should be of sufficiently rigid construction to prevent "oil-canning" of the box sides, thus avoiding the possibility of the sides causing internal shorts. They should be designed and installed to permit easy access to the enclosed terminals and to allow any loose metallic parts to fall away from the terminals. Sufficient space should be provided in the junction box so that it will not be necessary to bend the wires sharply as they leave the terminal strip. The terminal strip should be mounted within the box rather than on the inside of the box cover.

[(3) Interconnecting wires and cables between various pieces of radio equipment should be supported by insulated clamps so that they do not rub against the airplane or each other under vibration conditions encountered in flight.

[(b) *Location of radio equipment.*—The equipment, controls, and indicators should be located where they can be satisfactorily operated and read respectively from the appropriate crew member station. The equipment should be so located that there is sufficient air circulation to avoid overheating of the equipment. Also, clearance should be provided between high temperature areas of the equipment and readily flammable parts of the airplane.

[(c) *Mounting of radio equipment.*—The equipment should be attached to the airplane by means of locking devices to prevent loosening in service from vibration. Examples are self-locking nuts, serrated washers, cotter pins, self-locking holddown clamps, or snap-slides and holddown assembly nuts which are safety wired. Mechanical remote control devices should have the control cable so routed and so supported as to prevent kinking, binding or abrasion. Items mounted on shock mounts should have sufficient clearance for normal vibration and swaying of the equipment without hitting adjacent equipment or parts of the airplane. Electrical and mechanical cables to shock-mounted equipment should be routed and supported so that they will not be unduly stressed by motion of the equipment. In order that the occupants will not be endangered by moving equipment during minor crash landings, the equipment mounting

and rack should be capable of withstanding ultimate accelerations for which the airplane was designed.

[(d) *Bonding.*—Radio equipment should be bonded to the airplane in order to provide a low-resistance ground circuit and to minimize radio interference from static electrical charges. Nonconducting finishes, such as paint and anodizing films, should be carefully removed from the attachment surface under the bonding terminal. Bonding jumpers should be as short as practicable and be installed in such manner that the resistance of each connection does not exceed 0.003 ohm. Where a jumper is for radio-noise prevention only and not for current carrying purposes, a resistance of 0.01 ohm is satisfactory. Aluminum alloy or tinned- or cadmium-plated copper jumpers[11] should be used for bonding aluminum alloy parts and copper, brass or bronze jumpers should be used to bond steel parts.

[(e) *Available power supply.*—To preclude overloading the electric power system of the airplane when additional equipment is added, an electrical load analysis should be made to determine whether the available power is adequate. Radio equipment should operate satisfactorily throughout the voltage range of the aircraft electrical system under taxi, takeoff, slow cruise, normal cruise, and landing operating conditions. If night and instrument flight is contemplated, the electrical load analysis should be computed for the above flight regimes under the most adverse temperature conditions with night and instrument flight.

[(f) *Elimination of engine ignition noise.*

[(1) The most effective method of minimizing engine ignition interference is to shield the ignition system. This involves enclosing in metal all parts of the circuits which might radiate noise. Ignition wires having a metallic-braid covering and special end connectors should be used between the magneto and spark plugs. The primary leads to the magneto and the magneto switch itself should be shielded. Shielded-type spark plugs and a shielded metal cover for the magneto, if it is not of a shielded type, should be provided. All connections in the shielding system should be tight metal to metal contact.

[(2) If it is not feasible to shield the engine ignition system, the engine ignition noise may be suppressed by replacing the spark plugs with resistor spark plugs of a type approved for the engine.

[(3) If it is found that despite shielding of the ignition wiring and plugs an intolerable noise level is present in the radio system, it may be necessary to provide a filter between the magneto and magneto switch to attenuate the noise. This may consist of a single bypass capacitor or a combination of capacitors and choke coils. When this is done, the shielding between the filter and magneto switch can usually be eliminated and the special shielded magneto switch need not be used.

[Supporting brackets and wiring details for magneto filters should be in conformance with standard aircraft electrical practice. The reliability of the magneto filter installation should be at least equivalent to that of the remainder of the magneto ground lead installation.

[(g) *Antennas, general.*[12]—It is satisfactory to use one antenna for transmission and reception of communications provided such antenna is a satisfactory compromise for the frequencies to be used. In a single-antenna installation of this type, the antenna should be connected to the receiver and be switched automatically to the transmitter when the microphone "push-to-talk" switch is actuated.

[(1) Fixed and trailing wire antenna installations should be tailored to fit the particular type of aircraft. Other types of antennas are much more compact and may be installed as complete units on various types of aircraft.

[11 When aluminum or its alloys are in contact with most metals (exceptions are magnesium and zinc), current will flow from the aluminum to the other metals. The result will be that the aluminum will corrode. In order to minimize such corrosion, metals other than magnesium and zinc when in contact with aluminum should be cadmium plated. Where contact between dissimilar metals cannot be avoided, care should be taken to minimize corrosion by putting a protective coating on the finished connection.

[12 Since all radio communication and navigation equipment necessitates the use of antennas for transmission or reception of radio frequency energy, care should be exercised in the design and installation of antennas and their coupling to the radio equipment. Consideration should be given to the fact that a transmitting antenna is a tuned circuit and that its ability to radiate radio frequency energy into space is governed primarily by the relationship between its length and the frequency of the power to be radiated. In general, the higher the frequency to be transmitted, the shorter the antenna necessary. Receiver antenna design and installation is controlled primarily by the degree of directivity necessary for the particular communication or navigation equipment.

[(2) Masts used to support a fixed-wire antenna should be as long as practicable to separate the antenna from the fuselage and/or wings in order to provide an effective antenna. Masts should be firmly attached to the airplane structure. If an antenna is attached at the trailing edge of wings and leading edge of horizontal stabilizers, the attachment should be made to lugs firmly fixed to the structure. The lugs should be welded, riveted, clamped, or bolted, whichever method is most suitable to the structure.

[(h) *Range receiver antennas (200 to 400 kc.).*—A T, L, or V type antenna should be used and mounted on the top or bottom of the airplane (see fig. 1) with an approximate clearance of 1 foot from the fuselage and wings. The main leg of the T or L and each leg of the V antenna should be a minimum of 6 feet long.[13] A whip antenna may also be used for range reception. However, since the signal output fed from such an antenna generally is less than that obtained from the other types of antennas mentioned above, a careful check should be made of the completed installation to insure that satisfactory operation will be obtained.

[(i) *Direction finding antennas (100 to 1750 kc.).*—Manual or automatic loop-type antennas are used with direction finder receivers. The loops are designed for use with a particular receiver. Connecting wires between the loops and receivers are also designed for the specific equipment. Accordingly, only components meeting the specification characteristics of the receiver manufacturer should be used.

[(1) Loops enclosed in streamlined housings or exposed loops are satisfactory for external mounting on an airplane. Loops may also be installed internally in the airplane when proper attention is given to avoiding interference from metallic structure and skin of the airplane.

[(2) The outstanding characteristic of a loop antenna is its directional sensitivity which makes it useful as an accurate navigational device. Various things can reduce this accuracy and should be avoided. Metallic base paints should not be used on the housing. Location of the loop near an engine which has poor ignition shielding should be avoided since this location makes it difficult to detect the "null." Loops should be mounted as far as practical from antennas and interfering metal structures. The preferred locations are on the fore-and-aft centerline of the aircraft either above or below the fuselage. In determining the location, consider the space necessary both inside and outside of the fuselage, structural requirements, length of cables, location of the radiocompass unit, and effect on operation and maintenance of the aircraft. Also choose the mounting location to provide a balanced quadrantal error. Quadrantal error is that installation error caused by the metal in the fuselage, wings, etc., distorting the electromagnetic field of a received signal and resulting in azimuth reading inaccuracies which are greatest between the four cardinal points with respect to the centerline of the aircraft. When making an installation on the lower part of the fuselage, do not fasten the loop to a primary structural member since, in the event of a landing with landing gear retracted, the aircraft may be severely damaged. Mount the loop so that it will be level during normal flight.

[(3) Following installation of the loop, it will be necessary to check the direction of the radio bearings every 45 degrees from the fore-and-aft axis of the aircraft (preferably every 15 degrees) in order to determine and compensate [14] for the deviations caused by distortion of the radio field pattern due to the wing, engine nacelle, antennas, and other parts of the aircraft. If the loop is of the type which includes compensating means, it is important that no compensation be present in the loop at the time this calibration is made. If the loop has no provision for adjustment of quadrantal error, the calibration data should be used for the preparation of a correction card to be mounted in the cockpit near the indicator to provide the pilot with corrected bearing information.

[13] Excessively long antennas are unsatisfactory because they are more directive in reception than relatively short ones. A trailing-wire type of antenna will not prove suitable when used with a range receiver because it is highly directive; may cause a loss of distinct "cone of silence"; and changes in the airplane's direction which may occur often in range flying cause the antenna to "whip," resulting in breakage and loss of reception. The whipping action may also cause the course signals to shift continuously.

[14] Compensation of a loop for such error requires technical knowledge of the equipment and its operational use and should be accomplished by a qualified technician.

[(i) The calibration may be made on the ground for installations in which the loop is on top of the aircraft, but the accuracy of the calibration should be checked in the air. However, for installations in which the loop is beneath the fuselage, the use of the flight method is necessary if accuracy is to be obtained.

[(ii) Select a medium- or high-powered radio station between 25 and 100 miles distant from the locality at which the test is to be conducted. The radio station selected should not be on a congested channel or on a channel where high-powered adjacent channel signals can, by slight mistuning, cause bearing errors. The station should normally provide good bearings with little or no fluctuation of the indicator pointer.

[(iii) Select a day when the wind is less than 8 miles per hour in order to avoid excessive drift angles, and when the air is smooth to avoid errors in reading the bearing angles. Do not make the calibrations within 2 hours of sunrise or sunset or when wide fluctuations of bearings are noted.

[(iv) Select a landmark or series of landmarks such as a road, railroad tracks, section lines, etc., which will provide a direct line toward the radio station. Since powerlines or railroads on or adjacent to the landmarks can distort the radio path, make a check to determine whether or not distortion is present. This can be done by crossing the reference line at various angles while maintaining fixed courses by means of the directional gyro. If the bearing changes rapidly as the line is approached, distortion is present and should be eliminated by flying at a higher altitude, or by selecting a new reference landmark.

[(v) With the aircraft in level flight, fly directly toward the station along the reference line at an altitude low enough to avoid parallax error. When passing over some predetermined point or intersecting line to the reference, record simultaneously the indicator bearing and the directional gyro reading.

[(vi) Repeat the above procedure until sufficient readings have been taken at all required bearings. Since the radiocompass deviation changes to some extent with frequency, take calibration data at several frequencies to ensure greater accuracy in use.

[(vii) Calibration data obtained for a particular type of airplane is usable without modification for all aircraft of that type if the location of the loop and other antennas is the same. Since all aircraft of the same type may not have the same radio installations, an accurate diagram with antenna dimensions and exact loop location will add to the usefulness of the recorded data.

[(j) *HF transmitting antenna—fixed.*

[(1) Two basic types of fixed antennas are used. One of these, the Hertz type, is tuned to its resonant frequency or a higher harmonically related frequency by being designed to a specific length. The lowest frequency at which this type antenna will be resonant is its fundamental frequency. At this frequency the antenna is approximately one-half wavelength. This length may be determined by the formula:

$$\text{½ wavelength (in feet)} = \frac{300{,}000{,}000 \times 3.28}{2 \times f}$$

in which 300,000,000 is the velocity of the propagation of radio waves in meters per second; 3.28 is the conversion factor from meters to feet; f is the frequency in cycles per second.

[(2) The other basic type of antenna is the Marconi. This type is readily adaptable for use on different frequencies and has one end grounded through the transmitter to the metallic aircraft structure. Thus, the aircraft acts as a part of the antenna and it is possible to use only one-quarter wavelength in the antenna proper. This length may be computed by the formula:

$$\text{¼ wavelength (in feet)} = \frac{300{,}000{,}000 \times 3.28}{4 \times f}.$$

An antenna of this type shorter than ¼ wavelength may be tuned to resonance with the transmitter frequency by connecting an induction or load coil having appropriate characteristics in series with the antenna. A continuously variable coil or a stepped variable coil may be used for transmission on several different frequencies on one antenna.

[(k) *VHF transmitting antenna—"Whip" and streamlined blade.*—(See fig. 2.)

[(1) The "whip" antenna is resonant through a narrow frequency band and may be used with equipment operating in the 118 to

136 mc. band. The proper length in inches should be determined from the formula $\frac{11{,}218}{4 \times f\ (\text{mc})}$. (For 125 mc. the length (¼ wavelength) of the antenna would be approximately 22.5 inches.)

[(2) When it is necessary to cover a broader frequency range than can be covered by the "whip" antenna, a blade type should be used, because it is resonant over a much broader frequency range. However, a broadband antenna is not as efficient as a small diameter "whip" antenna and, accordingly, should not be used with relatively low output transmitters (under 5 watts).

[(3) Antennas of both these types should be located so that there is a minimum of structure between them and the ground radio stations. Thus, the location will usually be a compromise. The antennas may be mounted on the top or bottom of the fuselage or on the cowl forward of the cockpit.

[(4) On fabric-covered aircraft, or aircraft with other types of nonmetallic skin, the manufacturer's recommendations should be followed in order to provide the necessary ground plane. An acceptable method of accomplishing this is by providing a number of metal foil strips in a radial position from the antenna base and secured under the fabric or wood skin of the aircraft as shown in figure 3.

[(l) *VHF navigation receiving antennas.*—Antennas for omnirange (VOR), and instrument landing system (ILS) localizer receivers should be located at a position on the airplane where they will have the greatest sensitivity for the desired signals and minimum response to undesired signals such as VHF energy radiated by the engine ignition system. The best location for the VOR-localizer receiving antenna on most small airplanes is over the forward part of the cabin. (See fig. 4). The rigid V-type antenna should be mounted so that the apex of the V points forward and the plane of the V is level in normal flight. A list of satisfactory antenna installations on some popular small airplanes, giving distance in inches aft of the windshield follows:

Piper	7	Swift	11
Ercoupe	26	Bellanca	4
Stinson	13	Luscombe	34
Cessna	10	Beech Bonanza	35

[(m) *Marker receiving antenna.*—The marker receiver operates at a frequency of 75 mc. In order to keep to a minimum the number of antennas on an airplane, the marker receiver may utilize the same antenna as the range receiver. However, both receivers should include provisions to permit simultaneous operation without interference. A "whip" or other vertical type of antenna should not be used for marker reception since the ground facility transmits from a horizontally polarized antenna.

[(n) *Glide slope receiving antenna.*—The glide slope receiver of the instrument landing system (ILS) utilizes a small, simple, dipole type antenna which should be mounted at right angles to the longitudinal axis of the airplane and near the forward part of the airplane. Several types of localizer and glide slope antennas are shown in figure 5.

[(o) *Distance measuring antennas.*—Antennas for Vortac distance measuring elements or civil DME should be mounted at an unobstructed location on the underside of the fuselage near the trailing edge of the wing, preferably at the lowest point on the aircraft when in level flight. (See fig. 6.) During flight, the antenna should be as nearly vertical as possible. It should be mounted as far as possible from other antennas and at least 36 inches away from other obstructions. If separate antennas are used for transmission and reception, the antennas should be mounted on a line perpendicular to the longitudinal axis of the aircraft with a minimum spacing of two feet between antennas. Since transmission line losses are relatively high at these frequencies, the antenna connecting cables should be kept as short as possible (10 feet maximum unless special low loss cable is used).]

(22 F. R. 601, Jan. 30, 1957, effective Feb. 20, 1957.)

Appendix A

Forms

Forms to which reference has been made throughout Civil Aeronautics Manual 18 are reproduced in appendix A.

Instructions for Completing Form ACA–337 (4–52), Major Repair and Alteration Form.

Form ACA–337 is used to record all major repairs and alterations made by or under the supervision of a certificated mechanic, and for all major alterations made by a certificated repair station or manufacturer. (Ref. CAM sections 18.22–1 and 18.22–2.) This form is furnished by the CAA free of charge and is available at all Flight Operations and Airworthiness District Offices. It should be noted that the form is divided into 8 major parts. The following instructions and explanations, numbered 1 through 8, apply to the corresponding parts of the form:

1. *Aircraft.* Information to complete the blocks "make", "model", and "serial number" will be found on the aircraft manufacturer's name plate which usually is located in the aircraft cockpit. The "nationality and registration mark" is the same as that entered in space 1 of the Certificate of Registration, CAA Form ACA–500.

When the repair or alteration is made to a component or appliance not installed on an aircraft, the aircraft identification blocks will be left blank. The information will be entered later by the person installing the component or appliance.

2. *Owner.* The aircraft owner's complete name and address should be entered in these spaces. The spaces will be left blank if the form is being completed for a spare component or appliance.

3. (*No Title*) The information blocks under Part 3 are used to identify the airframe, powerplant, propeller or appliance repaired or altered. It is necessary to complete the blocks for only the unit repaired or altered.

4. *Aircraft Weight and Balance Data.* This part is used to show the aircraft empty weight, empty center of gravity and useful load after the repair or alteration has been completed. The computations for determining these figures should be furnished as part of the information and data entered under Part 8. These blocks will be left blank if the unit repaired or altered is a spare component.

5. *Conformity Statement.* (a) "Agency's name and address." This part is used to identify the mechanic, repair station or manufacturer accomplishing the repair or alteration. Mechanics will enter their complete name (given, middle and surname) and their permanent mailing address. Manufacturers and repair stations will enter the name and address under which they do business.

(b) "Kind of agency." The only foreign certificated mechanic authorized to perform major repairs or alterations on U. S. Civil Aircraft, at this time, is one who possesses a current and valid mechanic certificate of competency issued by the Canadian Government. Canadian mechanics are given this authority by Special Civil Air Regulation Serial Number SR–377 adopted by the CAB November 13, 1951.

(c) "Certificate number." Mechanics should enter in this block the number and rating of their mechanic certificate (CAA Form ACA–1710); for example, "M–17560, Airframe and Powerplant." Repair stations should enter their Air Agency Certificate Number (CAA Form ACA–390) and the rating or ratings under which the work was performed. For example, "018, Airframe Class I" or "019 Limited Airframe." Manufacturers will enter their Type and Production Certificate Number (CAA Form ACA–331 and ACA–333 respectively). Manufacturers altering TSO appliances will enter the TSO number of the appliance altered.

(d) (*No Title*) This space is used to certify that the repair or alteration was made in accordance with current Civil Air Regulations. When the work was performed or supervised by a certificated mechanic not employed by a manufacturer or repair station, he should sign his name on the line "signature of authorized individual" and enter the date the repair or alteration was completed. Repair stations and manufacturers are permitted to authorize persons in their employ to sign this conformity statement. The fact that the conformity statement was signed by an authorized person does not relieve the repair station or manufacturer of responsibility for compliance with Part 18 and other applicable Civil Air Regulations.

6. *Approval for Return to Service.* CAR 18.11 establishes the conditions under which airframe, powerplant, propeller, and appliance major repairs or alterations may be returned

to service. This portion of the form is used to indicate approval or rejection of the repair or alteration and to identify the person or agency making the airworthiness inspection.

Mechanics authorized to exercise the privileges of CAR 24.43 should indicate their findings by checking the "approved" or "rejected" block, check the block "other" and insert in the space following "Inspection Authorization." The "Identification Number" following the mechanic's signature should be the mechanic certificate number. This number is shown on the "Inspection Authorization," Form ACA–2354.

Manufacturers are authorized to perform repairs and alterations and return to service any unit manufactured by them. Repair stations are authorized to return to service units which have been repaired or altered under the terms of their repair station certificate. The person authorized to sign this approval may or may not be the same person authorized to sign the conformity statement under Part 5. In any event, the manufacturer or repair station is responsible for determining whether the unit repaired or altered is airworthy for return to service.

7. To be Completed by CAA Personnel. **This part is used for administrative purposes within the CAA. Only authorized CAA employees shall make entries in this part.**

8. *Description of Work Accomplished.* **It is important that the description include the location of the repair or alteration; for example, if a repair was made to a steel tube fuselage, the description entered in this part might start by saying, "Replaced lower left longeron from station 60 aft (continue with description of repair)." This description should incorporate technical data necessary to substantiate the airworthiness of the repair or alteration, by reference to the figures and tables in this manual, manufacturers' service bulletins or Airworthiness Directives. Weight and balance computations, stress analyses, test reports, sketches or photographs, should be incorporated when appropriate.**

If additional space is needed to describe the repair or alteration, attach additional sheets bearing the aircraft nationality and registration mark and the date the work was completed.

U. S. DEPARTMENT OF COMMERCE
CIVIL AERONAUTICS ADMINISTRATION

Form approved.
Budget Bureau No. 41-R052.4.

MAJOR REPAIR AND ALTERATION FORM (AIRFRAME, POWERPLANT, PROPELLER OR APPLIANCE)

1. AIRCRAFT	MAKE	MODEL	SERIAL NO.	NATIONALITY AND REGISTRATION MARK

2. OWNER	NAME (*First, middle, last*)	ADDRESS (*Street and number, city, zone and State*)

3. COMPLETE ONLY FOR UNIT REPAIRED AND/OR ALTERED. DESCRIBE WORK ACCOMPLISHED ON REVERSE IN ACCORDANCE WITH CIVIL AERONAUTICS MANUAL 18.

UNIT	MAKE	MODEL	SERIAL NO.	NATURE OF WORK (*Check*)	
				MAJOR REPAIR	MAJOR ALTERATION
a. AIRFRAME	◆◆◆◆◆◆◆◆◆◆◆◆◆◆◆◆◆◆◆◆ (*As described in item 1 above*) ◆◆◆◆◆◆◆◆◆◆◆◆◆◆◆◆◆◆◆◆				
b. POWERPLANT					
c. PROPELLER					
d. APPLIANCE	TYPE AND MANUFACTURER				

4. AIRCRAFT WEIGHT AND BALANCE DATA
**AFTER the repairs and/or alterations described below were made.*

This item must be completed by repair or alteration agency. However, in the case of a spare component, it will not be completed until such component is installed in an aircraft. At this time, it will be completed by the installing agency, if applicable.

CATEGORY	EMPTY WEIGHT (*Pounds*)*	EMPTY CENTER OF GRAVITY (*Inches from datum*)*	USEFUL LOAD (*Pounds*)*

5. CONFORMITY STATEMENT (*Complete and check*)

a. AGENCY'S NAME AND ADDRESS	b. KIND OF AGENCY	c. CERTIFICATE NO.
	☐ U. S. Certificated Mechanic. ☐ Foreign Certificated Mechanic. ☐ Certificated Repair Station. ☐ Manufacturer. ☐ (Check if repair or alteration was made under delegation option procedures.)	

d. I certify that the repair and/or alteration made to the unit(s) identified under item 3 above and described on the reverse or attachments hereto have been made in accordance with the requirements of Part 18 of the U. S. Civil Air Regulations and that the information furnished herein is true and correct to the best of my knowledge.

(Date repair and/or alteration completed) _____ (Signature of authorized individual) _____

6. APPROVAL FOR RETURN TO SERVICE (*Check and complete appropriate items*)

Pursuant to the authority specified below the unit identified in item 3 was inspected in the manner prescribed by the Administrator and is

☐ APPROVED ☐ REJECTED } BY { ☐ CAA Designee ☐ CAA Aviation Safety Agent ☐ Manufacturer ☐ Repair Station ☐ Canadian Department of Transport Inspector of Aircraft ☐ Other (*Specify*)

(Date of approval or rejection) _____ (Signature of authorized individual; title or identification number) _____

7. TO BE COMPLETED ONLY BY CAA PERSONNEL

a. ☐ Forwarded for engineering comment ☐ See attached memorandum

b. ☐ Accepted _____ (Date) ☐ Reinspected _____ (Date) ☐ Spot Checked _____ (Date)

(CAA designation number) _____ (Signature Aviation Safety Agent) _____

18—54010-6 Form ACA-337 (4-52)

INSTRUCTIONS

This form must be completed in duplicate each time a major repair and/or alteration is made of an aircraft, airframe, powerplant, propeller or appliance. After the repair and/or alteration has been inspected and item 6 completed, the original copy of this form will be made available to the aircraft owner for retention as part of the aircraft records. The duplicate copy is retained by the CAA for administrative purposes.

See CAM 18 for detailed instructions concerning the information to be furnished with this form and instructions concerning its preparation.

6. DESCRIPTION OF WORK ACCOMPLISHED.*

*If additional space is needed attach additional sheets bearing aircraft nationality and registration mark and date work completed.

Check block if additional sheets are attached. ☐

Reverse of Form ACA–337 (4–52)

[Instructions for Completing Form ACA–1226 (11–55), Malfunctioning and Defects Report

[The Civil Aeronautics Administration urges all aircraft operators, mechanics, and repair stations to submit this form for service difficulties experienced with airframes, powerplants, propellers and appliances. Repair stations are required by Civil Air Regulations 52.47 and Civil Aeronautics Manual 52.47–1 to submit a report of all serious difficulties in, or other recurring conditions, of airframe, powerplant or propellers and appliances.

[The ACA–1226 form is franked, self-addressed, and available free of charge at all CAA General Safety District Offices, and from many airport managers.

[Please furnish all available pertinent information; manufacturer's name, part numbers, serial numbers, and the date failure occurred is essential. The ACA–1226 form, together with attachments such as sketches, photographs and/or failed parts, may be mailed or delivered to any GSDO for forwarding to the appropriate CAA Washington or regional office.

[The information obtained from these reports is published as General Maintenance Inspection Aids and Alert Bulletins each month and summarized annually for a nominal charge by the Government Printing Office. Active participation in reporting service difficulties will materially contribute to a complete and accurate interchange of service experience of general aircraft. Since the reports may be reviewed in the General Maintenance Aids and Alert Bulletins, no individual acknowledgment will be made of receipt of the ACA–1226 forms. The ACA–1226 form is not required if the same incident is reported on Form ACA–2400, Pilot/Operator's Aircraft Accident Report, or on CAB 453, Aircraft Accident Report.]

U. S. DEPARTMENT OF COMMERCE
CIVIL AERONAUTICS ADMINISTRATION

Budget Bureau No. 41-R485.11

MALFUNCTIONING AND DEFECTS REPORT

1 COMPLETE ALL ITEMS →	AIRCRAFT	ENGINE	PROPELLER	SPECIFIC PART WHICH CAUSED DIFFICULTY	
	MAKE AND MODEL			NAME OF PART AND PART NO.	HRS. SINCE OVERHAUL
	SERIAL NO.				TOTAL TIME
	REGISTRATION NO. N-				

2 IDENTIFY THE MALFUNCTIONING OR DEFECTIVE PART. DESCRIBE THE MALFUNCTION OR DEFECT AND THE CIRCUMSTANCES UNDER WHICH IT OCCURRED. STATE PROBABLE CAUSE AND RECOMMENDATIONS FOR RECURRENCE

DATE OF SUBMISSION:

Form ACA-1226 (11-55)

Malfunctioning and Defects Report (Face)

3 SKETCH OF MALFUNCTION OR DEFECT—OTHER COMMENTS

REPORT SUBMITTED BY (*Name and address*)

☐ REPAIR STATION ☐ OPERATOR ☐ MECHANIC ☐ CAA AGENT ☐ CAB INVESTIGATOR

U. S. DEPARTMENT OF COMMERCE
CIVIL AERONAUTICS ADMINISTRATION
WASHINGTON 25, D. C.

OFFICIAL BUSINESS

PENALTY FOR PRIVATE USE TO AVOID PAYMENT OF POSTAGE, $300 (GPO)

TO:
CIVIL AERONAUTICS ADMINISTRATION

MAIL IMMEDIATELY (No postage required)

Malfunctioning and Defects Report (Back)

Instructions for Use of Form ACA–2350, Aircraft Use and Inspection Report

[*Registration No.*—Self-explanatory.

[*Serial No.*—Refer to manufacturer's nameplate installed in aircraft.

[*Name of Owner as Shown on Certificate of Registration.*—Should be the current registered owner's name.

[*Permanent Mailing Address of Owner.*—Should agree with address shown on registration certificate.

[*Aircraft is Based at—Airport*..... *State of*.....—Enter the official name of the airport at which the aircraft is normally based, as shown in the Airman's Guide or the aeronautical charts. This will be followed by the name of the State in which the airport is located.

[*Aircraft Make.*—Refer to the pertinent aircraft specification and the manufacturer's nameplate.

[*Aircraft Model.*—Show complete model as listed on aircraft specification and the manufacturer's nameplate.

[*Engine Make.* Refer to the pertinent engine specification and the manufacturer's nameplate.

[*Engine Model.*—Show complete model as listed on engine specification and the manufacturer's nameplate.

[*Date of Previous Periodic Inspection.*—May be obtained from aircraft maintenance records.

[*Signature of Conductor This Inspection.*—The signature of the inspecting mechanic or the person authorized by either the repair station or the manufacturer inspecting the aircraft.

[*Name of Inspecting Agency.*—Type or print the name of the mechanic, repair station, or manufacturer inspecting the aircraft.

[*To Be Completed by Washington Office.*—This space on the first and second line, bracketed by heavy line, is for statistical purposes of the Washington Office only.

[*Date of Inspection.*—This should be the date the inspection was completed and must coincide with the date placed in the aircraft maintenance records.

[*Aircraft Time in Service Previous 12 Months.*—This shall be the time in service for the 12 months' period immediately preceding the inspection being reported.

[*Aircraft Total Time in Service.*—Should be obtained from the aircraft records and reflect the total time the aircraft has been flown since manufactured.

[*Primary Use of Aircraft.*—Check only one box to indicate the usage which accounted for the highest percentage of flight hours recorded for the previous 12 months. (See list entitled "Primary Use of Aircraft".)

[*Type Inspecting Agency.*—Indicate in the appropriate box the type agency conducting the inspection.

[*Type Inspection.*—Self-explanatory.

[*Condition of Aircraft.*—Self-explanatory.

[*Type of Certificate and Number.*—The certificate and number of the mechanic, repair station, or manufacturer releasing the aircraft. (For example, A&P #100, CRS #10, T.C. #1, or P.C. #2.)

[*Region and District Office.*—This information is to be inserted by the General Safety District Office responsible for reviewing the form and forwarding it to the Washington Office.

[Mechanics holding inspection authorizations, appropriately rated repair stations, and aircraft manufacturers may obtain Forms ACA–2350 from their local district office. Such forms require no postage and will bear the address of the appropriate district office. To avoid damage in handling, the form should be stapled before mailing.

(Rev. 5/1/58)

Primary Use of Aircraft

Use	*Definition*
[1. Business Transportation—Corp. (Company, Corporation, or partnership operated).	Transportation of persons or goods, not for compensation or hire, in connection with a business, and operated by a company, corporation, or business partnership.
[2. Business Transportation—Indiv.	Transportation of persons or goods, not for compensation or hire, in connection with a business, and operated by an individual for personal or company/corporate business.
[3. Personal Flying	Trip flights, such as vacation trips, air tours, and other cross-country pleasure flights and local flights, such as sightseeing, local hops, practice flights, etc.
[4. Aerial Application	The use of aircraft for work purposes which concern the production of foods and fibres, health control, and in which the aircraft is used in lieu of farm implements or ground vehicles for the particular task accomplished. (Includes spraying, dusting, seeding, agitation, etc.)
[5. Instructional	All dual and solo flight training in aircraft, under an instructor's supervision.
[6. Air Taxi, Charter, Contract.	All transportation (including private and common carriage) of passengers and cargo for compensation or hire involving the use of small aircraft.
[7. Patrol, Survey, Misc. Work Use.	The use of aircraft for work purposes in which the aircraft is used as an elevated platform for inspections and appraisals of terrain and structures. (Includes patrolling, mapping, photography, mineral prospecting, civil air patrol, etc.)
[8. Other	All other operations. (Experimentation, air shows, advertising, demonstrations, ferry flights, etc.) Specify.

U. S. DEPARTMENT OF COMMERCE—CIVIL AERONAUTICS ADMINISTRATION

AIRCRAFT USE AND INSPECTION REPORT

Form Approved.
Budget Bur. No. 41-R1678.1

AIRCRAFT REGISTRATION NO: N-

AIRCRAFT MFR SERIAL NO

NAME OF OWNER (As shown on Certificate of Registration)

PERMANENT MAILING ADDRESS OF OWNER

Number and Street

City

County State

AIRCRAFT IS BASED AT

Airport State of

AIRCRAFT MAKE | AIRCRAFT MODEL

ENGINE MAKE | ENGINE MODEL

DATE OF PREVIOUS PERIODIC INSPECTION

SIGNATURE OF CONDUCTOR OF THIS INSPECTION

NAME OF INSPECTING AGENCY

FOR INSTRUCTIONS ON USE OF FORM SEE CAM-18

Area within block border to be completed by Washington Office

STATE	COUNTY	A W	A O	T O	A/C MAKE	MODEL	TYPE	NO. ENG.

DATE OF INSPECTION	ENG MAKE	MODEL	HORSEPOWER	YR. MFD.

AIRCRAFT TIME IN SERVICE PREVIOUS 12 MONTHS HRS.

AIRCRAFT TOTAL TIME IN SERVICE HRS.

PRIMARY USE OF AIRCRAFT (Check one box only)

1 ☐ Business Transportation—Corp.
2 ☐ Business Transportation—Indiv.
3 ☐ Personal Flying
4 ☐ Aerial Application
5 ☐ Instructional
6 ☐ Air Taxi, Charter, Contract
7 ☐ Patrol, Survey, Misc. Work Use
8 ☐ Other—Specify _____

TYPE INSPECTING AGENCY

3 ☐ Inspection Authorization 5 ☐ Manufacturer 6 ☐ Repair Station

TYPE OF INSPECTION

1 ☐ Periodic 2 ☐ Progressive

CONDITION OF AIRCRAFT

8 ☐ Airworthy 9 ☐ Unairworthy

TYPE OF CERTIFICATE AND NUMBER

CAA REGION AND DISTRICT OFFICE

(To be completed by CAA Inspector)

U. S. GOVERNMENT PRINTING OFFICE 1958 O-F-454895

Form ACA-2350 (1-58)

[Aircraft Use and Inspection Report (Face)

POSTAGE AND FEES PAID
DEPARTMENT OF COMMERCE

To: Civil Aeronautics Administration
General Safety District Office No. ____
Mailing Address

U. S. DEPARTMENT OF COMMERCE
CIVIL AERONAUTICS ADMINISTRATION
WASHINGTON 25, D. C.

OFFICIAL BUSINESS

[Aircraft Use and Inspection Report (Back)]

(Rev. 5/1/58)

Appendix B

Tables

Tables to which reference has been made throughout Civil Aeronautics Manual 18 are presented in appendix B. These tables complement the various sections of CAM 18.30 and the numbers assigned to them have been developed and codified to each section of CAM 18.30. For instance, the first table relating to CAM 18.30–2 is numbered 2–1. This number (2–1) picks up the section number within CAM 18.30 and then by appending a dash followed by sequential numbering 1, 2, 3, etc., indicates which table within the section is being referenced. For example, table 2–1 is the first table within section 2 of CAM 18.30.

TABLE 2-1—*Selection and Properties of Aircraft Wood*

Species of wood	Strength properties as compared to Spruce	Maximum permissible grain deviation (slope of grain)	Remarks
1	2	3	4
Spruce (Picea) Sitka (P. Sitchensis) Red (P. Rubra) White (P. Glauca).	100%	1:15	Excellent for all uses. Considered as standard for this table.
Douglas Fir (Pseudotsuga Taxifolia).	Exceeds spruce	1:15	May be used as substitute for spruce in same sizes or in slightly reduced sizes providing reductions are substantiated. Difficult to work with hand tools. Some tendency to split and splinter during fabrication and considerable more care in manufacture is necessary. Large solid pieces should be avoided due to inspection difficulties. Gluing satisfactory.
Noble Fir (Abies Nobiles).	Slightly exceeds spruce except 8 percent deficient in shear.	1:15	Satisfactory characteristics with respect to workability, warping, and splitting. May be used as direct substitute for spruce in same sizes providing shear does not become critical. Hardness somewhat less than spruce. Gluing satisfactory.
Western Hemlock (Tsuga Heterophylla).	Slightly exceeds spruce	1:15	Less uniform in texture than spruce. May be used as direct substitute for spruce. Upland growth superior to lowland growth. Gluing satisfactory.
Pine, Northern White (Pinus Strobus).	Properties between 85 percent and 96 percent those of spruce.	1:15	Excellent working qualities and uniform in properties but somewhat low in hardness and shock-resisting capacity. Cannot be used as substitute for spruce without increase in sizes to compensate for lesser strength. Gluing satisfactory.
White Cedar, Port Oxford (Charaecyparis Lawsoniana).	Exceeds spruce	1:15	May be used as substitute for spruce in same sizes or in slightly reduced sizes providing reductions are substantiated. Easy to work with hand tools. Gluing difficult but satisfactory joints can be obtained if suitable precautions are taken.
Poplar, Yellow (Liriodendrow Tulipifera).	Slightly less than spruce except in compression (crushing) and shear.	1:15	Excellent working qualities. Should not be used as a direct substitute for spruce without carefully accounting for slightly reduced strength properties. Somewhat low in shock-resisting capacity. Gluing satisfactory.

(*See notes on opposite page.*)

NOTES (Table 2–1.)

1. Defects Permitted.
   (a) *Cross grain.* Spiral grain, diagonal grain, or a combination of the two is acceptable providing the grain does not diverge from the longitudinal axis of the material more than specified in column 3. A check of all four faces of the board is necessary to determine the amount of divergence. The direction of free-flowing ink will frequently assist in determining grain direction.
   (b) *Wavy, curly, and interlocked grain.* Acceptable if local irregularities do not exceed limitations specified for spiral and diagonal grain.
   (c) *Hard knots.* Sound hard knots up to ⅜ inch in maximum diameter acceptable providing: (1) they are not in projecting portions of I-beams, along the edges of rectangular or beveled unrouted beams or along the edges of flanges of box beams (except in lowly stressed portions); (2) they do not cause grain divergence at the edges of the board or in the flanges of a beam more than specified in column 3; and (3) they are in the center third of the beam and are not closer than 20 inches to another knot or other defect (pertains to ⅜-inch knots—smaller knots may be proportionately closer). Knots greater than ¼ inch should be used with caution.
   (d) *Pin knot clusters.* Small clusters acceptable providing they produce only a small effect on grain direction.
   (e) *Pitch pockets.* Acceptable in center portion of a beam providing they are at least 14 inches apart when they lie in the same growth ring and do not exceed 1½ inches length by ⅛ inch width by ⅛ inch depth and providing they are not along the projecting portions of I-beams, along the edges of rectangular or beveled unrouted beams or along the edges of the flanges of box beams.
   (f) *Mineral streaks.* Acceptable providing careful inspection fails to reveal any decay.
2. Defects Not Permitted.
   (a) *Cross grain.* Not acceptable unless within limitations noted in 1 (a).
   (b) *Wavy, curly, and interlocked grain.* Not acceptable unless within limitations noted in 1 (b).
   (c) *Hard knots.* Not acceptable unless within limitations noted in 1 (c).
   (d) *Pin knot clusters.* Not acceptable if they produce large effect on grain direction.
   (e) *Spike knots.* These are knots running completely through the depth of a beam perpendicular to the annual rings and appear most frequently in quarter-sawed lumber. Wood containing this defect should be rejected.
   (f) *Pitch pockets.* Not acceptable unless within limitations noted in 1 (e).
   (g) *Mineral streaks.* Not acceptable if accompanied by decay (see 1 (f)).
   (h) *Checks, shakes, and splits.* Checks are longitudinal cracks extending, in general, across the annual rings. Shakes are longitudinal cracks usually between two annual rings. Splits are longitudinal cracks induced by artificially induced stress. Wood containing these defects should be rejected.
   (i) *Compression wood.* This defect is very detrimental to strength and is difficult to recognize readily. It is characterized by high specific gravity, has the appearance of an excessive growth of summer wood, and in most species shows but little contrast in color between spring wood and summer wood. In doubtful cases the material should be rejected or samples should be subjected to a toughness machine test to establish the quality of the wood. All material containing compression wood should be rejected.
   (j) *Compression failures.* This defect is caused from the wood being overstressed in compression due to natural forces during the growth of the tree, felling trees on rough or irregular ground or rough handling of logs or lumber. Com-

414269 O - 57 - 10

pression failures are characterized by a buckling of the fibers that appear as streaks on the surface of the piece substantially at right angles to the grain, and vary from pronounced failures to very fine hair lines that require close inspection to detect. Wood containing obvious failures should be rejected. In doubtful cases the wood should be rejected or further inspection in the form of microscopic examination or toughness tests made, the latter means being the more reliable.

(k) *Decay.* All stains and discolorations should be examined carefully to determine whether or not they are harmless or preliminary or advanced decay. All pieces should be free from rot, dote, red heart, purple heart, and all other forms of decay.

TABLE 2-2—*Cold-Setting Synthetic-Resin Glues*[1]

Designation	Type	Approximate working life at 75° F. in hours	Designation	Type	Approx. working life at 75° F. in hours
Amberlite PR-115	Resorcinol	4	Le Page's Panite	Room-temperature urea	4
Bakelite BC-17613	do	4	Penacolite G-1124	Resorcinol	2-3
Bakelite BCU-1	Room-temperature urea	4	Penacolite G-1131	do	2½-3
Bakelite BCU-5	do	4	Penacolite G-1215	do	3
Bakelite BCU-12772	do	4	Perkins L-100	Room-temperature urea	4
Cascamite ANS	do	4	Perkins D-110	do	5
Cascamite 12	do	5-6	Perkins DC-246	do	5
Cascamite 66	do	4	Perkins R-55	Resorcinol	2
Cascamite 77	do	5-6	Perkins RP-60	do	2
Cascamite 151	do	1¾	Phenac Resin Adhesive 703	do	5
Cascophen RS-216	Resorcinol	3¾	Plaskon 201-2	Room-temperature urea	4
Cascophen RS-224	do	3-4	Plaskon 250-2	do	4
Cascophen RS-232	do	3-4	Plyophen 6000	Resorcinol	4
Casco Resin No. 5	Room-temperature urea	4	Synvaren PLS	do	2½-3½
Casco Resin No. 5	do	5-6	Synvarite U	Room-temperature	4-5
Casco Resin 135	do	8-9	Synvarol WR-513	do	2-3
Durez 12688	Resorcinol	3	Uformite 430	do	3-4
Durite 2989	Room-temperature urea	5	Uformite 500	do	3-4
Durite 3026	Resorcinol	3	Uformite CB-552	do	3-4
Kaseno 2690	do	3	Urac 180	do	4-5
Lauxite PF90C	do	3	Urac Resin Adhesive 185	do	4½
Lauxite 77-X	Room-temperature urea	4	USP Resorcinol	Resorcinol	3½-4
Lauxite 81-MX	do	2-5	Weldwood	Room-temperature	3-4
Lauxite 224	do	3			

[1] The inclusion of any glue in this table does not constitute an endorsement on the part of any government agency or assurance that it will meet applicable specifications.

TABLE 2–3—*Minimum Recommended Bend Radii for Aircraft Plywood*[1]

Plywood thickness		10 percent moisture content, bent on cold mandrels		Thoroughly soaked in hot water and bent on cold mandrels	
		At 90° to face grain 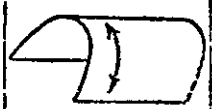	At 0° or 45° to face grain 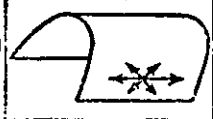	At 90° to face grain 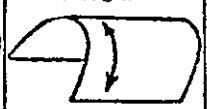	At 0° or 45° to face grain 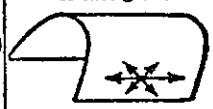
(1)	(2)	(3)	(4)	(5)	(6)
Inch	No. plies	Inches	Inches	Inches	Inches
0.035	3	2.0	1.1	0.5	0.1
.070	3	5.2	3.2	1.5	.4
.100	3	8.6	5.2	2.6	.8
.125	3	12	7.1	3.8	1.2
.155	3	16	10	5.3	1.8
.185	3	20	13	7.1	2.6
.160	5	17	11	6	2
.190	5	21	14	7	3
.225	5	27	17	10	4
.250	5	31	20	12	5
.315	5	43	28	16	7
.375	5	54	36	21	10

[1] Columns (1) and (3) may also be used for determining the maximum thickness of single laminations for curved members.

TABLE 3-1—*Textile Fabric Used in Aircraft Covering*

Materials	Specification	Minimum tensile strength new (undoped)	Minimum tearing strength new (undoped)	Minimum tensile strength deteriorated (undoped)	Thread count per inch	Use and remarks
Airplane cloth mercerized cotton (Grade "A").	Society Automotive Engineers AMS 3806 (TSO–C15 references this spec.).	80 pounds per inch warp and fill.	5 pounds warp and fill.	56 pounds per inch.	80 minimum, 84 maximum warp and fill	For use on all aircraft. Required on aircraft with wing loadings greater than 9 p. s. f., and placarded never-exceed speeds greater than 160 m. p. h.
Do	MIL–C–5646	do	do	do	do	Alternate to AMS 3806.
Airplane cloth cellulose nitrate predoped.	MIL–C–5643	do	do	do	do	Alternate to MIL–C–5646 or AMS 3806 (undoped). Finish with cellulose nitrate dope.
Airplane cloth cellulose acetate butyrate, predoped.	MIL–C–5642	do	do	do	do	Alternate to MIL–C–5646 or AMS 3806 (undoped). Finish with cellulose acetate butyrate dope.
Airplane cloth mercerized cotton.	Society Automotive Engineers AMS 3804 (TSO–C14 references this spec.).	65 pounds per inch warp and fill.	4 pounds warp and fill.	46 pounds per inch.	80 minimum, 94 maximum warp and fill.	For use on aircraft with wing loadings of less than 9 p. s. f., and placarded never-exceed speeds of less than 160 m. p. h.
Airplane cloth mercerized cotton.	Society Automotive Engineers AMS 3802 A.	50 pounds per inch warp and fill.	3 pounds warp and fill.	35 pounds per inch.	110 maximum warp and fill.	For use on gliders with wing loading of 8 p. s. f. or less, and placarded never-exceed speeds of 135 m. p. h. or less.
Glider fabric cotton.	A. A. F. No. 16128.	55 pounds per inch warp and fill.	4 pounds warp and fill.	39 pounds per inch.	80 minimum warp and fill.	Alternate to AMS 3802–A.
Aircraft linen	British DTD540					This material meets the minimum strength requirements of TSO–C15.

TABLE 3-2—*Miscellaneous Textile Materials*

Materials	Specification	Yarn size	Minimum tensile strength	Yards per pound	Use and remarks
Reinforcing tape, cotton.	MIL–T–5661	----------	150 pounds per one-half-inch width.	----------	Used as reinforcing tape on fabric and under rib lacing cord. Strength of other widths approx. in proportion.
Lacing cord, prewaxed braided cotton.	MIL–C–5649	----------	80 pounds double.	310 minimum.	Lacing fabric to structures. Unless already waxed, must be lightly waxed before using.
Lacing cord, special cotton.	U. S. Army No. 6–27.	20/3/3/3	85 pounds double.	----------	Do.
Lacing cord, braided cotton.	MIL–C–5648	----------	80 pounds single.	170 minimum.	Do.
Lacing cord thread; linen and linen-hemp.	MIL–T–6779	9 ply 11 ply	59 pounds single. 70 pounds single.	620 minimum. 510 minimum.	Do. Do.
Lacing cord thread; high-tenacity cotton.	MIL–T–5660	Ticket No. 10.	62 pounds single.	480 minimum.	Do.
Machine thread cotton.	Federal V–T–276b.	20/4 ply	5 pounds single.	5,000 normal.	Use for all machine sewing.
Hand sewing thread cotton.	V–T–276b. Type III B.	8/4 ply	14 pounds single.	1,650 normal.	Use for all hand sewing. Use fully waxed thread.
Surface tape cotton (made from AN–C–121).	MIL–T–5083	----------	80 lbs/in	----------	Use over seams, leading edges, trailing edges, outer edges and ribs, pinked, scalloped or straight edges.
Surface tape cotton	Same as fabric used.	----------	Same as fabric used.	----------	Alternate to MIL–T–5083.

TABLE 4-1—*Oxyacetylene Welding Rod Properties*

Base material	Welding Rod Specification	Welding Rod Composition—%
Plain Carbon Steel and Low Alloy Steel Such As SAE 4130 (Not heat-treated after welding).	AAF No. 10286-D, Type II, Grade 1-G or Navy 46R4b, Class 1, Type C.	Carbon 0.06 Max. Manganese 0.25 Max. Phosphorus 0.04 Max. Sulphur 0.05 Max. Silicon[1] 0.08 Max.
Plain Carbon Steel and Alloy Steel (Heat-treated after welding).	AAF No. 10286-D, Type II, Grade 2-G or Navy 46R4b, Class 1, Type B.	Carbon 0.10–0.20 Manganese 1.00–1.20 Phosphorus 0.04 Max. Sulphur 0.05 Max. Silicon 0.20–0.30

[1] Silicon content not a requirement of Specification AAF No. 10286-D.

TABLE 4-2—*Arc Welding Electrode Properties*

Base material	Electrode specification	Use
Low carbon steel and alloy steel (not heat-treated after welding).	MIL-E-6843.	DC or AC current, shallow penetration (light sections).
Low carbon steel and alloy steel (not heat-treated after welding).	MIL-E-6843.	DC reverse polarity, deep penetration (heavy sections).
Alloy steel (heat-treated after welding).	MIL-E-6843.	DC or AC current, shallow penetration (light sections).
Alloy steel (heat-treated after welding).	MIL-E-6843.	DC reverse polarity, deep penetration (heavy sections).

TABLE 4-3—*Recommended Bend Radii for 90° Bend—in Terms of Aluminum and Aluminum Alloy Sheet Thickness,* (t)

Alloy and temper	Approximate Thickness Inch					
	0.016 1/64	0.032 1/32	0.064 1/16	0.128 1/8	0.182 3/16	0.258 1/4
24S-O[1]	0	0	0	0	0-1t	0-1t
24S-T3[1, 2]	1½t-3t	2t-4t	3t-5t	4t-6t	4t-6t	5t-7t
24S-T6[1]	2t-4t	3t-5t	3t-5t	4t-6t	5t-7t	6t-10t
52S-O	0	0	0	0	0-1t	0-1t
52S-H32	0	0	0	0-1t	0-1t	½t-1½t
52S-H34	0	0	0-1t	½t-1½t	1t-2t	1½t-3t
52S-H36	0-1t	½t-1½t	1t-2t	1½t-3t	2t-4t	2t-4t
52S-H38	½t-1½t	1t-2t	1½t-3t	2t-4t	3t-5t	4t-6t
61S-O	0	0	0	0	0-1t	0-1t
61S-T4	0-1t	0-1t	1½t-1½t	1t-2t	1½t-3t	2t-4t
61S-T6	0-1t	½t-1½t	1t-2t	1½t-3t	2t-4t	2t-4t
75S-O	0	0	0-1t	½t-1½t	1t-2t	1½t-3t
75S-T6[1]	2t-4t	3t-5t	3t-5t	4t-6t	5t-7t	6t-10t

[1] Alclad sheet can be bent over slightly smaller radii than the corresponding tempers of the uncoated alloy.
[2] Immediately after quenching, this alloy can be formed over appreciably smaller radii.

TABLE 4-4—*Number of Rivets Required for Splices (Single-lap Joint) in Bare 14S-T6, 24S-T3, 24S-T36, and 75S-T6 Sheet, Clad 14S-T6, 24S-T3, 24S-T36, and 75S-T6 Sheet, 24S-T4 and 75S-T6 Plate, Bar, Rod, Tube, and Extrusions, 14S-T6 Extrusions.*

Thickness "t" in Inches	No. of A17S-T3 Protruding Head Rivets Required Per Inch of Width "W"					No. of Bolts
	3/32	1/8	5/32	3/16	1/4	AN-3
0.016	6.5	4.9	.....	.....	.....	.....
.020	6.9	4.9	3.9	.....	.....	.....
.025	8.6	4.9	3.9	.....	.....	.....
.032	11.1	6.2	3.9	3.3	.....	.....
.036	12.5	7.0	4.5	3.3	2.4	.....
.040	13.8	7.7	5.0	3.5	2.4	3.3
.051	.....	9.8	6.4	4.5	2.5	3.3
.064	.....	12.3	8.1	5.6	3.1	3.3
.081	.....	.....	10.2	7.1	3.9	3.3
.091	.....	.....	11.4	7.9	4.4	3.3
.102	.....	.....	12.8	8.9	4.9	3.4
.128	.....	.....	.....	11.2	6.2	4.2

NOTES:

a. For stringers in the upper surface of a wing, or in a fuselage, 80 percent of the number of rivets shown in the table may be used.

b. For intermediate frames, 60 percent of the number shown may be used.

c. For single lap sheet joints, 75 percent of the number shown may be used.

ENGINEERING NOTES: *The above table was computed as follows:*

1. The load per inch of width of material was calculated by assuming a strip one inch wide in tension.
2. Number of rivets required was calculated for A17ST rivets, based on a rivet allowable shear stress equal to 40 percent of the sheet allowable tensile stress, and a sheet allowable bearing stress equal to 160 percent of the sheet allowable tensile stress, using nominal hole diameters for rivets.
3. Combinations of sheet thickness and rivet size above the heavy line are critical in (i. e., will fail by) bearing on the sheet; those below are critical in shearing of the rivets.
4. The number of AN-3 bolts required below the heavy line was calculated based on a sheet allowable tensile stress of 70,000 psi and a bolt allowable single shear load of 2,126 pounds.

TABLE 4-5—*Number of Rivets Required for Splices (Single-lap Joint) in 17ST, 17ST ALCLAD, 17SRT, and 17SRT ALCLAD Sheet, Plate, Bar, Rod, Tube, and Extrusions.*

Thickness "t" in Inches	No. of A17ST Protruding Head Rivets Required Per Inch of Width "W"					No. of Bolts
	3/32	1/8	5/32	3/16	1/4	AN-3
0.016	6.5	4.9	.....	.....	.....	.....
.020	6.5	4.9	3.9	.....	.....	.....
.025	6.9	4.9	3.9	.....	.....	.....
.032	8.9	4.9	3.9	3.3	.....	.....
.036	10.0	5.6	3.9	3.3	2.4	.....
.040	11.1	6.2	4.0	3.3	2.4	.....
.051	.....	7.9	5.1	3.6	2.4	3.3
.064	.....	9.9	6.5	4.5	2.5	3.3
.081	.....	12.5	8.1	5.7	3.1	3.3
.091	.....	.....	9.1	6.3	3.5	3.3
.102	.....	.....	10.3	7.1	3.9	3.3
.128	.....	.....	12.9	8.9	4.9	3.3

NOTES:

a. For stringers in the upper surface of a wing, or in a fuselage, 80 percent of the number of rivets shown in the table may be used.

b. For intermediate frames, 60 percent of the number shown may be used.

c. For single lap sheet joints, 75 percent of the number shown may be used.

ENGINEERING NOTES: *The above table was computed as follows:*

1. The load per inch of width of material was calculated by assuming a strip one inch wide in tension.
2. Number of rivets required was calculated for A17ST rivets, based on a rivet allowable shear stress equal to 50 percent of the sheet allowable tensile stress, and a sheet allowable bearing stress equal to 160 percent of the sheet allowable tensile stress, using nominal hole diameters for rivets.
3. Combinations of sheet thickness and rivet size above the heavy line are critical in (i.e., will fail by) bearing on the sheet; those below are critical in shearing of the rivets.
4. The number of AN-3 bolts required below the heavy line was calculated based on a sheet allowable tensile stress of 55,000 psi and a bolt allowable single shear load of 2,126 pounds.

TABLE 4-6—*Number of Rivets Required for Splices (Single-lap Joint) in 52S (All Hardnesses) Sheet*

Thickness "t" in Inches	No. of A17S-T3 Protruding Head Rivets Required Per Inch of Width "W"					No. of Bolts
	3/32	1/8	5/32	3/16	1/4	AN-3
0.016	6.3	4.7				
0.020	6.3	4.7	3.8			
0.025	6.3	4.7	3.8			
0.032	6.3	4.7	3.8	3.2		
0.036	7.1	4.7	3.8	3.2	2.4	
0.040	7.9	4.7	3.8	3.2	2.4	
0.051	10.1	5.6	3.8	3.2	2.4	
0.064	12.7	7.0	4.6	3.2	2.4	
0.081		8.9	5.8	4.0	2.4	3.2
0.091		10.0	6.5	4.5	2.5	3.2
0.102		11.2	7.3	5.1	2.8	3.2
0.128			9.2	6.4	3.5	3.2

NOTES:

a. For stringers in the upper surface of a wing, or in a fuselage, 80 percent of the number of rivets shown in the table may be used.

b. For intermediate frames, 60 percent of the number shown may be used.

c. For single lap sheet joints, 75 percent of the number shown may be used.

ENGINEERING NOTES: *The above table was computed as follows:*

1. The load per inch of width of material was calculated by assuming a strip one inch wide in tension.
2. Number of rivets required was calculated for A17ST rivets, based on a rivet allowable shear stress equal to 70 percent of the sheet allowable tensile stress, and a sheet allowable bearing stress equal to 165 percent of the sheet allowable tensile stress, using nominal hole diameters for rivets.
3. Combinations of sheet thickness and rivet size above the heavy line are critical in (i. e., will fail by) bearing on the sheet; those below are critical in shearing of the rivets.

TABLE 5–1—*Aircraft Cable*

Cable size	Minimum breaking strength, pounds		
	Flexible		Nonflexible 19 wire
	7×7	7×19	
	MIL–C–1511 carbon steel	MIL–C–5424 carbon steel	MIL–C–6940 carbon steel
1/32	----------	----------	185
1/16	480	480	500
5/64	----------	----------	800
3/32	920	920	1, 200
7/64	----------	----------	1, 600
1/8	2, 000	1, 900	2, 100
5/32	2, 800	2, 600	3, 300
3/16	4, 200	3, 900	4, 700
7/32	5, 600	5, 200	6, 300
1/4	7, 000	6, 600	8, 200
9/32	8, 000	8, 000	----------
5/16	9, 800	8, 200	12, 500
11/32	12, 500	----------	----------
3/8	14, 400	12, 000	----------

TABLE 5–2—*Turnbuckle Safetying Guide* [1]

Cable size	Type of wrap	Diameter of safety wire	Material (annealed condition)
1/16	Single	0.040	Copper, brass [2]
3/32	Single	.040	Copper, brass [2]
1/8	Single	.040	Stainless steel, Monel and "K" Monel
1/8	Double	.040	Copper, brass [2]
1/8	Single	.057 min.	Copper, brass [2]
5/32 and greater	Double	.040	Stainless steel, Monel, and "K" Monel [2]
5/32 and greater	Single	.057 min.	Stainless steel, Monel, or "K" Monel [2]
5/32 and greater	Double	.051 [3]	Copper, brass

NOTES:

1. The swaged and unswaged turnbuckle assemblies are covered by AN Standard Drawings.
2. Galvanized or tinned steel, or soft iron wires are also acceptable.
3. The safety wire holes in 5/32-inch diameter and larger turnbuckle terminals for swaging may be drilled sufficiently to accommodate the double 0.051-inch diameter copper or brass wires when used.

TABLE 6-1—*Recommended Nut Torques*

(CAUTION: These Torque Values Are Derived From Oil Free Cadmium-Plated Threads)

Tap size	Tension-type nuts AN-365 and AN-310	Sheer-type nuts AN-364 and AN-320	90,000 p.s.i. in bolts AN-365 and AN-310 nuts	(60% of column 4) AN-364 and AN-320 nuts
Fine-Thread Series				
8-36	12-15	7-9	20	12
10-32	20-25	12-15	40	25
¼-28	50-70	30-40	100	60
5/16-24	100-140	60-85	225	140
3/8-24	160-190	95-110	390	240
7/16-20	450-500	270-300	840	500
½-20	480-690	290-410	1100	660
9/16-18	800-1000	480-600	1600	960
5/8-18	1100-1300	600-780	2400	1400
¾-16	2300-2500	1300-1500	5000	3000
7/8-14	2500-3000	1500-1800	7000	4200
1-14	3700-5500	2200-3300[1]	10000	6000
1⅛-12	5000-7000	3000-4200[1]	15000	9000
1¼-12	9000-11000	5400-6600[1]	25000	15000
Coarse-Thread Series				
8-32	12-15	7-9	20	12
10-24	20-25	12-15	35	21
¼-20	40-50	25-30	75	45
5/16-18	80-90	48-55	160	100
3/8-16	160-185	95-100	275	170
7/16-14	235-255	140-155	475	280
½-13	400-480	240-290	880	520
9/16-12	500-700	300-420	1100	650
5/8-11	700-900	420-540	1500	900
¾-10	1150-1600	700-950	2500	1500
7/8-9	2200-3000	1300-1800	4600	2700

[1] Estimated corresponding values.

NOTE: The above torque loads may be used for all cadmium plated steel nuts of the fine or coarse thread series which have approximately equal number of threads and equal face bearing areas.

TABLE 8-1—*Numerical System for Steel Identification*

Type of Steel	*Numerals and Digits*
Carbon Steels	1xxx
Plain Carbon Steels	10xx
Free Cutting Steels	11xx
Manganese Steels (Manganese 1.60 to 1.90%)	13xx
Nickel Steels	2xxx
3.50% nickel	23xx
5.00% nickel	25xx
Nickel Chromium Steels	3xxx
9.70% nickel, 0.70% chromium	30xx
1.25% nickel, 0.60% chromium	31xx
1.75% nickel, 1.00% chromium	32xx
3.50% nickel, 1.50% chromium	33xx
Corrosion and Heat Resisting	30xxx
Molybdenum Steels	40xx
Chromium molybdenum steels	41xx
Nickel chromium molybdenum steels	43xx
Nickel molybdenum steels	
1.75% nickel, 0.25% molybdenum	46xx
3.50% nickel, 0.25% molybdenum	48xx
Chromium Steels	5xxx
Low chromium	51xx
Medium chromium	52xxx
Corrosion and heat resisting	51xxx
Chromium Vanadium Steels	6xxx
1.00% chromium	61xx
National Emergency Steels	8xxx
Silicon Manganese Steels	9xxx
2.00% silicon	92xx

TABLE 8-2—*Hardness Values for Steel*

Rockwell hardness		Vickers diamond pyramid hardness[1]	Brinell hardness[2]		Tensile strength, 1,000 lbs. per square inch	Rockwell hardness		Vickers diamond pyramid hardness[1]	Brinell hardness[2]		Tensile strength, 1,000 lbs. per square inch
C-150 kg. load diamond	B-100 kg. load 1/16 ball		Tungsten carbide ball	Steel ball		C-150 kg. load diamond	B-100 kg. load 1/16 ball		Tungsten carbide ball	Steel ball	
53	.....	573	554	.....	283	13	94.1	211	202	193	95
52	.....	556	538	.....	273	12	93.4	207	199	190	93
51	.....	539	523	500	264	11	92.6	203	195	186	91
50	.....	523	508	488	256	10	91.8	199	191	183	90
49	.....	508	494	476	246	9	91.2	196	187	180	89
48	.....	493	479	464	237	8	90.3	192	184	177	88
47	.....	479	465	453	231	7	89.7	189	180	174	87
46	.....	465	452	442	221	6	89	186	177	171	85
45	.....	452	440	430	215	5	88.3	183	174	168	84
44	.....	440	427	419	208	4	87.5	179	171	165	83
43	.....	428	415	408	201	3	87	177	169	162	82
42	.....	417	405	398	194	2	86	173	165	160	81
41	.....	406	394	387	188	1	85.5	171	163	158	80
40	.....	396	385	377	181	0	84.5	167	159	154	78
39	.....	386	375	367	176	.....	83.2	162	153	150	76
38	.....	376	365	357	170	.....	82	157	148	145	74
37	.....	367	356	347	165	.....	80.5	153	144	140	72
36	.....	357	346	337	160	.....	79	149	140	136	70
35	.....	348	337	327	155	.....	77.5	143	134	131	68
34	.....	339	329	318	150	.....	76	139	130	127	66
33	.....	330	319	309	147	.....	74	135	126	122	64
32	.....	321	310	301	142	.....	72	129	120	117	62
31	.....	312	302	294	139	.....	70	125	116	113	60
30	.....	304	293	286	136	.....	68	120	111	108	58
29	.....	296	286	279	132	.....	66	116	107	104	56
28	.....	288	278	272	129	.....	64	112	104	100	54
27	.....	281	271	265	126	.....	61	108	100	96	52
26	.....	274	264	259	123	.....	58	104	95	92	50
25	.....	267	258	253	120	.....	55	99	91	87	48
24	.....	261	252	247	118	.....	51	95	86	83	46
23	.....	255	246	241	115	.....	47	91	83	79	44
22	100.2	250	241	235	112	.....	44	88	80	76	42
21	99.5	245	236	230	110	.....	39	84	76	72	40
20	98.9	240	231	225	107	.....	35	80	72	68	38
19[3]	98.1	235	226	220	104	.....	30	76	67	64	36
18	97.5	231	222	215	103	.....	24	72	64	60	34
17	96.9	227	218	210	102	.....	20	69	61	57	32
16	96.2	223	214	206	100	.....	11	65	57	53	30
15	95.5	219	210	201	99	.....	0	62	54	50	28
14	94.9	215	206	197	97						

[1] Vickers hardness values obtained with following loads:

	Kilograms
918 to 171, inclusive	50
167 to 95, inclusive	30
91 to 62, inclusive	10

[2] Brinell hardness values obtained with 3,000 kg. load except tungsten carbide ball values 159 to 86, inclusive, obtained with 1,500 kg. load and from 83 to 54, inclusive, with 500 kg. load.

[3] Rockwell C values below 20 are not recommended for correlation; however, these values are sufficiently accurate to indicate the trend of relationship.

TABLE 8-3—*Hardness Values for Aluminum Alloys*

Material commercial designation	Hardness temper	Brinell hardness No.
2S (pure aluminum)	O	23
	H	44
3S	O	28
	H	55
14S, forging	T	125
17S	O	45
	T	100
	RT	110
24S	O	42
	T	105
	RT	116
25S, forging	O	80
	W	100
	T	90
A51S, forging	T	90
52S	O	45
	H	85
61S	O	30
	T	95

TEMPER CODE

O—Annealed condition.
H—Maximum commercial degree of work hardening.
T—Fully heat-treated.
RT—Heat-treated and cold worked.
W—Quenched but not completely aged. W temper applies only to alloys requiring artificial aging to attain T condition.

TABLE 11-1—*Tube Data*

Tube O.D. (inches)	Wrench torque range for tightening tube nuts (inch pounds)		Minimum bend radii (inches)	
	Alum. alloy 2S½H, 52SO	Steel	Alum. alloy 2S½H, 52SO	Steel
⅛	.. ....	.....	⅜	..
3/16	.....	30-70	7/16	21/32
¼	40-65	50-90	9/16	⅞
5/16	60-80	70-120	¾	1⅛
⅜	75-125	90-150	15/16	1 5/16
½	150-250	155-250	1¼	1¾
⅝	200-350	300-400	1½	2 3/16
¾	300-500	430-575	1¾	2⅝
1	500-700	550-750	3	3½
1¼	600-900	.....	3¾	4⅜
1½	600-900	.....	5	5¼
1¾	... .	.....	7	6¼
2	.....	.....	8	7

TABLE 12-1—*Copper Electric Cable Current Carrying Capacity*

Cable size—Specification MIL-W-5086	Single cable in free air—maximum amperes	Cable in conduit or bundled—maximum amperes	Maximum resistance—ohms/1,000 feet (20° C.)	Nominal conductor area—circular mils.	Finished cable weight—pounds per 1,000 feet
AN-20	11	7.5	10.25	1,119	5.6
AN-18	16	10	6.44	1,779	8.4
AN-16	22	13	4.76	2,409	10.8
AN-14	32	17	2.99	3,830	17.1
AN-12	41	23	1.88	6,088	25.0
AN-10	55	33	1.10	10,443	42.7
AN-8	73	46	.70	16,864	69.2
AN-6	101	60	.436	26,813	102.7
AN-4	135	80	.274	42,613	162.5
AN-2	181	100	.179	66,832	247.6
AN-1	211	125	.146	81,807	----------
AN-0	245	150	.114	104,118	382
AN-00	283	175	.090	133,665	482
AN-000	328	200	.072	167,332	620
AN-0000	380	225	.057	211,954	770

TABLE 12-2—*Aluminum Electric Cable Current Carrying Capacity*

Cable size—Specification MIL-W-7072	Single cable in free air—maximum amperes	Cable in conduit or bundled—maximum amperes	Maximum resistance—ohms/1,000 feet (20° C.)	Nominal conductor area—circular mils.	Finished cable weight—pounds per 1,000 feet
AL-6	83	50	0.641	28,280	----------
AL-4	108	66	.427	42,420	----------
AL-2	152	90	.268	67,872	----------
AL-0	202	123	.169	107,464	166
AL-00	235	145	.133	138,168	204
AL-000	266	162	.109	168,872	250
AL-0000	303	190	.085	214,928	303

[TABLE 12–3—*Wire and Circuit Protector Chart*]

Wire AN gage copper	Circuit breaker amp.	Fuse amp.
22	5	5
20	7. 5	5
18	10	10
16	15	10
14	20	15
12	25(30)	20
10	35(40)	30
8	50	50
6	80	70
4	100	70
2	125	100
1		150
0		150

Figures in parentheses may be substituted where protectors of the indicated rating are not available.

Basis of Chart:

(1) Wire bundles in 135° F. ambient and altitudes up to 30,000 feet.
(2) Wire bundles of 15 or more wires, with wires carrying no more than 20 percent of the total current carrying capacity of the bundle as given in Specification MIL–W–5088 (ASG).
(3) Protectors in 75° to 85° F. ambient.
(4) Copper wire Specification MIL–W–5086 (ASG) or equivalent.
(5) Circuit breakers to Specification MIL–C–5809 or equivalent.
(6) Fuses to Specification MIL–F–15160 or equivalent.

U. S. GOVERNMENT PRINTING OFFICE : 1959 O -498407

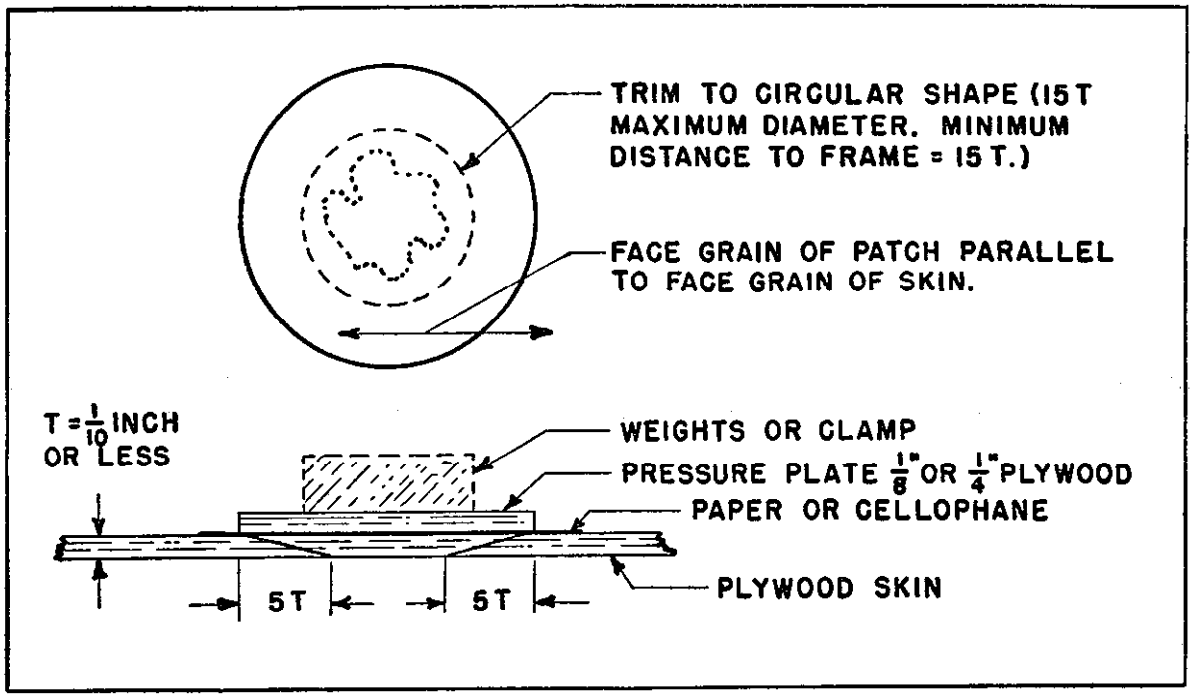

FIGURE 2–11. Splayed Patch.

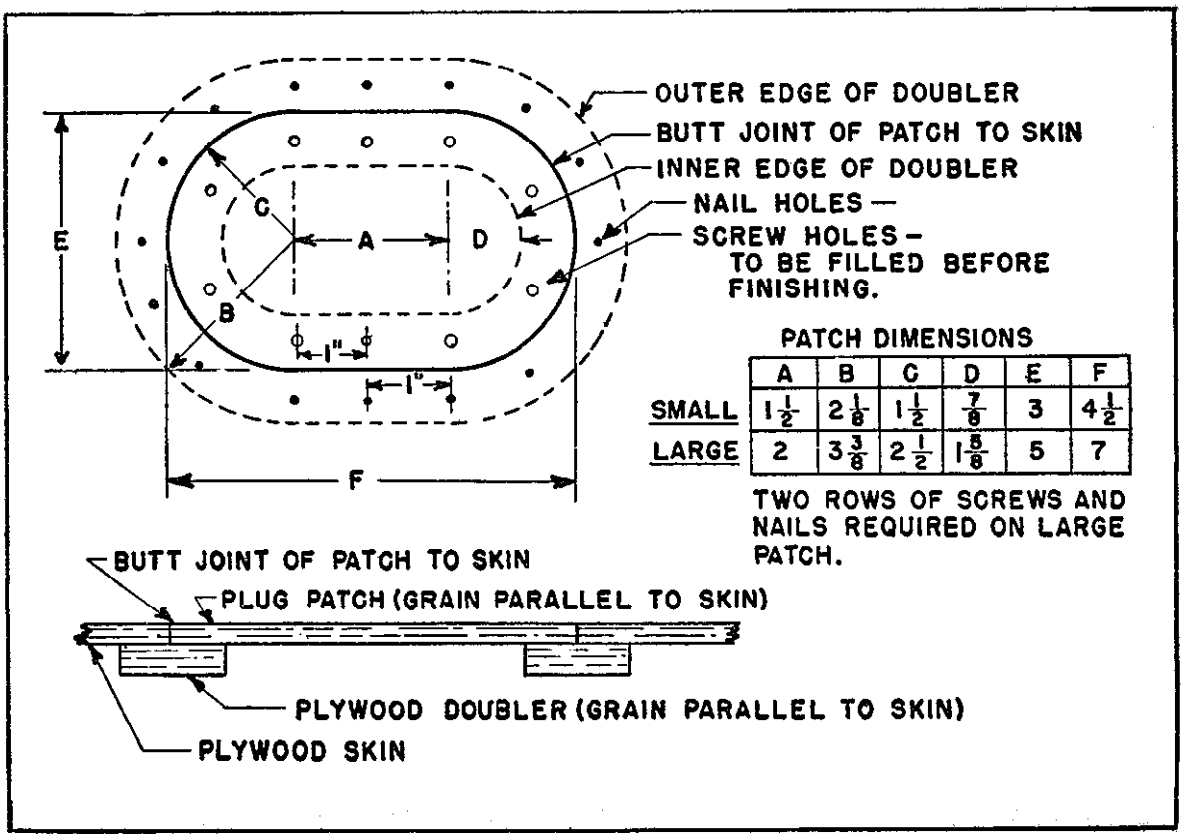

	A	B	C	D	E	F
SMALL	1 1/2	2 1/8	1 1/2	7/8	3	4 1/2
LARGE	2	3 3/8	2 1/2	1 5/8	5	7

FIGURE 2–12. Oval Plug Patch Assembly.

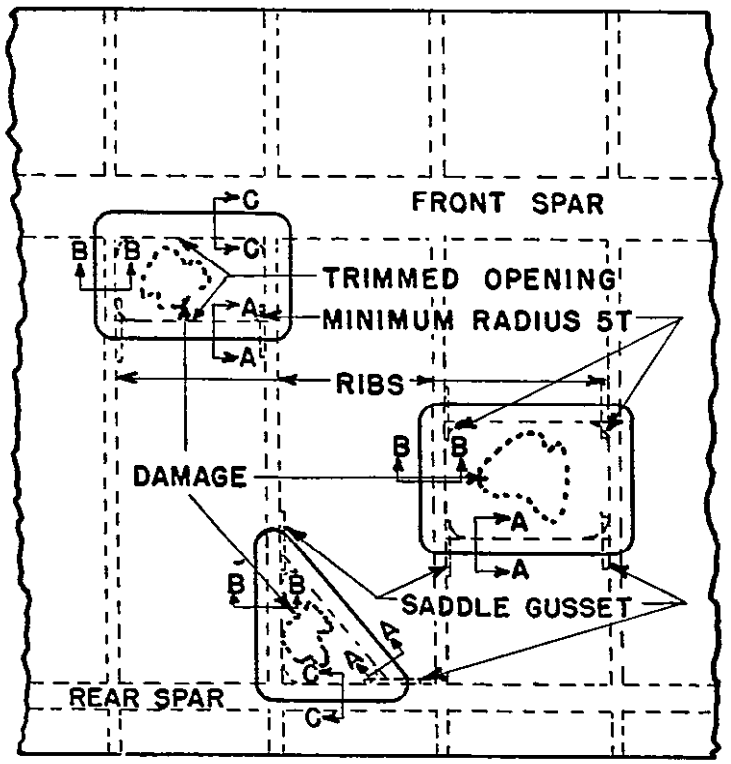

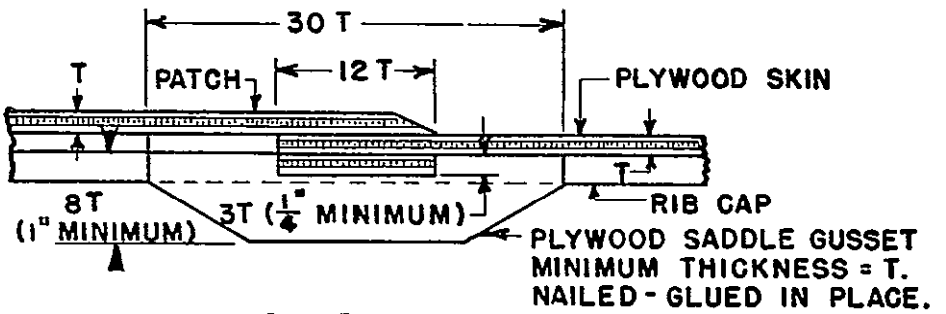

SECTION A - A

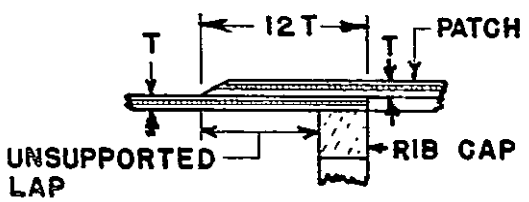

SECTION B - B

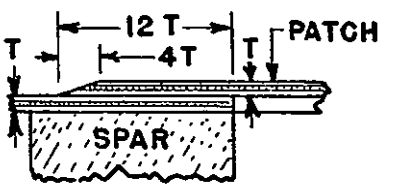

SECTION C - C

FIGURE 2-13. Surface Patches.

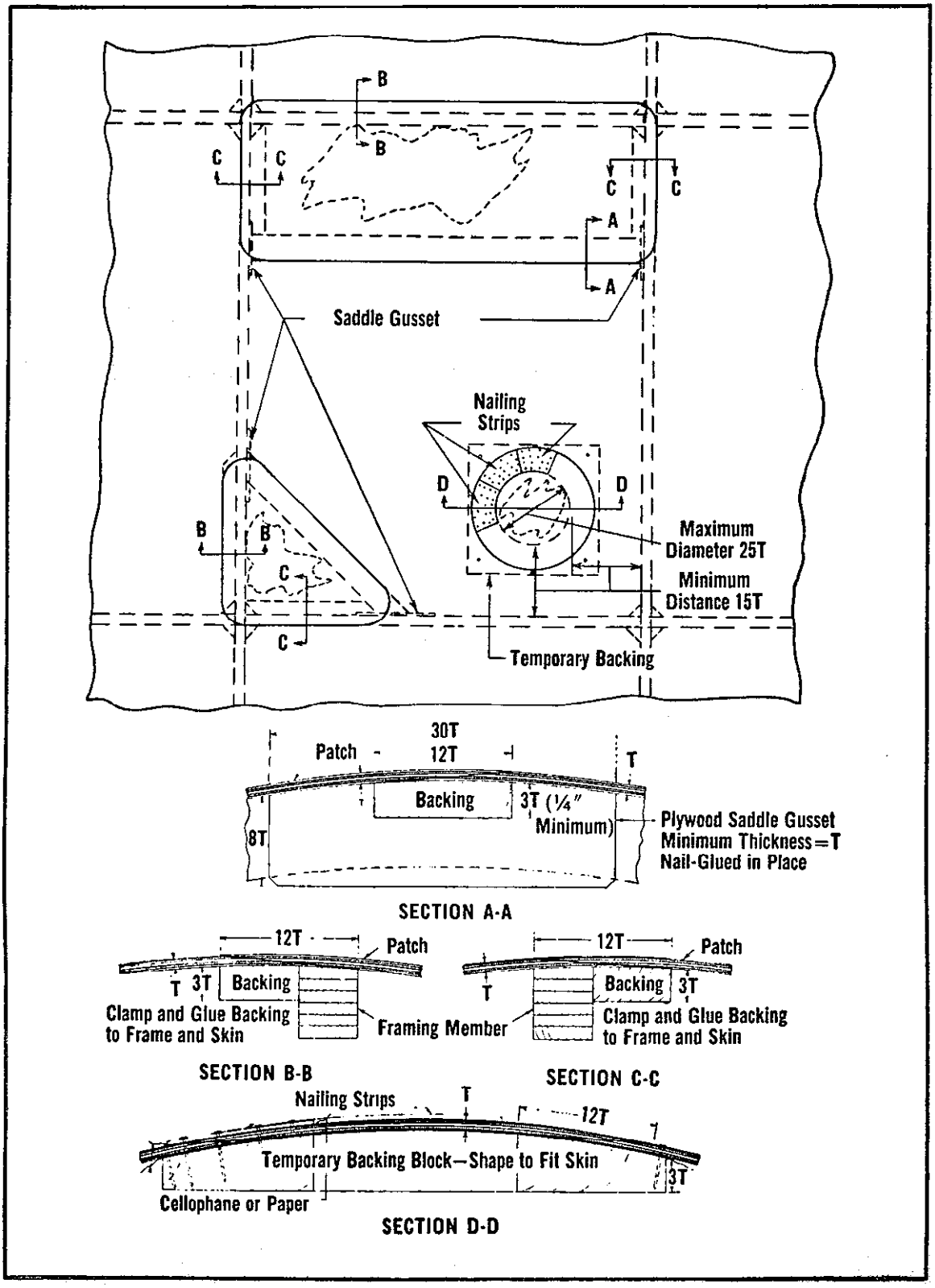

FIGURE 2–14. Scarf Patches—Back of Skin Accessible.

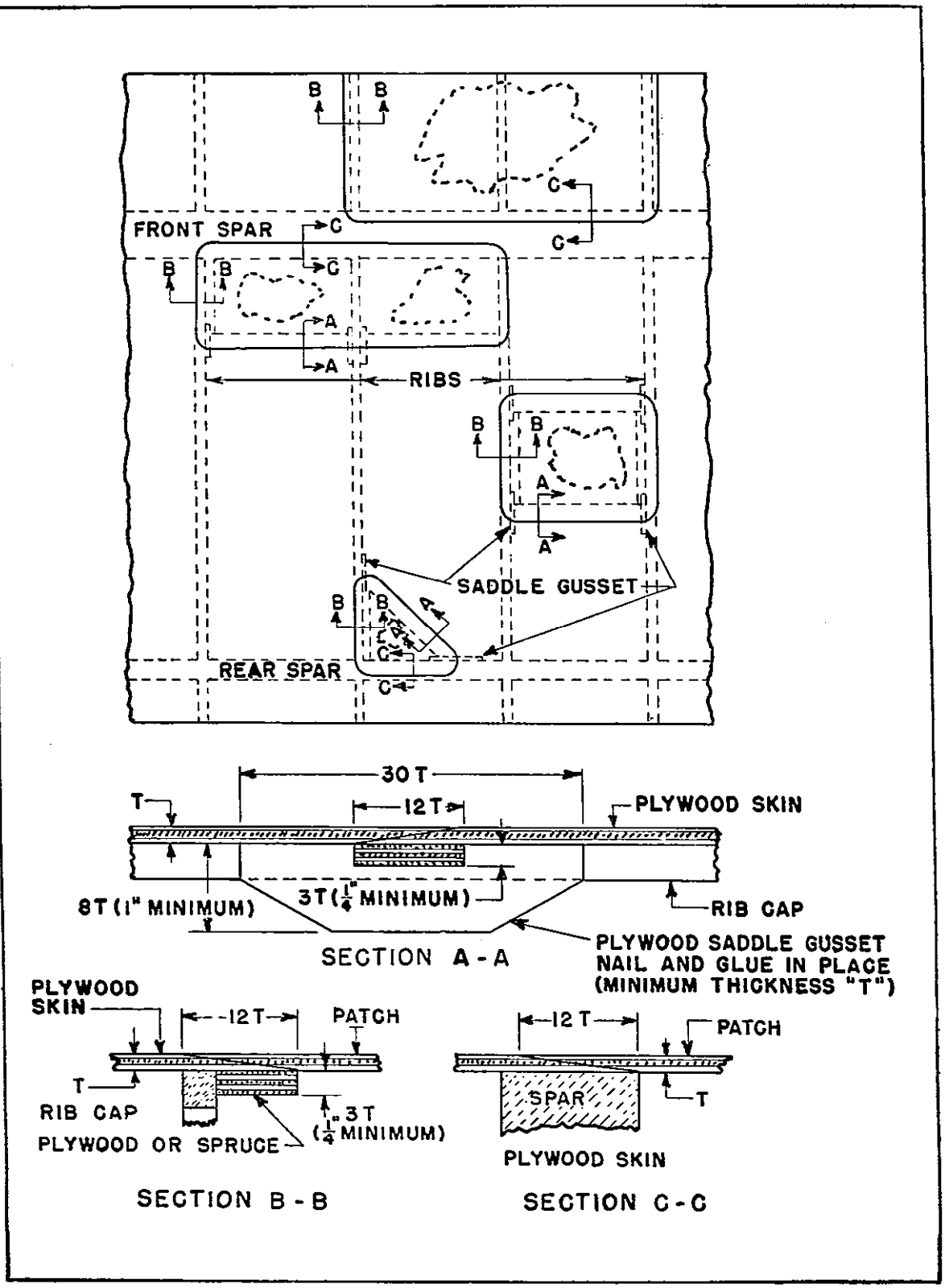

FIGURE 2-15. Scarf Patches—Back of Skin Not Accessible.

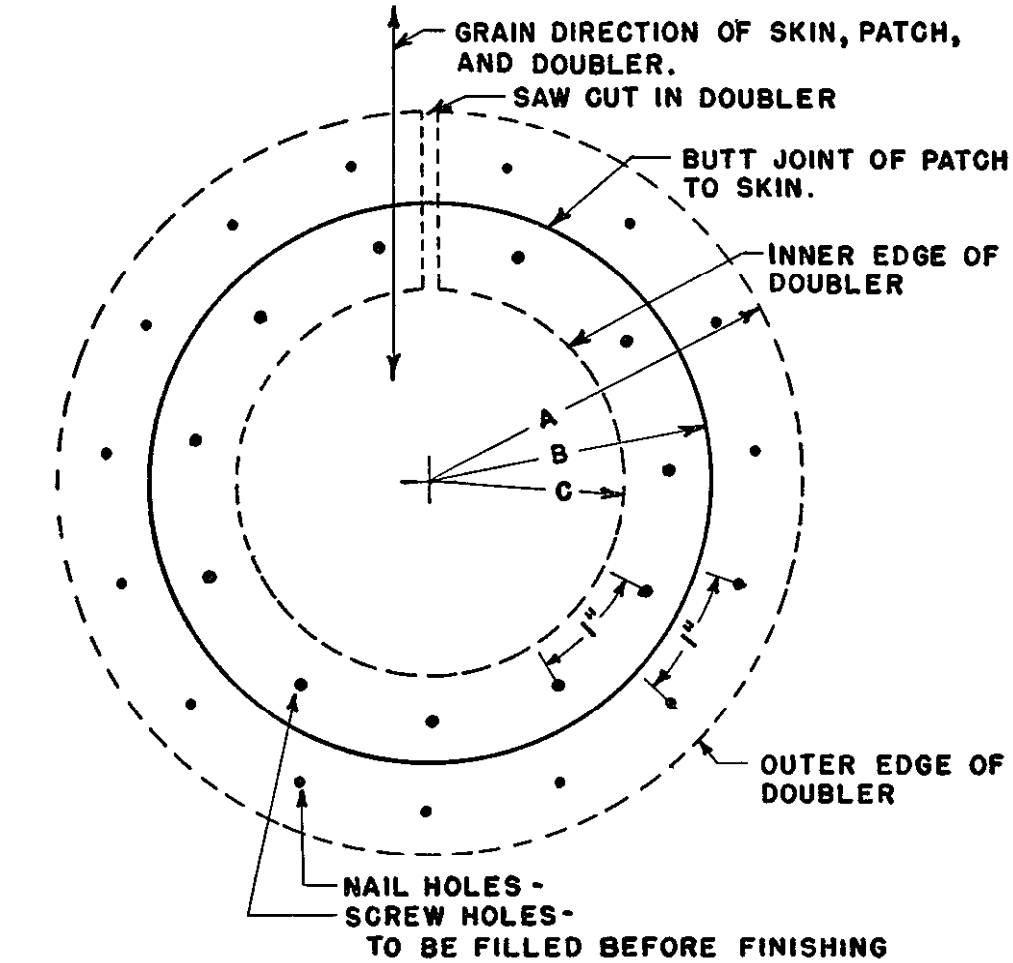

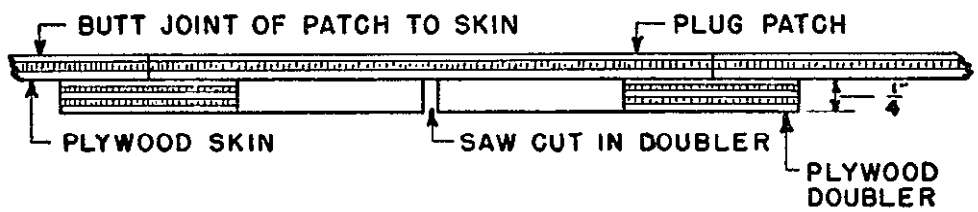

DIMENSIONS

	A	B	C
SMALL CIRCULAR PLUG PATCH	$2\frac{5}{8}$	2	$1\frac{3}{8}$
LARGE CIRCULAR PLUG PATCH	$3\frac{7}{8}$	3	$2\frac{1}{8}$

(TWO ROWS OF SCREWS AND NAILS REQUIRED FOR LARGE PATCH.)

FIGURE 2-16. Round Plug-Patch Assembly.

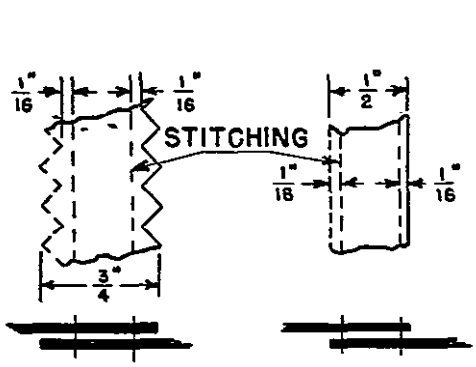

(D) PLAIN OVERLAP SEAM

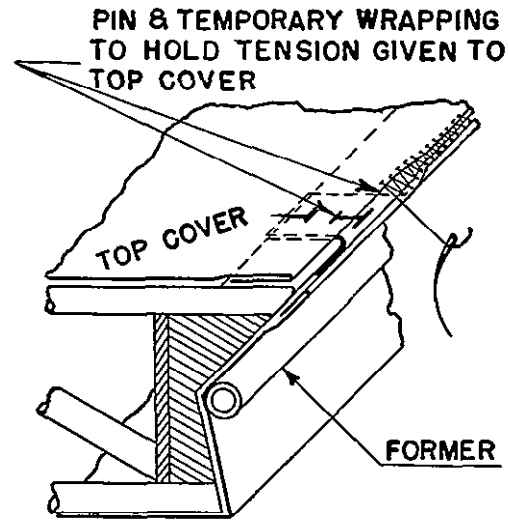

(A) ATTACHING FABRIC AT AILERON CUT-OUT.

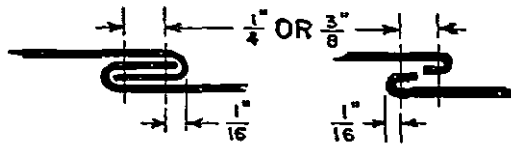

(E) FRENCH FELL SEAM (F) FOLDED FELL SEAM

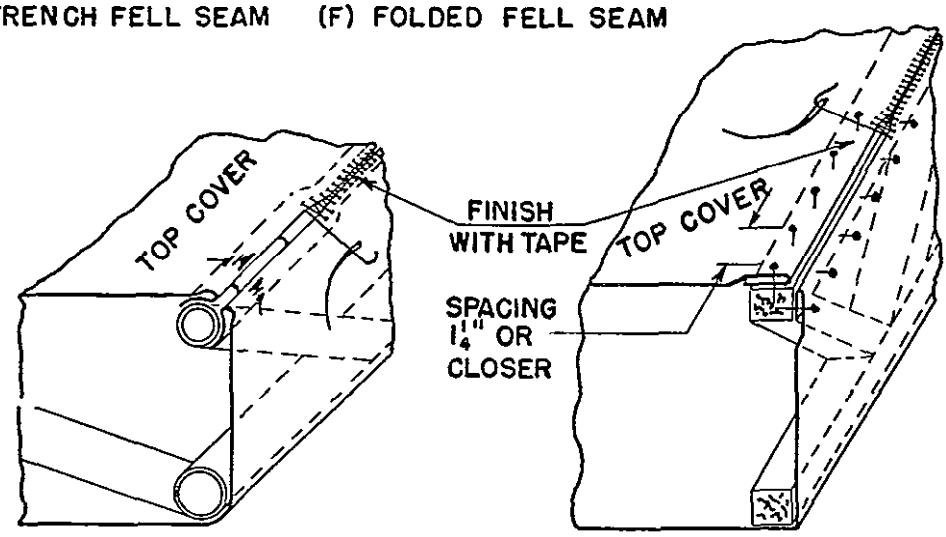

(B) ATTACHING FABRIC AT METAL WING BUTT.

(C) ATTACHING FABRIC AT WOODEN WING BUTT

TACKS SHOULD BE STAINLESS STEEL, TINNED IRON OR BRASS, NO. 18 B. W. G.

FIGURE 3-1. Typical Methods of Attaching Fabric.

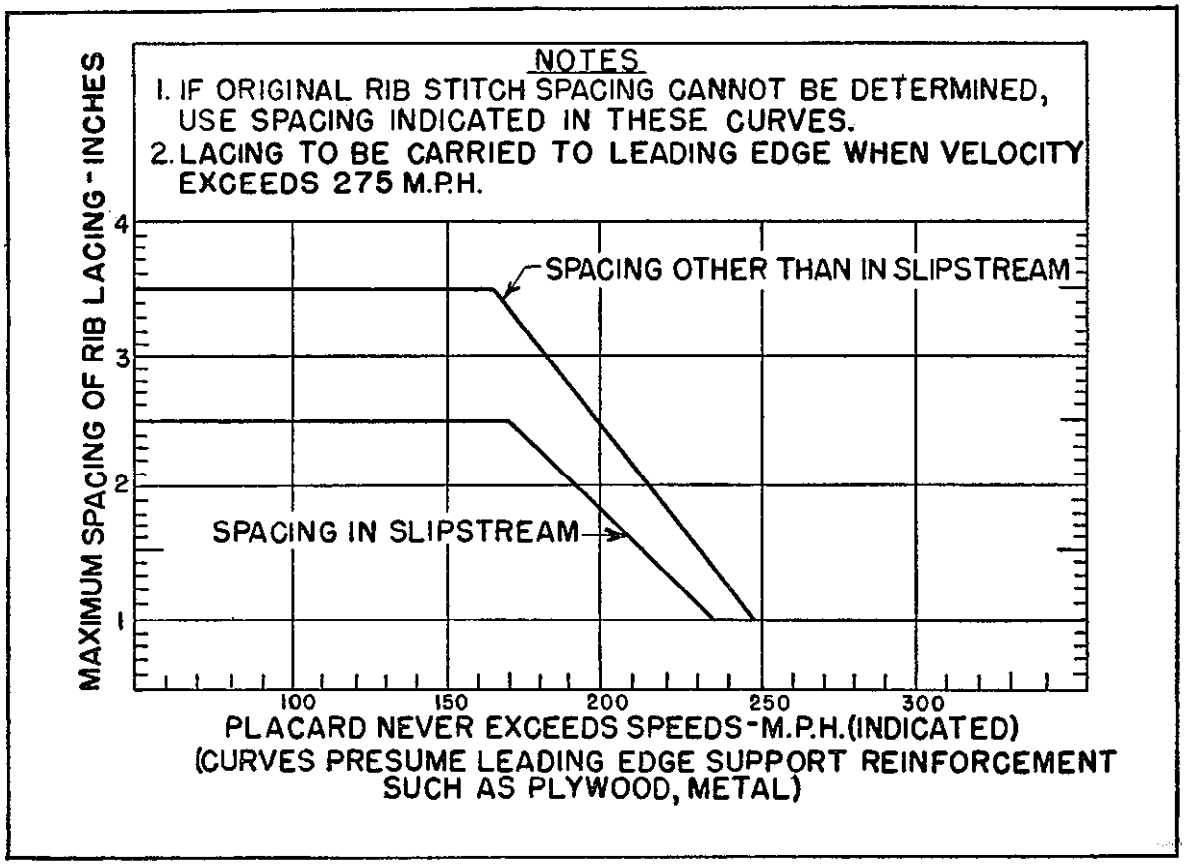

FIGURE 3-2. Fabric Attachment Spacing.

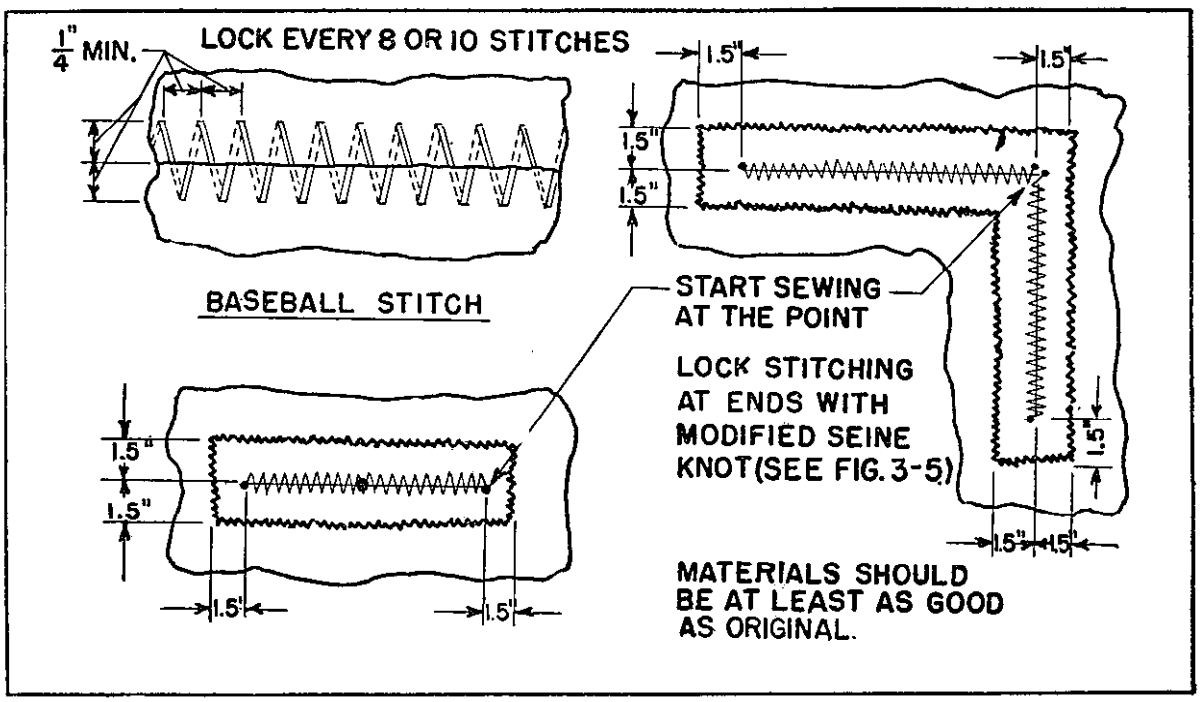

FIGURE 3-3 Repair of Tears in Fabric.

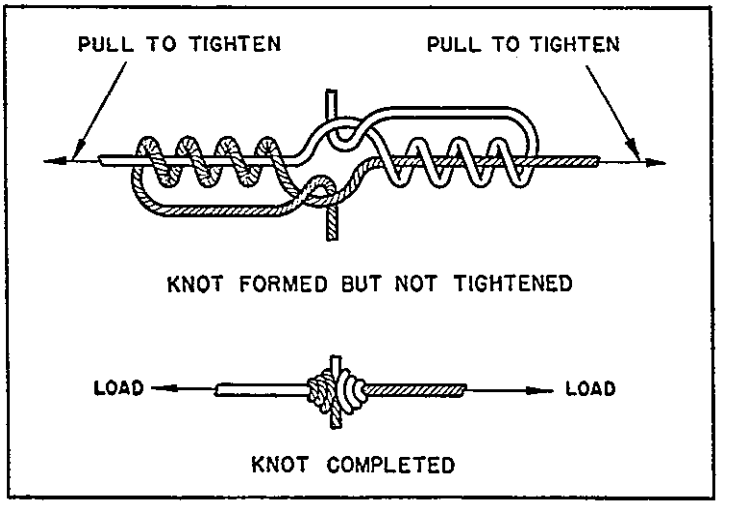

FIGURE 3-4. Splice Knot.

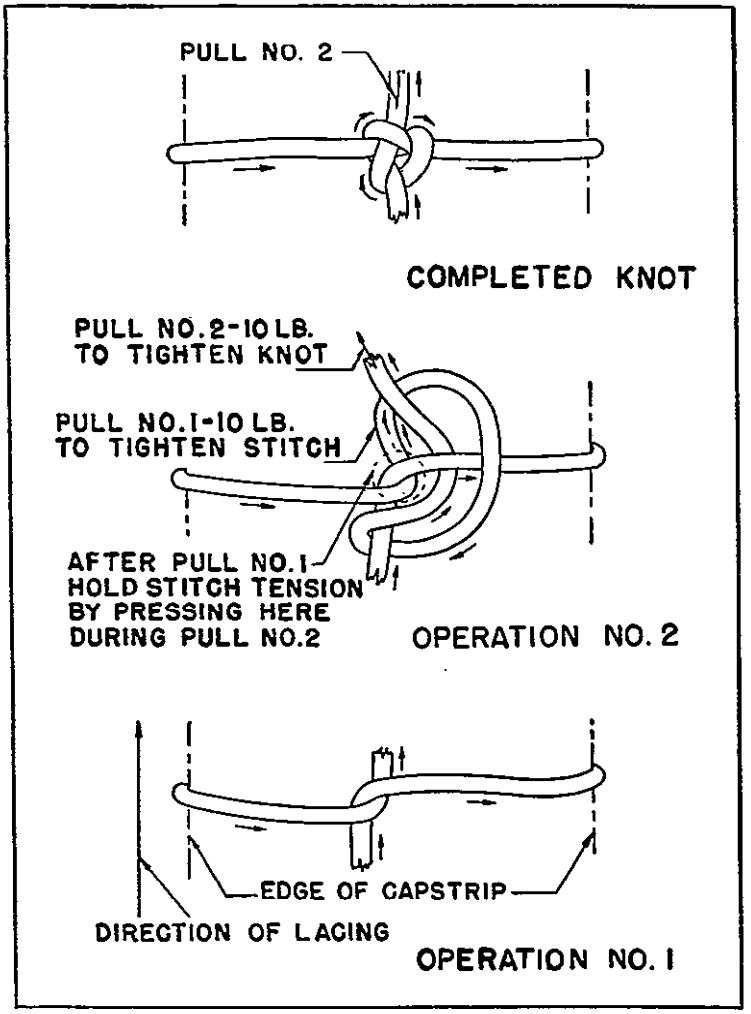

FIGURE 3-5. Standard Knot for Rib Lacing (Modified Seine Knot).

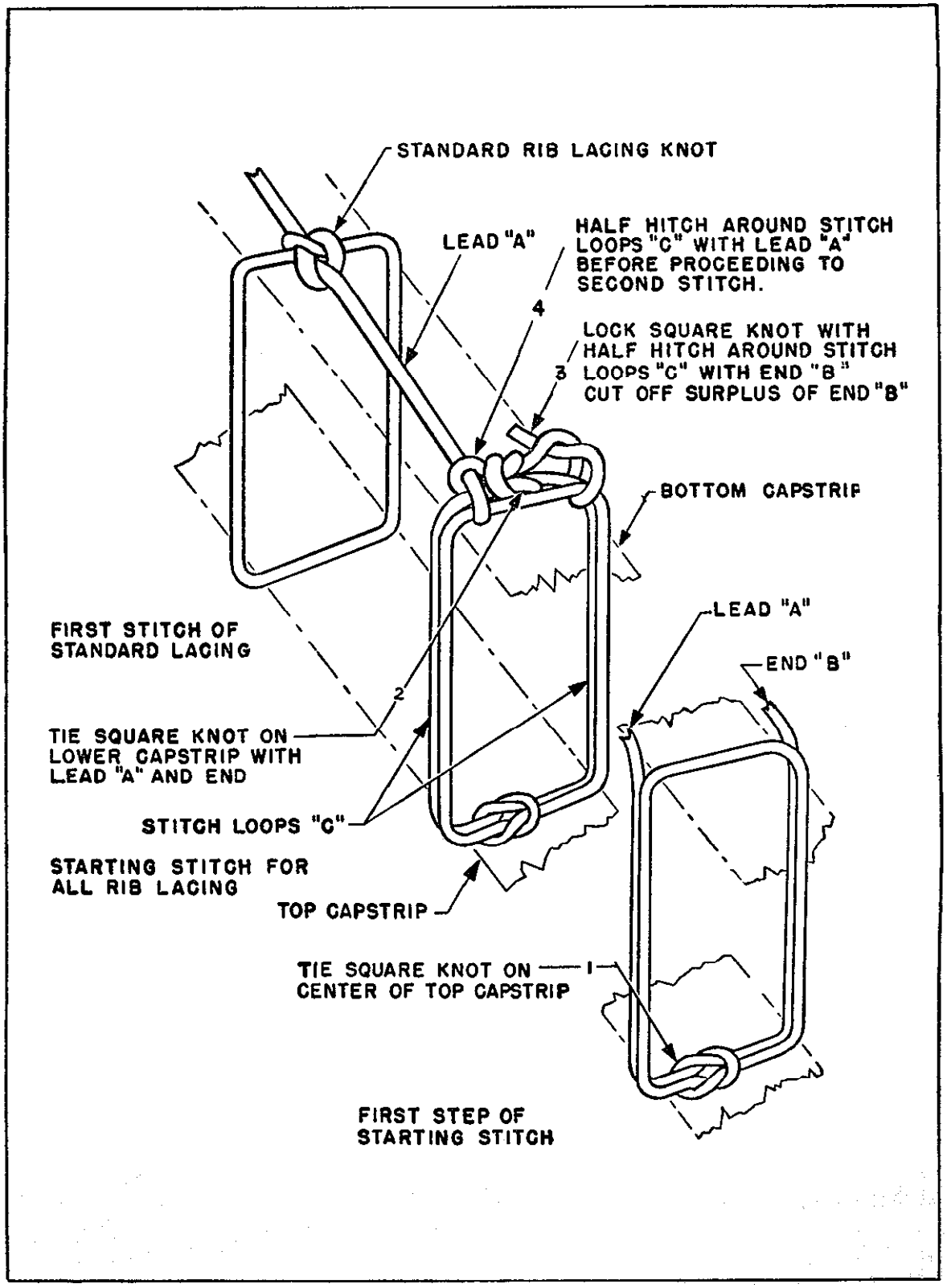

FIGURE 3-6. Starting Stitch for Rib Stitching.

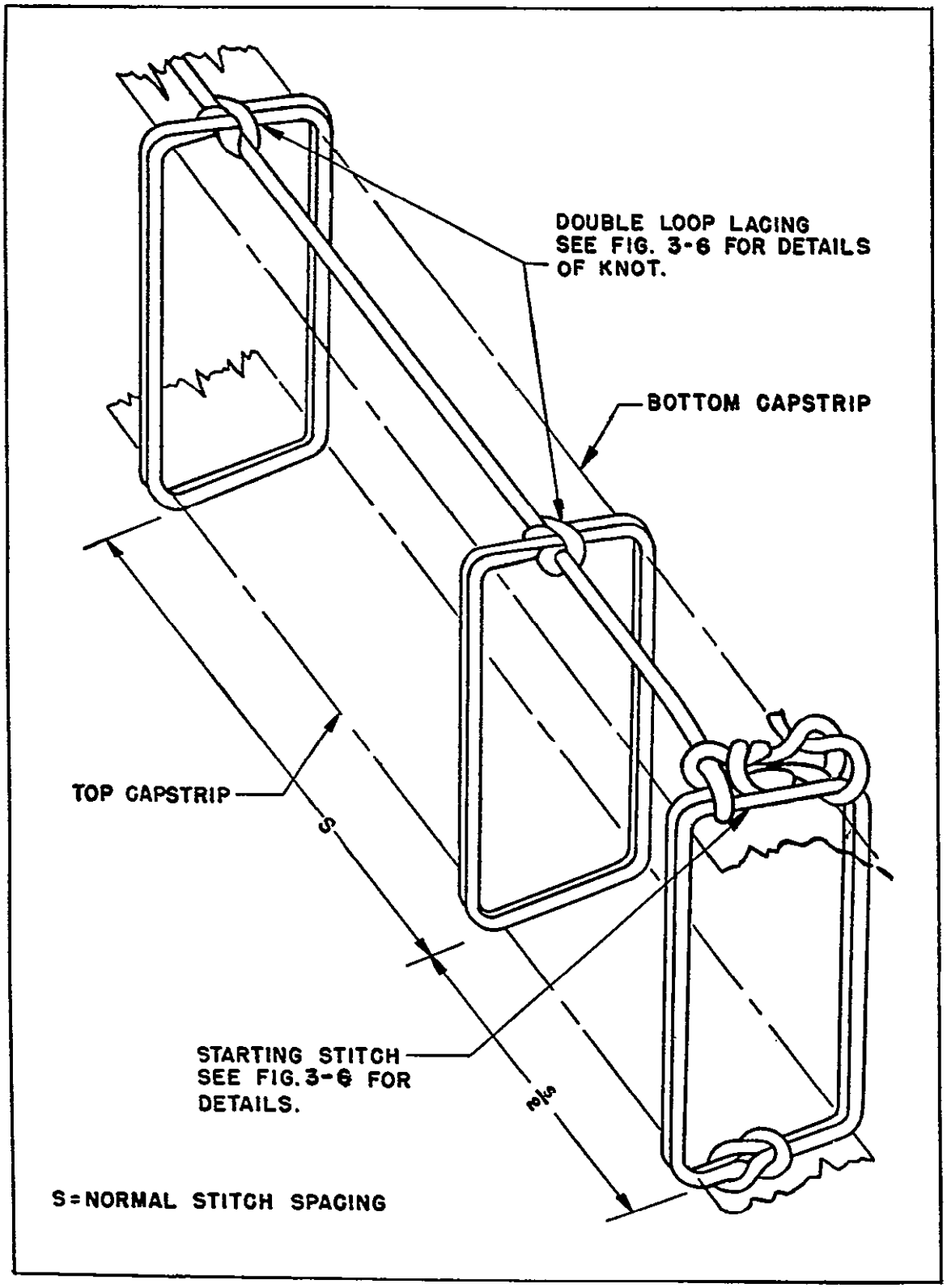

FIGURE 3-7. Standard Double Loop Lacing.

Appendix C
Figures

Figures to which reference has been made throughout Civil Aeronautics Manual 18 appear in appendix C. The numbering system used in relation to tables, as explained in appendix B, applies to the figures in this appendix. For example, figure 2–1 is the first figure within section 2 of 18.30.

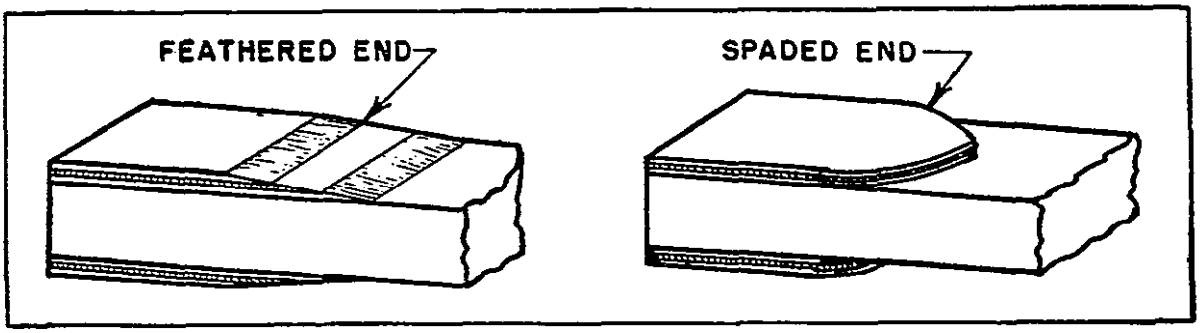

FIGURE 2-1. Tapering of Face Plates.

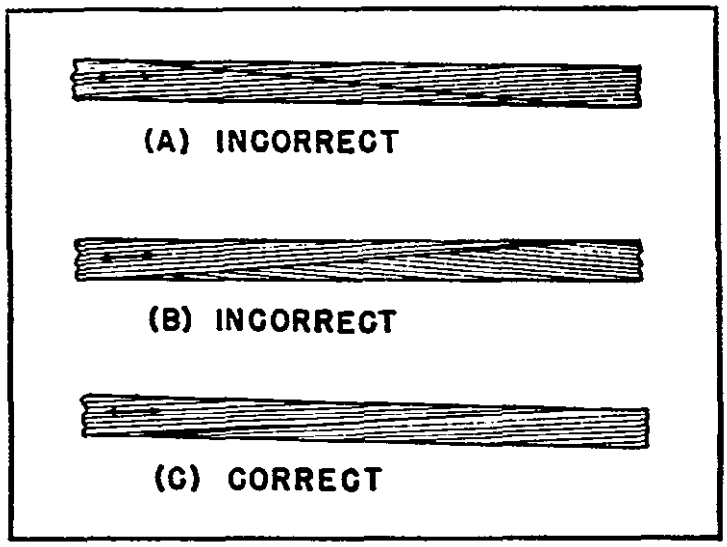

FIGURE 2-2. Consideration of Grain Direction When Making Scarf Joints.

No grain deviation steeper than 1 in 15 should be present in an outer eighth of the depth of the spar. In an adjacent eighth deviations involving steeper slopes, such as a wave in a few growth layers, are unlikely to be harmful. Local grain slope deviations in excess of those specified may be permitted in spar flanges only in the inner one-fourth of the flange depth.

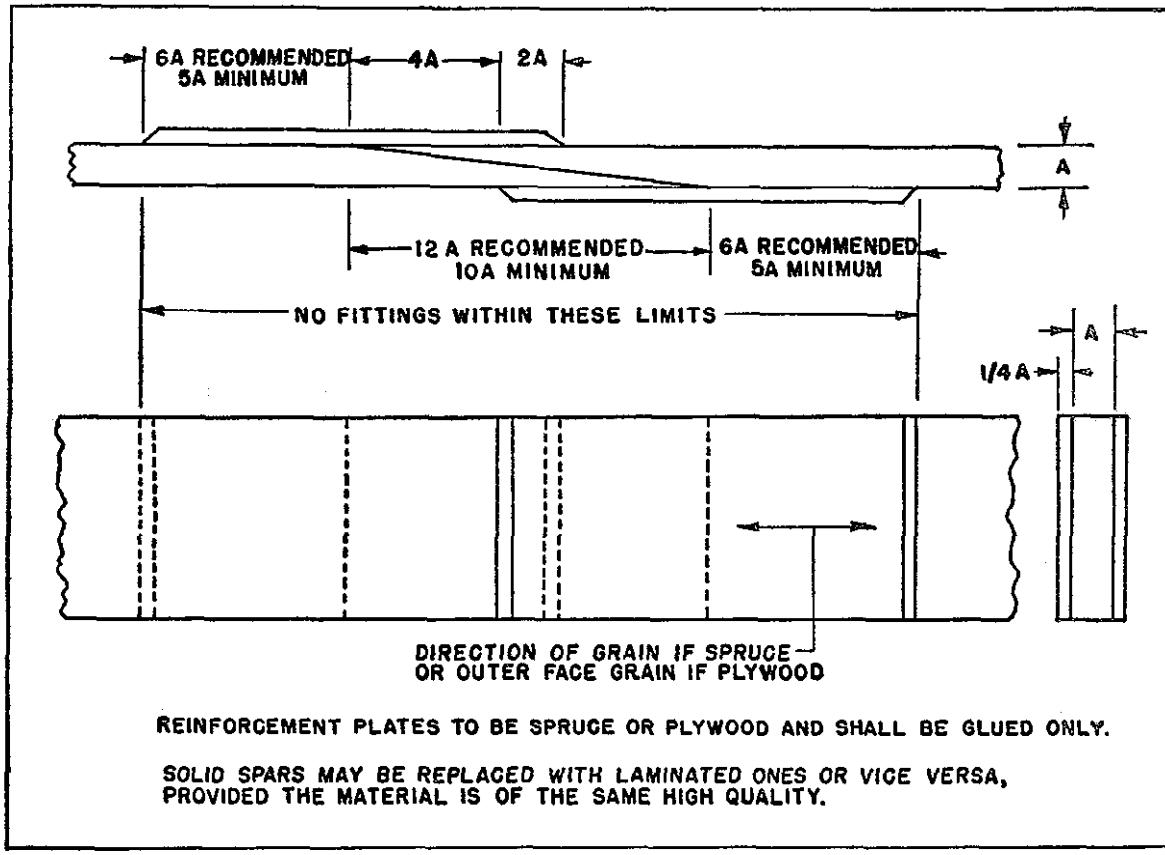

FIGURE 2-3. Method of Splicing Solid or Laminated Rectangular Spars.

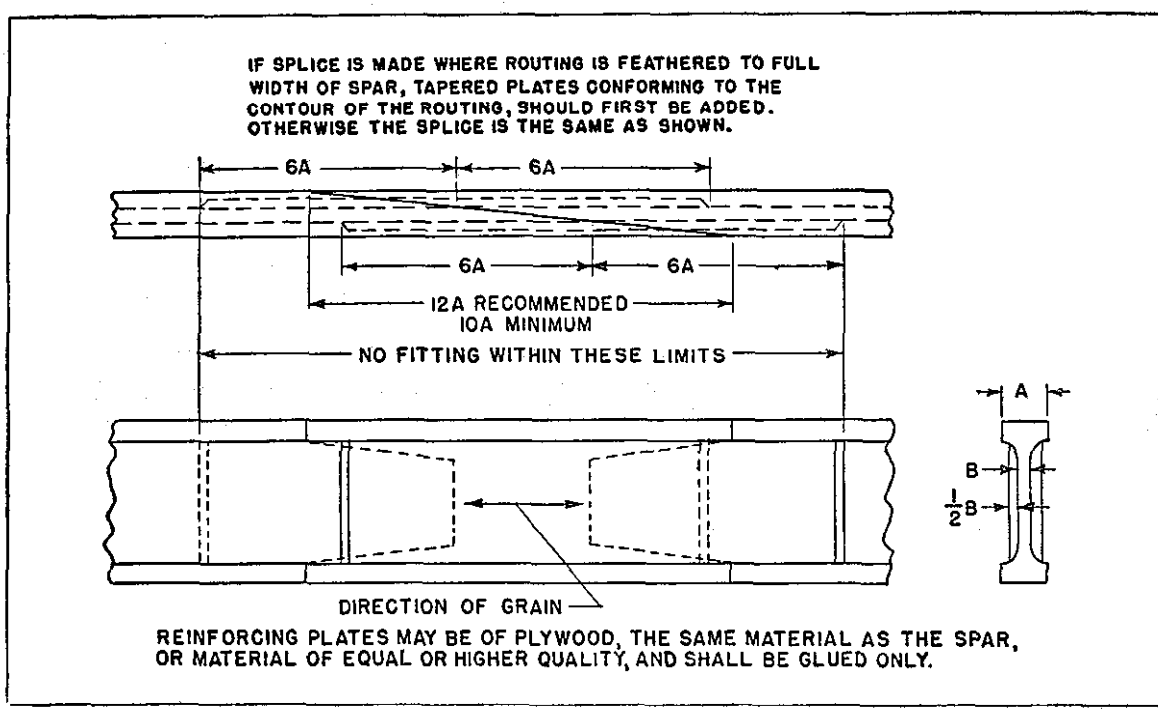

FIGURE 2-4. Method of Splicing Solid "I" Spars.

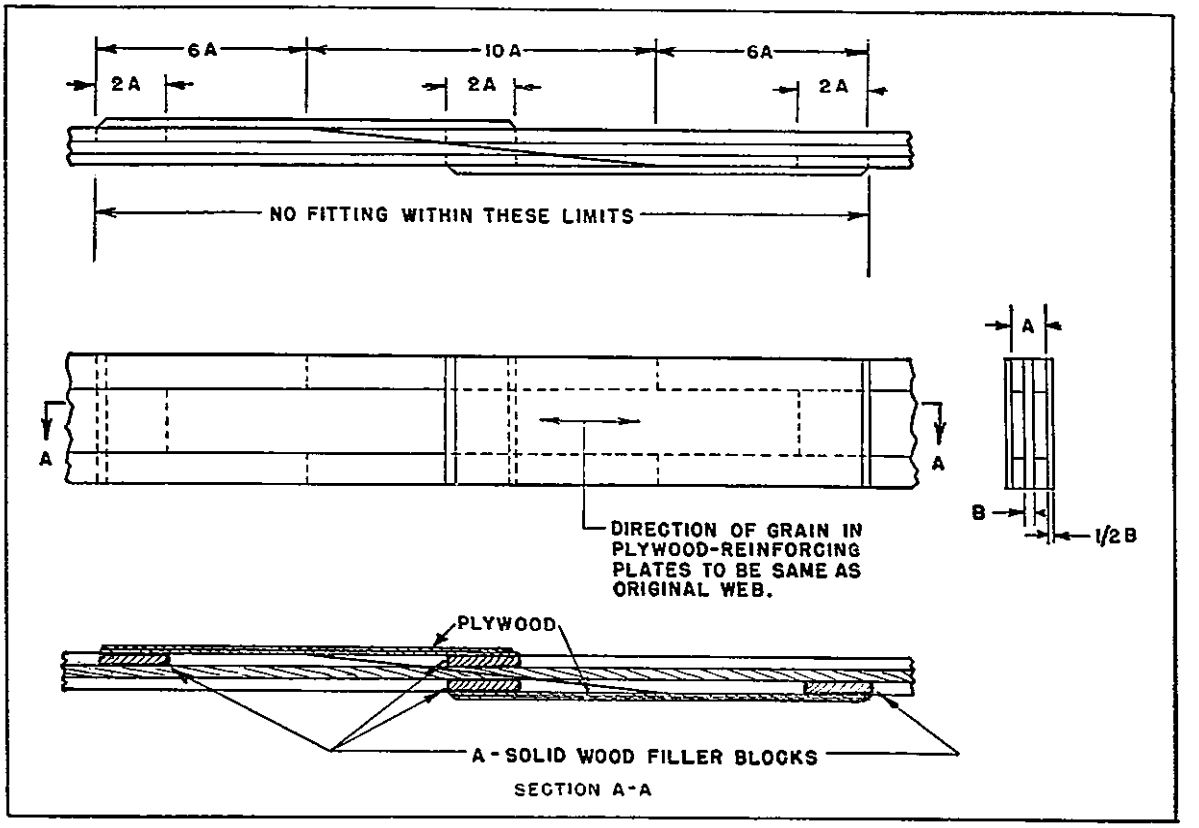

FIGURE 2-5. Repairs to Built-Up "I" Spar.

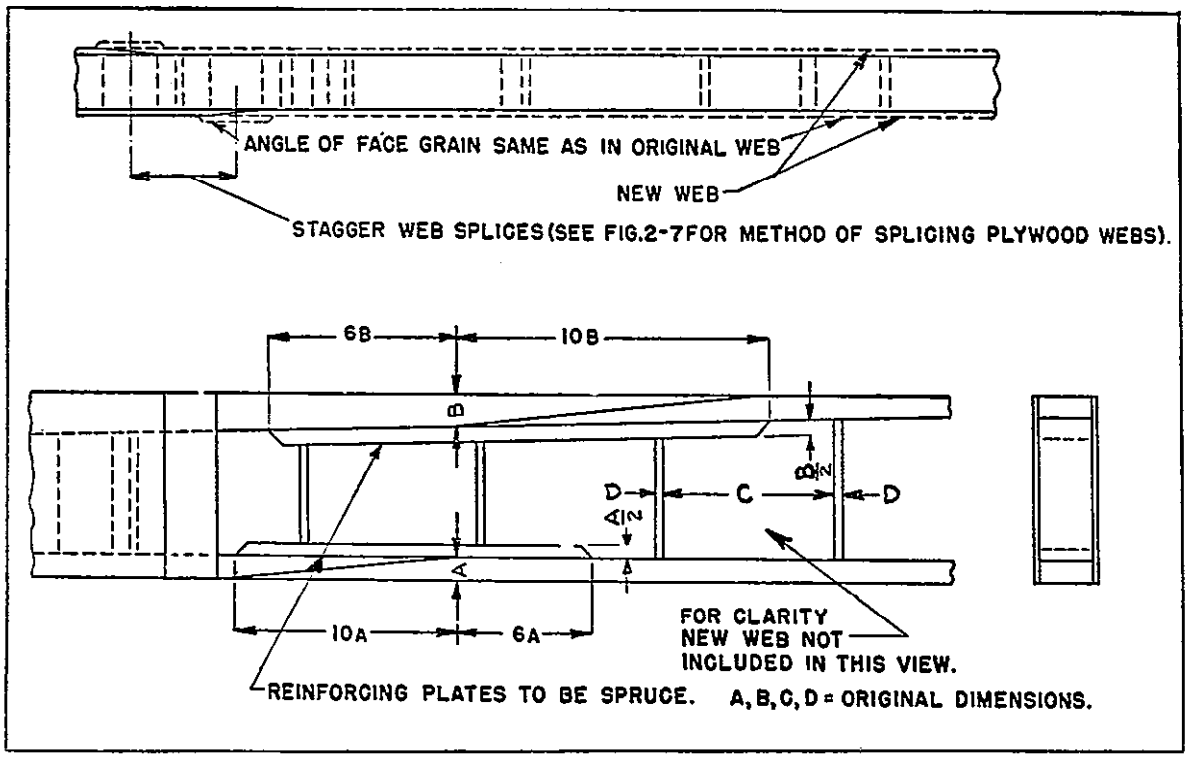

FIGURE 2-6. Method of Splicing Box-Spar Flanges (Plate Method).

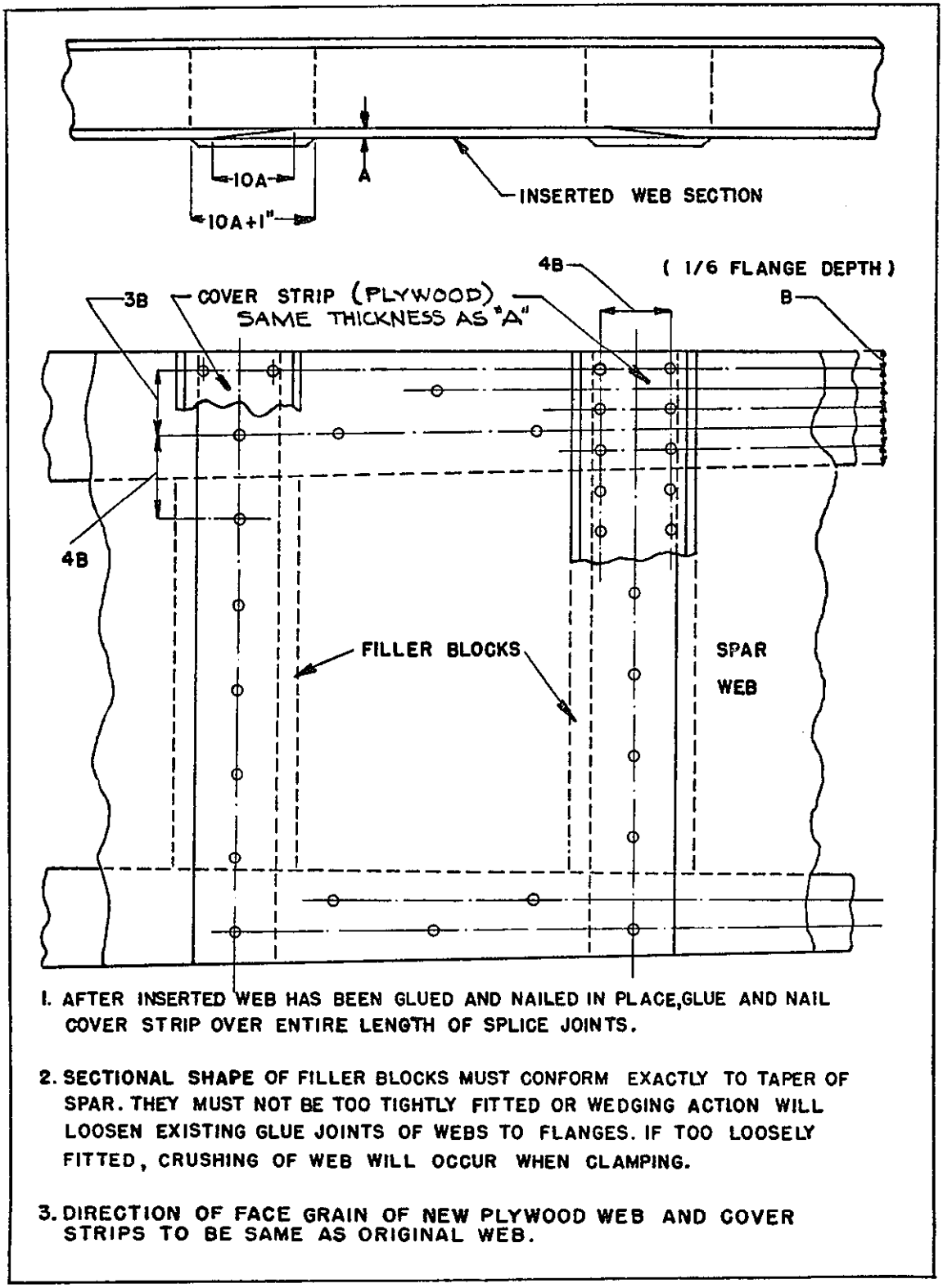

1. AFTER INSERTED WEB HAS BEEN GLUED AND NAILED IN PLACE, GLUE AND NAIL COVER STRIP OVER ENTIRE LENGTH OF SPLICE JOINTS.

2. SECTIONAL SHAPE OF FILLER BLOCKS MUST CONFORM EXACTLY TO TAPER OF SPAR. THEY MUST NOT BE TOO TIGHTLY FITTED OR WEDGING ACTION WILL LOOSEN EXISTING GLUE JOINTS OF WEBS TO FLANGES. IF TOO LOOSELY FITTED, CRUSHING OF WEB WILL OCCUR WHEN CLAMPING.

3. DIRECTION OF FACE GRAIN OF NEW PLYWOOD WEB AND COVER STRIPS TO BE SAME AS ORIGINAL WEB.

FIGURE 2-7. Method of Splicing Box-Spar Webs.

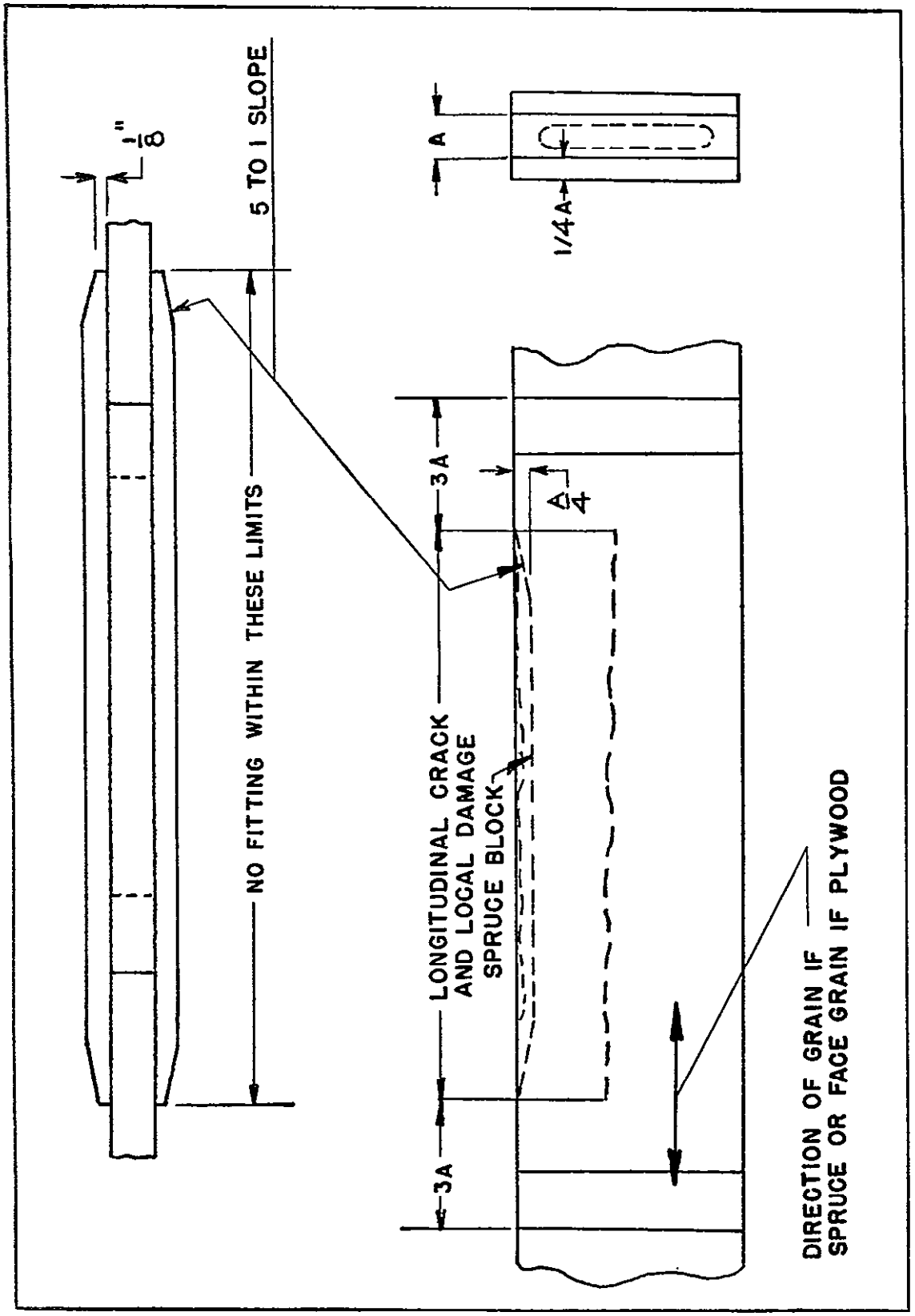

FIGURE 2-8. Method of Reinforcing a Longitudinal Crack and/or Local Damage in a Solid or Internally Routed Spar.

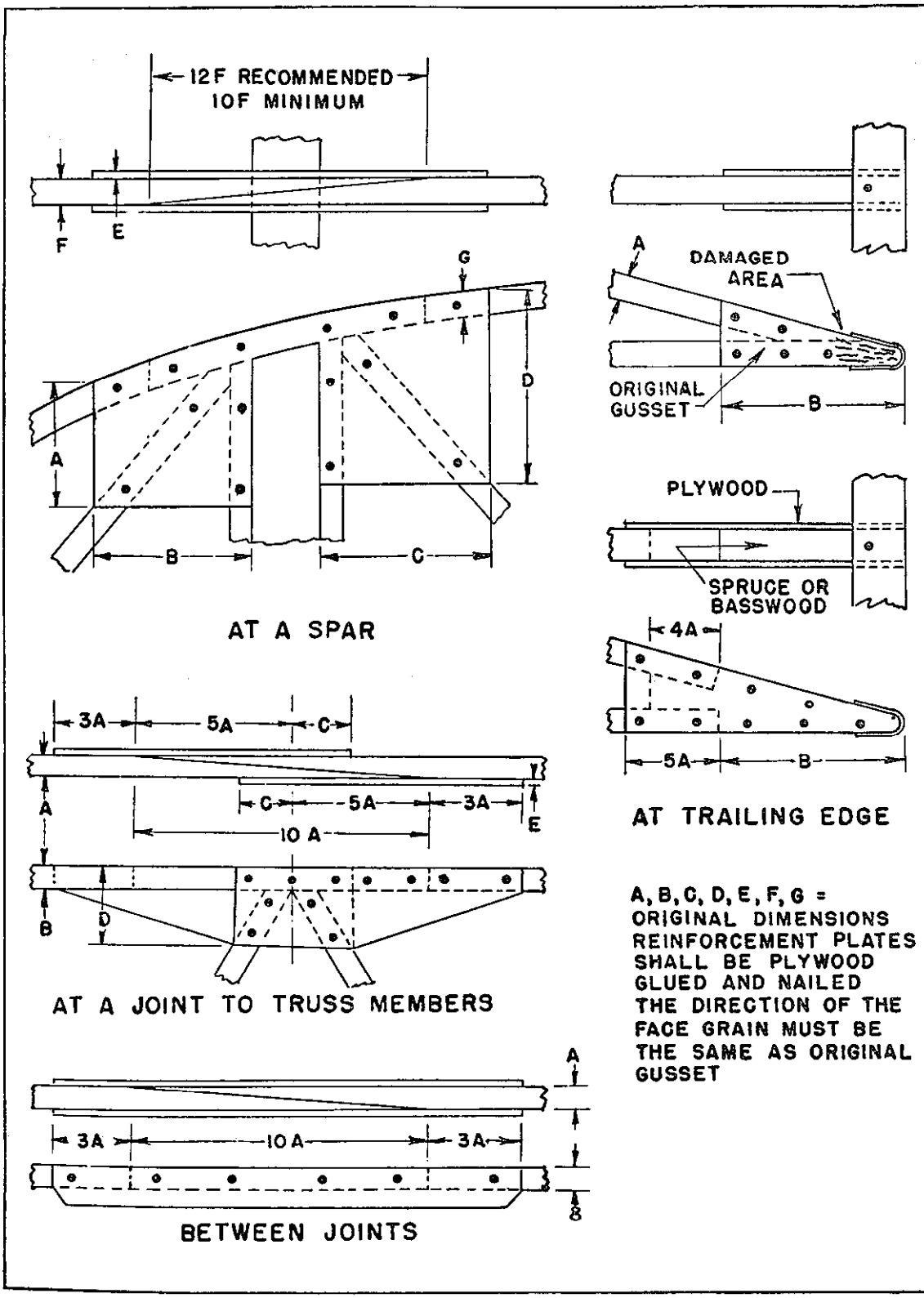

FIGURE 2-9. Repair of Wood Ribs.

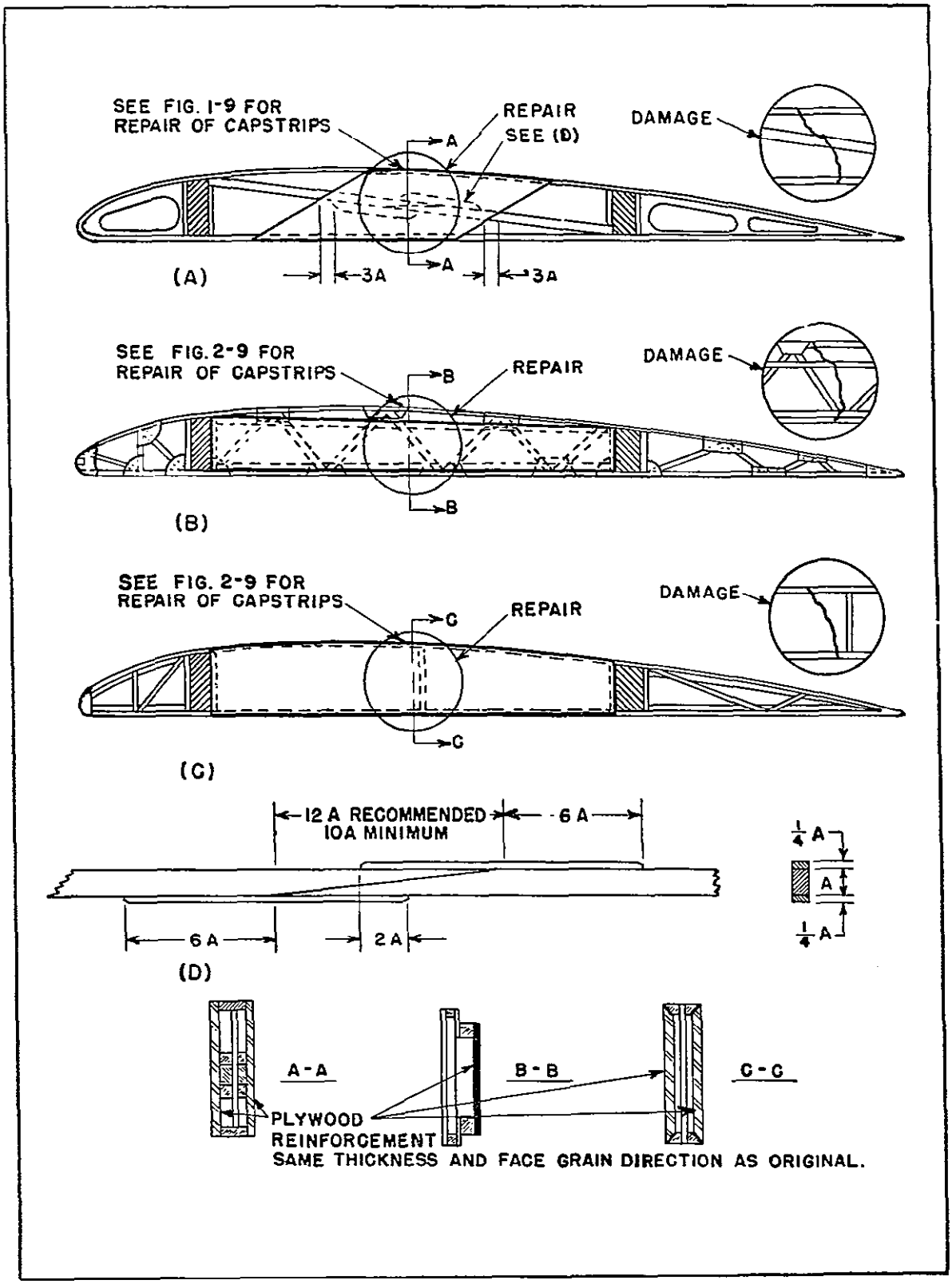

FIGURE 2-10. Typical Wing Compression Rib Repairs.

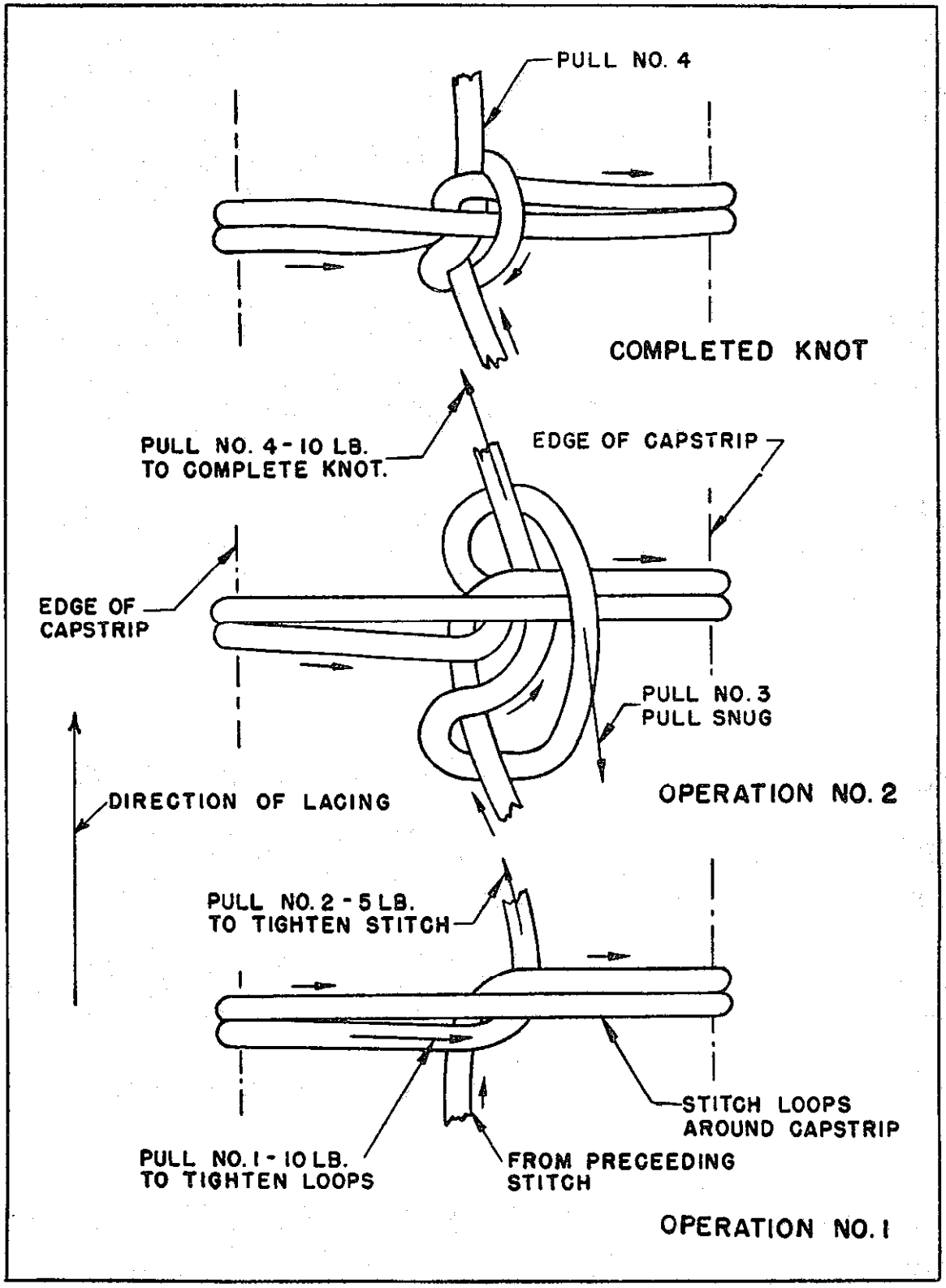

FIGURE 3-8. Standard Knot for Double Loop Lacing.

414269 O - 57 - 12

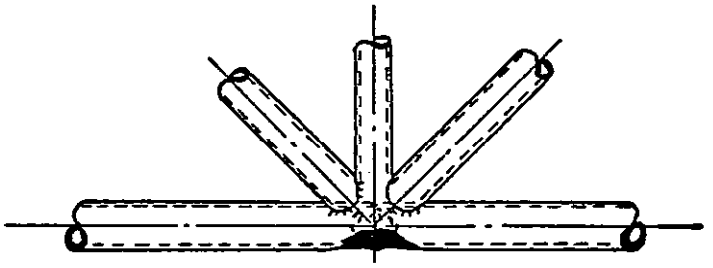

LONGERON DENTED AT A STATION

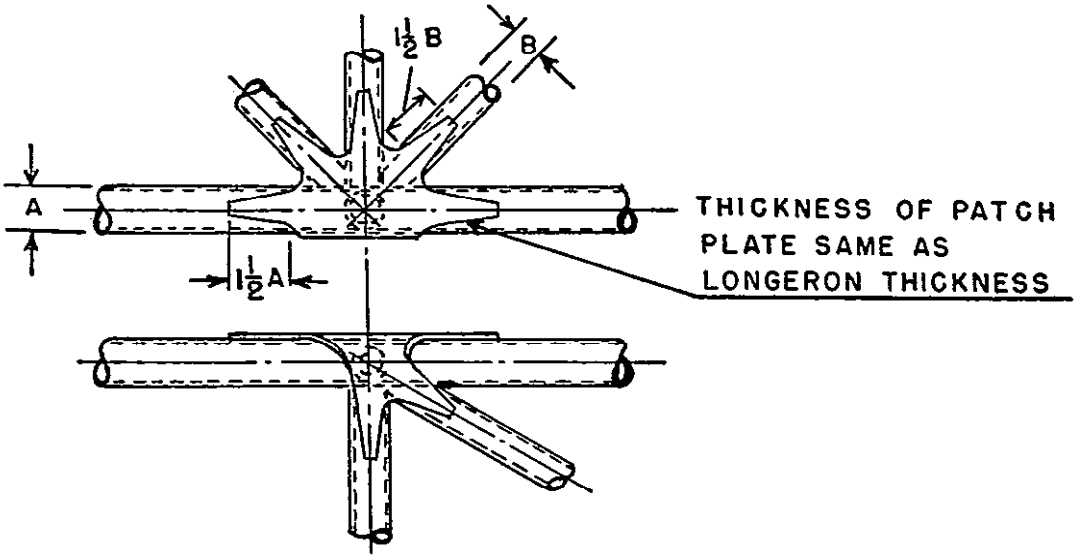

PATCH PLATE BEFORE FORMING AND WELDING

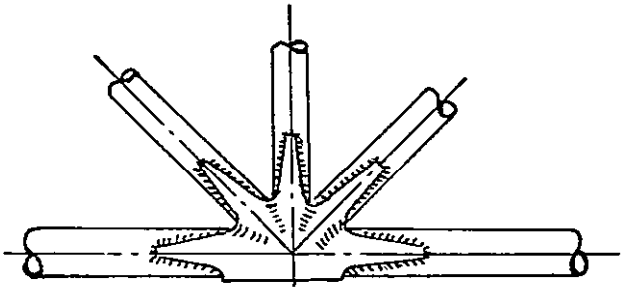

PATCH PLATE FORMED AND WELDED TO TUBES

FIGURE 4–1. Members Dented at a Cluster

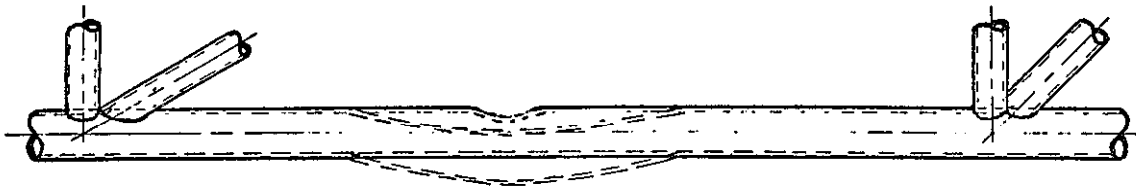

DENTED OR BENT TUBE.

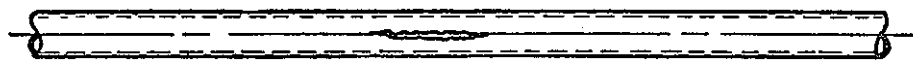

CRACKED TUBE

NOTE:
LOCALLY DENTED OR BENT MEMBERS SHOULD FIRST BE REFORMED IN CLAMP.

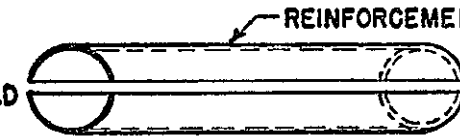

REINFORCEMENT SLEEVE TO BE OF SAME MATERIAL AND AT LEAST THE SAME GUAGE AS TUBE BEING REPAIRED.

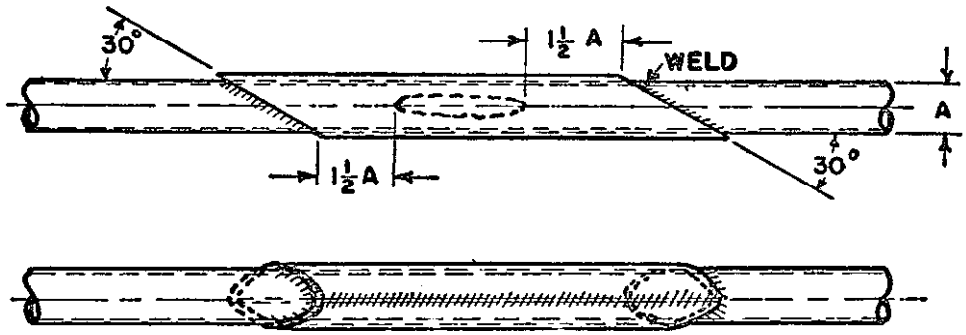

AS ALTERNATIVE TO SPLIT TUBE, A TWO PIECE REINFORCEMENT SLEEVE MAY BE FORMED FROM STEEL SHEET OF THE SAME MATERIAL AND AT LEAST THE SAME GUAGE AS THE DAMAGED TUBE. USE FISHMOUTH ENDS AND FOUR ROSETTE WELDS. AS SHOWN.

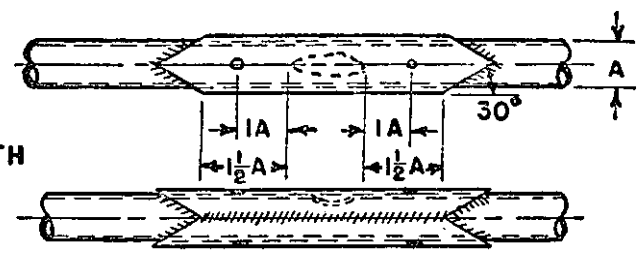

FIGURE 4–2. Members Dented in a Bay—Repair by Welded Sleeve.

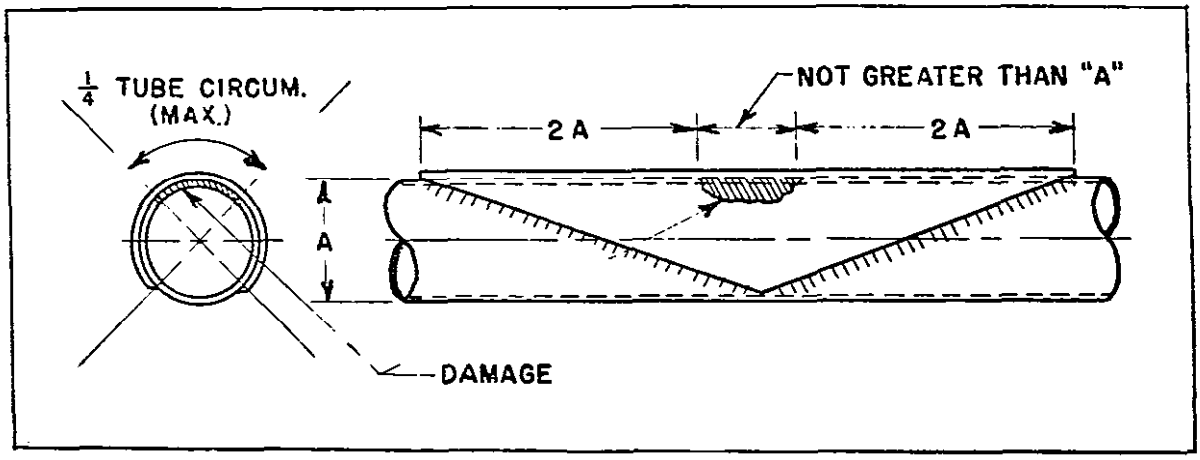

FIGURE 4–3. Welded Patch Repair.

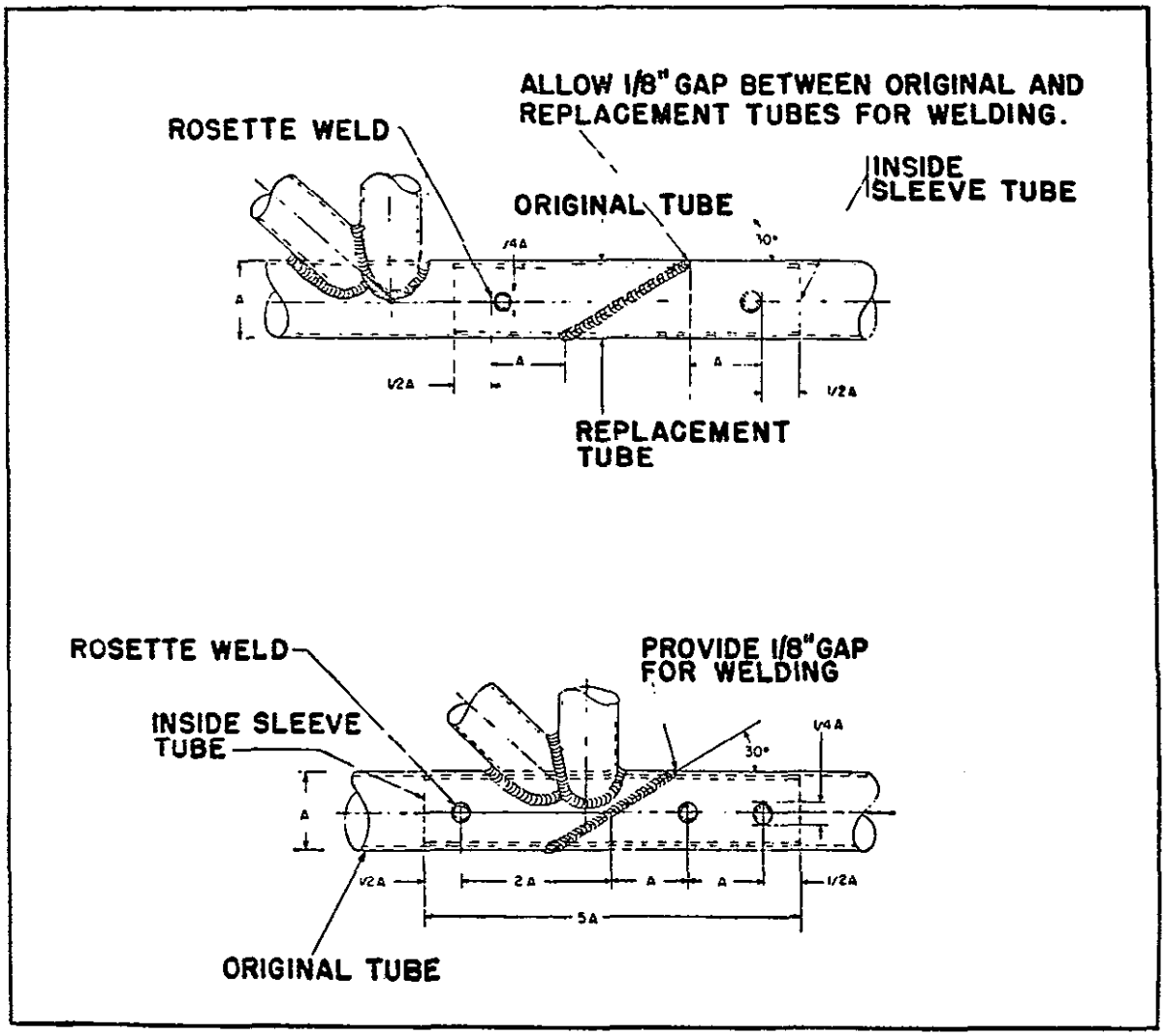

FIGURE 4–4. Splicing by Inner Sleeve Method.

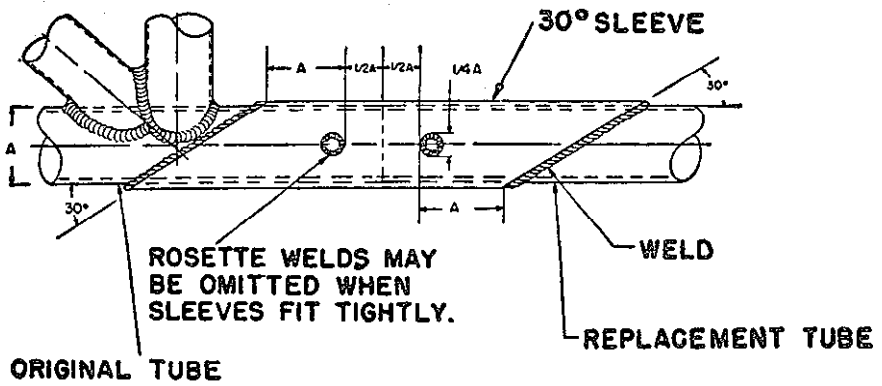

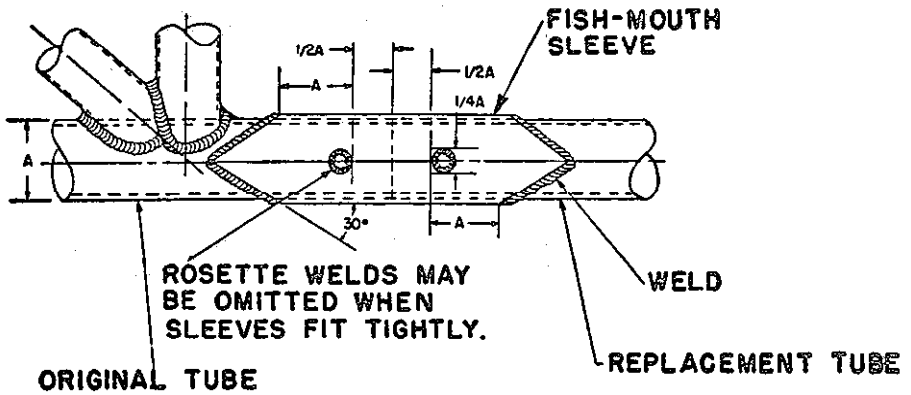

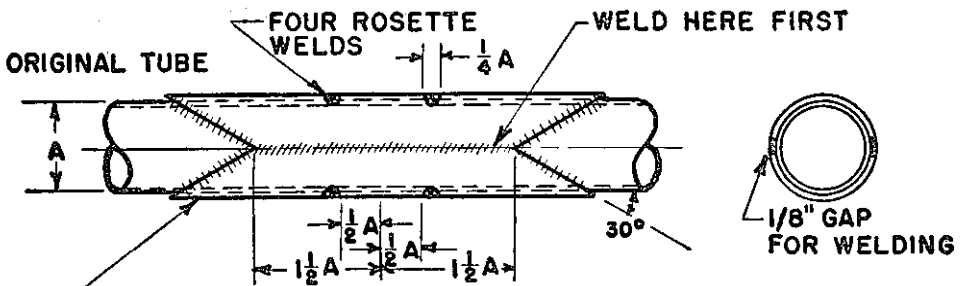

ALTERNATIVE SPLIT SLEEVE SPLICE
SPLIT SLEEVE MADE FROM STEEL TUBE OR SHEET WHEN OUTSIDE DIAMETER OF ORIGINAL TUBE IS LESS THAN 1". USE SHEET STEEL ONLY FOR ORIGINAL TUBES 1" O.D. AND OVER. USE SAME MATERIAL AND AT LEAST THE SAME GUAGE.

FIGURE 4–5. Splicing by Outer Sleeve Method—Replacement by Welded Outside Sleeve.

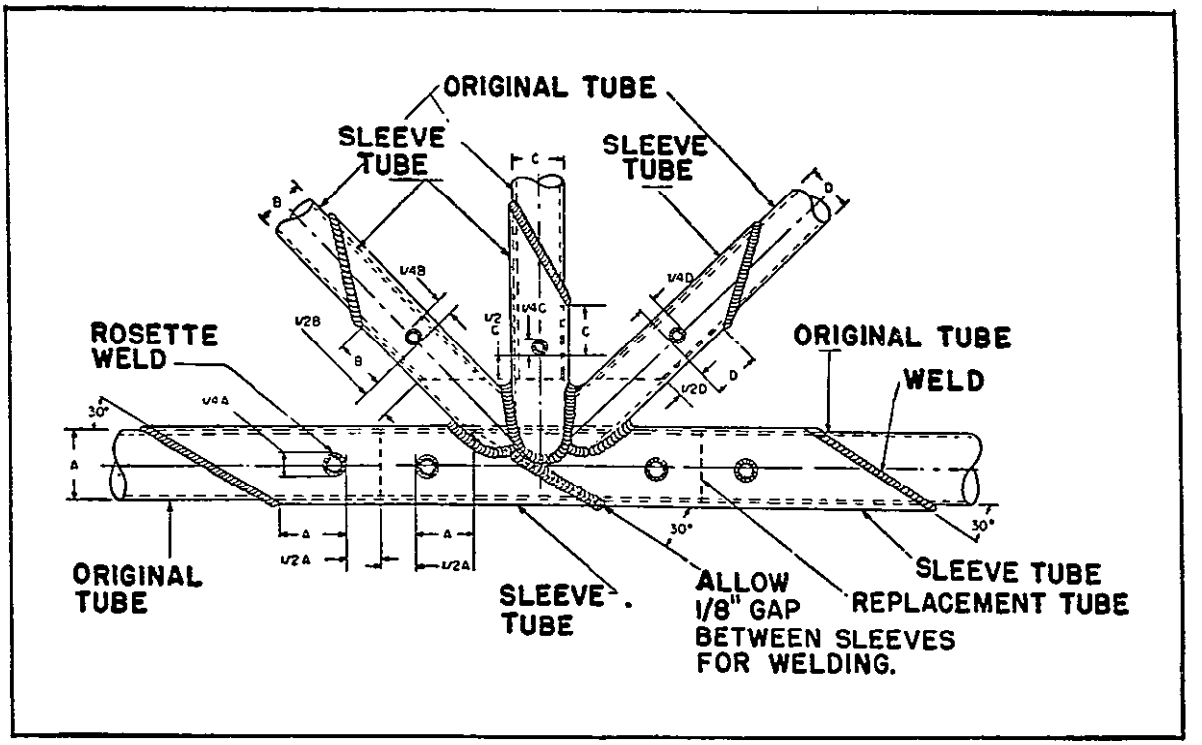

FIGURE 4–6. Tube Replacement at a Station by Welded Outer Sleeves.

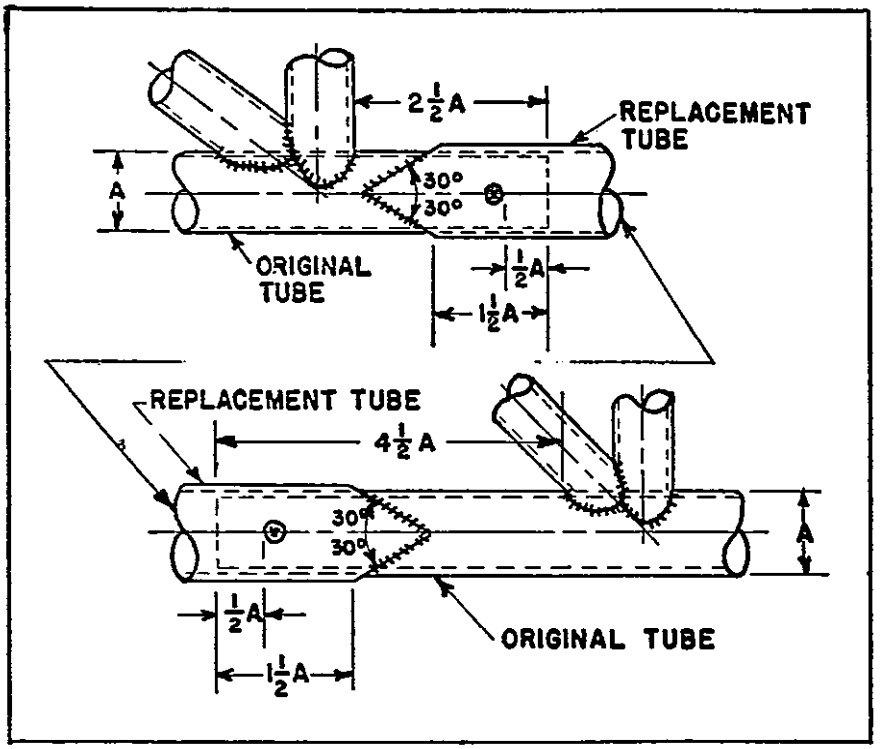

FIGURE 4–7. Splicing Using Larger Diameter Replacement Tube.

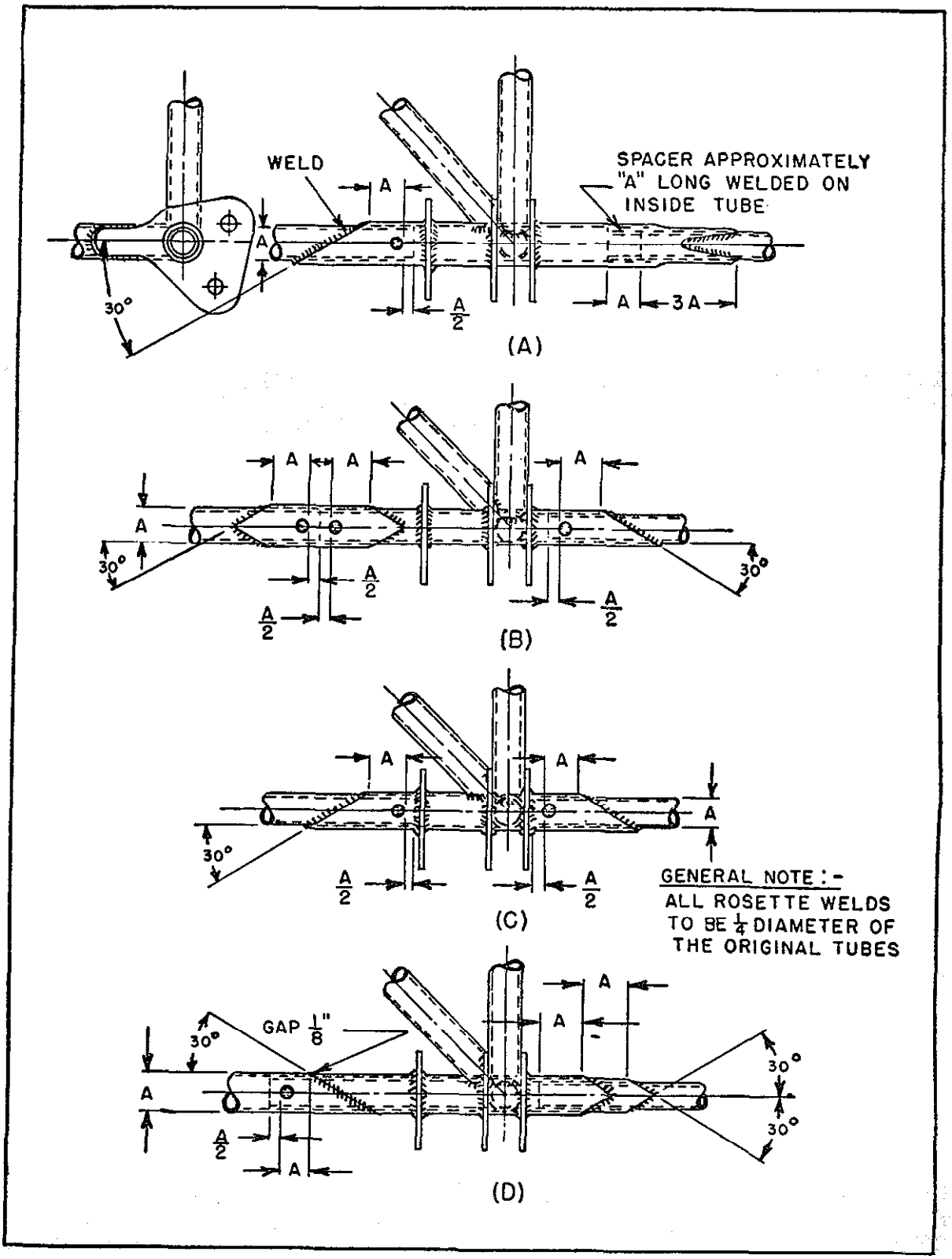

FIGURE 4–8. Repairs at Built-in Fuselage Fittings.

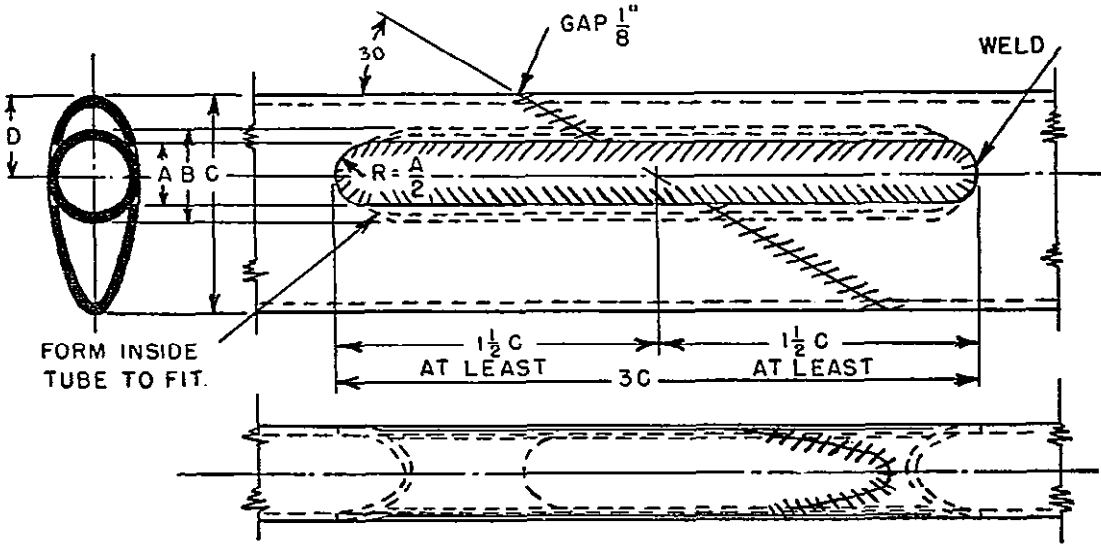

A - SLOT WIDTH (ORIGINAL TUBE)
B - OUTSIDE DIAMETER (INSERT TUBE)
C - STREAMLINE TUBE LENGTH OF MAJOR AXIS

S.L. SIZE	A	B	C	D
1"	3/8"	9/16"	1.340"	.496"
1- 1/4	3/8	11/16	1.670	.619
1- 1/2	1/2	7/8	2.005	.743
1- 3/4	1/2	1	2.339	.867
2	1/2	1-1/8	2.670	991
2- 1/4	1/2	1- 1/4	3.008	1.115
2- 1/2	1/2	1- 3/8	3.342	1.239

ROUND INSERT TUBE (B) SHOULD BE AT LEAST OF SAME MATERIAL AND ONE GAUGE THICKER THAN ORIGINAL STREAMLINE TUBE (C).

FIGURE 4-9. Streamline Tube Splice Using Round Tube (Applicable to Landing Gears).

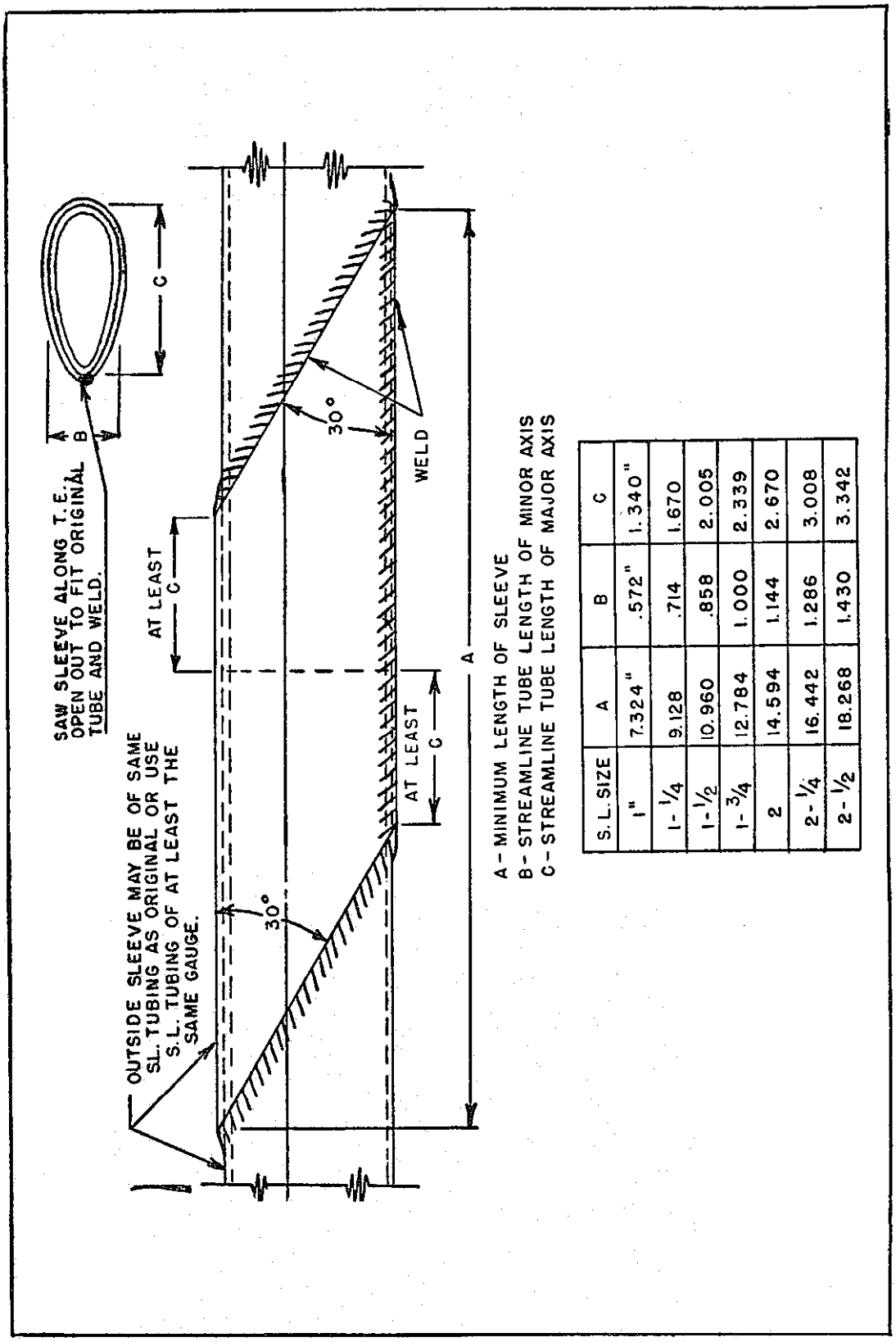

S.L. SIZE	A	B	C
1"	7.324"	.572"	1.340"
1-1/4	9.128	.714	1.670
1-1/2	10.960	.858	2.005
1-3/4	12.784	1.000	2.339
2	14.594	1.144	2.670
2-1/4	16.442	1.286	3.008
2-1/2	18.268	1.430	3.342

FIGURE 4-10. Streamline Tube Splice Using Split Sleeve (Applicable to Wing and Tail Surface Brace Struts and Other Members).

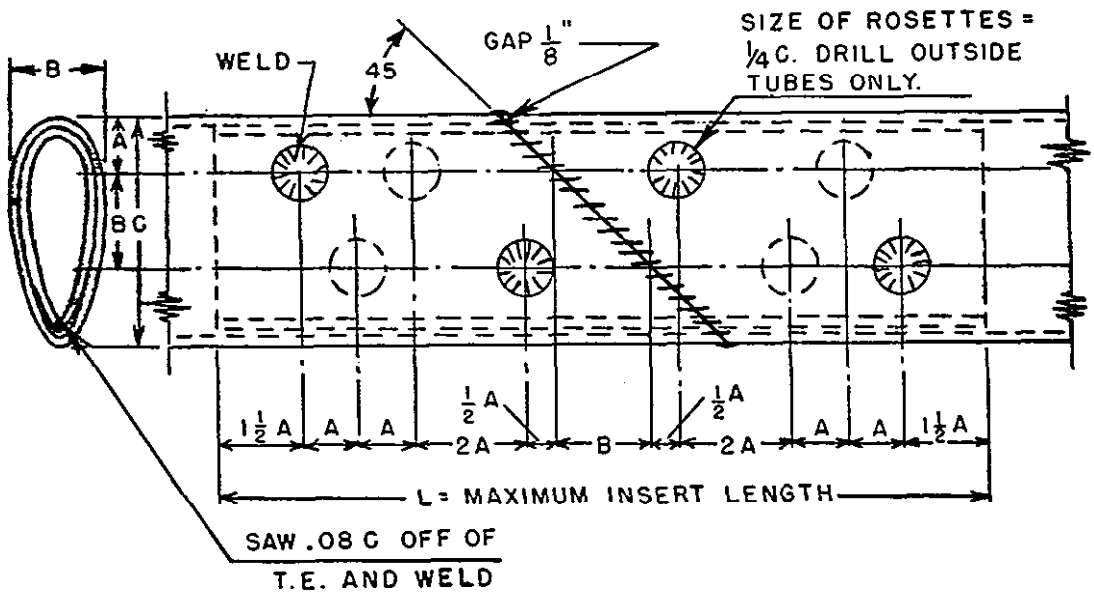

INSERT TUBE IS OF SAME STREAMLINE TUBING AS ORIGINAL.

A IS $\frac{2}{3}$ B

B IS MINOR AXIS LENGTH OF ORIGINAL STREAMLINE TUBE

C IS MAJOR AXIS LENGTH OF ORIGINAL STREAMLINE TUBE

S.L. SIZE	A	B	C	L
1"	.382	.572	1.340	5.16
1 1/4	.476	.714	1.670	6.43
1 1/2	.572	.858	2.005	7.72
1 3/4	.667	1.000	2.339	9.00
2	.763	1.144	2.670	10.30
2 1/4	.858	1.286	3.008	11.58
2 1/2	.954	1.430	3.342	12.88

FIGURE 4-11. Streamline Tube Splice Using Split Insert (Applicable to Landing Gears).

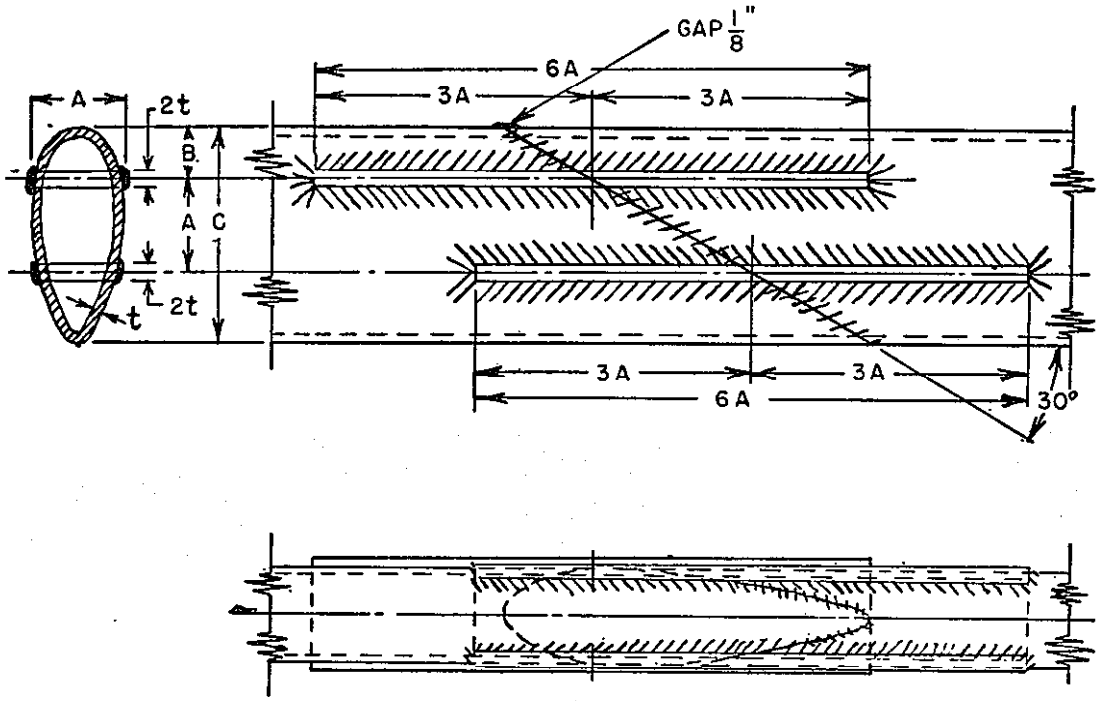

A- STREAMLINE TUBE LENGTH OF MINOR AXIS, PLATE WIDTHS.
B- DISTANCE OF FIRST PLATE FROM LEADING EDGE, 2/3 A.
C- STREAMLINE TUBE LENGTH OF MAJOR AXIS.

S.L. SIZE	A	B	C	6A
1"	.572	.382	1.340	3.43
1-1/4	.714	.476	1.670	4.28
1-1/2	.858	.572	2.005	5.15
1-3/4	1.000	.667	2.339	6.00
.2	1.144	.762	2.670	6.86
2-1/4	1.286	.858	3.008	7.72
2-1/2	1.430	.954	3.342	8.58

FIGURE 4-12. Streamline Tube Splice Using Plates (Applicable to Landing Gears).

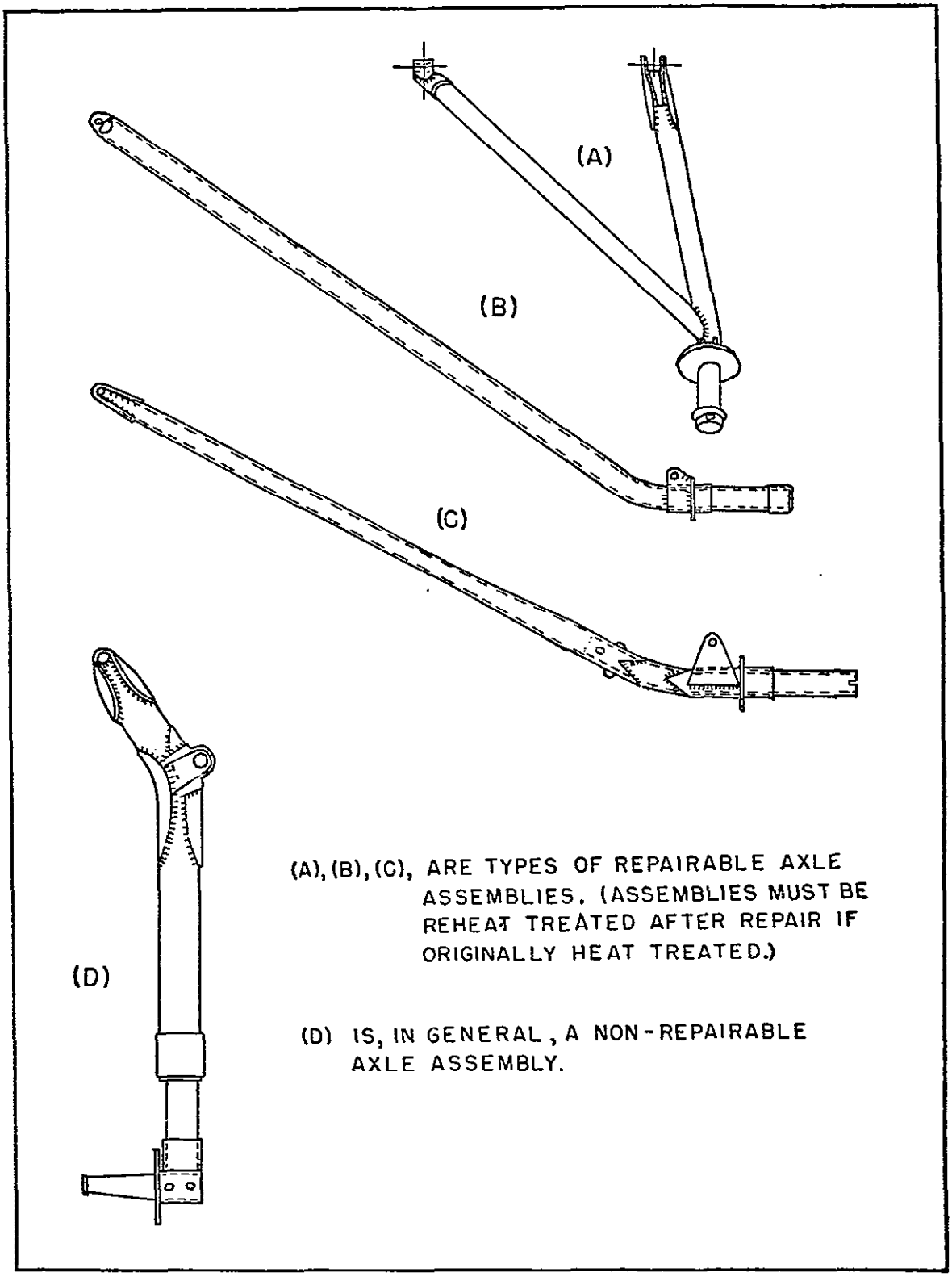

FIGURE 4–13. Representative Types of Repairable and Non-Repairable Axle Assemblies.

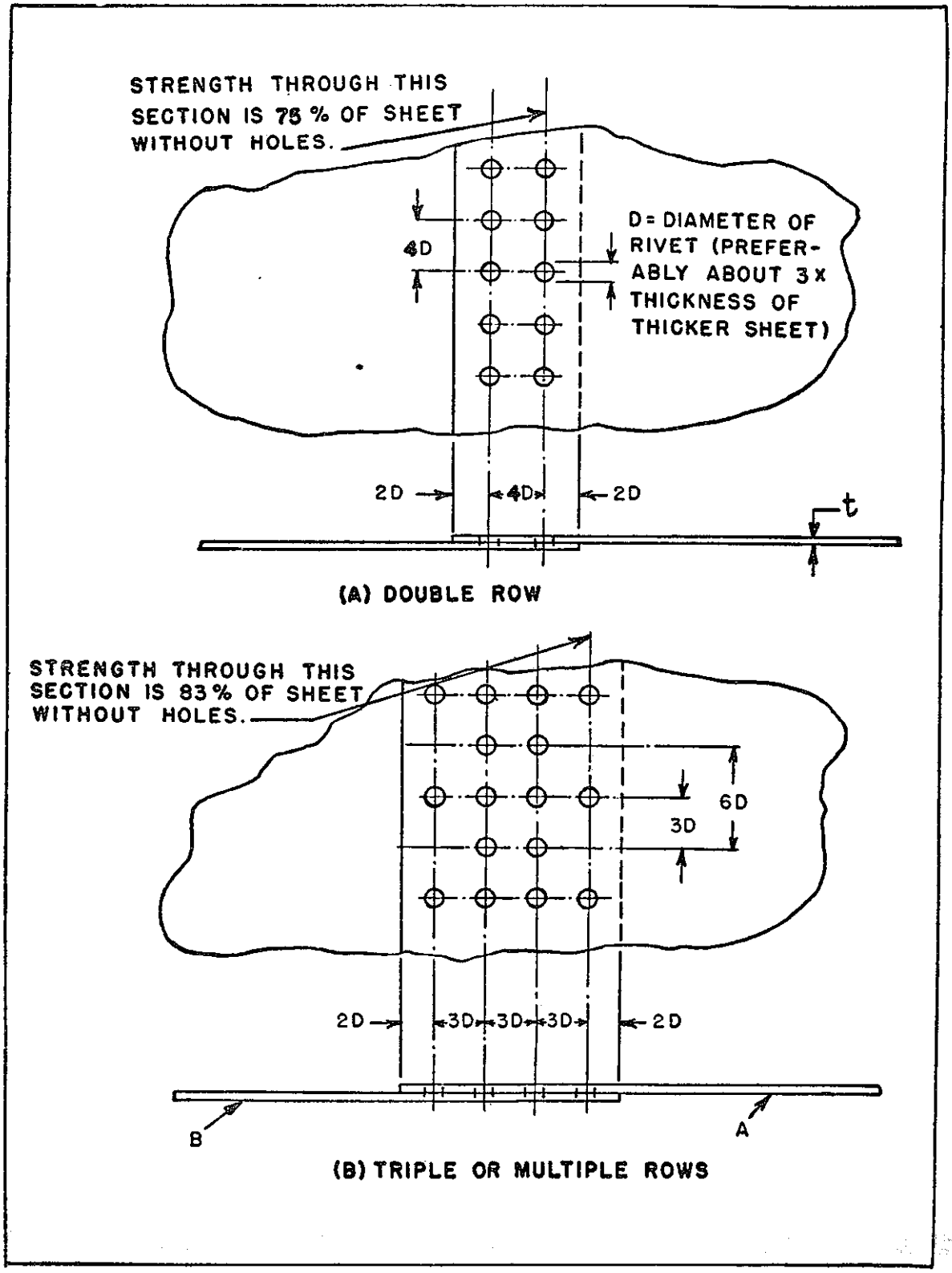

FIGURE 4-14. Rivet Hole Spacing and Edge Distance for Single-Lap Sheet Splices.

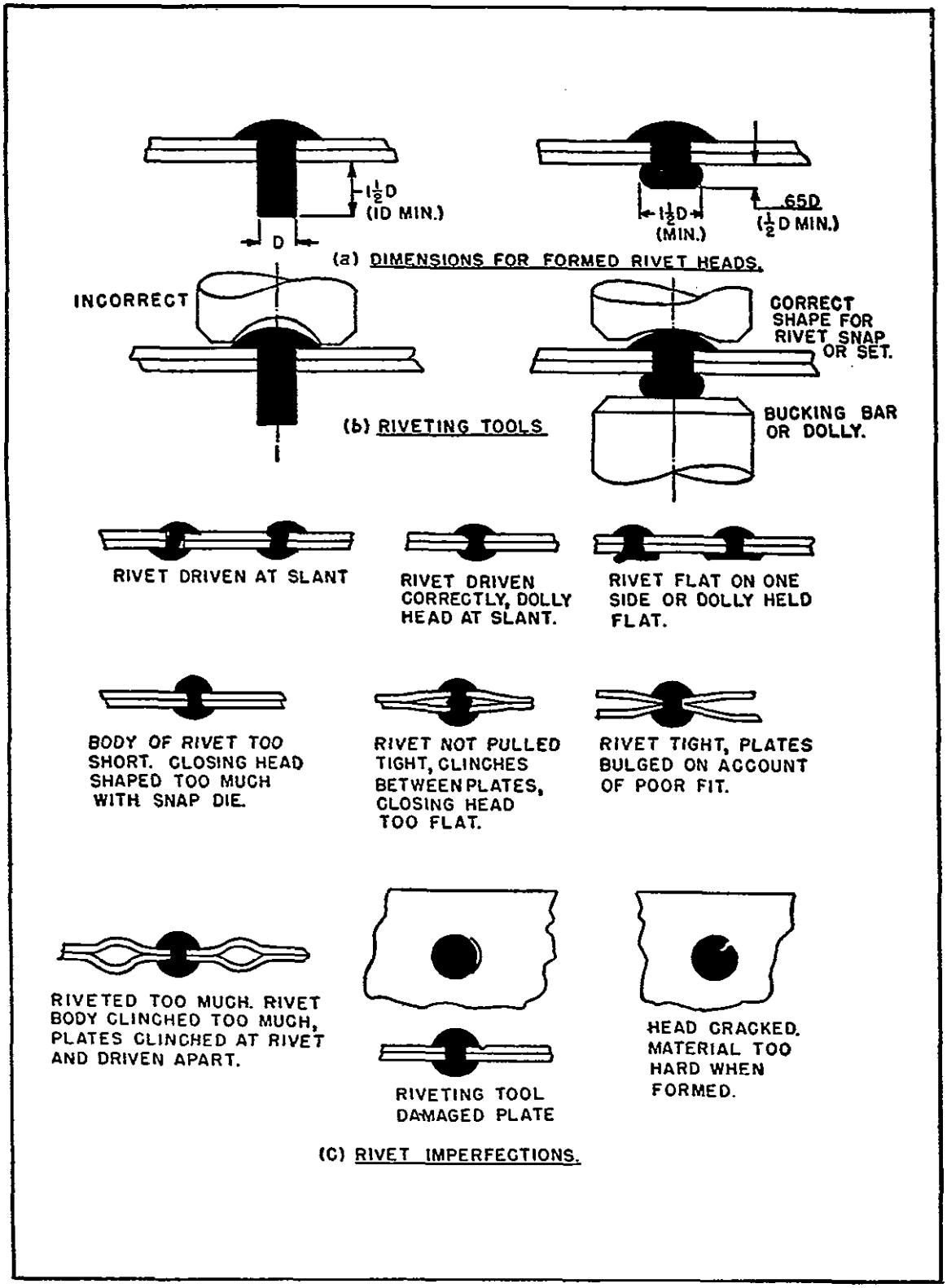

FIGURE 4–15. Riveting Practice and Rivet Imperfections.

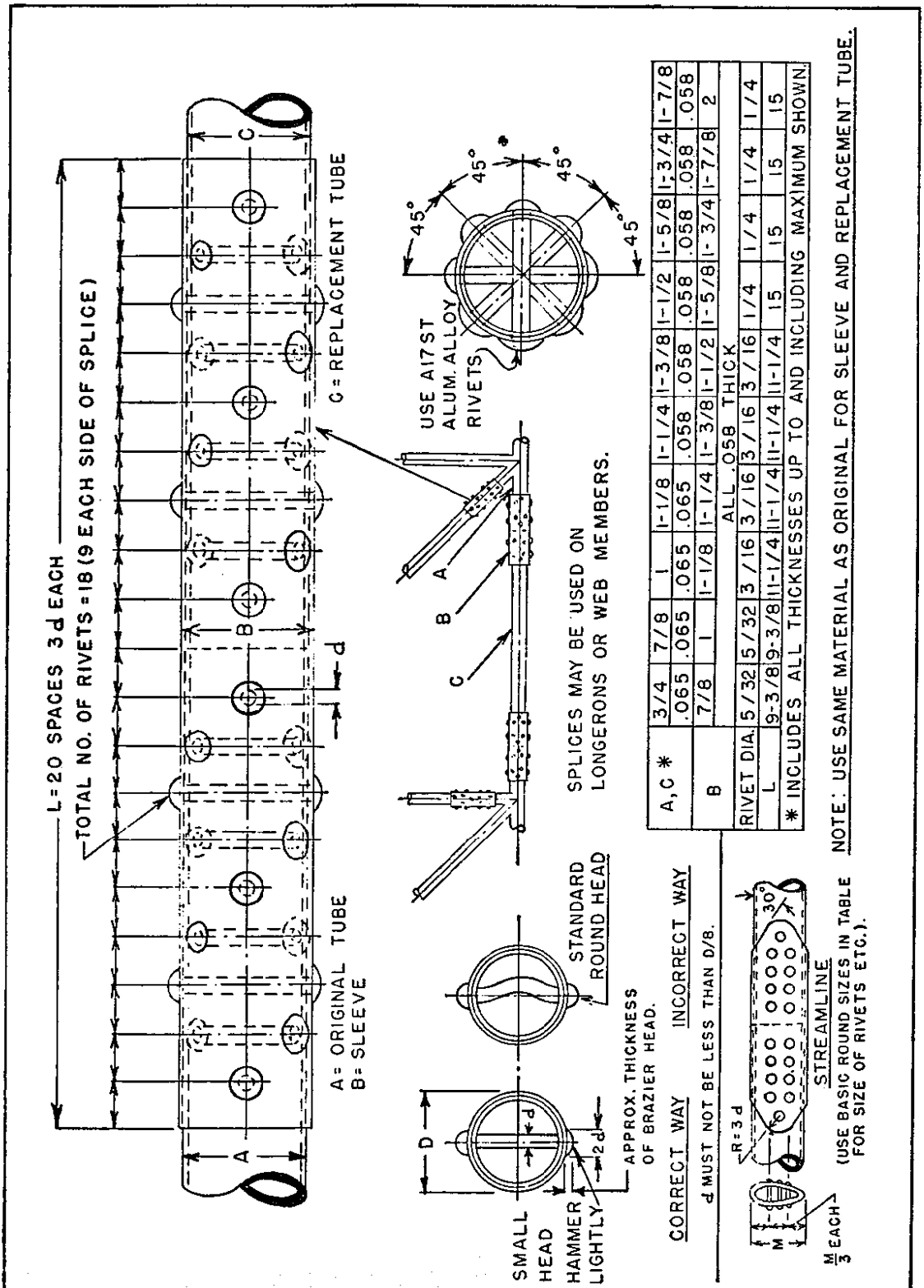

A, C *	3/4	7/8	1	1-1/8	1-1/4	1-3/8	1-1/2	1-5/8	1-3/4	1-7/8
	.065	.065	.065	.065	.058	.058	.058	.058	.058	.058
B	7/8	1	1-1/8	1-1/4	1-3/8	1-1/2	1-5/8	1-3/4	1-7/8	2
	ALL .058 THICK.									
RIVET DIA.	5/32	5/32	3/16	3/16	3/16	3/16	1/4	1/4	1/4	1/4
L	9-3/8	9-3/8	11-1/4	11-1/4	11-1/4	11-1/4	15	15	15	15

* INCLUDES ALL THICKNESSES UP TO AND INCLUDING MAXIMUM SHOWN.

NOTE: USE SAME MATERIAL AS ORIGINAL FOR SLEEVE AND REPLACEMENT TUBE.

FIGURE 4-16. Typical Repair Method for Tubular Members of Aluminum Alloy.

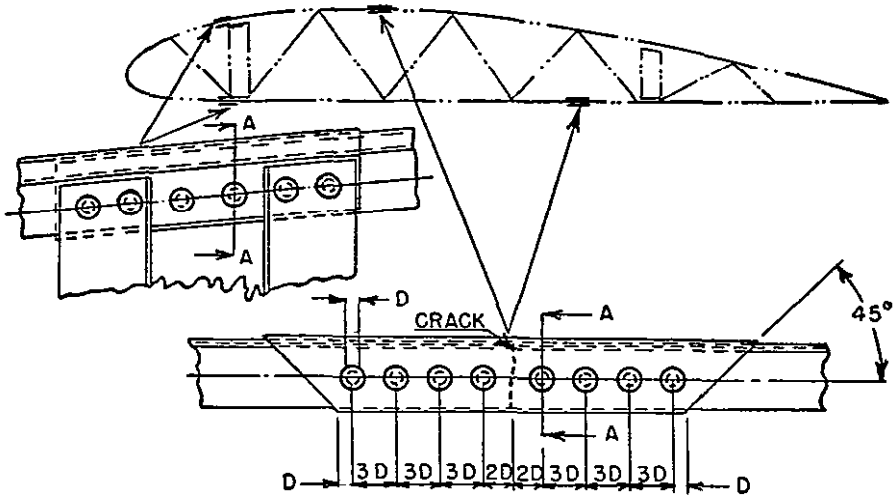

NOTE: FOR MINIMUM NUMBER OF RIVETS REQUIRED SEE CAM 18.30-4(e)(5)(vi) AND SUBSEQUENT.

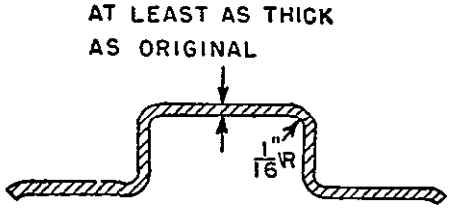

MATERIAL — DURAL OR ALUMINUM ALLOY USED IN ORIGINAL CONSTRUCTION.

SCALE — TWICE SIZE

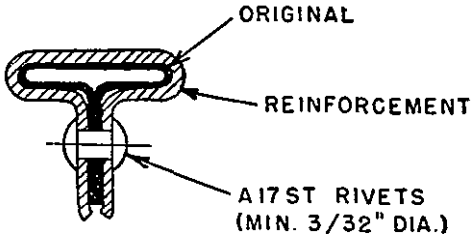

SECTION A-A
SCALE — TWICE SIZE

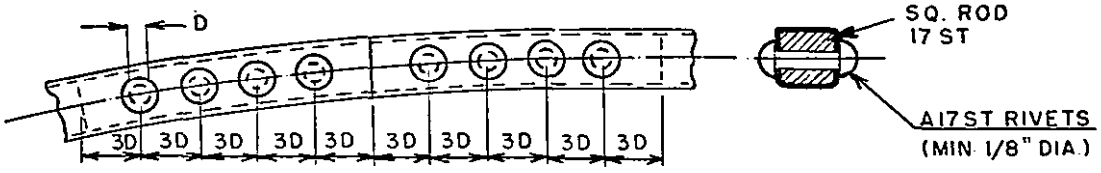

* NOTE: USUALLY FOUND ON SMALL OR MEDIUM SIZE AIRCRAFT (SEE FIG. 4-18)

FIGURE 4-17. Typical Repair for Buckled or Cracked Formed Metal Wing Rib Capstrips.

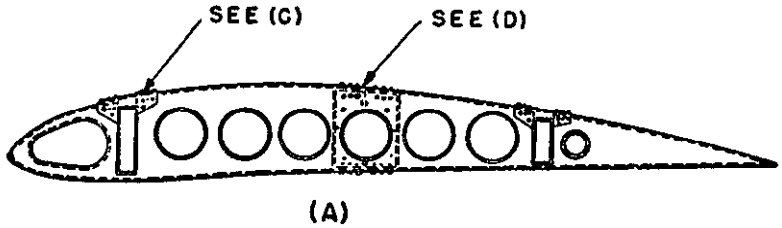

(A)

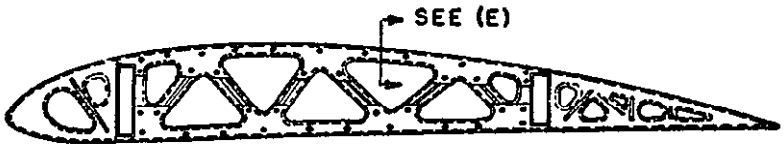

(B)

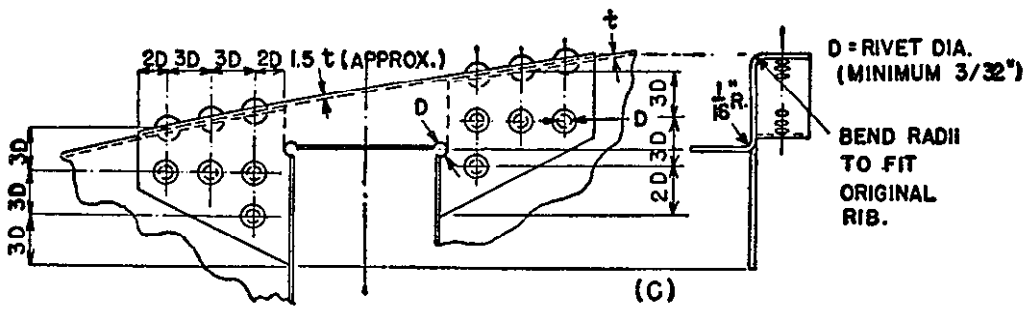

(C)

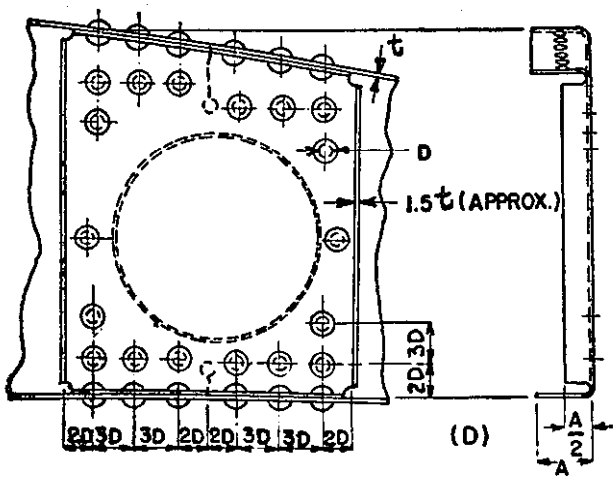

(D)

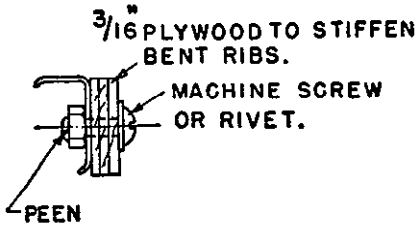

(E)

NOTE: FOR MINIMUM NUMBER OF RIVETS REQUIRED SEE CAM 18.30-4(e)(5)(vi) AND SUBSEQUENT.

FIGURE 4-18. Typical Metal Rib Repairs (Usually Found on Small and Medium-Size Aircraft).

414269 O - 57 - 13

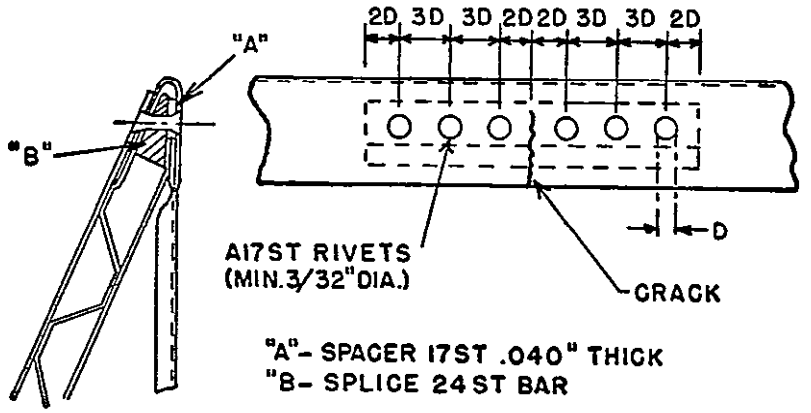

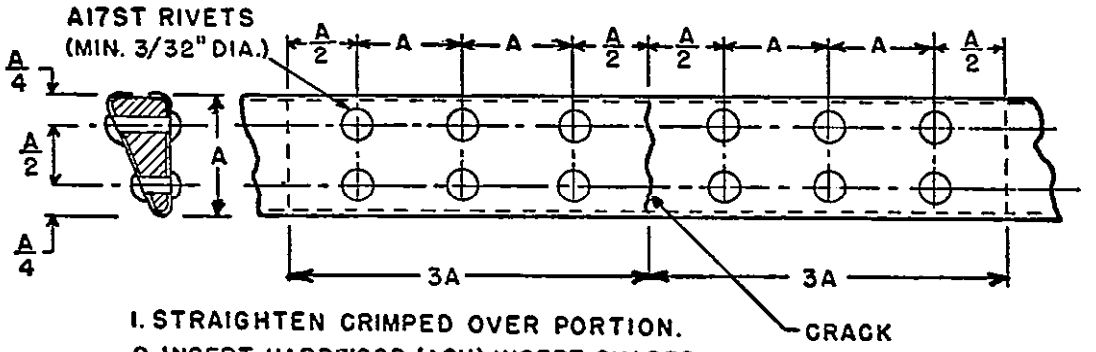

1. STRAIGHTEN CRIMPED OVER PORTION.
2. INSERT HARDWOOD (ASH) INSERT SHAPED TO CONFORM TO T. E. PIECE.

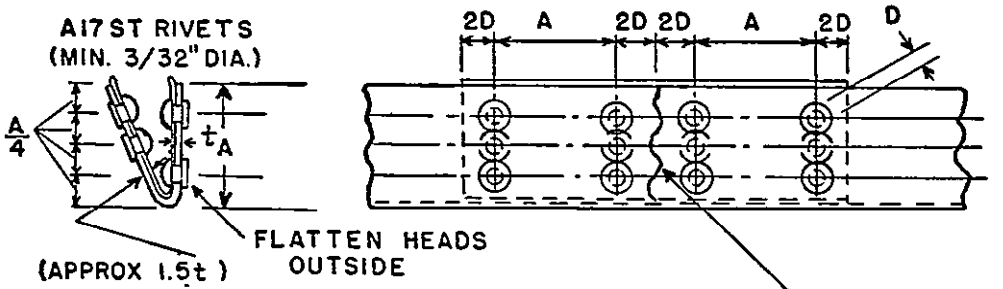

1. STRAIGHTEN CRIMPED PORTION.
2. USE SAME AL. ALLOY AS IN ORIGINAL

NOTE: FOR MINIMUM NUMBER OF RIVETS REQUIRED SEE CAM 18.30-4(e)(5)(vi) AND SUBSEQUENT

FIGURE 4–19. Typical Repairs of Trailing Edges.

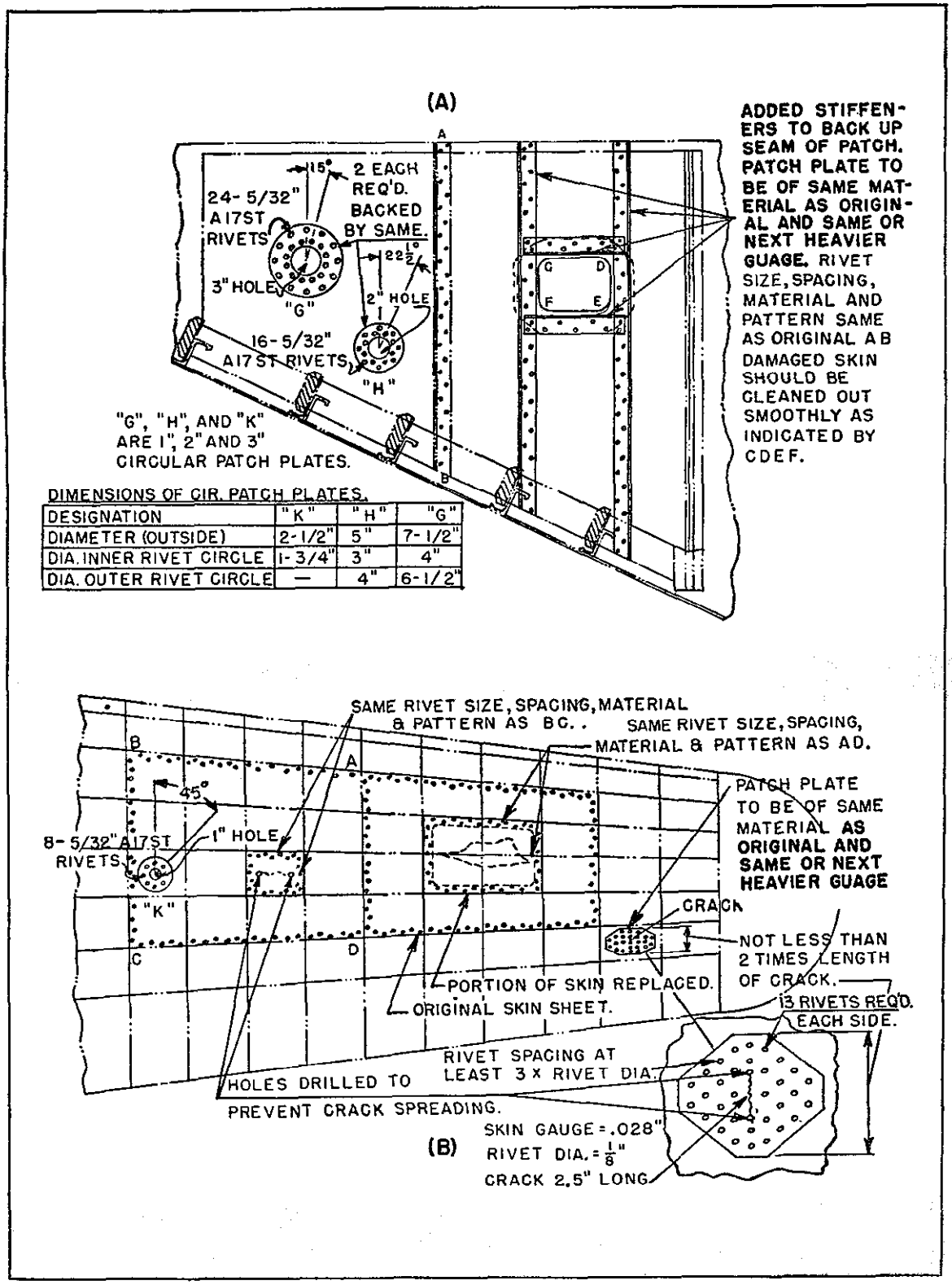

FIGURE 4–20. Typical Repairs of Stressed Sheet Covering.

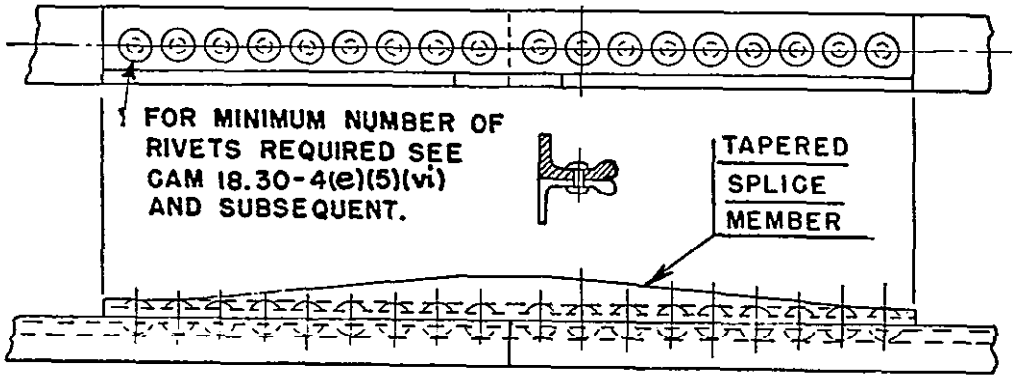

NOTE: UNSHADED SECTIONS ARE ORIGINAL AND/OR REPLACEMENT SECTIONS. SHADED SECTIONS ARE CONNECTING OR REINFORCING SECTIONS.

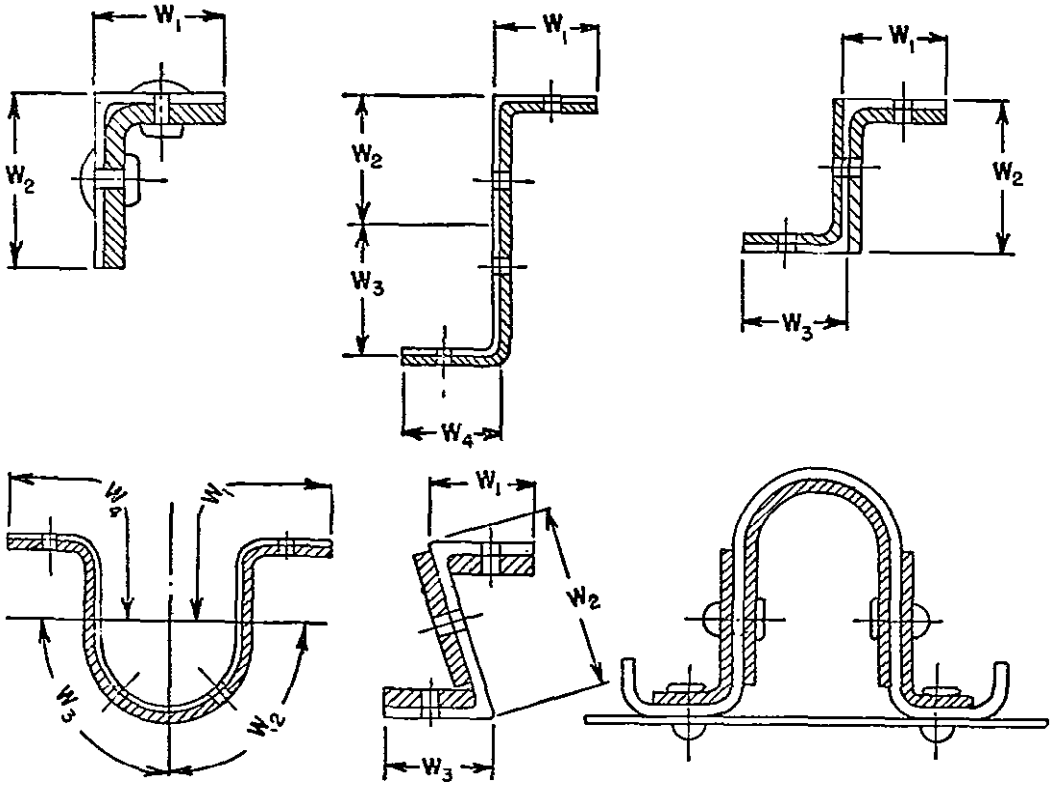

FIGURE 4-21. Typical Stringer and Flange Splices.

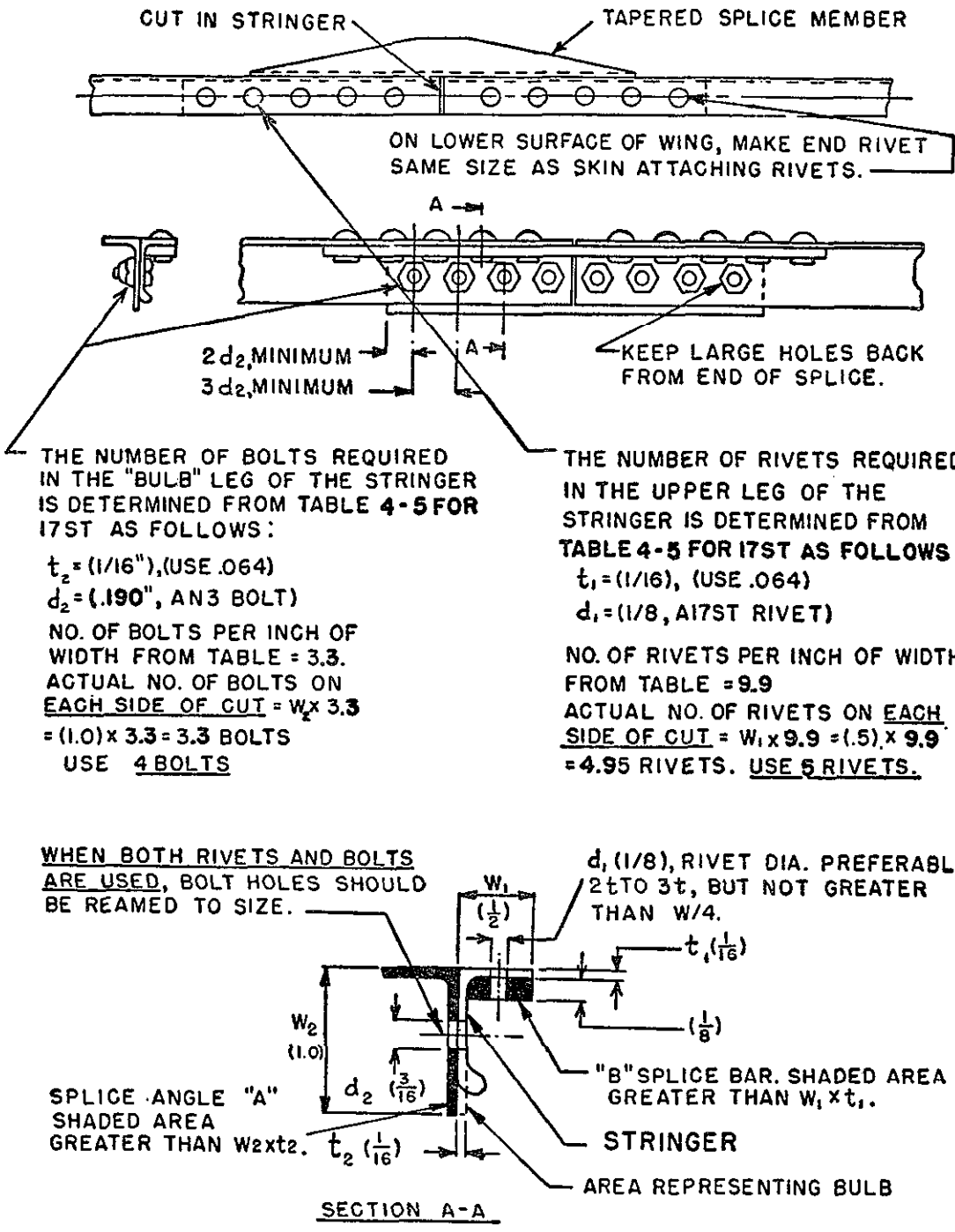

FIGURE 4-22. Example of Stringer Splice (Material—17ST AL Alloy).

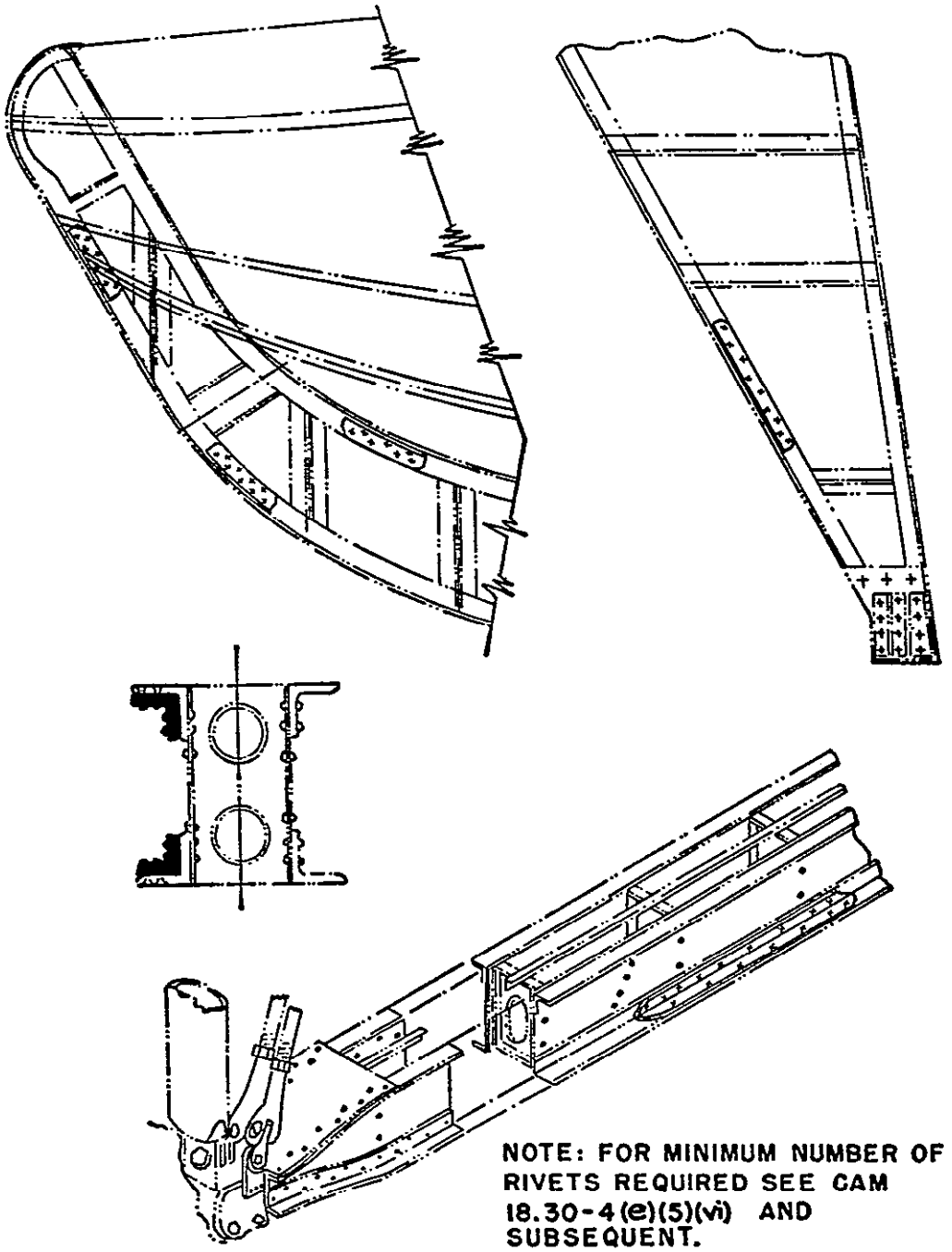

FIGURE 4-23. Application of Typical Flange Splices and Reinforcement.

THE NUMBER OF RIVETS REQUIRED IN EACH LEG ON EACH SIDE OF THE CUT IS DETERMINED BY THE WIDTH "W", THICKNESS OF FRAME MATERIAL "t" AND RIVET DIAMETER "d", USING **TABLE 4-5 (FOR 17ST)** IN A MANNER SIMILAR TO THAT FOR STRINGERS, FIG. **4-22**

NOTE (b), **TABLE 4-5 INDICATES** THAT ONLY 60% OF THE NUMBER OF RIVETS SO CALCULATED NEED BE USED IN SPLICES IN INTERMEDIATE FRAMES.

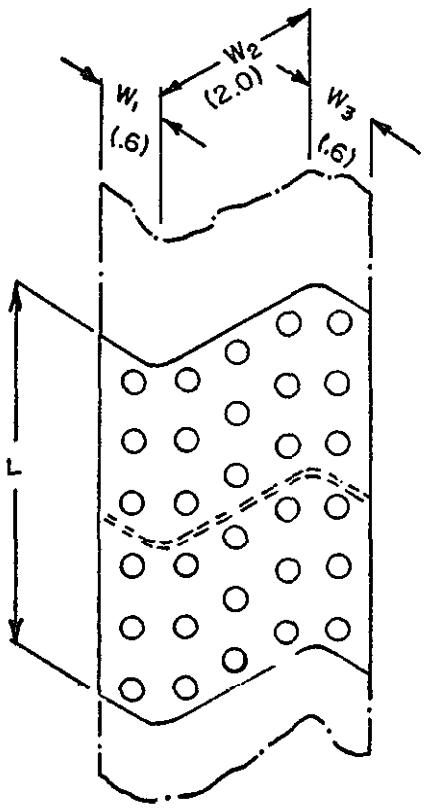

EXAMPLE

FLANGE LEG

t = (.040)

d_1 = (1/8, A17ST RIVET)

W_1 = (.6) IN.

NO. OF RIVETS PER IN. OF WIDTH, **FROM TABLE 4-5 (FOR 17ST) = 6.2**

NO. OF RIVETS IN LEG = $W_1 \times 6.2$ = (.6) x 6.2 = 3.72, SAY 4 RIVETS.
60% OF 4 = .6 x 4 = 2.4 RIVETS.

USE 3 RIVETS, EACH SIDE OF CUT.

BACK OF ZEE (OR CHANNEL)

t = (.040)

d_2 = (1/8, A17ST RIVET)

W_2 = 2.0 INS.

NO. OF RIVETS PER IN. OF WIDTH, **FROM TABLE 4-5 = 6.2 = (2) x 6.2 = 12.4**
SAY 13 RIVETS. 60% OF 13 = 7.8 RIVETS.

USE 8 RIVETS, EACH SIDE OF CUT.

"L" SHOULD BE MORE THAN TWICE W_2

THICKNESS OF SPLICE PLATE GREATER THAN THAT OF FRAME.

FIGURE 4-24. Example of Splice of Intermediate Frame (Material—17ST AL Alloy).

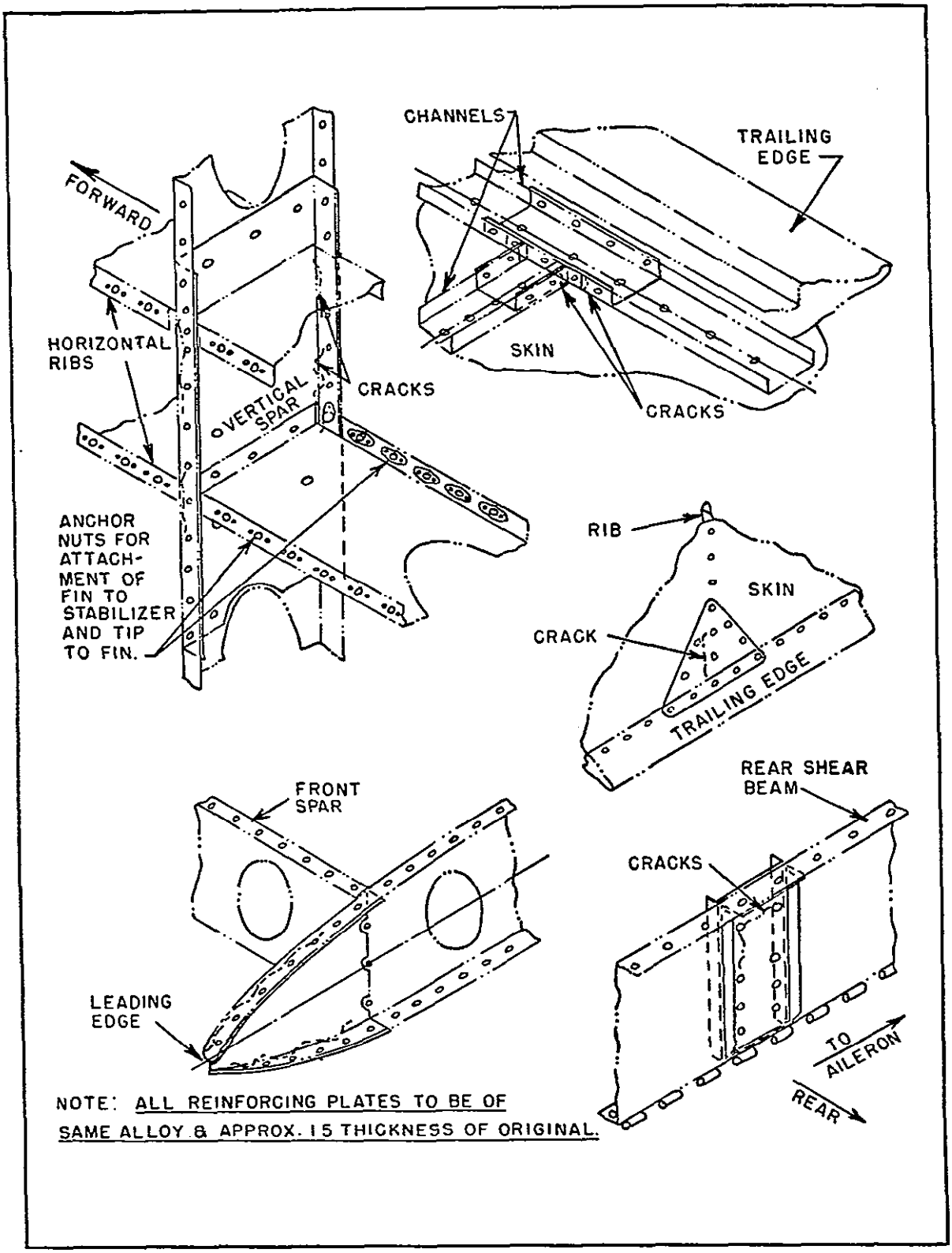

FIGURE 4-25. Typical Methods of Repairing Cracked Leading and Trailing Edges and Rib Intersections.

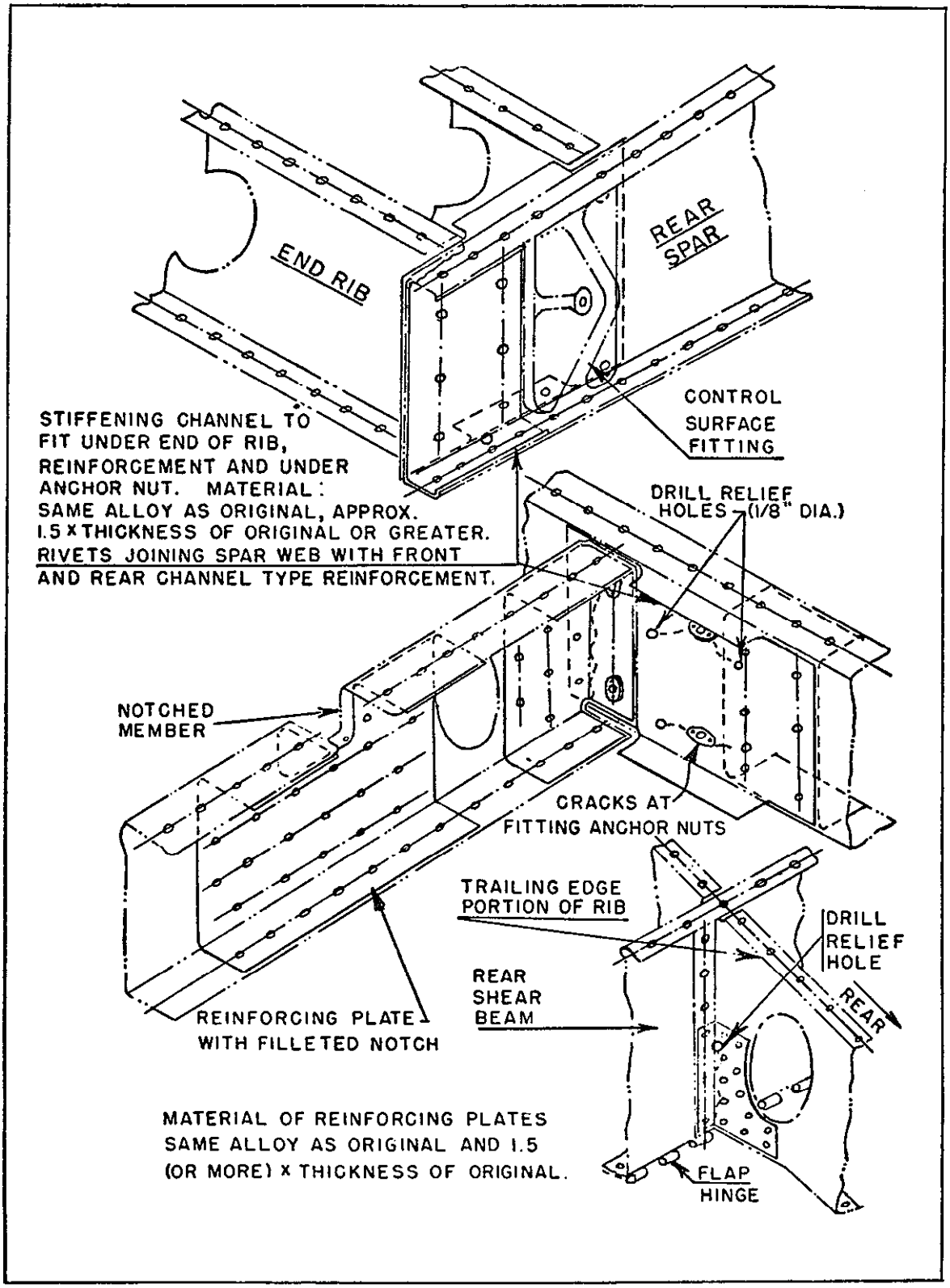

FIGURE 4-26. Typical Methods of Replacing Cracked Members at Fittings.

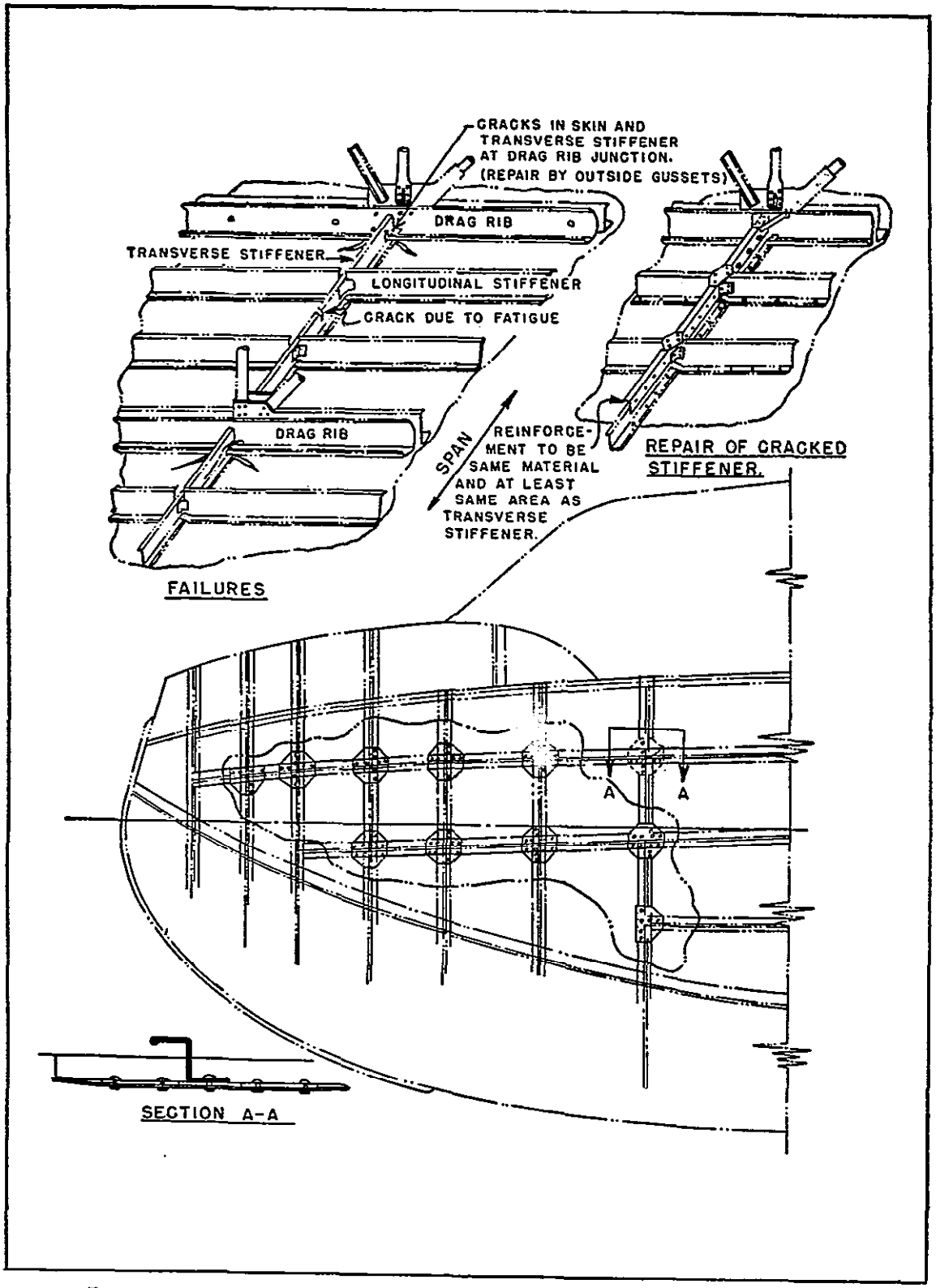

FIGURE 4-27. Typical Methods of Repairing Cracked Frame and Stiffener Combinations.

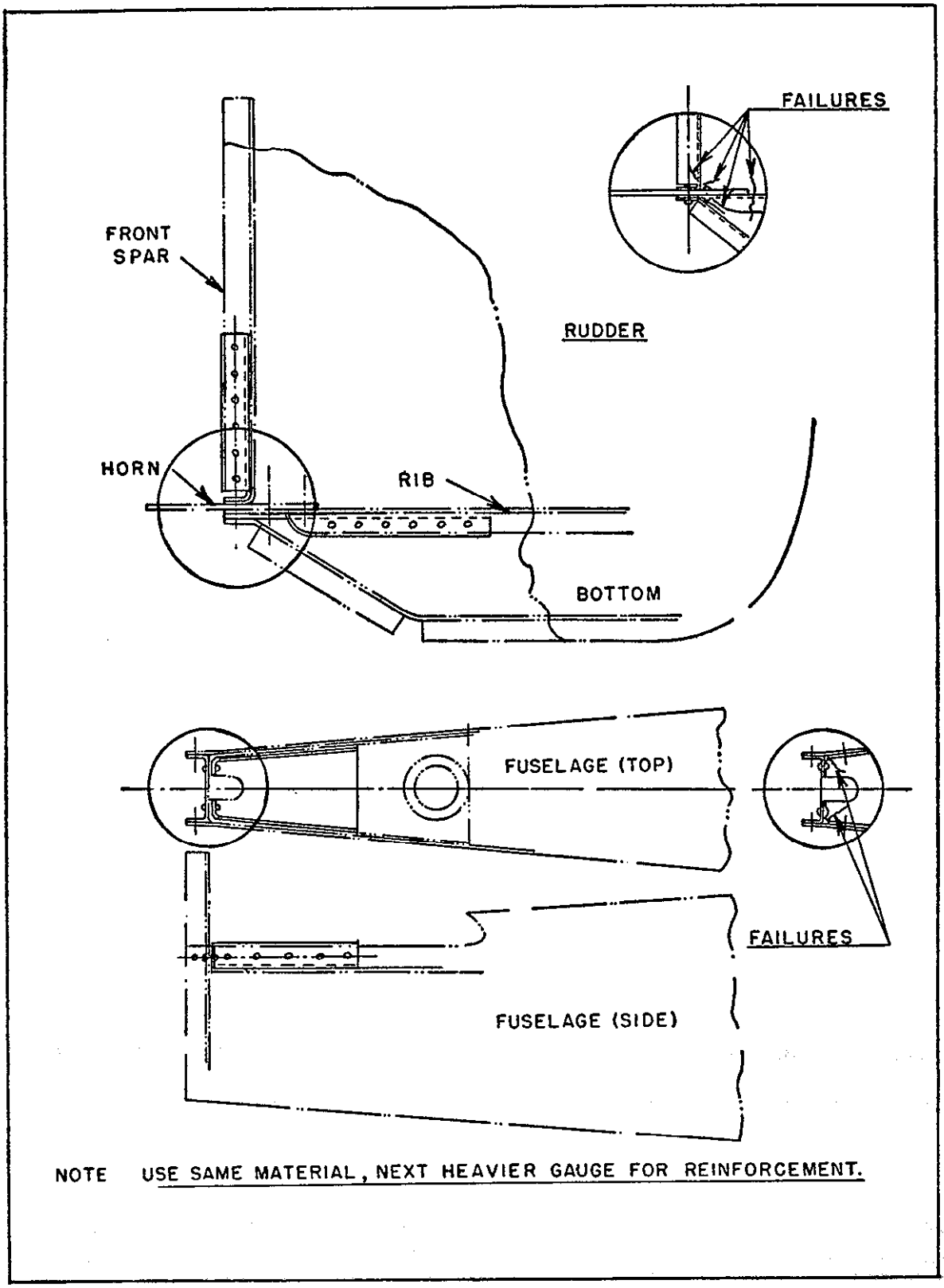

FIGURE 4-28. Typical Repairs to Rudder and to Fuselage at Tail Post.

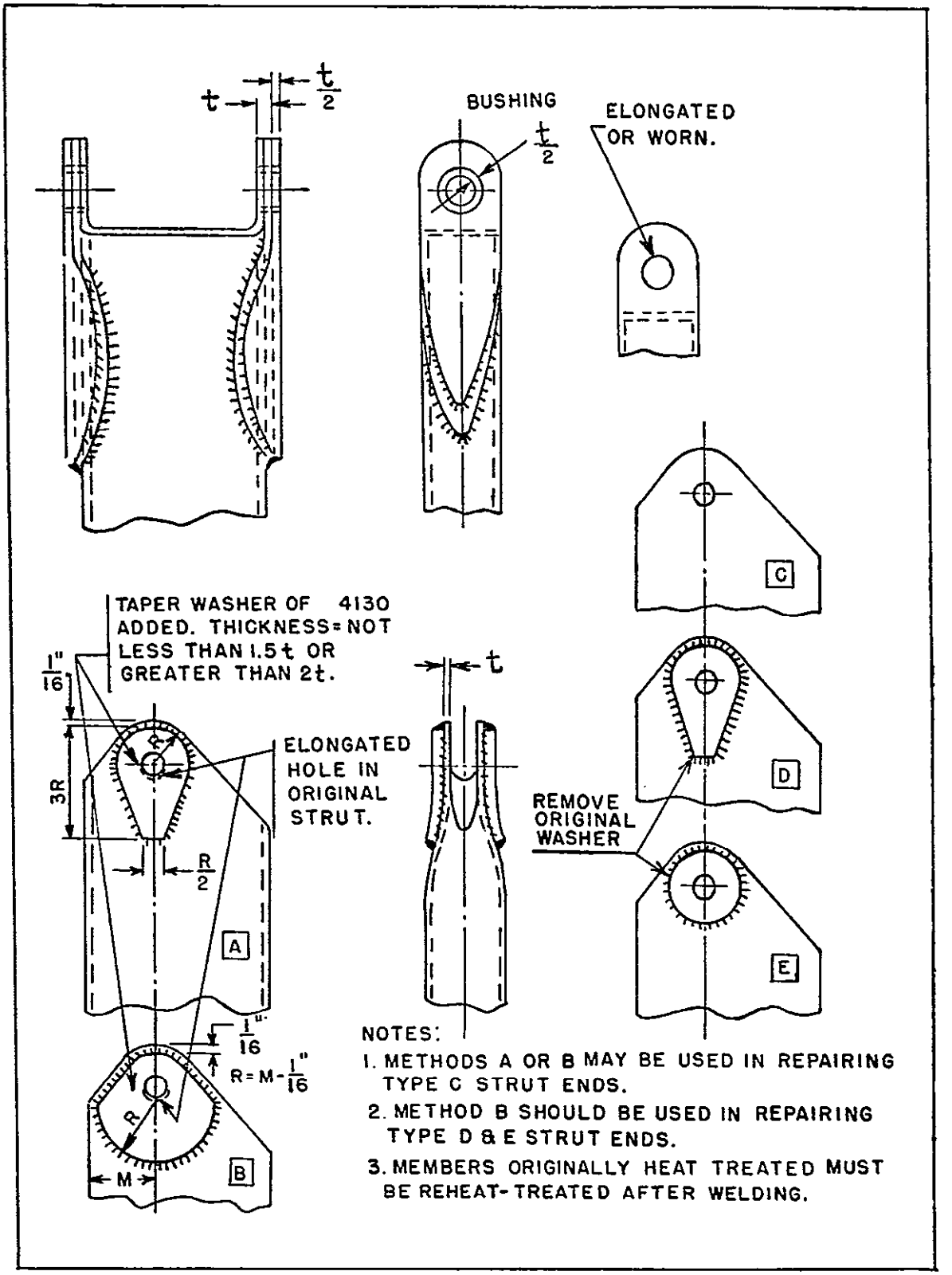

FIGURE 4-29. Typical Methods of Repairing Elongated or Worn Bolt Holes.

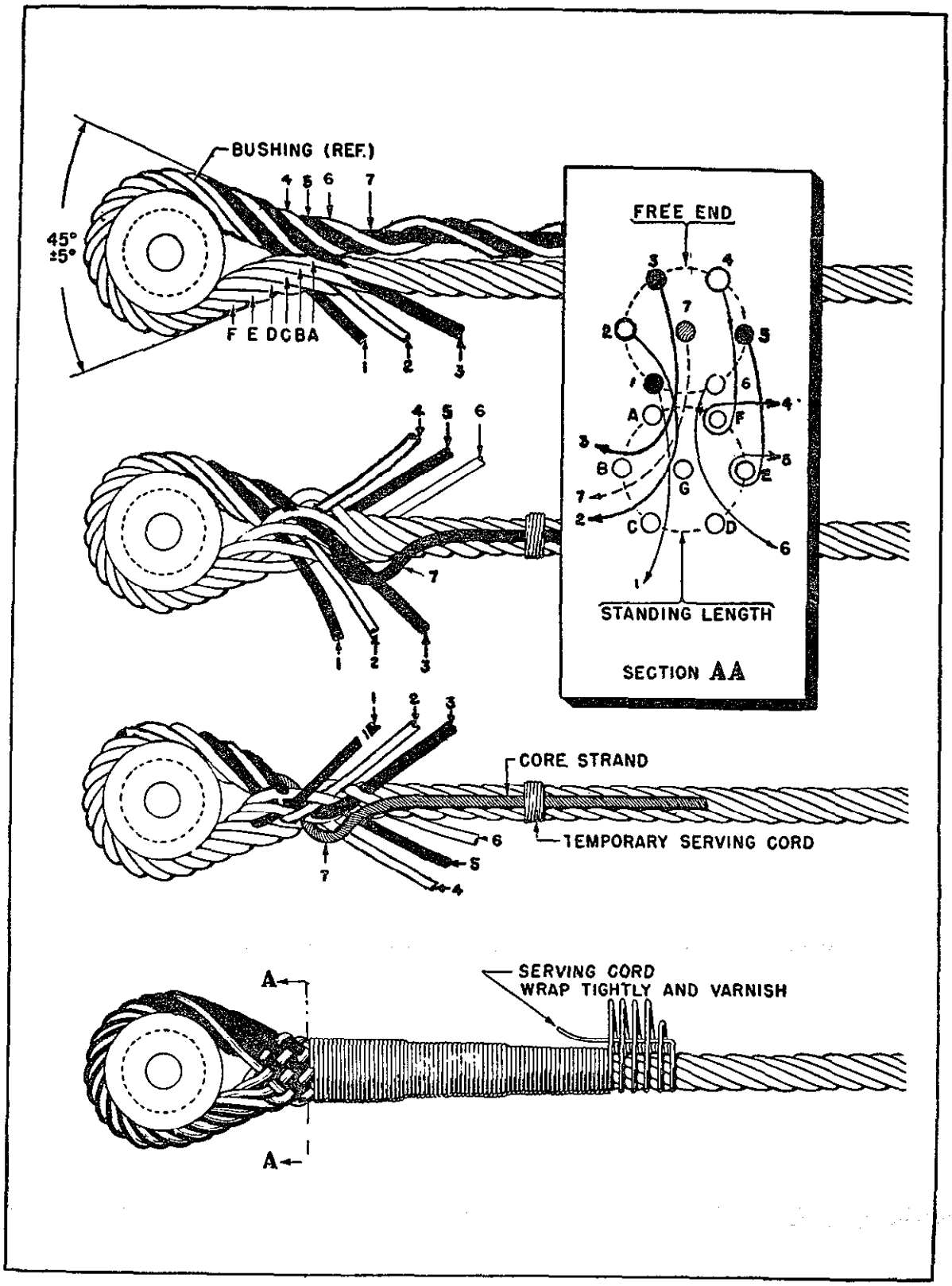

FIGURE 5-1. Preparation of a Woven Cable Splice.

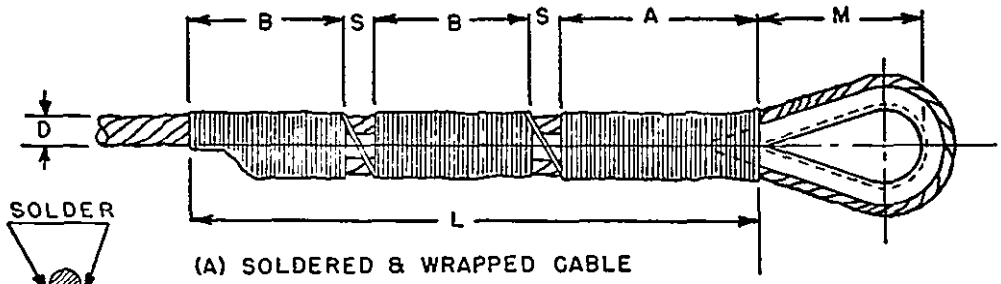

SOLDER

SECTION AT "S"

(A) SOLDERED & WRAPPED CABLE TERMINAL WITH THIMBLE.

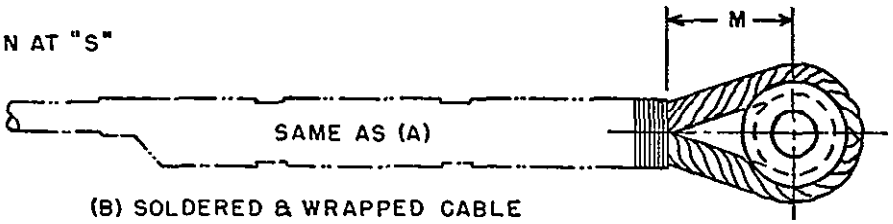

(B) SOLDERED & WRAPPED CABLE TERMINAL WITH BUSHING.

D	L	A	B	M	S	WRAPPING WIRE #48-19*		SPECIFICATION NO.	
		PLUS OR MINUS 1/32"				DIA. INCH.	APPROX. LENGTH	THIMBLE (A)	BUSHING (B)
3/32	2-1/4	3/4	5/8	3/4	1/8	.020	37"	AN-100-3	AN-111-3
1/8	2-3/4	1	3/4	3/4	1/8	.025	58"	AN-100-4	AN-111-4
5/32	3-3/8	1-1/8	1	7/8	1/8	.025	82"	AN-100-5	AN-111-5
3/16	3-5/8	1-1/4	1	1-1/8	3/16	.035	109"	AN-100-6	AN-111-6
7/32	4	1-3/8	1-1/8	1-1/4	3/16	.035	——	AN-100-7	AN-111-7
1/4	4-1/2	1-1/2	1-1/4	1-1/2	1/4	.035	159"	AN-100-8	AN-111-8
5/16	5-1/4	1-3/4	1-1/2	1-7/8	1/4	.050	195"	AN-100-10	AN-111-10
3/8	6-1/4	2-1/4	1-3/4	2-1/8	1/4	.050	——	AN-100-12	AN-111-12
7/16	7	2-1/2	2	2-1/2	1/4	.050	——	AN-100-14	——
1/2	8	2-3/4	2-1/4	2-7/8	3/8	.050	——	AN-100-16	——

*ARMY SPECIFICATION- AN-QQ-W-435

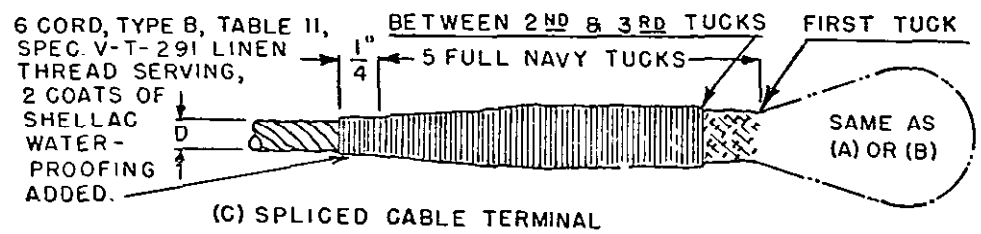

(C) SPLICED CABLE TERMINAL

FIGURE 5-2. Wrapped or Spliced Cable Terminals.

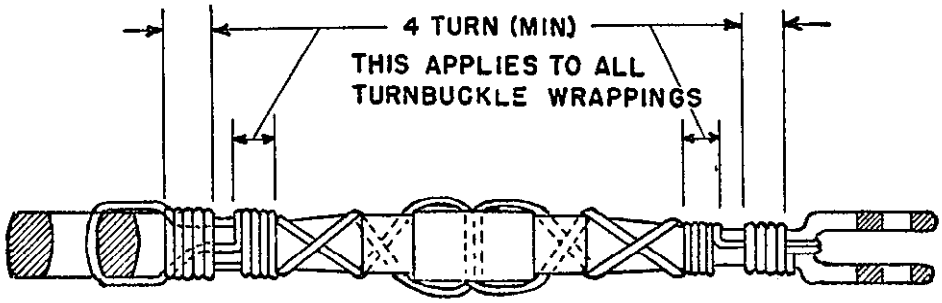

(A) DOUBLE WRAP (SPIRAL)

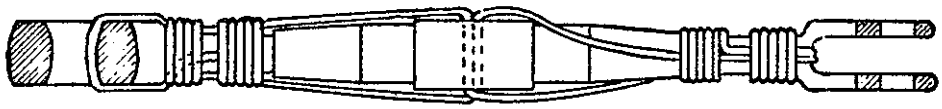

(B) DOUBLE WRAP

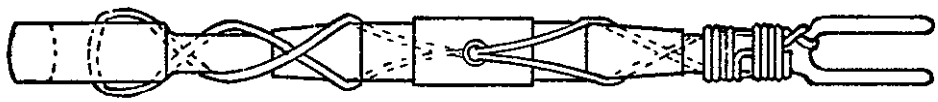

(C) SINGLE WRAP (SPIRAL)

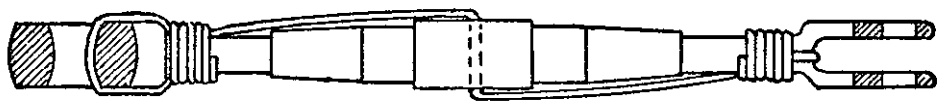

(D) SINGLE WRAP

FIGURE 5-3. Safetying Turnbuckles.

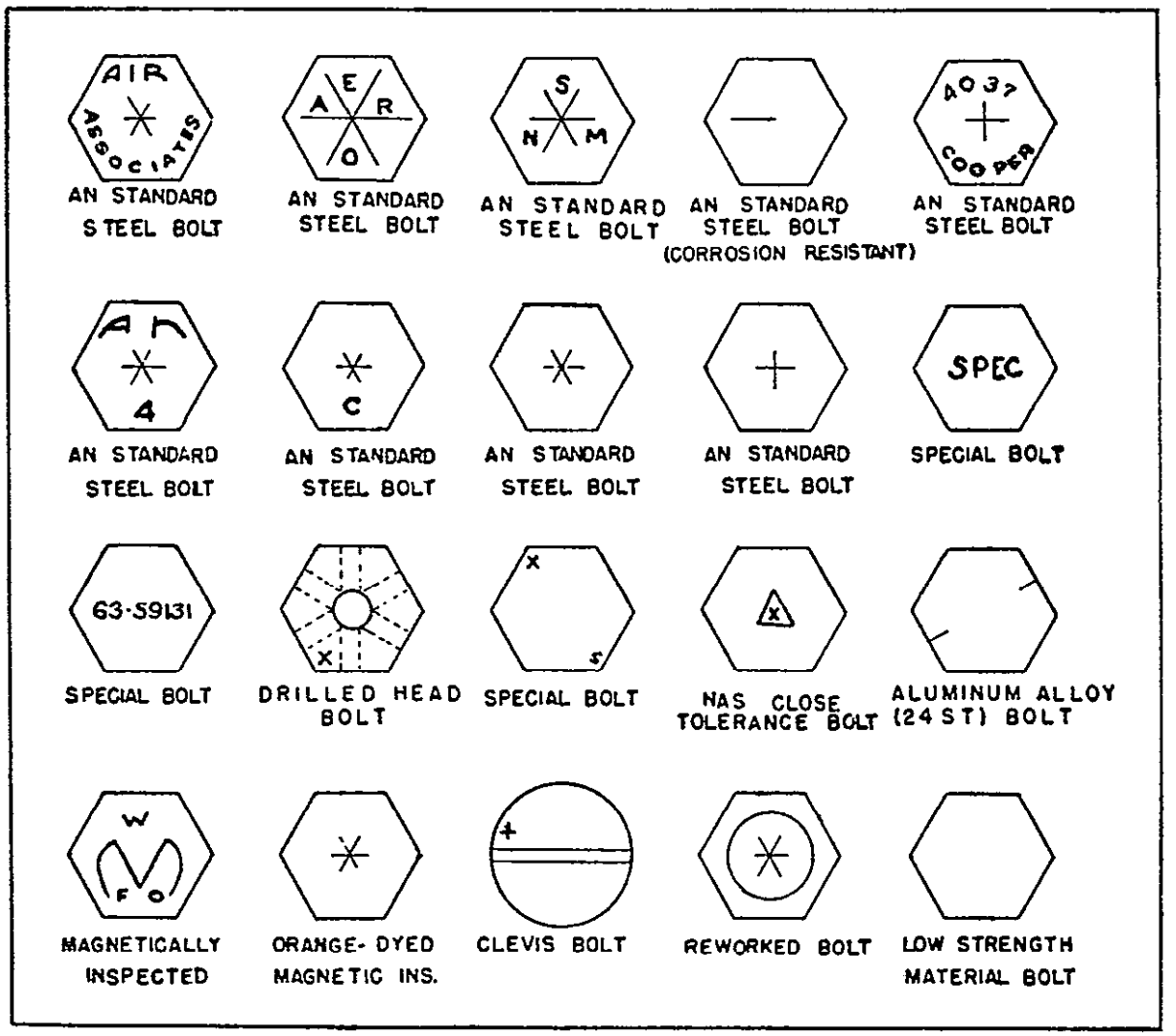

FIGURE 6-1. Bolt Identification.

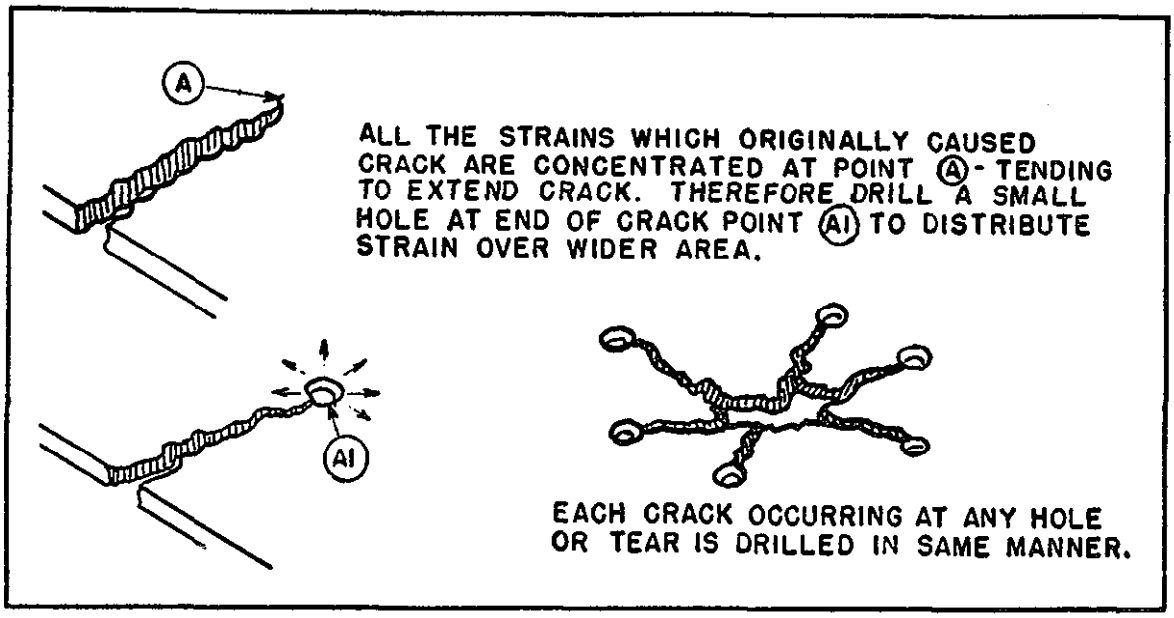

FIGURE 10–1. Stop-Drilling Cracks.

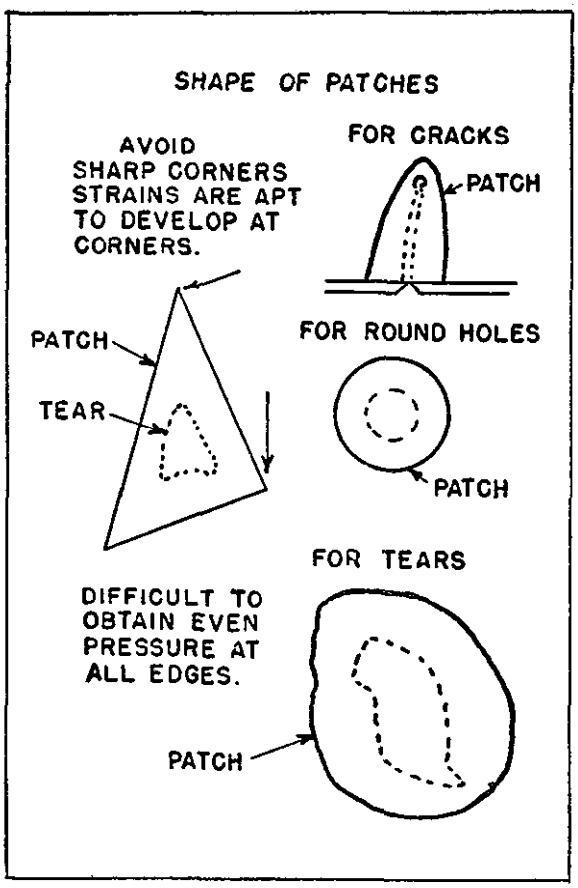

FIGURE 10–2. Surface Patches.

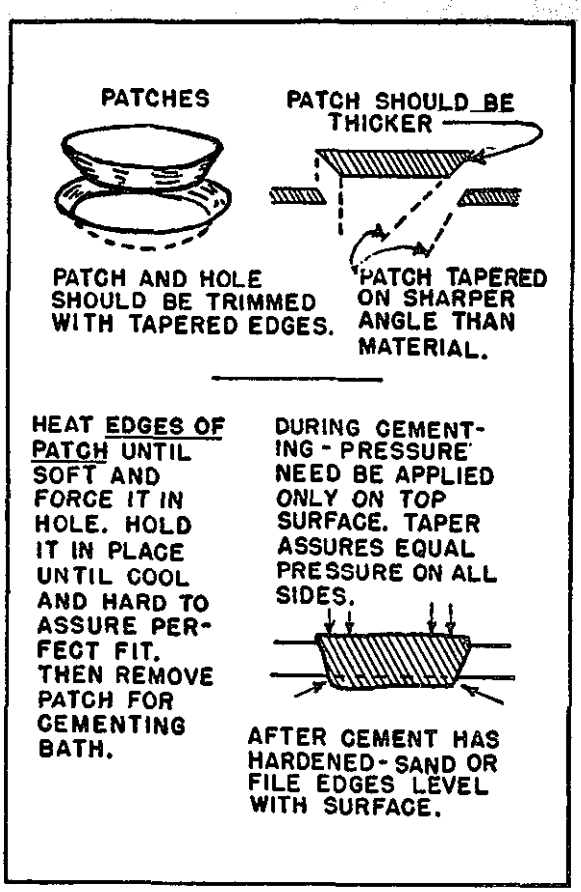

FIGURE 10–3. Plug-Patch Repair.

414269 O - 57 - 14

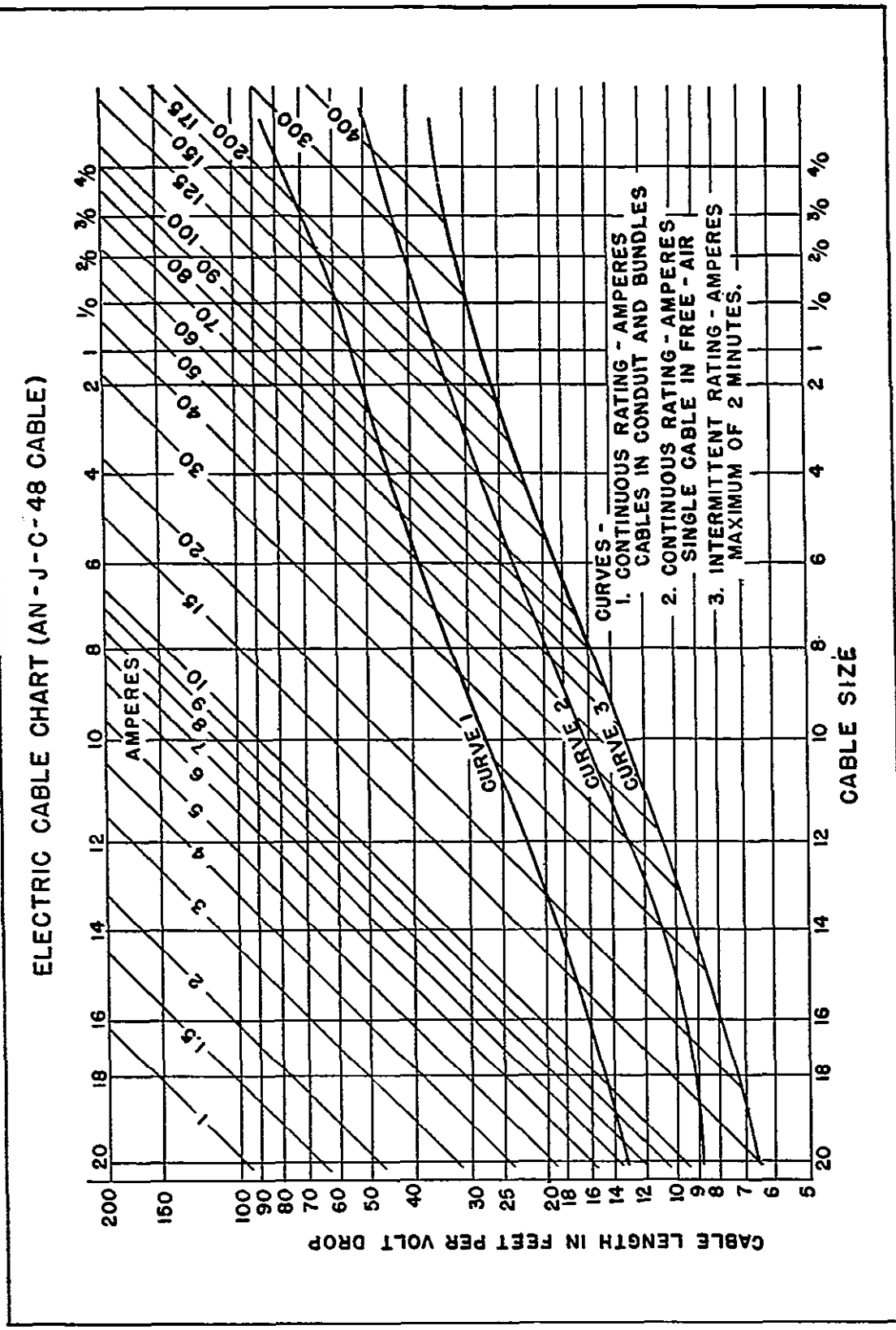

FIGURE 12-1. Electric Cable Chart (AN-S-C-48 Cable).

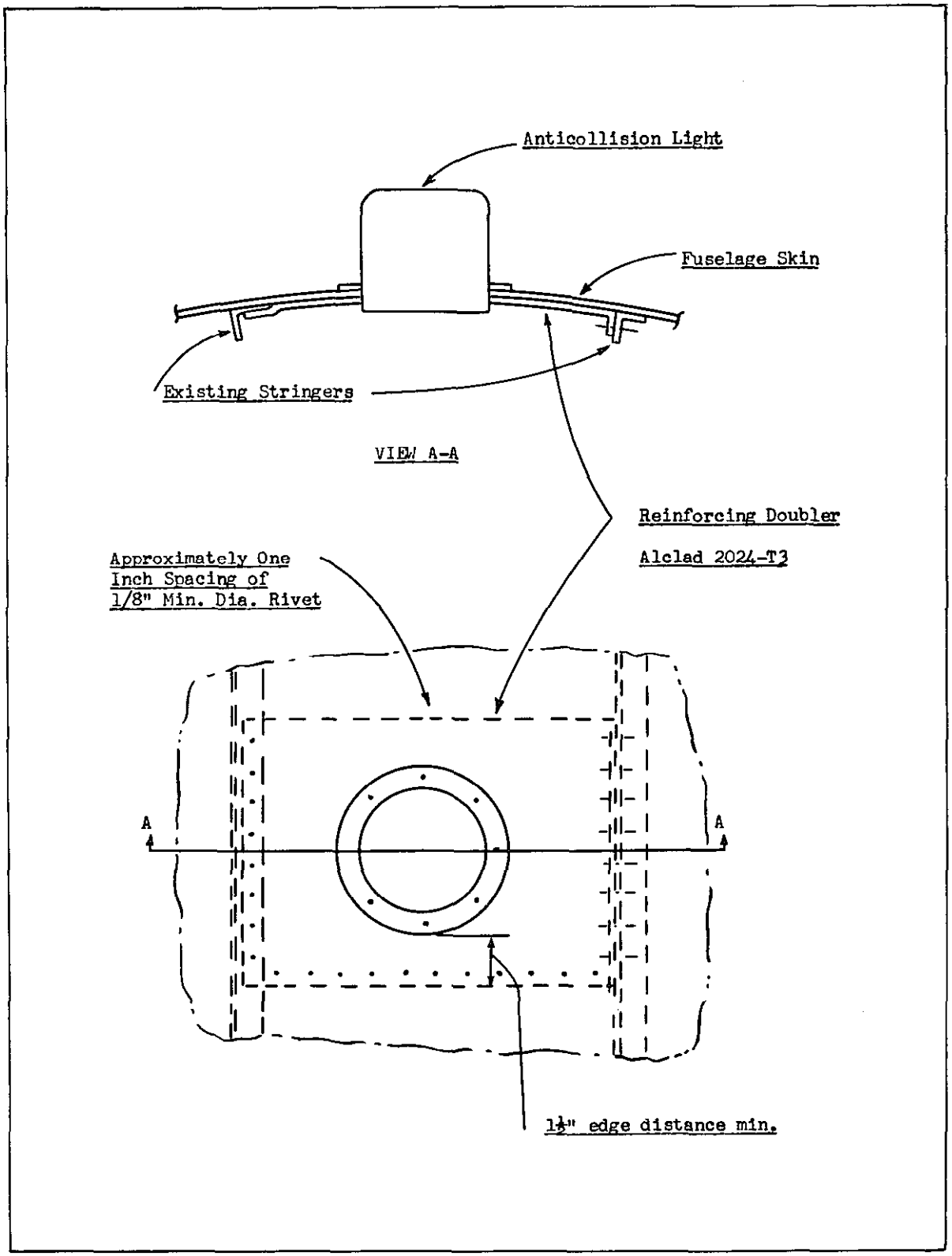

[FIGURE 12-2. Typical Anticollision Light Installation in a Skin Panel.]

(Rev. 7/1/57)

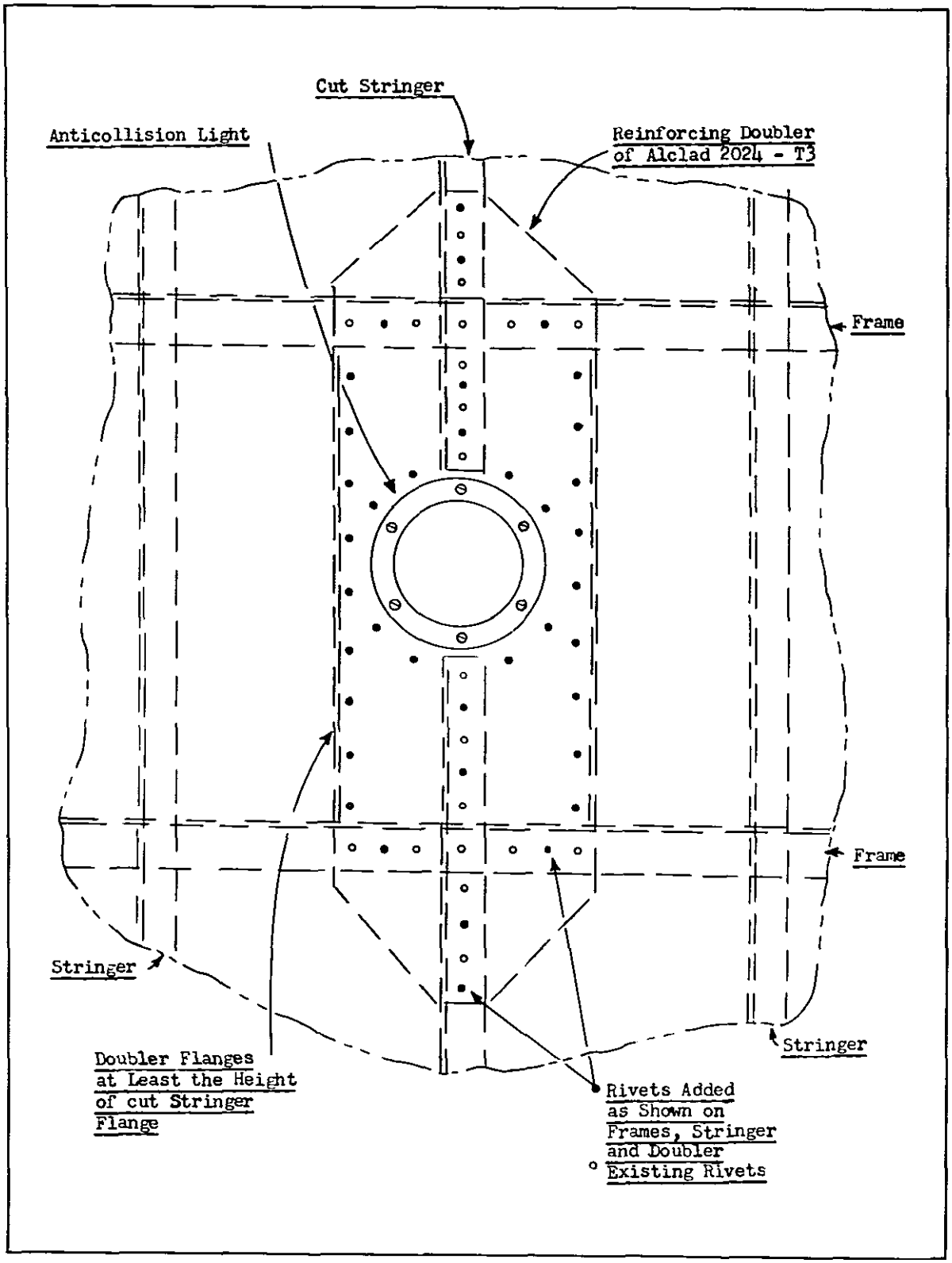

[FIGURE 12-3. Typical Anticollision Light Installation Involving a Cut Stringer.]

(Rev. 7/1/57)

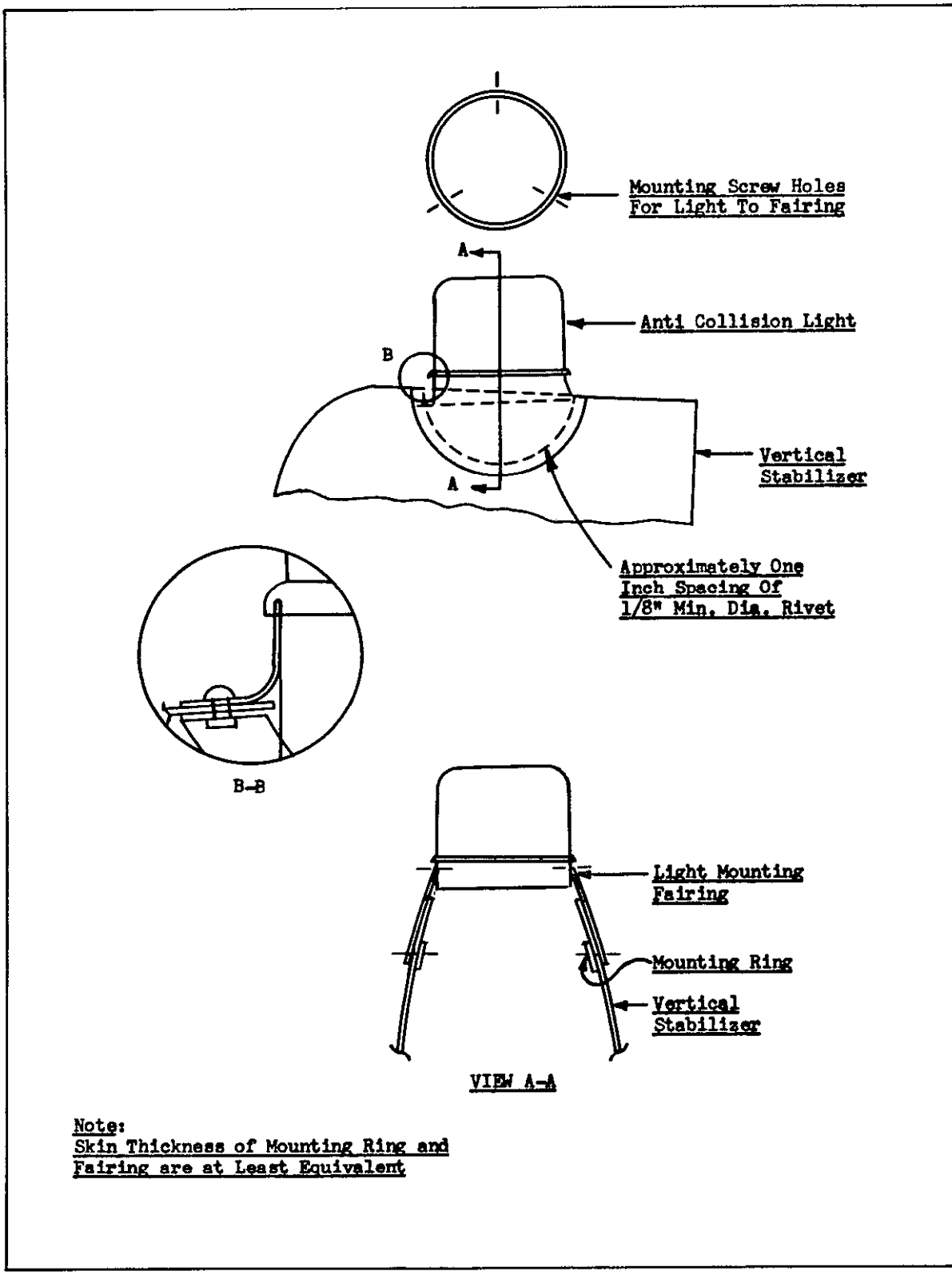

[FIGURE 12–4. Typical Anticollision Light Installation in a Fin Tip.]

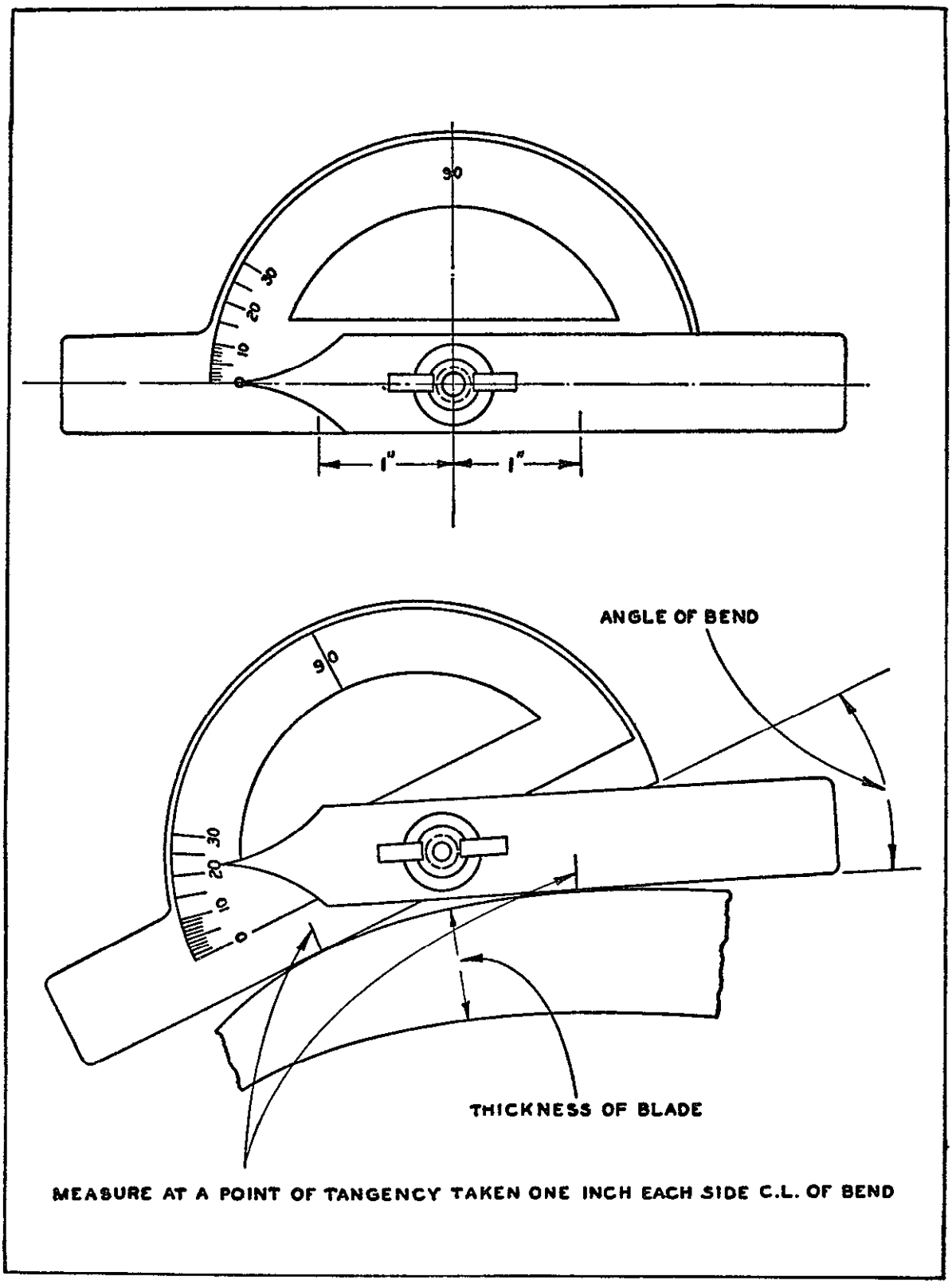

FIGURE 15–1. Protractor and Method of Measuring Angle of Bend in Aluminum-Alloy Propellers.

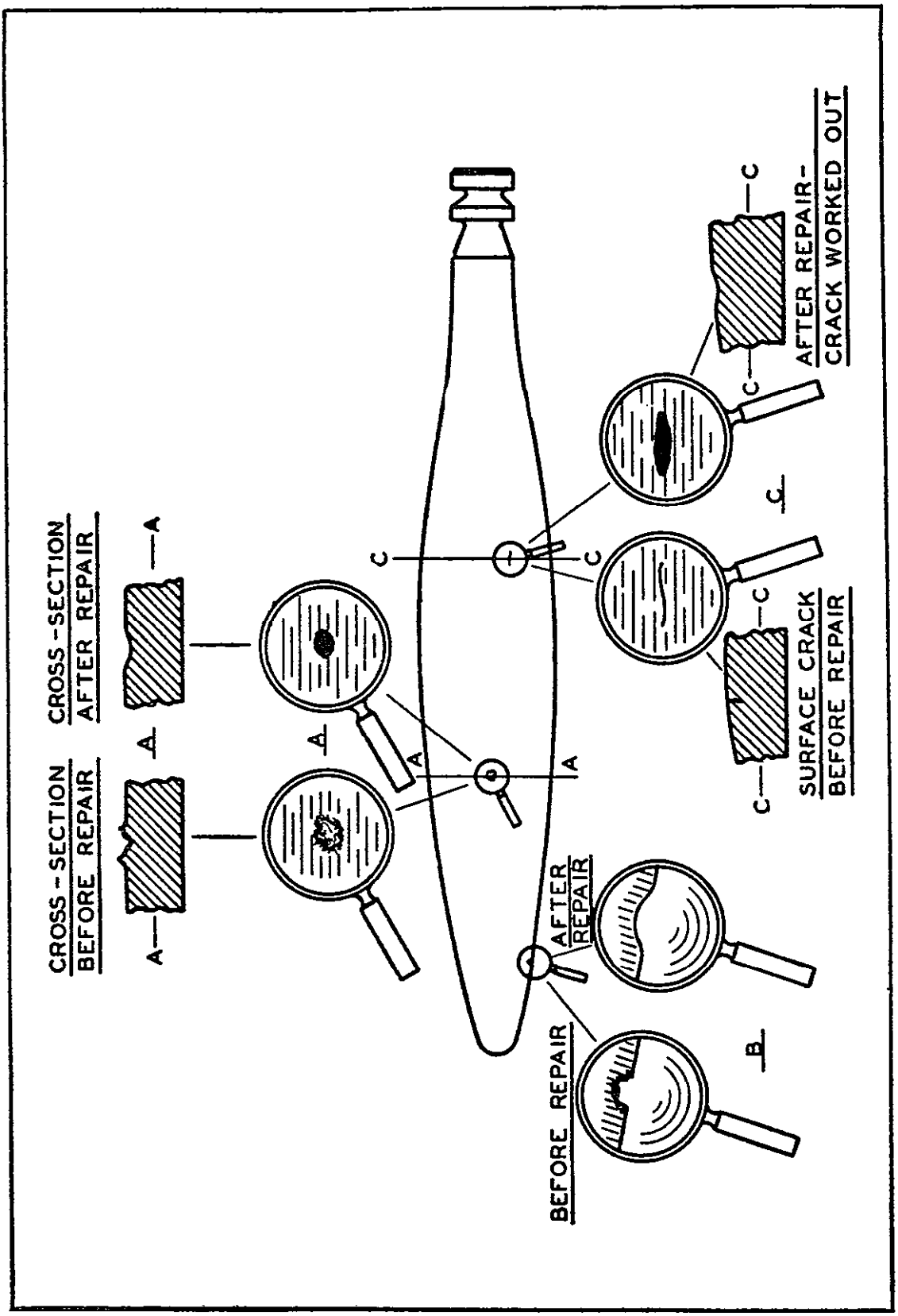

FIGURE 15-2. Method of Repairing Surface Cracks, Nicks, etc., on Aluminum Alloy Propellers.

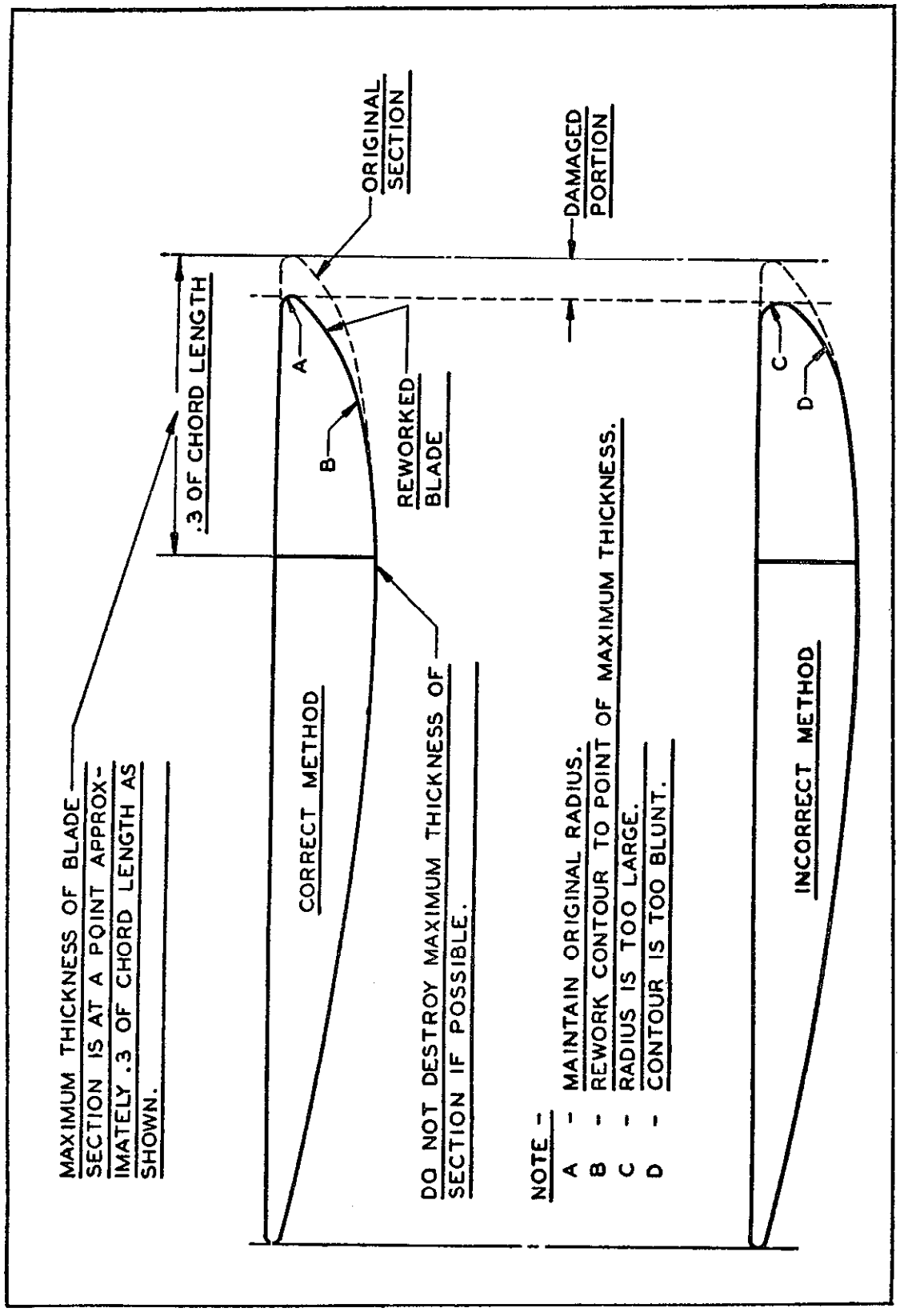

FIGURE 15-3. Correct and Incorrect Method of Reworking Leading Edge of Aluminum Alloy Propellers.

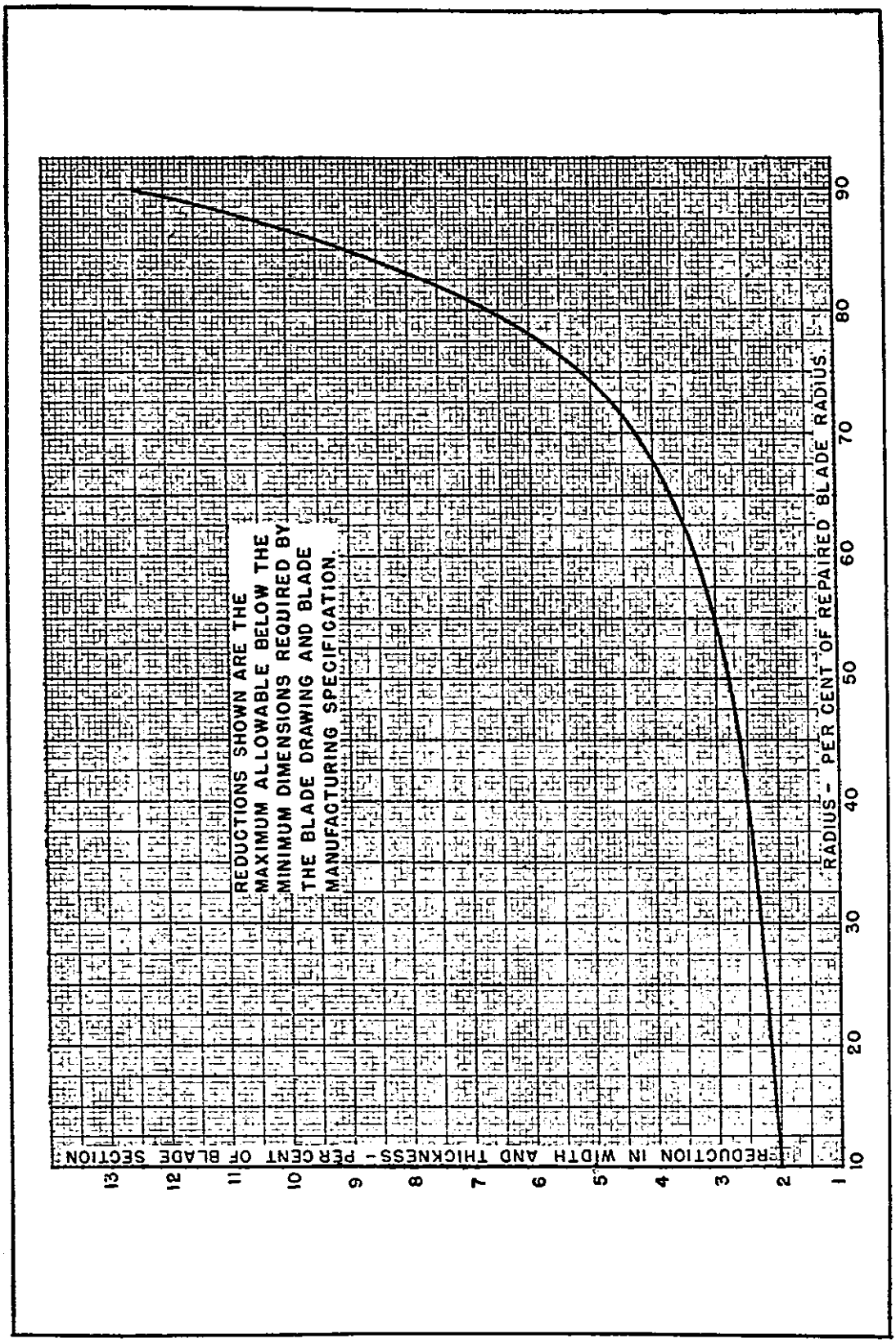

FIGURE 15-4. Repair Limits to Blade Section Width and Thickness for Aluminum Alloy Propellers.

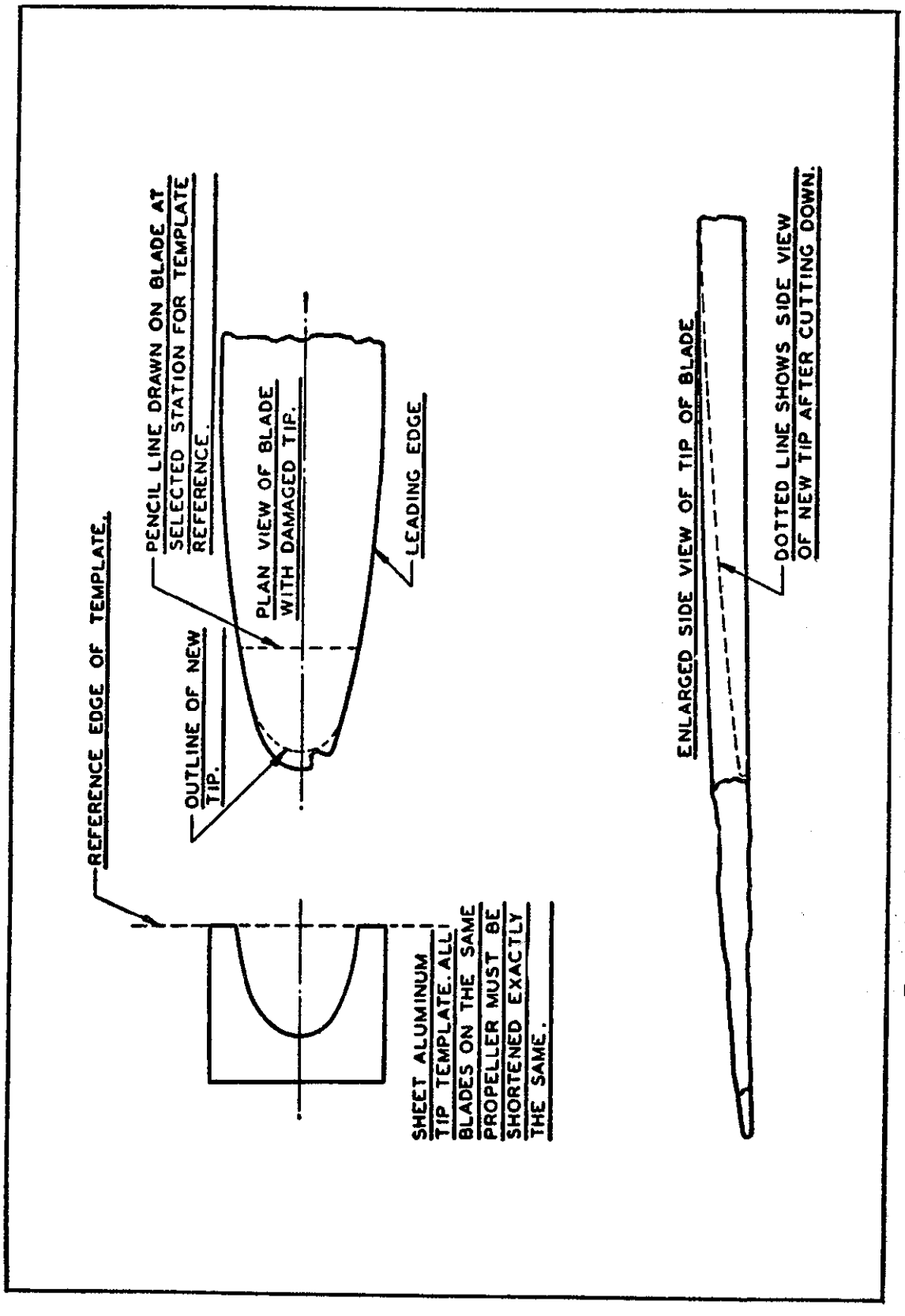

FIGURE 15-5. Method of Repairing Damaged Tip of Aluminum Alloy Propellers.

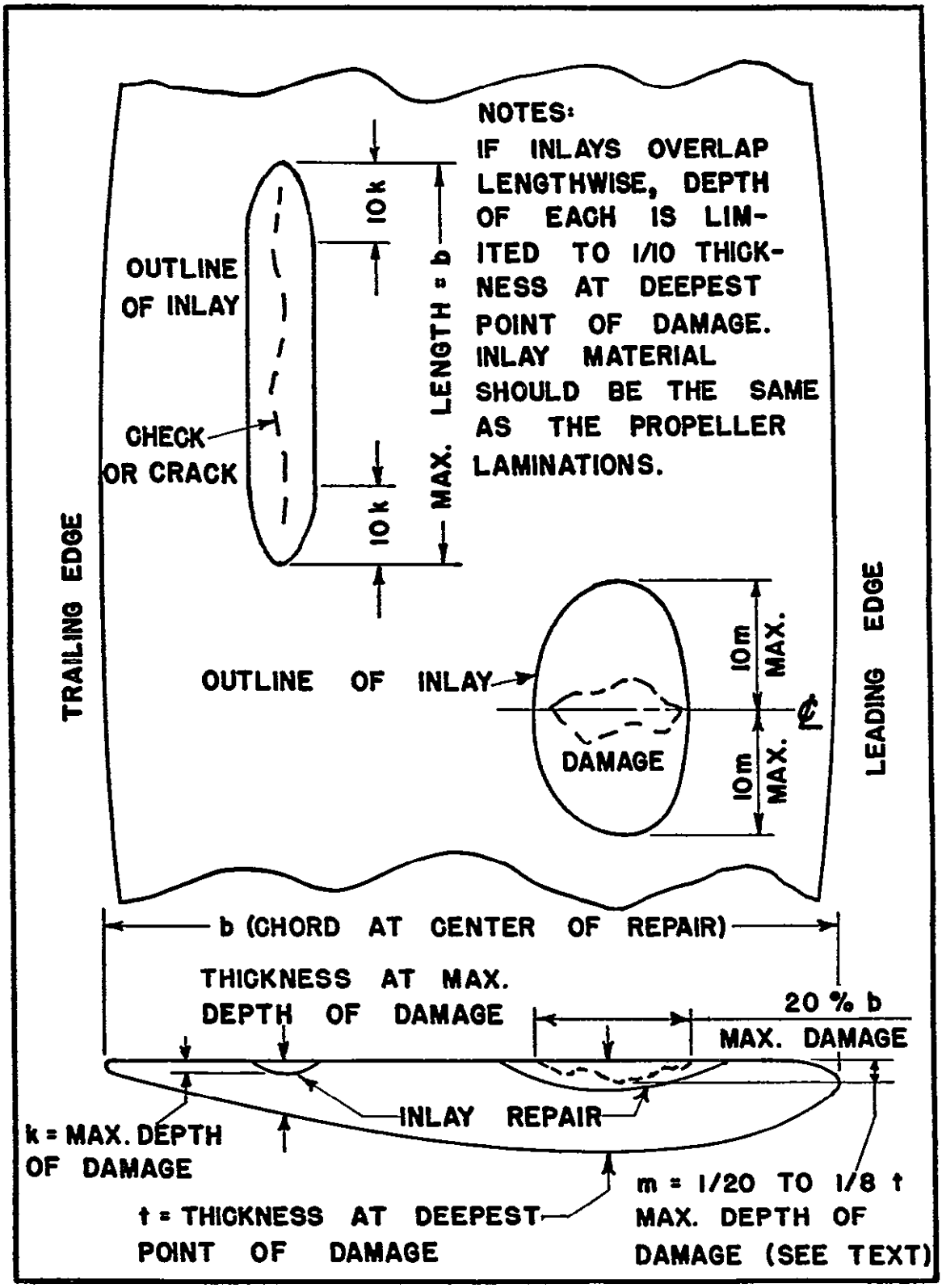

FIGURE 15-6. Propeller Repair by Addition of Small Inlay. (See continuations.)

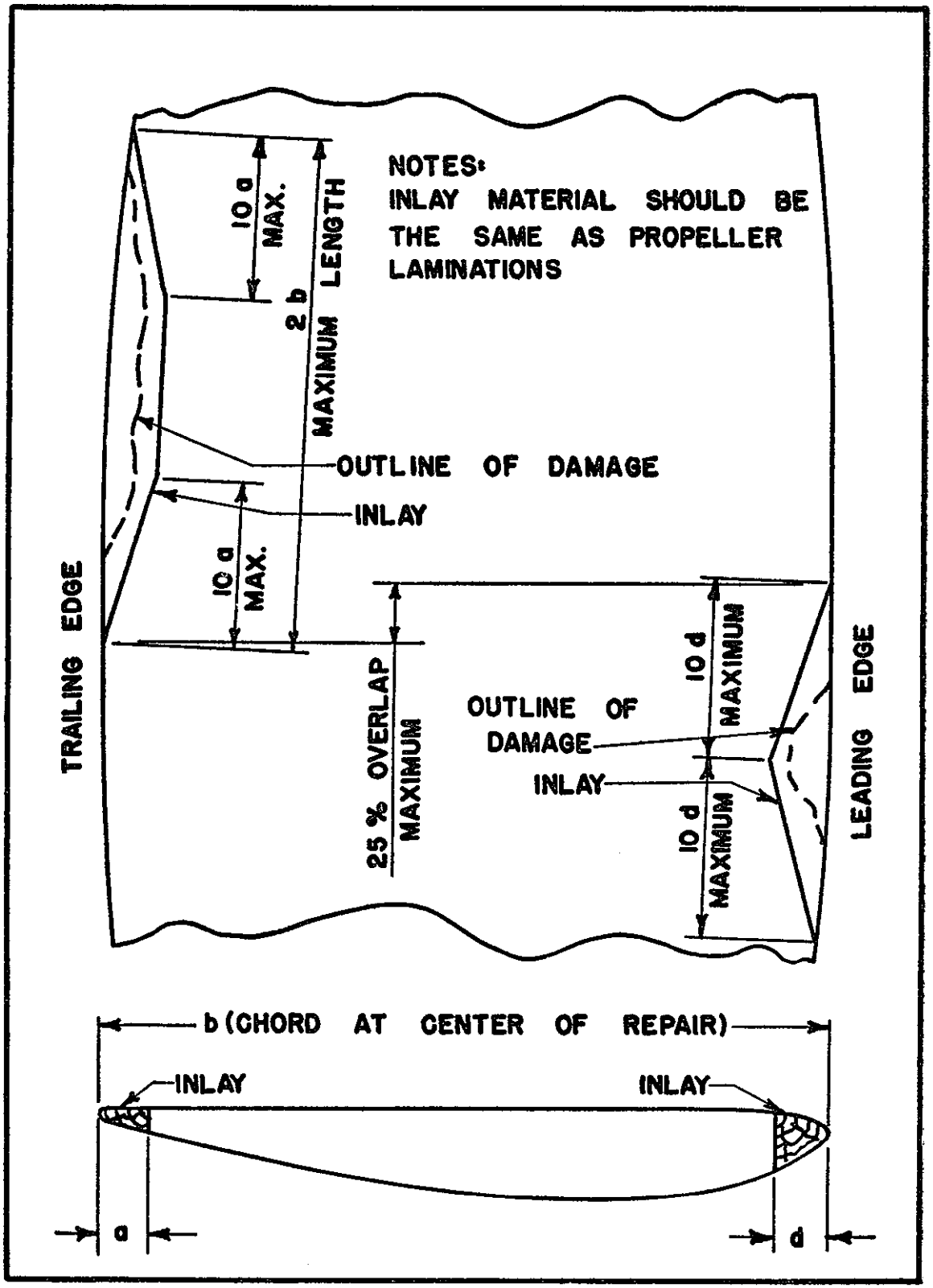

FIGURE 15–6 (continued). Propeller Repair by Addition of Small Inlay.

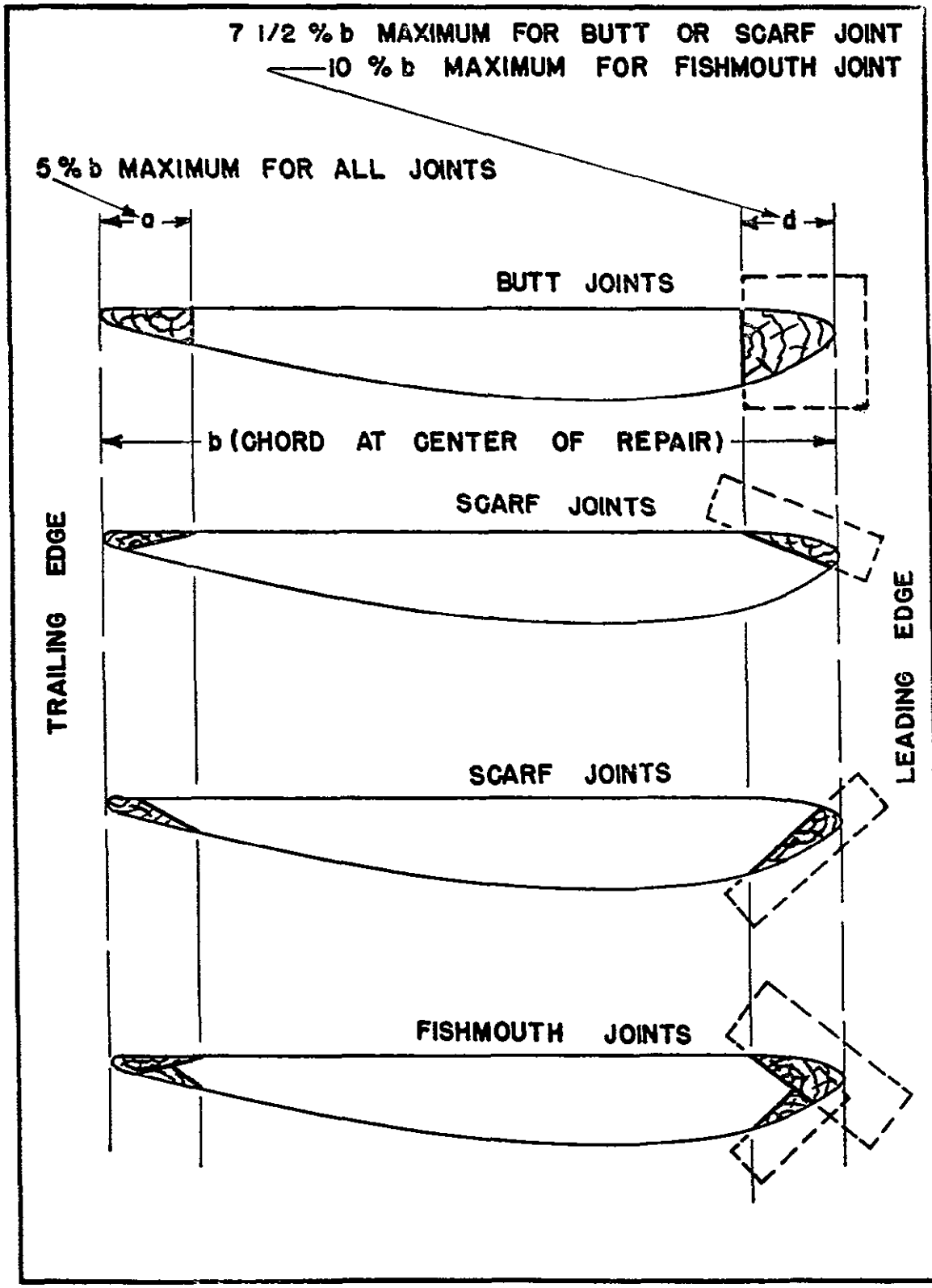

FIGURE 15–6 (continued). Propeller Repair by Addition of Small Inlay.

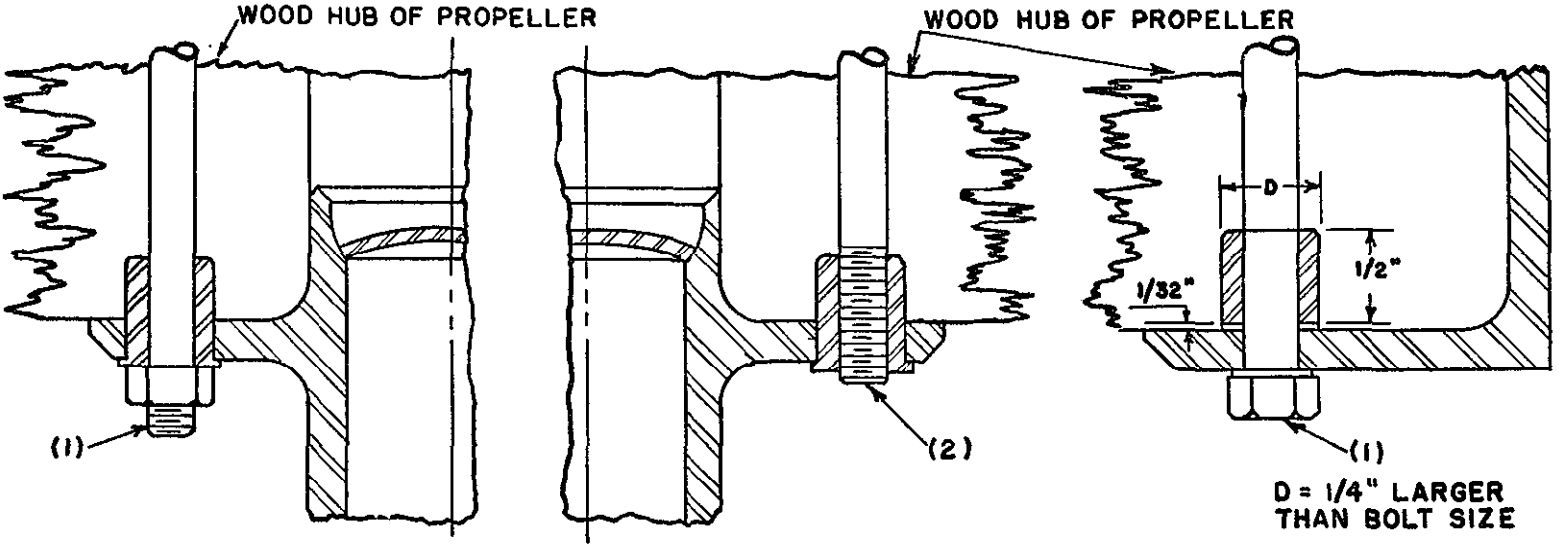

(1) DRILLED BOLT WITH CASTELATED NUT OR UNDRILLED BOLT WITH SELF-LOCKING NUT.

(2) BOLT WITH HEAD DRILLED FOR SAFETY WIRING.

NOTE: THESE REPAIRS ARE PERMITTED ONLY ON THE DRIVING FLANGE OF THE PROPELLER HUB AND THE ADJACENT FACE OF THE PROPELLER.

FIGURE 15-7. Repair of Fixed Pitch Hub and Propeller With Elongated or Damaged Bolt Holes.

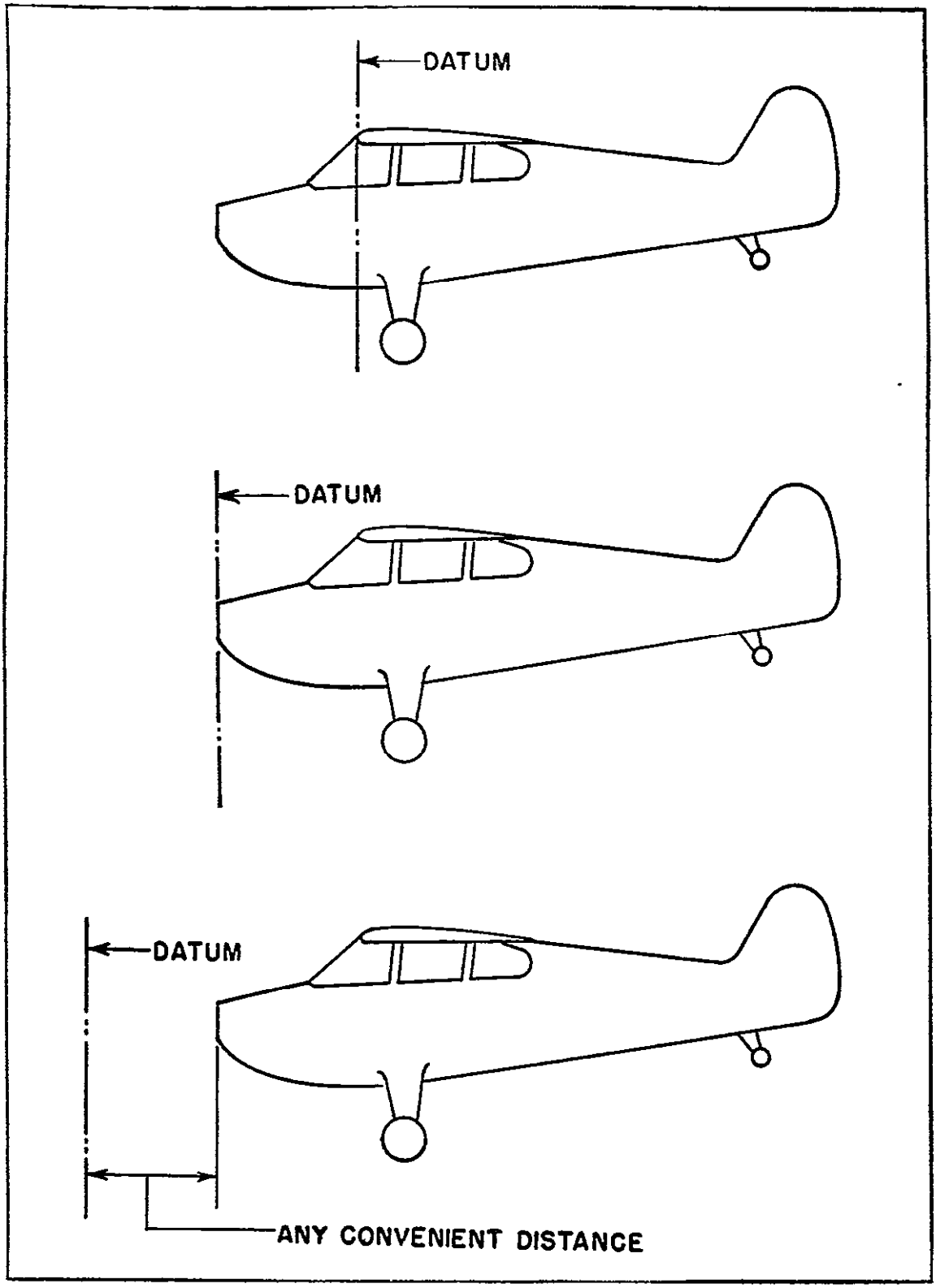

FIGURE 16-1. Typical Datum Locations.

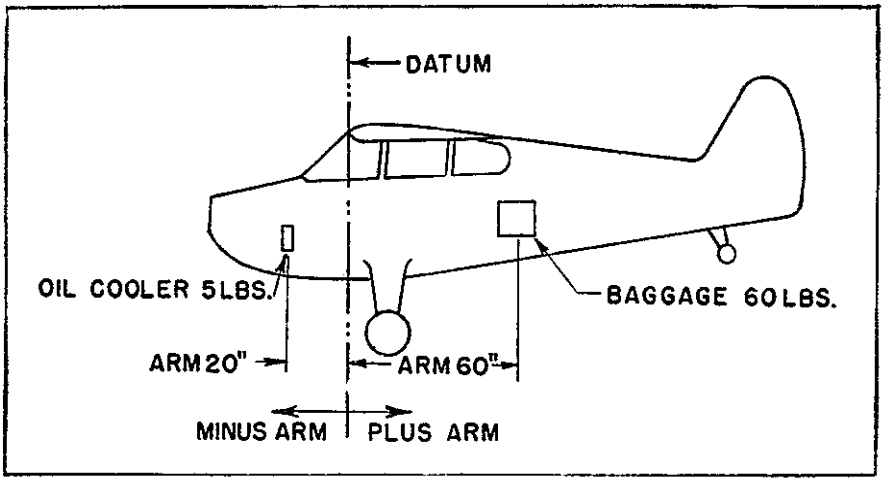

FIGURE 16-2. Illustration of Arm (or Moment Arm).

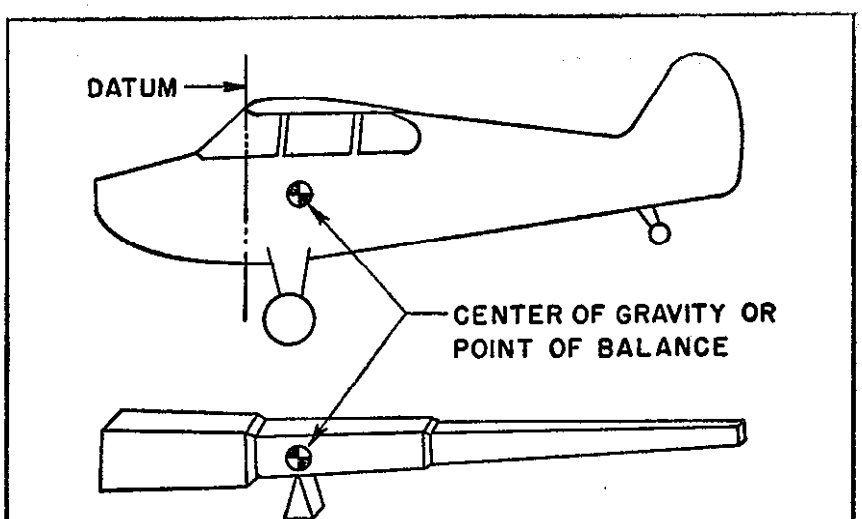

The entire aircraft weight may be considered to be concentrated at the center of gravity. Therefore, the moment of the aircraft about the datum is the weight of the aircraft times the horizontal distance between the C.G. and the datum.

Example: If the weight of this airplane is 2000 lbs. and the arm from the datum to the center of gravity is 16 inches, the moment of the aircraft about the datum is 2000 x 16 or 32,000 in. lbs.

FIGURE 16-3. Example of Moment Computation.

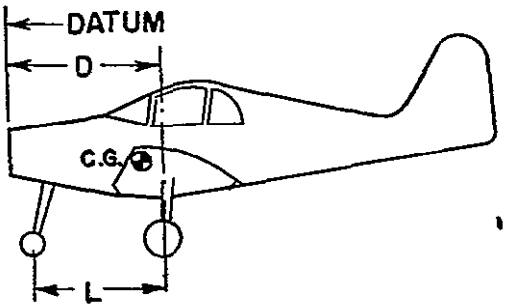

NOSE WHEEL TYPE AIRCRAFT

DATUM LOCATED FORWARD OF THE MAIN WHEELS

$$C.G. = D - \left(\frac{F \times L}{W}\right)$$

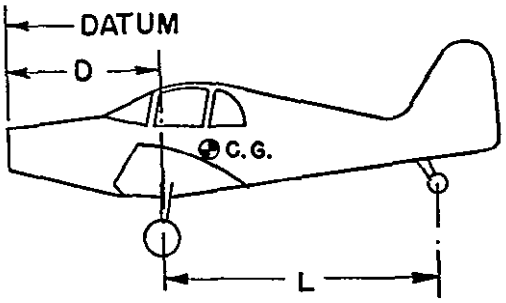

TAIL WHEEL TYPE AIRCRAFT

DATUM LOCATED FORWARD OF THE MAIN WHEELS

$$C.G. = D + \left(\frac{R \times L}{W}\right)$$

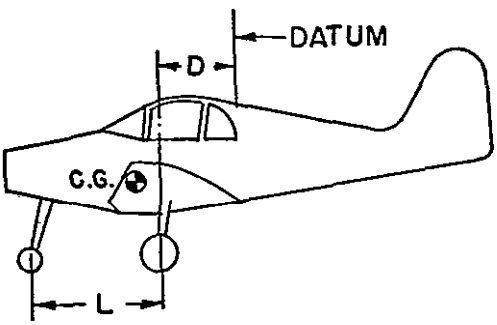

NOSE WHEEL TYPE AIRCRAFT

DATUM LOCATED AFT OF THE MAIN WHEELS

$$C.G. = -\left(D + \frac{F \times L}{W}\right)$$

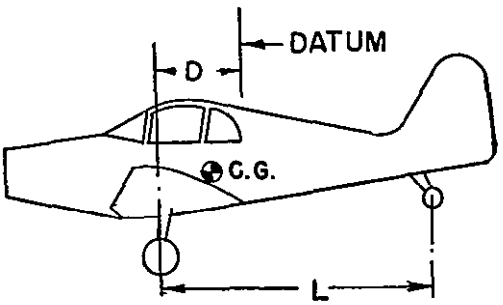

TAIL WHEEL TYPE AIRCRAFT

DATUM LOCATED AFT OF THE MAIN WHEELS

$$C.G. = -D + \left(\frac{R \times L}{W}\right)$$

CG = Distance from datum to center of gravity of the aircraft.
W = The weight of the aircraft at the time of weighing.
D = The horizontal distance measured from the datum to the main wheel weighing point.
L = The horizontal distance measured from the main wheel weighing point to the nose or tail weighing point.
F = The weight at the nose weighing point.
R = The weight at the tail weighing point.

FIGURE 16–4. Empty Weight Center-of-Gravity Formulas.

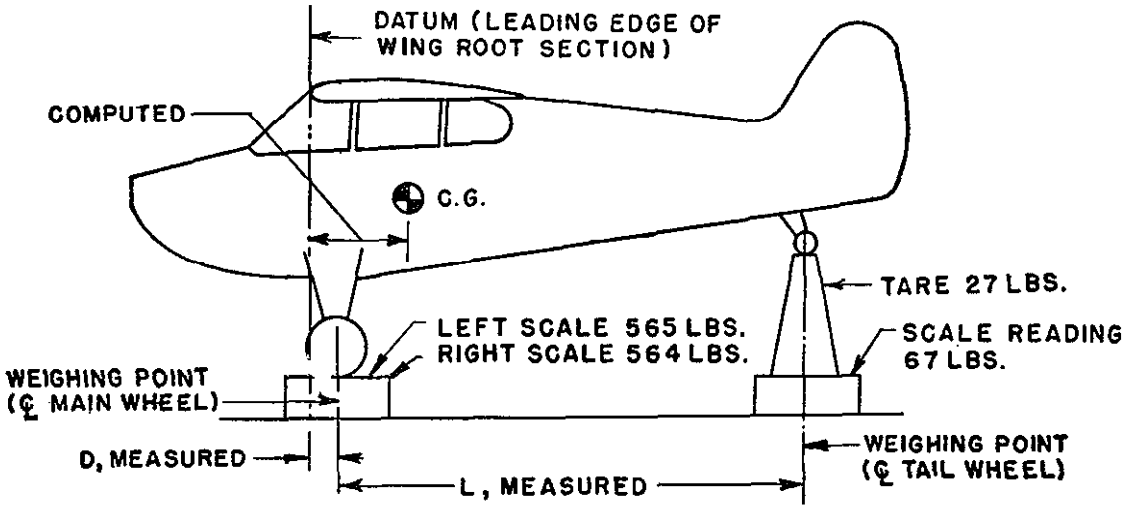

TO FIND: EMPTY WEIGHT AND EMPTY WEIGHT CENTER OF GRAVITY

Datum is the leading edge of the wing (from aircraft specification)
(D) Actual measured horizontal distance from the main wheel weighing point ℄ main wheel) to the Datum-------3"
(L) Actual measured horizontal distance from the rear wheel weighing point (℄ rear wheel) to the main wheel weighing point----------222"

SOLVING: EMPTY WEIGHT

Weighing Point	Scale Reading #	Tare #	Net Weight #
Right	564	0	564
Left	565	0	565
Rear	67	27	40
Empty Weight (W)			1169

SOLVING: EMPTY WEIGHT CENTER OF GRAVITY

Formula: $C.G. = D + \frac{R \times L}{W} = 3" + \frac{40 \times 222}{1169} = 3" + 7.6" = 10.6"$

Reference for formula Fig. 16-4

This case is shown properly entered on a sample weight and balance report form, Figure 16-17

FIGURE 16–5. Empty Weight and Empty Weight Center-of-Gravity—Tail-Wheel Type Aircraft.

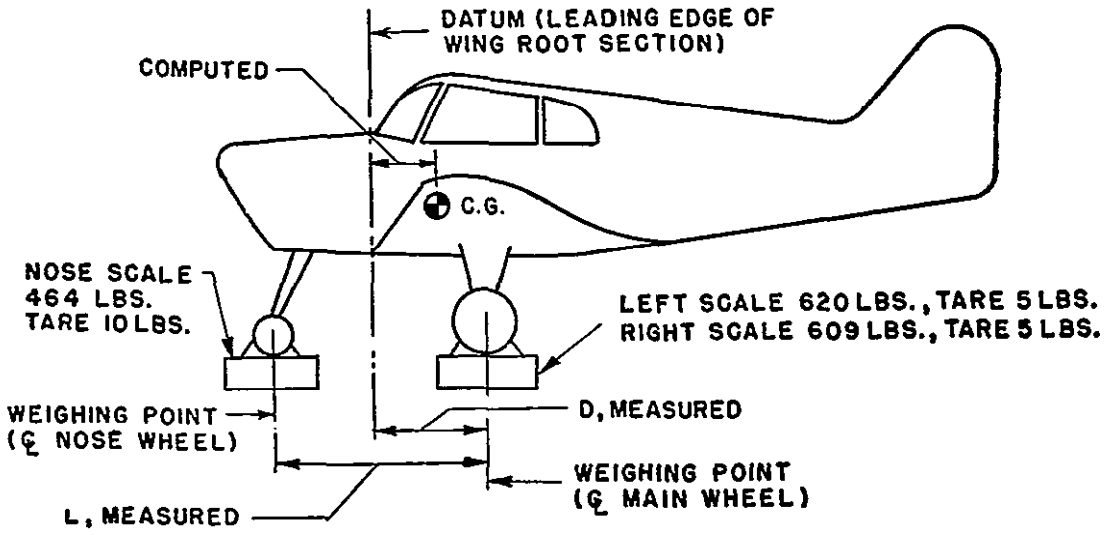

TO FIND: EMPTY WEIGHT AND EMPTY WEIGHT CENTER OF GRAVITY

Datum is the leading edge of the wing (from aircraft specification)
(D) Actual measured horizontal distance from the main wheel weight point (℄ main wheel) to the Datum------- 34.0"
(L) Actual measured horizontal distance from the front wheel weighing point (℄ front wheel) to the main wheel weighing point---------- 67.8"

SOLVING: EMPTY WEIGHT

Weighing Point	Scale Reading #	Tare #	Net Weight
Right	609	5	604
Left	620	5	615
Front	464	10	454
Empty Weight (W)			1673

SOLVING: EMPTY WEIGHT CENTER OF GRAVITY

Formula: $C.G. = D - \frac{F \times L}{W} = 34" - \frac{454 \times 67.8}{1673} = 34" - 18.3" = 15.7"$

Reference for formula Fig. 16-4

FIGURE 16-6. Empty Weight and Empty Weight Center-of-Gravity—Nose-Wheel Type Aircraft.

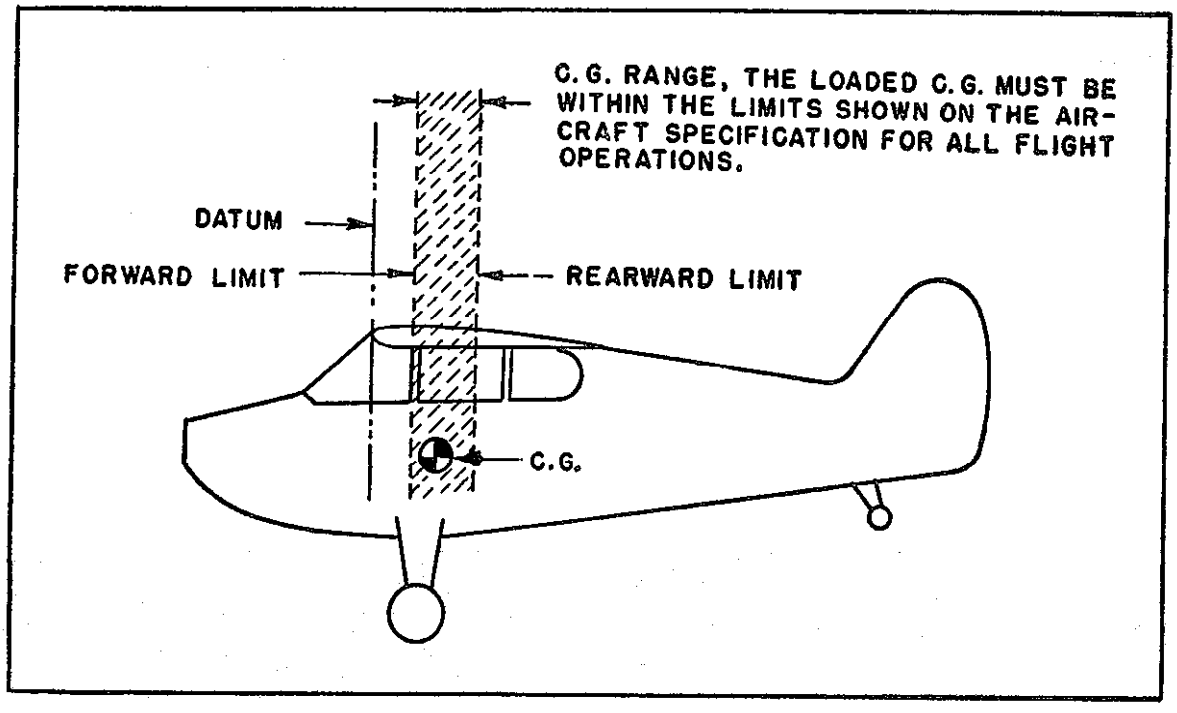

FIGURE 16–7. Operating Center-of-Gravity Range.

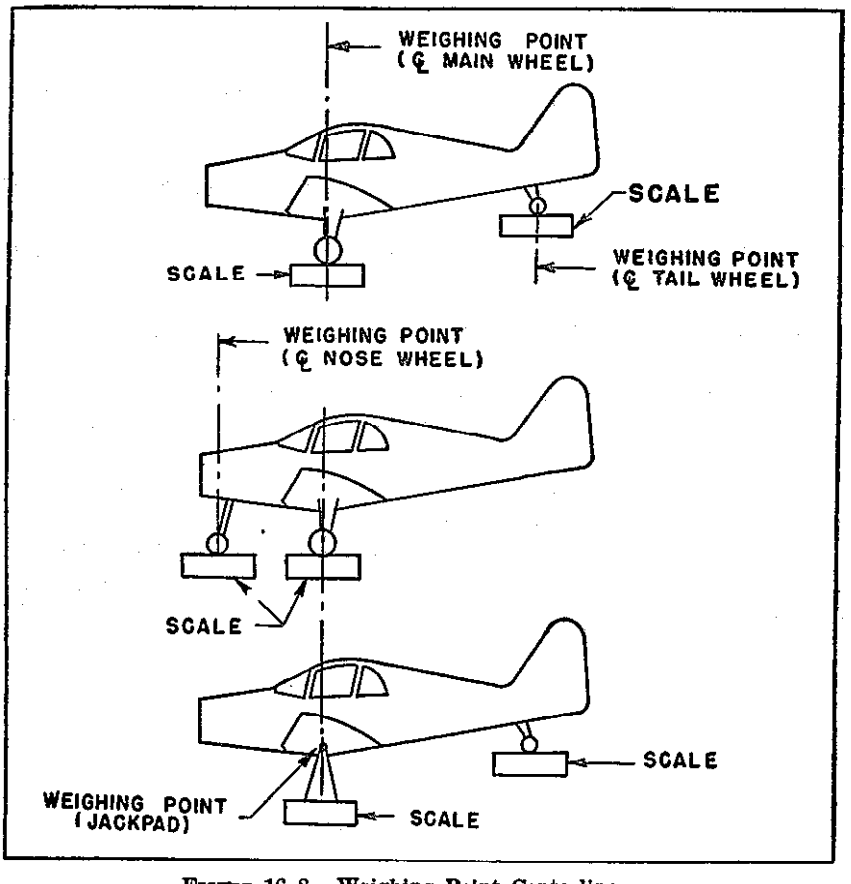

FIGURE 16–8. Weighing Point Centerline.

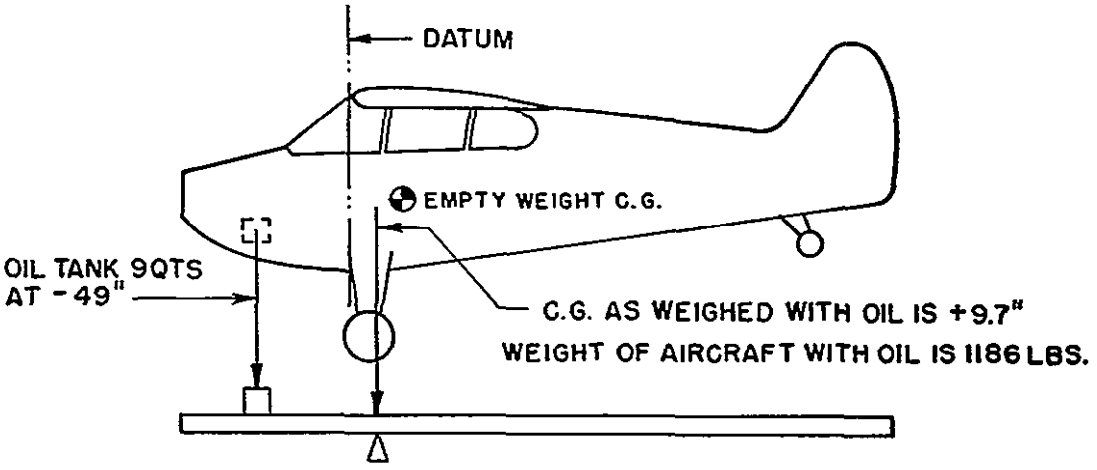

EMPTY WEIGHT AND EMPTY WEIGHT CENTER OF GRAVITY
(when aircraft is weighed with oil)

GIVEN:

Aircraft as weighed with full oil------ 1186 lbs.
Center of gravity---------- 9.7"
Full oil capacity 9 qts.---------- 17 lbs.

SOLVING:

	Weight # x	Arm"	Moment "#
Aircraft as weighed	+ 1186	+ 9.7	+ 11504
Less oil	- 17	- 49.0	+ 833
Total	+ 1169(A)		+ 12337(B)

Empty Weight (A) = 1169 pounds.

Empty Weight Center of Gravity $\frac{B}{A} = \frac{12337}{1169} = +10.6"$

FIGURE 16–9. Empty Weight and Empty Weight Center-of-Gravity When Aircraft Is Weighed With Oil.

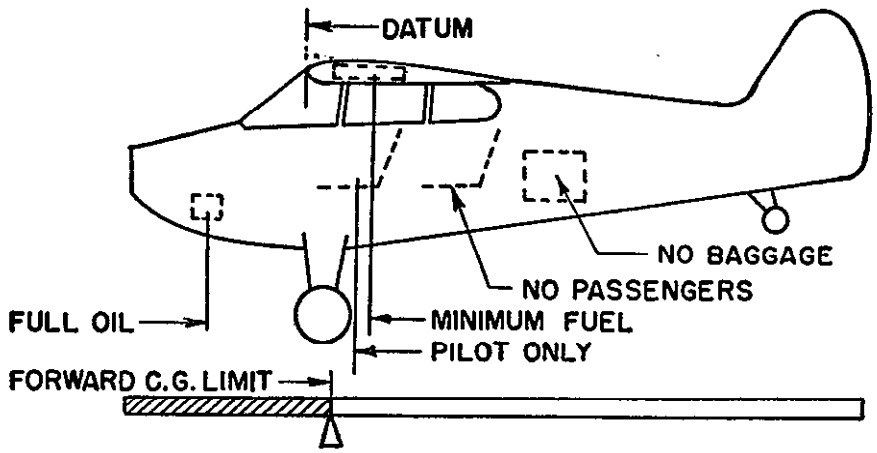

TO CHECK: MOST FORWARD WEIGHT AND BALANCE EXTREME.

GIVEN: Actual empty weight of the airplane---------- 1169#
Empty weight center of gravity ---------- +10.6"
*Maximum weight ---------- 2100#
*Forward C.G. limit ---------- + 8.5"
*Oil, capacity 9 qts. ---------- 17# at - 49
*Pilot in farthest forward seat equipped with controls (unless otherwise placarded) ---------- 170# at + 16"
*Since the fuel tank is located to the rear of the forward C.G. limit, minimum fuel should be included. $\frac{\text{METO HP}}{12} = \frac{165}{12} = 13.75$ gal. x 6# ------- 83# at + 22"

*Information should be obtained from the aircraft specification.

Note: Any items or passengers must be used if they are located ahead of the forward C.G. limit.
Full fuel must be used if the tank is located ahead of the forward C.G. limit.

CHECK OF FORWARD WEIGHT AND BALANCE EXTREME

	Weight (#)	x Arm (")	Moment ("#)
Aircraft Empty	+ 1169	+ 10.6	+ 12391
Oil	+ 17	- 49	- 833
Pilot	+ 170	+ 16	+ 2720
Fuel	+ 83	+ 22	+ 1826
Total	+ 1439 (TW)		+ 16104 (TM)

Divide the TM (Total Moment) by the TW (Total Weight) to obtain the forward weight and balance extreme.

$\frac{TM}{TW} = \frac{16104}{1439} = +\ 11.2"$

Since the forward C.G. limit and the maximum weight are not exceeded, the forward weight and balance extreme condition is satisfactory.

FIGURE 16–10. Example of Check of Most Forward Weight and Balance Extreme.

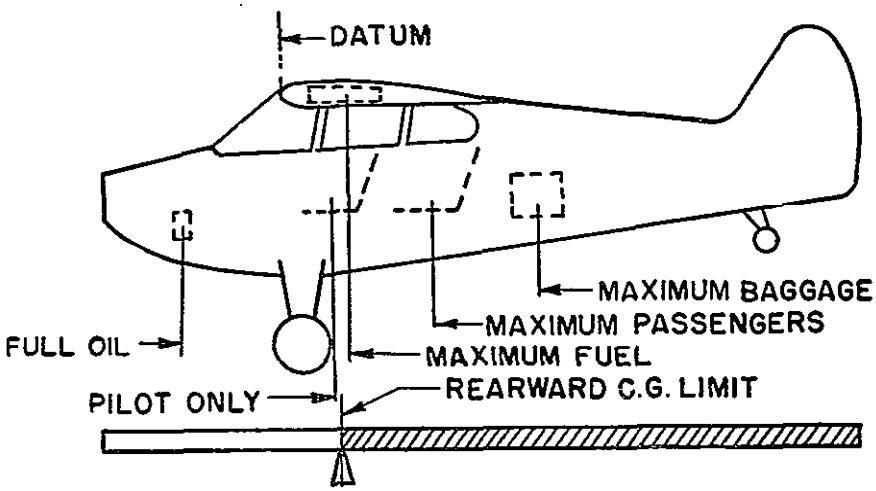

TO CHECK: MOST REARWARD WEIGHT AND BALANCE EXTREME.

GIVEN:

Actual empty weight of the airplane	1169#
Empty weight center of gravity	10.6"
*Maximum weight	2100#
*Rearward C.G. limit	21.9"
*Oil capacity 9 qts.	17# at - 49"
*Baggage, placarded do not exceed 100 lbs.	100# at + 75.5"
*Two passengers in rear seats, 170 x 2	340# at + 48"
*Pilot in most rearward seat equipped with controls (unless otherwise placarded)	170# at + 16"
*Since the fuel tank is located aft of the rearward C.G. limit full fuel must be used	240# at + 22"

* Information should be obtained from the aircraft specification.

Note: If fuel tanks are located ahead of the rearward C.G. limit minimum fuel should be used.

CHECK OF REARWARD WEIGHT AND BALANCE EXTREME

	Weight (#)	x Arm (")	= Moment ("#)
Aircraft empty	+ 1169	+ 10.6	+ 12391
Oil	+ 17	- 49	- 833
Pilot (1)	+ 170	+ 16	+ 2720
Passengers (2)	+ 340	+ 48	+ 16320
Fuel (40 gals.)	+ 240	+ 22	+ 5280
Baggage	+ 100	+ 75.5	+ 7550
Total	+2036 (TW)		+ 43428 (TM)

Divide the TM (Total Moment) by the TW (Total Weight) to obtain the rearward weight and balance extreme.

$$\frac{TM}{TW} = \frac{43428}{2036} = +21.3"$$

Since the rearward C.G. limit and the maximum weight are not exceeded, the rearward weight and balance extreme condition is satisfactory.

FIGURE 16-11. Example of Check of Most Rearward Weight and Balance Extreme.

EXAMPLE OF THE DETERMINATION OF THE NUMBER OF PASSENGERS AND BAGGAGE PERMISSIBLE WITH FULL FUEL

GIVEN:

Actual empty weight of the aircraft	1169#
Empty weight center of gravity	10.6"
Maximum weight	2100#
Datum is leading edge of the wing	
Forward center of gravity limit	8.5"
Rearward center of gravity limit	21.9"
Oil capacity, 9 qts.; show full capacity	17# at -49"
Baggage, maximum	100# at +75.5"
Two passengers in rear seat, 170# x 2	340# at +48"
Pilot in most rearward seat equipped with controls (unless otherwise placarded)	170# at +16"
Full fuel, 40 gals. x 6#	240# at +22"

	Weight(#)	x Arm(")	= Moment("#)
Aircraft empty	+ 1169	+10.6	+ 12391
Oil	+ 17	- 49	- 833
Full fuel	+ 240	+ 22	+ 5280
Passengers, 2 rear	+ 340 *	+ 48	+ 16320
Pilot	+ 170	+ 16	+ 2720
Baggage	+ 100	+ 75.5	+ 7550
Total	+ 2036 (TW)		+ 43428 (TM)

Divide the TM (total moment) by the TW (total weight) to obtain the loaded center of gravity.

$$\frac{TM}{TW} = \frac{43428}{2036} = +21.3"$$

The above computations show that with full fuel, 100 pounds of baggage and two passengers in the rear seat may be carried in this aircraft without exceeding either the maximum weight or the approved C.G. range.

This condition may be entered in the loading schedule as follows:

GALLONS OF FUEL	NUMBER OF PASSENGERS	POUNDS OF BAGGAGE
Full	2 Rear	100

* Only two passengers are listed to prevent the maximum weight of 2100 lbs. from being exceeded.

FIGURE 16-12. Loading Conditions: Determination of the Number of Passengers and Baggage Permissible With Full Fuel.

EXAMPLE OF THE DETERMINATION OF THE POUNDS OF FUEL AND BAGGAGE PERMISSIBLE WITH MAXIMUM PASSENGERS

	Weight (#)	x Arm (")	= Moment ("#)
Aircraft empty	+ 1169	+ 10.6	+ 12391
Oil	+ 17	- 49	- 833
Pilot	+ 170	+ 16	+ 2720
Passenger, 1 front	+ 170	+ 16	+ 2720
Passengers, 2 rear	+ 340	+ 48	+ 16320
Fuel (39 gals.)	+ 234	+ 22	+ 5148
Baggage	---	---	---
Total	+ 2100		+ 38466

Divide the TM (total moment) by the TW (total weight) to obtain the loaded center of gravity.

$$\frac{TM}{TW} = \frac{38466}{2100} = + 18.3"$$

The above computations show that with the maximum number of passengers, 39 gallons of fuel and zero pounds of baggage may be carried in this aircraft without exceeding either the maximum weight or the approved C.G. range.

This condition may be entered in the loading schedule as follows:

GALLONS OF FUEL	NUMBER OF PASSENGERS	POUNDS OF BAGGAGE
* FULL	*2 rear	* 100
39	1(F) 2(R)	None

* Conditions as entered from Figure 16-12
(F) Front seat
(R) Rear seat

FIGURE 16-13. Loading Conditions: Determination of the Fuel and Baggage Permissible With Maximum Passengers.

EXAMPLE OF THE DETERMINATION OF THE FUEL AND THE NUMBER AND LOCATION OF PASSENGERS PERMISSIBLE WITH MAXIMUM BAGGAGE

	Weight (#)	x Arm ('')	= Moment ('#)
Aircraft empty	+ 1169	+ 10.6	+ 12391
Oil	+ 17	- 49	- 833
Pilot	+ 170	+ 16	+ 2720
Passenger (1) rear	+ 170	+ 48	+ 8160
Passenger (1) front	+ 170	+ 16	+ 2720
Fuel (40 gals.)	+ 240	+ 22	+ 5280
Baggage	+ 100	+ 75.5	+ 7550
Total	+ 2036		+ 37988

Divide the TM (total moment) by the TW (total weight) to obtain the loaded center of gravity.

$$\frac{TM}{TW} = \frac{37988}{2036} = + 18.7$$

The above computations show that with maximum baggage, full fuel and 2 passengers (1 in the front seat and 1 in the rear seat) may be carried in this aircraft without exceeding either the maximum weight or the approved C.G. range.

This condition may be entered in the loading schedule as follows:

GALLONS OF FUEL	NUMBER OF PASSENGERS	POUNDS OF BAGGAGE
* Full	* 2 Rear	*100
** 39	*1(F) 2(R)	**None
Full	1(F) 1(R)	Full

*Conditions as entered from Figure 16-12
**Conditions as entered from Figure 16-13
(F) Front seat
(R) Rear seat

FIGURE 16-14. Loading Conditions: Determination of the Fuel and the Number and Location of Passenger Permissible With Maximum Baggage.

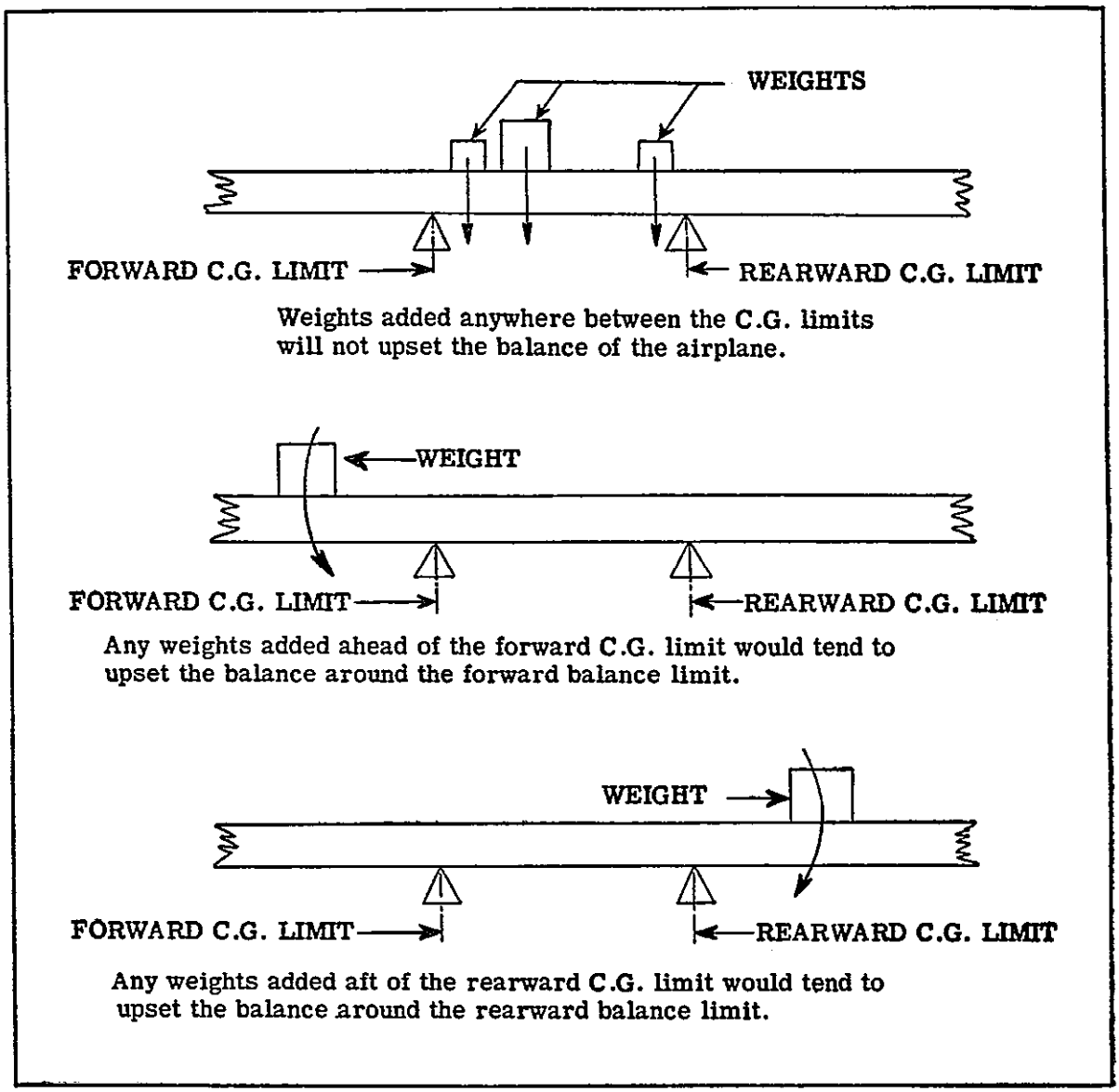

FIGURE 16–15. Effects of the Addition of Equipment Items on Balance.

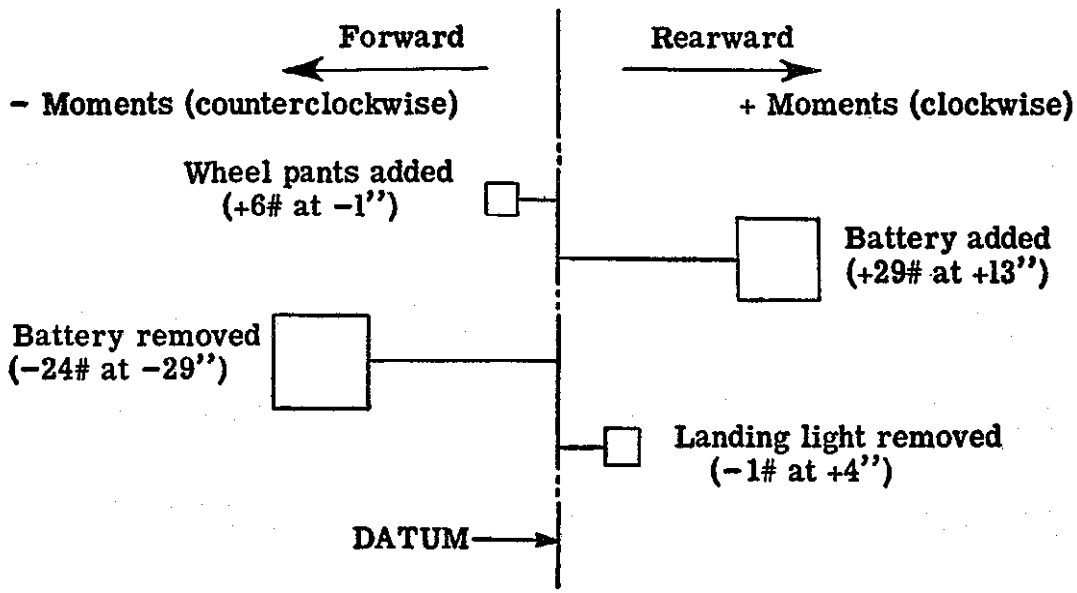

	Weight (#)	x Arm (")	= Moment ("#)
ADDED			
Item 204 wheel pants	+ 6	− 1	− 6
Item 302b Battery	+ 29	+13	+377
REMOVED			
Item 302a Battery	− 24	−29	+696
Item 303 Landing light	− 1	+ 4	− 4

This condition is shown properly entered on a sample weight and balance report on Figure 16-18 under Equipment Change.

FIGURE 16-16. Example of Moment and Weight Changes Resulting From Equipment Changes.

MAKE MA-700 MODEL A' SERIAL # 0000 REGISTRATION # N1234
DATUM IS leading edge of wing.

COMPUTE AS FOLLOWS IF AIRCRAFT WEIGHED

1. Leveling means: level top longeron between front and rear seats.
2. Main wheel weighing point is located (_____"FORWARD)(+ 3 " AFT) of datum.
3. Actual measured distance from the main weight point centerline to the tail (or nose) point centerline 222 ".
4. Oil over and above "ZERO" tank reading = (a.__ Gals.)(b.__ Lbs.)(c.__ In.)

ACTUAL EMPTY WEIGHT

	Weight Point	Scale Reading	- Tare	= Net Weight
5.	Right	564	0	564
6.	Left	565	0	565
7.	Tail	67	27	40
8.	Nose	—	—	—
9.	Total Net Weight			1169

CENTER OF GRAVITY AS WEIGHED

10. C.G. relative to main wheel weighing point:
(a) Tail wheel airc. $\frac{\text{(item 3, 222)}}{\text{(Item 9, 1169)}} \times \text{(Item 7, 40)} = +\ 7.6 = \text{C.G.}$

(b) Nose wheel airc. $\frac{\text{(Item 3 —)}}{\text{(Item 9 —)}} \times \text{(Item 8 —)} = \text{\_\_\_\_\_} = \text{C.G.}$

11. C.G. relative to datum:
(a) Tail wheel airc. (Item 10a, + 7.6) added to (Item 2, + 3) = + 10.6" = C.G.
(b) Nose wheel airc. (Item 10b, _____) added to (Item 2, _____) = _____ = C.G.

COMPUTE IF AIRCRAFT WEIGHED WITH OIL (Item 4)

	Weight	X	Arm	=	Moment
Aircraft Less Oil	(9) (4b)		(11) (4c)		
Empty Totals	(a)				(b)

12. (a) (b)_____ = (c)_____" = Empty weight C.G.

REPAIR AGENCY _____ _____ DATE _____
Name Number

FIGURE 16-17. Sample Weight and Balance Report to Determine Empty Weight Center-of-Gravity.

EQUIPMENT LIST

*Required or Optional Item Numbers as Shown in Aircraft Specification						
1	2	101	102	103	104	105
106	201	202	203	301	302(a)	303
401(a)	402	—	—	—	—	—

Special Equipment

Item	Make	Model	Weight	Arm
3 Flares 1½ Min.	XYZ	03	25#	150"

Enter above those items included in the empty weight.

WEIGHT AND BALANCE EXTREME CONDITIONS

Approved fwd. limit 8.5" Approved max. weight 2100# Approved aft limit 21.9"

Item	FORWARD CHECK Weight	X Arm	= Moment	REARWARD CHECK Weight	X Arm	= Moment
Airc. Empty	+ 1169 (9 or 12a)	+ 10.6 (11 or 12c)	+ 12391	+ 1169 (9 or 12a)	+ 10.6 (11 or 12c)	+ 12391
Oil	+ 17	- 49	- 833	+ 17	- 49	- 833
Pilot	+ 170	+ 16	+ 2720	+ 170	+ 16	+ 2720
Fuel	+ 83	+ 22	+ 1826	+ 240	+ 22	+ 5280
Passenger(s)				+ 340	+ 48	+ 16320
Baggage				+ 100	+ 75.5	+ 7550
TOTAL	+ 1439= TW		+ 16104= TM	+ 2036=TW		+ 43428=TM

$\frac{TM}{TW} = \frac{16104}{1439} = +11.2" =$ Most Forward C.G. location

$\frac{TM}{TW} = \frac{43428}{2036} = +21.3" =$ Most rearward C.G. location

LOADING SCHEDULE

Gallons of Fuel	Number of Passengers	Pounds of Baggage
40	2(R)	100

The above includes pilot and capacity oil.

EQUIPMENT CHANGE

Computing New C.G.

Item, Make, and Model*	Weight	X Arm	= Moment
Airc. Empty	+ 1169 (9 or 12a)	+ 10.6 (11 or 12c)	+ 12391
204 added	+ 6	- 1	- 6
302(b) added	+ 29	+ 13	+ 377
302(a) removed	- 24	- 29	+ 696
303 removed	- 1	+ 4	- 4
NET TOTALS	- 1179 = NW		+ 13454 = NM

$\frac{NM}{NW} = \frac{13454}{1179} = +11.4"$ = New C.G.

*ITEM NUMBERS WHEN LISTED IN PERTINENT AIRCRAFT SPECIFICATION MAY BE USED IN LIEU OF "ITEM, MAKE, AND MODEL".

APPROVED BY _____ DATE _____

FIGURE 16-18. Sample Weight and Balance Report Including an Equipment Change for Aircraft Fully Loaded.

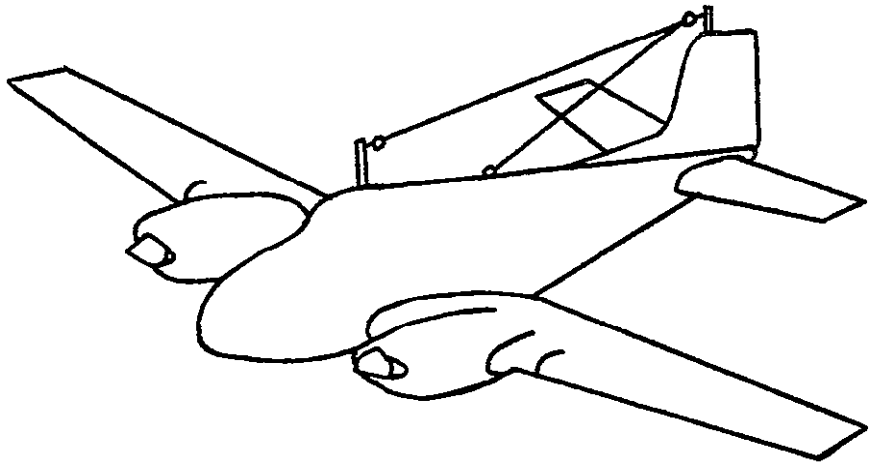

Vertical "V" Antenna

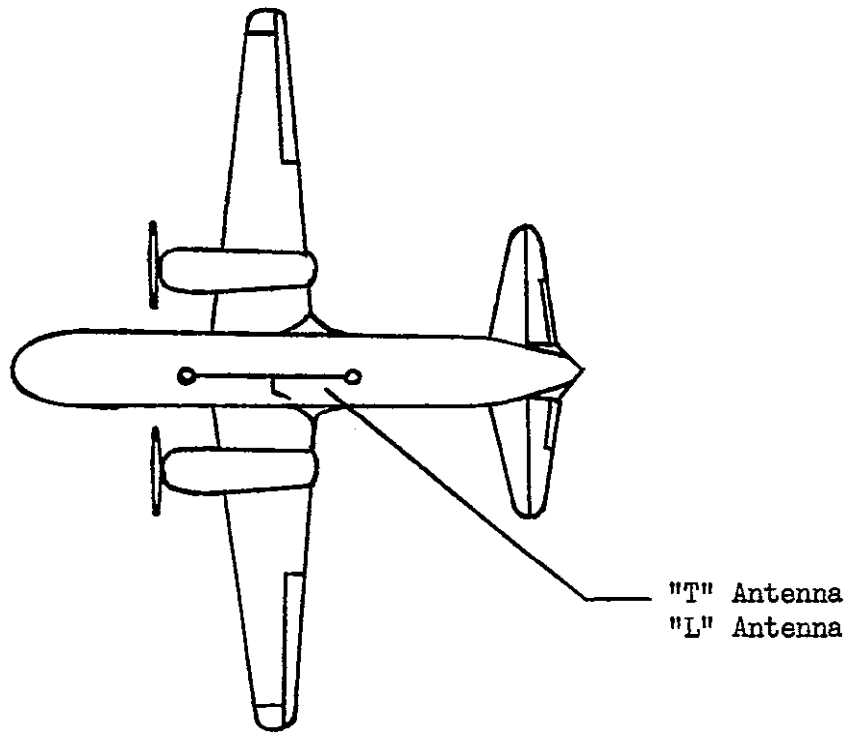

NOTE: An "L" type antenna is similar to a "T" antenna except that the lead-in wire is connected to the end of the antenna instead of the center.

Figure 22-1.—"L," "T," and "V" Type Antenna.

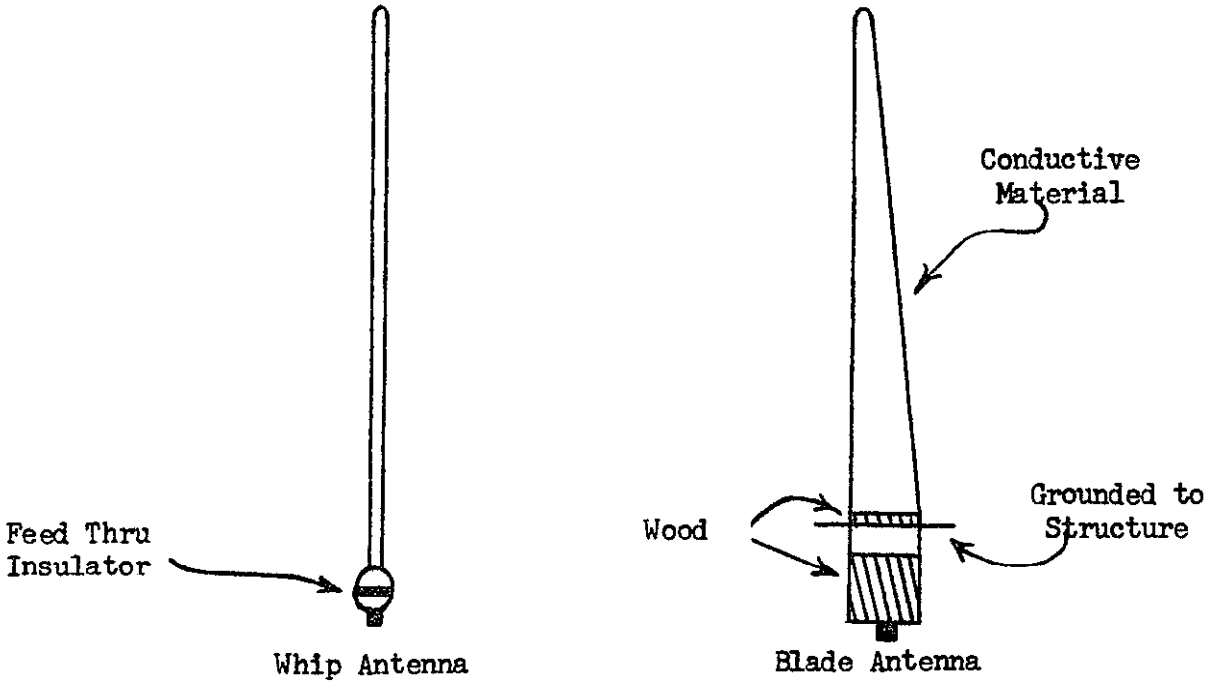

Figure 22-2.—Whip and Blade Antennas.

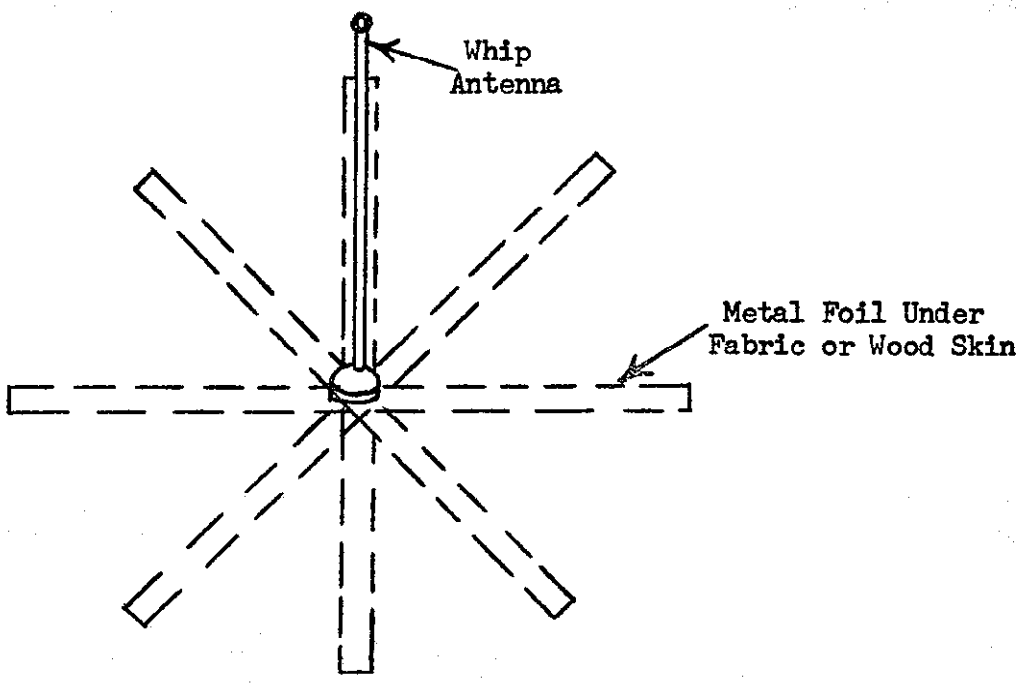

Figure 22-3.—Antenna Ground Plane for Nonmetallic Airplanes.

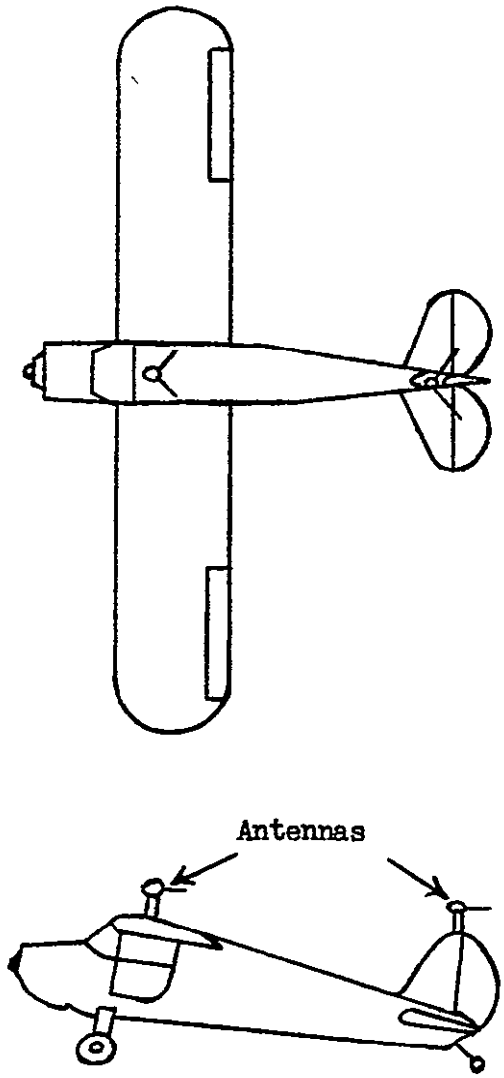

Figure 22-4.—Two Preferred Locations for VOR Antennas To Provide Good Signal Pickup and Minimum Engine Ignition Interference.

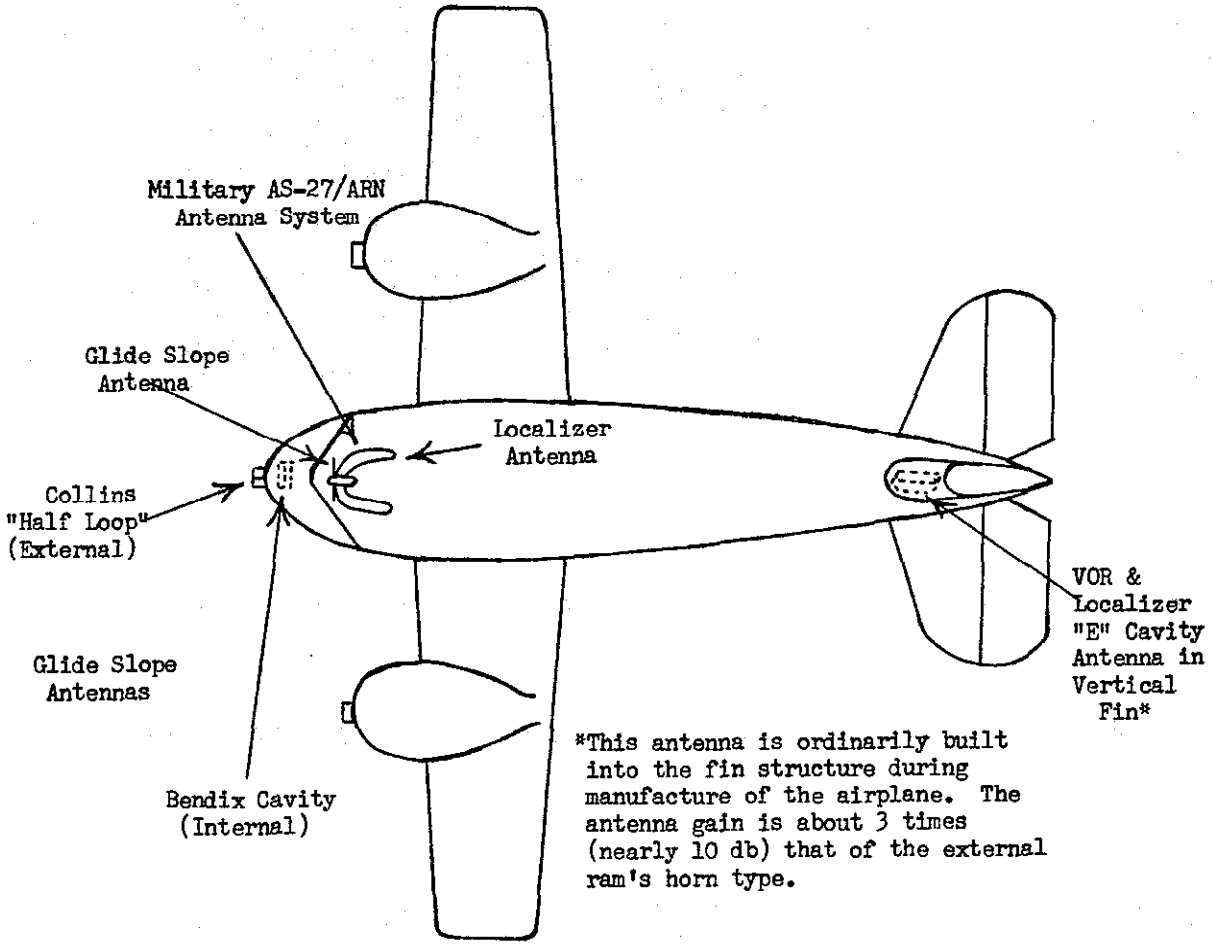

Figure 22-5.—Instrument Landing System Glide Slope and Localizer Receiver Antennas.

Appendix D

Examples

Example 1

PERIODIC AND 100-HOUR AIRCRAFT INSPECTION CHECKLIST

1. Aircraft specification and Airworthiness directive conformance. Yes___ No___

2. INSPECTION (INDICATE WHETHER AIRWORTHY OR NOT BY CHECKING (√) APPROPRIATE BLOCK)

3. Fuselage—Hull Group	Yes	No
a. Fuselage structure		
b. Fabric—skin		
c. External bracing		
d. Control mechanism		
e. Electrical system		
f. Hydraulic system		
g. Fuel system—tanks		
h. Emergency exits		
i. Cargo compartments		
j. Rotor drive shafts		
k. Hull		
l. Envelope		
m. Gas bag		
n. Ballast tanks		

4. Cabin—Cockpit Group	Yes	No
a. Fuel system—tanks		
b. Oil system		
c. Electrical system		
d. Batteries		
e. Hydraulic system		
f. Instruments		
g. Flight—engine controls		
h. Seats—berths		
i. Safety belts		
j. Fire-warning system		
k. Fire-extinguisher system		
l. Heating—ventilating		
m. Windows—windshields		
n. Control car		

5. Engine—Nacelle Group	Yes	No
a. Fuel system		
b. Oil system—tanks		
c. Ignition—electrical system		
d. Exhaust stacks or manifolds		
e. Cooling system		
f. Engine controls		
g. Power plant—general		
h. Superchargers		
i. Heating—ventilating system		
j. Engine mount—attach fittings		
k. Engine accessories		
l. Engine cowling		
m. Main rotor transmission gear box		

6. Landing Gear Group	Yes	No
a. Main landing gear		
b. Tail—nose gear		
c. Latches		
d. Retracting mechanism		
e. Landing gear attach fittings		
f. Electrical system		
g. Hydraulic system		
h. Wheels—brakes		
i. Floats		
j. Struts—attach fittings		
k. Skis—fittings		

7. Wing—Centersection Group	Yes	No
a. Fixed surfaces		
b. Movable surfaces		
c. Fabric—skin		
d. External bracing		
e. Wing attach fittings		
f. Flight-control mechanism		
g. Fuel system—tanks		
h. Electrical system		
i. Hydraulic system		
j. Anti-icing devices		
k. Gust lock mechanism		
l. Main rotor blades		

8. Empennage Group	Yes	No
a. Fixed surfaces		
b. Movable surfaces		
c. Fabric—skin		
d. External bracing		
e. Attach fittings		
f. Flight-control mechanism		
g. Electrical system		
h. Hydraulic system		
i. Anti-icing devices		
j. Gust lock mechanism		
k. Tail rotor blades		

9. Propeller Group	Yes	No
a. Propeller blades		
b. Propeller hub(s)		
c. Control mechanism		
d. Attachment		
e. Accessories		
f. Anti-icing devices		

10. Radio Group (Installation)	Yes	No
a. Receiver		
b. Transmitter		
c. Antennas—insulators		
d. Bonding—shielding		
e. ADF receiver—loops		
f. Dynamotor		
g. Auxiliary power unit		
h. Electronic devices		

11. Miscellaneous Group	Yes	No
a. Position-light flasher mechanism		
b. First-aid—emergency equipment		
c. Industrial and advertising installations		
d. Pyrotechnics installation		
e. Water-injection systems		
f. Oil-dilution system		

12. Operational check - preflight satisfactory Yes___ No___

414269 O - 57 - 16

Example 2

TYPICAL ROUTINE AND DETAILED INSPECTIONS FOR AIRCRAFT COMPONENTS AND SYSTEMS FOR PROGRESSIVE INSPECTION

1. FUSELAGE GROUP

(a) *Routine inspection of fuselage group.*—Visual check of the exterior of the fuselage or hull for deterioration, distortion, or other evidence of failure or damage. The systems or components installed in this group should also be checked for condition and operation.

(b) *Detailed inspection of fuselage group.*—Thorough examination of the exterior and interior of the airframe by such disassembly as necessary for condition of the structures for failure or damage. The systems and components should be checked for installation, condition, and operation.

2. POWERPLANT GROUP

(a) *Routine inspection of powerplant group.*—Visual check of engine and accessory compartment for signs of oil, exhaust, fuel, or hydraulic leaks. Trace any and all leaks to their origin so that they may be corrected. The engine mount for condition and attachment. Engine controls for condition and operation. Cowling, accessories, and systems for condition and attachment.

(b) *Detailed inspection of powerplant group.*—Thorough examination of engine and accessories and systems. Determine the general internal condition of the engine by checking cylinder compression and the condition of oil screens and sump drain plugs for evidence of foreign substances or metal particles. Cylinders with weak compression should be removed to determine the internal condition and to check clearances for proper tolerances. Source of foreign substances and metal particles should be determined and corrected. Clean, examine, and adjust if necessary, magneto distributor and breaker points, generator brushes, and generator controls. Clean and examine fuel and hydraulic screens and check the fuel and hydraulic systems, under pressure, for leakage and condition. Check engine controls for condition, correct travel, and operation. Inspect cowling for condition and attachment.

3. PROPELLER GROUP

(a) *Routine inspection of propeller.*—Visual check of propeller blades and hubs, and also accessories and controls, if installed, for condition, track, security of attachment, and operation.

(b) *Detailed inspection of propeller.*—Thorough inspection of propeller blades and hubs, and also accessories and controls, if installed, for track, condition, security of attachment, and operation through full range.

4. EMPENNAGE GROUP

(a) *Routine inspection of empennage.*—Visual check of exterior of empennage for condition, evidence of deterioration, distortion or damage. Attachment, condition, and operation of movable surfaces including trim tabs.

(b) *Detailed inspection of empennage.*—Thorough examination of exterior and interior of the empennage by such dissassembly as necessary for condition of structures. Attachment, condition, correct travel, and operation of movable surfaces including trim tabs.

5. WING AND CENTER-SECTION GROUP

(a) *Routine inspection of wing and center-section group.*—Visual check of exterior of wing and center-section for condition, evidence of deterioration, distortion, or damage. Attachment and condition and operation of movable surfaces and systems.

(b) *Detailed inspection of wing and center-section group.*—Thorough examination of exterior and interior of wing and center-section by such disassembly as necessary for condition of structure. Attachment, condition, correct travel and operation of movable surfaces. Condition, operation, and attachment of systems.

6. LANDING GEAR GROUP

(a) *Routine inspection of landing gear group.*—Visual check of landing gear group attachment and condition for deterioration, wear leakage, distortion, or damage. Service oleo fluid as

necessary. Check tire pressure and operation of brakes or water rudders if installed.

(b) *Detailed inspection of landing gear group.*—Thorough examination of landing gear group attachment and condition for deterioration, wear, leakage, distortion or damage and, when installed, proper operation of retraction system. Disassemble wheels and tires as necessary for condition and brakes for adjustment and operation.

7. Cabin and Cockpit Group

(a) *Routine inspection of cabin and cockpit group.*—Visual check of cabin and cockpit group for attachment, condition and, if applicable, check operation of seats, seat belts, windows, windshields, radio, instruments, fuel, hydraulic and electrical systems, engine and flight controls.

(b) *Detailed inspection of cabin and cockpit group.*—Thorough examination of cabin and cockpit group by such disassembly as necessary for attachment and condition, including operation and test, if applicable, of seats, seat belts, windows, windshields, radio, instrument, electrical, fuel and hydraulic systems, and engine and flight controls.

8. Radio Group

(a) *Routine inspection of radio group.*—Visual check of radio and electronic equipment for attachment and condition. Check antennas for security of attachment and cleanliness and operation of equipment.

(b) *Detailed inspection of radio group.*—Thorough examination and functional test of radio and electronic equipment by such removal or disassembly as necessary for condition and operation.

9. Miscellaneous Group

(a) *Routine inspection of miscellaneous group.*—Visual check of miscellaneous group for attachment, condition, and operation if applicable.

(b) *Detailed inspection of miscellaneous group.*—Thorough examination of miscellaneous group by such removal and disassembly as necessary for condition and operation if applicable.

10. Operational Check—Preflight

Prior to releasing an aircraft as airworthy for operation after routine and detailed inspections, the engine or engines shall be run up to determine satisfactory performance by checking the power output (static r. p. m.), magneto drop, fuel and oil pressure, cylinder and oil temperatures, and general operation in accordance with manufacturer's recommendations.

Example 3

PROGRESSIVE INSPECTION SCHEDULE

	Routine	*Detailed*	*Overhaul*
	(Specify intervals as indicated below)		
Fuselage Group:			
Fuselage or hull covering	No. hours	No. hours	Mfr. recom. (hours).
Fuselage or hull structure	do	do	Do.
Powerplant Group:			
Engine	do	do	Do.
Engine controls	do	do	Engine change.
Engine cowling	do	do	Do.
Engine accessories and rotor transmissions	do	do	Do.
Engine mount	do	do	Do.
Fuel and oil system	do	do	Do.
Ignition system	do	do	Do.
Cooling and exhaust system	do	do	Do.

Example 3—continued

	Routine	*Detailed*	*Overhaul*
	(Specify intervals as indicated below)		
WING AND CENTER-SECTION GROUP:			
Wing or main rotor covering	No. hours	No. hours	Mfr. recom. (hours).
Wing or main rotor structure	do	do	Do.
Aileron and tab covering	do	do	Do.
Aileron and tab structure	do	do	Do.
Flap covering	do	do	Do.
Flap structure	do	do	Do.
PROPELLER GROUP:			
Propeller or tail rotor blades and hubs	do	do	Engine change.
Propeller or tail rotor controls	do	do	Do.
EMPENNAGE GROUP:			
Stabilizer covering	do	do	Mfr. recom. (hours).
Stabilizer structure	do	do	Do.
Fin covering	do	do	Do.
Fin structure	do	do	Do.
Rudder and tab covering	do	do	Do.
Rudder and tab structure	do	do	Do.
Elevator and tab covering	do	do	Do.
Elevator and tab structure	do	do	Do.
CABIN AND COCKPIT INTERIOR:			
Flight controls	do	do	Do.
Engine controls	do	do	Engine change.
Flight and engine instruments	do	do	Do.
Pneumatic and vacuum systems	do	do	Mfr. recom. (hours).
Electrical system	do	do	Do.
Hydraulic system	do	do	Do.
LANDING GEAR GROUP:			
Shock struts	do	do	Do.
Wheels, tires, and brakes	do	do	On condition.
Retraction system	do	do	Mfr. recom. (hours).
RADIO GROUP:			
Power supply	do	do	No. days.
Antenna	do	do	Do.
Receivers	do	do	Do.
Transmitters	do	do	Do.
Cabling	do	do	Do.
Radio instruments	do	do	Do.
Microphones and earphones	do	do	Do.
Intercom	do	do	Do.
Controls	do	do	Do.
MISCELLANEOUS GROUP:			
Fire warning and extinguishing equipment	do	do	Engine change.
Anti-icing and de-icing equip	do	do	Mfr. recom. (hours).
Emergency equipment including pyrotechnics	do	do	On condition.

Appendix [E]

Special Civil Air Regulations
Which Affect Part 18

SPECIAL CIVIL AIR REGULATION NO. SR–377C

Effective: Nov. 1, 1962
Adopted: Oct. 31, 1962
Published: Nov. 2, 1962
(27 F.R. 10674)

Mechanical Work Performed on United States Registered Aircraft by Certain Canadian Mechanics

Special Civil Air Regulation No. SR–377B, effective from November 1, 1961, to November 1, 1962, extended the provisions of SR–377A, which provided an implementation of a reciprocal arrangement between Canada and the United States. The purpose of this Special Civil Air Regulation is to extend the provisions of SR–377B for an additional one year period.

Section 610(a) of the Federal Aviation Act of 1958 provides, in pertinent part, that, "It shall be unlawful . . . for any person to serve in any capacity as an airman in connection with any civil aircraft, aircraft engine, propeller or appliance used or intended for use, in air commerce without an airman certificate authorizing him to serve in such capacity. . . ." The term "airman" as defined in section 101(7) of the Act includes ". . . (except to the extent the Administrator may otherwise provide with respect to individuals employed outside the United States) any individual who is directly in charge of the inspection, maintenance, overhauling, or repair of aircraft, aircraft engines, propellers, or appliances. . . ." Under the provisions of this latter section, the Administrator is authorized, in effect, to exempt certain persons employed outside the United States from the requirements of holding a United States airman certificate.

The current provisions of SR–377B permit maintenance, repair, and alteration operations on aircraft of United States registry to be performed in Canada by or under the direct supervision of a mechanic holding a certificate of competence and appropriate ratings issued by the Canadian Government, subject to the condition that such operations performed are listed and certified by him in a manner and on a form prescribed by the Administrator, and subject to the further condition that all such operations are performed in conformance with the requirements of Part 18 of the Civil Air Regulations.

At the time of the adoption of SR–377B, it was anticipated that a notice of proposed rule making would be issued providing for certain amendments to that regulation as a further implementation of the reciprocal arrangement with Canada. Subsequently, however, the Agency initiated a similar study into the matter of the maintenance or alteration of aircraft of U.S. registry in other countries outside the United States. This study and any subsequent regulatory action thereon would include maintenance on U.S. registered aircraft in Canada as well as in other countries. Therefore, it was decided to withhold the anticipated amendments to SR–377B pending the outcome of such study.

In the meantime, since the circumstances which necessitated the adoption of SR–377B and its predecessor regulations continue to exist, the provisions of that regulation are hereby extended for an additional period of one year.

Since the provisions contained herein extend the provisions of a previous regulation and impose no additional burden upon any person, compliance with the notice and public procedure provisions of the Administrative Procedure Act is unnecessary and good cause exists for making this regulation effective on less than 30 days' notice.

In consideration of the foregoing, the following Special Civil Air Regulation is hereby adopted, to become effective November 1, 1962:

1. An individual holding a valid mechanic certificate of competence and appropriate ratings issued by the Canadian Government shall not be deemed an airman within the meaning of section 101(7) of the Federal Aviation Act of 1958, with respect to inspection, maintenance, overhaul, or repair operations conducted in Canada in connection with aircraft of United States registry, and such individual, notwithstanding any contrary provisions of the Civil Air Regulations, may perform such operations in connection with United States aircraft in Canada: *Provided,* That, in the case of repair, alteration, and maintenance, each operation performed is listed and certified to by him in a manner and on a form prescribed by the Administrator: *And provided further,* That all such repairs, alterations, and maintenance operations shall be performed in conformance with the requirements of Part 18 of the Civil Air Regulations.

2. An aircraft, aircraft engine, or propeller on which any major repair or major alteration has been performed as authorized herein shall not be flown in air commerce until examined, inspected, and approved by a Canadian Department of Transport Inspector of Aircraft. Such approval shall be indicated in a manner and on a form prescribed by the Administrator.

This regulation supersedes Special Civil Air Regulation No. SR–377B, and shall terminate November 1, 1963, unless sooner superseded or rescinded by the Federal Aviation Agency.

SPECIAL CIVIL AIR REGULATION NO. SR-397

Effective: June 30, 1953
Adopted: June 30, 1953
Published: July 4, 1953
(18 F.R. 3830)

Authorization for the United States Forest Service to Deviate from the Civil Air Regulations

The Forest Service of the United States Department of Agriculture uses both public and civil aircraft to carry personnel and equipment to fire areas. The aircraft and pilots are certificated and, where possible, Forest Service operations are conducted in accordance with the Civil Air Regulations. In order to deal effectively with fire control and other Forest Service specialized activities, however, it is often necessary to use uncertificated personnel as parachute riggers during peak-load periods, to remove seats and safety belts from aircraft in which fire fighters are carried, to drop equipment and supplies from aircraft, and to deviate from other provisions of the Civil Air Regulations such as minimum altitudes and visibility conditions. Due to the exigencies of the particular situation, it is usually impracticable for the Forest Service to seek authority in each particular instance to deviate from the provisions of the Civil Air Regulations. In view of the public service rendered by this organization and the well organized supervisory control which the Forest Service exercises over its operations, it is considered desirable that the Board authorize the Forest Service to deviate from the Civil Air Regulations and normal practices thereunder when necessary for their operations.

This regulation authorizes the Chief of the Forest Service to permit aircraft and airmen, while engaged in Forest Service operations, to deviate from the Civil Air Regulations to the extent that he finds necessary for the expeditious conduct of such operations. The regulation also provides that the Administrator shall establish a procedure for notification by the Chief of the Forest Service of those deviations which he has authorized.

Interested persons have been afforded an opportunity to participate in the making of this regulation, and due consideration has been given to all relevant matter presented. Since this regulation imposes no additional burden on any person, it may be made effective without prior notice.

In consideration of the foregoing the Civil Aeronautics Board hereby makes and promulgates the following Special Civil Air Regulation, effective immediately:

Contrary provisions of the Civil Air Regulations notwithstanding, the Chief, Forest Service, United States Department of Agriculture, is authorized to permit aircraft and airmen, while engaged in operations conducted for the United States Forest Service, to deviate from the provisions of the Civil Air Regulations to the extent that he finds necessary for the expeditious conduct of such operations. The Chief, Forest Service, shall notify the Administrator of any deviation which he has authorized and the reasons therefor in accordance with a procedure established by the Administrator.

Addendum

Preambles to Amendments to Civil Air Regulations Part 18

NOTE

Part 18 of the Civil Air Regulations was last revised by the Civil Aeronautics Board with an effective date of July 17, 1956. This was not a general revision of the part, but only a reprint to incorporate outstanding amendments and to make minor editorial changes. This revision was published in the Federal Register on June 30, 1956 (21 F.R. 4862).

Amendment 18–1

Applicability of Part 18

Adopted: March 7, 1957
Effective: April 11, 1957
Published: March 14, 1957
(22 F.R. 1631)

Presently effective Part 18 of the Civil Air Regulations contains rules for the performance of maintenance, repair, and alteration of aircraft which are made applicable by section 18.0 thereof to "aircraft for which airworthiness certificates have been issued by the Administrator, or any component thereof." This language suggests that only certificated airmen are authorized to perform maintenance, repairs, and alterations on an aircraft if it has ever been issued an airworthiness certificate, regardless of whether or not such aircraft is ever intended again to be used in air commerce in the United States. Such was not the intent when Part 18 was promulgated and is, in fact, more restrictive than the Civil Aeronautics Act of 1938, as amended.

Therefore, section 18.0 is being amended to establish that the rules for the performance of maintenance, repairs, and alterations on civil aircraft apply to work performed on a civil aircraft, or any of its components, only when the airworthiness certificate issued for the aircraft by the Administrator has not been surrendered or revoked. It will be noted that this amendment to section 18.0 uses the term "certificated aircraft," and defines it in section 18.1 as a civil aircraft for which an airworthiness certificate issued by the Administrator has not been surrendered or revoked.

Section 18.10 of Part 18 requires certificated airmen for the performance of maintenance on a civil aircraft when such aircraft is of current United States registry. This section is amended to make it consistent with the scope of the applicability provisions of section 18.0 as amended herein. As a result of this amendment to section 18.10, if the certificate of airworthiness issued for a civil aircraft has not been surrendered or revoked, only those persons authorized by section 18.10 may perform maintenance, repairs, and alterations on such aircraft or any of its components, regardless of whether the aircraft is currently registered.

The amendments to sections 18.0 and 18.10 were published in the Federal Register as a notice of proposed rule making (21 F.R. 3905) and circulated for comment on June 4, 1956, as Civil Air Regulations Draft Release No. 56–15. Comment received in response to Draft Release No. 56–15 indicated that some confusion exists with respect to whether preventive maintenance performed by a pilot as authorized under present section 18.10(c) is required by section 18.11 to be approved before being returned to service. It has been the intent of the Board that preventive maintenance performed as authorized under section 18.10(c) not be required to be approved before the aircraft or appliance is returned to service. In order to make this intent clear in the rules and, thereby, eliminate any possible confusion which may exist, a clarifying amendment is made herein to section 18.11(a).

Interested persons have been afforded an opportunity to participate in the making of these amendments, with the exception of the clarifying amendment to section 18.11(a), and due consideration has been given to all relevant matter presented. Since the amendment to section 18.11(a) is clarifying in nature and imposes no additional burden on any person, the Board finds that notice and public procedure with respect thereto is unnecessary.

Amendment revised section 18.0; added definition "certificated aircraft" to section 18.1; and revised the first sentence of section 18.10 and section 18.11(a).

Amendment 18-2

Required Records

Adopted: Oct. 1, 1958
Effective: Nov. 5, 1958
Published: Oct. 7, 1958
(23 F.R. 7721)

A notice of proposed rule making was published in the Federal Register March 13, 1958, (23 F.R. 1737) and circulated to the industry as Economic Regulations Draft Release No. 92, dated March 7, 1958, which proposed to amend Part 18 to bring the maintenance record requirements into accord with the widespread use of the approved system of continuous maintenance and the increased complexity of modern aircraft and their components. In addition, it was proposed to make such changes as were necessary to achieve consistency with corresponding record retention provisions in Part 249 of the Economic Regulations, "Preservation of Air Carrier Accounts, Records and Memoranda."

Accordingly, concurrently with the amendment of Part 249, the maintenance record provisions of section 18.24 of Part 18 are being amended to require retention for at least one year of records of all maintenance performed. In addition to this requirement, the records of the last complete overhaul cycle for each aircraft and its components must also be kept available at all times when an approved maintenance system is used. The latter retention requirement recognizes the widespread use by air carriers of the approved system of continuous maintenance and is intended to insure that one complete set of the most recent overhaul records for each aircraft and its components will be available for inspection and accident investigation purposes. Any procedure which does not insure the availability of one complete set of records covering the last complete overhaul cycle for each aircraft will not be deemed to have met the record retention requirements which apply in the case of aircraft maintained in accordance with an approved continuous maintenance system. In adopting this amendment the Board has considered and finds unacceptable the suggestion that the records of overhaul be retained in accordance with a "sampling" inspection procedure. Such suggestion would not insure that complete records for each aircraft would be available for accident investigation purposes.

With respect to records of major structural repairs and alterations, the retention requirements are being amended to require retention of such records until the aircraft is sold, in which case the records are to be transferred with the aircraft, or, if the aircraft is retired, for one year from the date of cancellation of the registration certificate.

A new provision is being added to provide for the retention of records of X-rays, and other special tests specified by the Administrator, which relate to aircraft components designated by the Administrator as "critical" components as, for example, the records of special tests conducted on propellers. There are propellers used on conventional air carrier aircraft which are of such a critical nature as to require, during manufacture and periodically throughout their useful life, examination by such means as X-ray and sonic tests, among others. Furthermore, it is anticipated that many more of the components of turbine-powered aircraft which the air carriers will be using in significant numbers in the near future will be of such a critical nature, due to high speeds and stresses, as to require special examinations and tests periodically throughout their useful life. The Board considers it essential that those components of conventional and turbine-powered aircraft which are of a critical nature be in a safe condition for use. This amendment will give greater assurance of the safety of components designated by the Administrator as "critical" by requiring the records of special tests to be retained by the air carrier until such components are sold or, if retired, for one year from the date of retirement or the cancellation of the registration certificate, if registered.

The foregoing record requirements are considered necessary to enable the Board and the Administrator to discharge fully their respective accident investigation and safety regulatory responsibilities.

Interested persons have been afforded an opportunity to participate in the making of this regulation (23 F.R. 1737), and due consideration has been given to all relevant matter presented.

Amendment designated the present text as paragraph (a) and added a new paragraph (b) to section 18.24.

U. S. GOVERNMENT PRINTING OFFICE : 1961 O - 621265

Amendment 18–3

Miscellaneous Amendments Resulting From the First Federal Aviation Agency Airworthiness Review

Adopted: Mar. 27, 1962
Effective: May 3, 1962
Published: Mar. 30, 1962 (27 F.R. 3003)

As a result of the First Federal Aviation Agency Airworthiness Review, the Agency published a notice of proposed rule making affecting several parts of the Civil Air Regulations. This notice was published in the FEDERAL REGISTER (26 F.R. 5130) and circulated as Civil Air Regulations Draft Release No. 61–12 dated June 8, 1961. There are contained herein amendments to Part 18 of the Civil Air Regulations which stem from this First FAA Airworthiness Review.

Section 18.13 is being amended and section 18.13–1 is being deleted in conjunction with changes to Part 43 to provide a means for maintaining the currency of documents which show aircraft operating limitations whenever repairs or alterations are made which affect the limitations.

Interested persons have been afforded an opportunity to participate in the making of this amendment, and due consideration has been given to all relevant matter presented.

Amendment revised section 18.13 and deleted section 18.13–1.

U.S. GOVERNMENT PRINTING OFFICE: 1962 O—640373