Master
CAM 4b

Federal Aviation Agency
Washington, D.C.

Civil Aeronautics Manual 4b
Airplane Airworthiness; Transport Categories

Supplement No. 1, CAM 4b dated May 1, 1960 — February 1, 1961

SUBJECT: Certification and Operation of Certain Airplanes for the Department of the Interior in the Trust Territory of the Pacific Islands.

This supplement is issued to incorporate into CAM 4b new Special Civil Air Regulation No. SR-403A, Certification and Operation of Certain Airplanes for the Department of the Interior in the Trust Territory of the Pacific Islands. This regulation was issued August 4, 1960, and was effective on August 9, 1960, and supersedes Special Civil Air Regulations Nos. SR-364, SR-364A, and SR-403. Special regulations SR-364 and SR-364A were not reproduced in CAM 4b.

Since this regulation is new in its entirety, it is not enclosed in black brackets.

Remove the following pages:	*Insert the following new pages:*
XV and XVI	XV and XVI
243 and 244	243 and 244

Oscar Bakke

OSCAR BAKKE, *Director*
Bureau of Flight Standards

Attachments.

Checked 4/4/61 cb

Introductory Note

This manual contains in consolidated form (1) Civil Air Regulations Part 4b, Airplane Airworthiness; Transport Categories, dated December 31, 1953, Amendments 4b–1 through 4b–11, and the editorial changes required by Special Regulation SR–430, effective December 31, 1958; and (2) the rules, policies, and interpretations issued by the Administrator of the Federal Aviation Agency in application to the various sections of the regulations.

FAA *rules* are supplementary regulations issued pursuant to authority expressly conferred on the Administrator in the Civil Air Regulations. Such rules are mandatory and must be complied with.

FAA *policies* provide detailed technical information on recommended methods of complying with the Civil Air Regulations. Such policies are for the guidance of the public and are not mandatory in nature.

FAA *interpretations* define or explain words and phrases of the Civil Air Regulations. Such interpretations are for the guidance of the public and will be followed by the Agency in determining compliance with the regulations.

This manual is arranged to give the number, title, and text of each section of the regulations followed by any rules, policies, or interpretations applicable to that section. These rules, policies, or interpretations of the Administrator are identified by consecutive numbers appended by a dash to the regulation section number.

This manual supersedes Civil Aeronautics Manual 4b dated January 1958 and reprint dated March 1959, and all supplements thereto. As amendments and other pertinent materials pertaining to Part 4b are issued, they will be included in this manual.

Contents

Subpart A—General

Applicability and Definitions

	Section	Page
Applicability of this part	**4b.0**	1
Definitions	**4b.1**	1

Certification

Eligibility for type certificates	**4b.10**	5
Approval of reverse thrust propellers (*FAA policies which apply to sec. 4b.10*)	4b.10–1	5
Approval of automatic propeller feathering installations (*FAA policies which apply to sec. 4b.10*)	4b.10–2	5
Minimum quantity of anti-detonant fluid required (*FAA policies which apply to sec. 4b.10*)	4b.10–3	5
Designation of applicable regulations	**4b.11**	5
Recording of applicable regulations	**4b.12**	6
Type certificate	**4b.13**	6
Data required	**4b.14**	6
Inspections and tests	**4b.15**	7
Flight tests	**4b.16**	7
Applicant's flight test report (*FAA policies which apply to sec. 4b.16*)	4b.16–1	7
Preflight test planning (*FAA policies which apply to sec. 4b.16 (a)*)	4b.16–2	7
Additional flight tests (*FAA policies which apply to sec. 4b.16 (b)*)	4b.16–3	8
Flight tests (*FAA policies which apply to sec. 4b.16*)	4b.16–4	11
Airworthiness, experimental, and production certificates	**4b.17**	11
Approval of materials, parts, processes, and applicances	**4b.18**	11
Approval of aircraft materials, parts, processes and applicances (*FAA rules which apply to sec. 4b.18*)	4b.18–1	12
Application of Technical Standard Orders—C Series (*FAA policies which apply to sec. 4b.18*)	4b.18–2	12
Manufacturer (*FAA interpretations which apply to sec. 4b.18 (b)*)	4b.18–3	13
Approval of products under the type certificate or modification procedures (*FAA policies which apply to sec. 4b.18 (b)*)	4b.18–4	13
Changes in type design	**4b.19**	13

Subpart B—Flight

General

Proof of compliance	**4b.100**	13
Procedure for demonstrating compliance with the flight requirements (*FAA policies which apply to sec. 4b.100 (a)*)	4b.100–1	14
Selection of weight, altitudes, speeds and wing flap positions (*FAA policies which apply to sec. 4b.100 (b)*)	4b.100–2	15
Flying qualities (*FAA policies which apply to sec. 4b.100 (c)*)	4b.100–3	16
Weight limitations	**4b.101**	16
Center of gravity limitations	**4b.102**	17
Additional limitations on weight distribution	**4b.103**	17
Empty weight	**4b.104**	17
Use of ballast	**4b.105**	17
Use of ballast during flight tests (*FAA policies which apply to sec. 4b.105*)	4b.105–1	17

Performance

	Section	Page
General	**4b.110**	17
Engine power corrections (*FAA policies which apply to sec. 4b.110*)	4b.110–1	18
Engine power calibration (*FAA policies which apply to sec. 4b.110*)	4b.110–2	18
Wing flap positions	**4b.111**	20
Selection of the wing flap positions (*FAA policies which apply to sec. 4b.111*)	4b.111–1	20
Stalling speeds	**4b.112**	21
Procedure for determining stalling speeds (*FAA policies which apply to sec. 4b.112 (c)*)	4b.112–1	21
Take-off; general	**4b.113**	24
Downwind takeoff (*FAA policies which apply to sec. 4b.113*)	4b.113–1	24
Determination of the takeoff field length (*FAA policies which apply to sec. 4b.113*)	4b.113–2	25
Take-off speeds	**4b.114**	26
Selection of the takeoff speeds (*FAA policies which apply to sec. 4b.114*)	4b.114–1	27
Accelerate-stop distance	**4b.115**	27
Determination of the accelerate-stop distance (*FAA policies which apply to sec. 4b.115*)	4b.115–1	27
Approval of automatic propeller feathering installations for use in establishing accelerate-stop distance (*FAA policies which apply to sec. 4b.115*)	4b.115–2	29
Reverse thrust used in accelerate-stop distance (*FAA policies which apply to sec. 4b.115*)	4b.115–3	29
Accelerate-stop distance with an antiskid device installed (*FAA policies which apply to sec. 4b.115*)	4b.115–4	29
Take-off path	**4b.116**	29
Approval of automatic propeller feathering installations for use in establishing the takeoff path (*FAA policies which apply to sec. 4b.116*)	4b.116–1	29
Determination of the takeoff path (*FAA policies which apply to sec. 4b.116*)	4b.116–2	30
Temperature accountability	**4b.117**	32
Climb; general	**4b.118**	32
Test procedures for the determination of climb performance (*FAA policies which apply to sec. 4b.118*)	4b.118–1	34
Climb; all engines operating	**4b.119**	35
Determination of all engine climb (*FAA policies which apply to sec. 4b.119*)	4b.119–1	36
One-engine-inoperative climb	**4b.120**	36
Approval of automatic propeller feathering installations for use in establishing flaps in takeoff position climb (*FAA policies which apply to sec. 4b.120 (a) and (b)*)	4b.120–1	37
Determination of one-engine-inoperative climb (*FAA policies which apply to sec. 4b.120*)	4b.120–2	37
Two-engine-inoperative climb	**4b.121**	38
Determination of two-engine-inoperative climb (*FAA policies which apply to sec. 4b.121*)	4b.121–1	38
Determination of the landing distance; general	**4b.122**	38
Downwind landings (*FAA policies which apply to sec. 4b.122*)	4b.122–1	38
Determination of the landing distances (*FAA policies which apply to sec. 4b.122*)	4b.122–2	40
Reverse thrust used in determination of landing distance (*FAA policies which apply to sec. 4b.122*)	4b.122-3	40
Determination of the landing distance with an antiskid device installed (*FAA policies which apply to sec. 4b.122*)	4b.122–4	40
Landplanes	**4b.123**	40
Excessive wear of brakes or tires (*FAA interpretations which apply to sec. 4b.123 (b)*)	4b.123-1	40
Determination of the landing distance (landplanes) (*FAA policies which apply to sec. 4b.123*)	4b.123–2	40

	Section	Page
Landplanes—Continued		
Reverse thrust used in landing distance-landplanes (*FAA policies which apply to sec. 4b.123 (c)*)	4b.123–3	41
Procedure in determination of landing distance with an antiskid device installed (*FAA policies which apply to sec. 4b.123*)	4b.123–4	41
Seaplanes or floatplanes	**4b.124**	41
Determination of the landing distance (seaplanes) (*FAA policies which apply to sec. 4b.124*)	4b.124–1	41
Skiplanes	**4b.125**	41
Determination of the landing distances (skiplanes) (*FAA policies which apply to sec. 4b.125*)	4b.125–1	41
Controllability		
Controllability; general	**4b.130**	41
Procedure for demonstrating controllability qualities (*FAA policies which apply to sec. 4b.130*)	4b.130–1	42
Longitudinal control	**4b.131**	42
Procedure for demonstrating longitudinal control (*FAA policies which apply to sec. 4b.131*)	4b.131–1	43
Directional and lateral control	**4b.132**	45
Procedure for demonstrating directional and lateral control (*FAA policies which apply to sec. 4b.132*)	4b.132–1	45
Minimum control speed, V_{MC}	**4b.133**	46
Determination of the minimum control speed, V_{MC} (*FAA policies which apply to sec. 4b.133*)	4b.133–1	47
Trim		
General	**4b.140**	48
General trim qualities (*FAA policies which apply to sec. 4b.140*)	4b.140–1	48
Lateral and directional trim	**4b.141**	48
Procedure for demonstrating lateral and directional trim (*FAA policies which apply to sec. 4b.141*)	4b.141–1	48
Longitudinal trim	**4b.142**	49
Procedure for demonstrating longitudinal trim (*FAA policies which apply to sec. 4b.142*)	4b.142–1	49
Longitudinal, directional, and lateral trim	**4b.143**	49
Procedure for demonstrating longitudinal, directional, and lateral trim (*FAA policies which apply to sec. 4b.143*)	4b.143–1	50
Trim for airplanes with four or more engines	**4b.144**	50
Procedure for demonstrating trim for airplanes with four or more engines (*FAA policies which apply to sec. 4b.144*)	4b.144–1	50
Stability		
General	**4b.150**	50
General stability requirements (*FAA policies which apply to sec. 4b.150*)	4b.150–1	51
Static longitudinal stability	**4b.151**	51
Procedure for demonstrating static longitudinal stability (*FAA policies which apply to sec. 4b.151*)	4b.151–1	51
Stability during landing	**4b.152**	52
Procedure for demonstrating stability during landing (*FAA policies which apply to 4b.152*)	4b.152–1	52
Stability during approach	**4b.153**	52
Procedure for demonstrating stability during approach (*FAA policies which apply to sec. 4b.153*)	4b.153–1	52
Stability during climb	**4b.154**	53
Procedure for demonstrating stability during climb (*FAA policies which apply to sec. 4b.154*)	4b.154–1	53
Stability during cruising	**4b.155**	53
Procedure for demonstrating stability during cruising (*FAA policies which apply to sec. 4b.155*)	4b.155–1	53

	Section	Page
Dynamic longitudinal stability	**4b.156**	54
Procedure for demonstrating dynamic longitudinal stability (*FAA policies which apply to sec. 4b.156*)	4b.156–1	54
Static directional and lateral stability	**4b.157**	54
Procedure for demonstrating static directional and lateral stability (*FAA policies which apply to sec. 4b.157*)	4b.157–1	54
Dynamic directional and lateral stability	**4b.158**	56
Procedure for demonstrating dynamic directional and lateral stability (*FAA policies which apply to sec. 4b.158*)	4b.158–1	56

Stalling Characteristics

Stalling; symmetrical power	**4b.160**	56
Procedure for demonstrating stall tests, symmetrical power (*FAA policies which apply to sec. 4b.160 (c) (2)*)	4b.160–1	57
Stalling; asymmetrical power	**4b.161**	59
Procedure for demonstrating stall tests, asymmetrical power (*FAA policies which apply to sec. 4b.161*)	4b.161–1	59
Stall warning	**4b.162**	60
Stall warning (*FAA policies which apply to sec. 4b.162*)	4b.162–1	60

Ground Handling Characteristics

Longitudinal stability and control	**4b.170**	60
Procedure for demonstrating longitudinal stability and control on the ground (*FAA policies which apply to sec. 4b.170*)	4b.170–1	60
Longitudinal stability and control with reverse thrust (*FAA policies which apply to sec. 4b.170*)	4b.170–2	61
Longitudinal stability and control with an antiskid device installed (*FAA policies which apply to sec. 4b.170*)	4b.170–3	61
Directional stability and control	**4b.171**	61
Procedure for demonstrating directional stability and control on the ground (*FAA policies which apply to sec. 4b.171*)	4b.171–1	61
Directional stability and control with reverse thrust (*FAA policies which apply to sec. 4b.171*)	4b.171–2	61
Directional stability and control with an antiskid device installed (*FAA policies which apply to sec. 4b.171*)	4b.171–3	61
Shock absorption	**4b.172**	61
Shock absorbing mechanism tests (*FAA policies which apply to sec. 4b.172*)	4b.172–1	61
Demonstrated crosswind	**4b.173**	61
Crosswind demonstration (*FAA policies which apply to sec. 4b.173*)	4b.173–1	61
Ground handling characteristics with reverse thrust (*FAA policies which apply to sec. 4b.173*)	4b.173–2	62

Water Handling Characteristics

Water conditions	**4b.180**	62
Water handling qualities (*FAA policies which apply to sec. 4b.180*)	4b.180–1	62
Wind conditions	**4b.181**	62
Crosswind demonstration (*FAA policies which apply to sec. 4b.181*)	4b.181–1	62
Control and stability on the water	**4b.182**	62
Procedure for demonstrating control and stability on the water (*FAA policies which apply to sec. 4b.182*)	4b.182–1	62
Control and stability on the water with reverse thrust (*FAA policies which apply to sec. 4b.182*)	4b.182–2	63

Miscellaneous Flight Requirements

	Section	Page
Flutter and vibration	4b.190	63
Determination of flutter and vibration qualities during dive (*FAA policies which apply to sec. 4b.190*)	4b.190–1	63

Subpart C—Structure

General

Loads	4b.200	64
Strength and deformation	4b.201	64
Proof of structure	4b.202	64

Flight Loads

General	4b.210	64
Flight envelopes	4b.211	65
Effect of high lift devices	4b.212	68
Symmetrical flight conditions	4b.213	68
Rolling conditions	4b.214	69
Yawing conditions	4b.215	70
Supplementary flight conditions	4b.216	71
Speed control devices	4b.217	71

Control Surface and System Loads

Control surface loads; general	4b.220	72
Wing flaps	4b.221	73
Tabs	4b.222	73
Special devices	4b.223	73
Primary flight control systems	4b.224	73
Dual primary flight control systems	4b.225	73
Ground gust conditions	4b.226	73
Secondary control systems	4b.227	74

Ground Loads

General	4b.230	74
Level landing conditions	4b.231	75
Tail-down landing conditions	4b.232	76
One-wheel landing condition	4b.233	76
Lateral drift landing condition	4b.234	76
Rebound landing condition	4b.234a	76
Ground handling conditions	4b.235	76
Unsymmetrical loads on multiple-wheel units	4b.236	80

Water Loads

General	4b.250	81
Water loads—alternate standards (*FAA policies which apply to sec. 4b.250*)	4b.250–1	81
Design weights and center of gravity positions	4b.251	81
Application of loads	4b.252	81
Hull and main float load factors	4b.253	81
Hull and main float landing conditions	4b.254	82

	Section	Page
Hull and main float take-off condition	4b.255	82
Hull and main float bottom pressures	4b.256	84
Auxiliary float loads	4b.257	85
Seawing loads	4b.258	86
Emergency Landing Conditions		
General	4b.260	86
Structural ditching provisions	4b.261	87
Fatigue Evaluation		
General	4b.270	87
Flight structure for fatigue evaluation (*FAA policies which apply to sec. 4b.270*)	4b.270–1	88
Fatigue evaluation, general (*FAA policies which apply to sec. 4b.270*)	4b.270–2	88
Subpart D—Design and Construction		
Scope	4b.300	88
Turnbuckle safetying (*FAA policies which apply to sec. 4b.300*)	4b.300–1	88
Materials	4b.301	88
Acceptability of materials (*FAA policies which apply to sec. 4b.301*)	4b.301–1	88
Fabrication methods	4b.302	88
Standard fastenings	4b.303	88
Protection	4b.304	88
Inspection provisions	4b.305	88
Material strength properties and design values	4b.306	88
Material strength properties (*FAA policies which apply to sec. 4b.306 (c)*)	4b.306–1	89
Special factors	4b.307	89
Flutter, deformation, and vibration	4b.308	90
Control Surfaces		
General	4b.310	90
Proof of strength	4b.311	90
Installation	4b.312	91
Hinges	4b.313	91
Control Systems		
General	4b.320	91
Two-control airplanes	4b.321	91
Trim controls and systems	4b.322	91
Wing flap controls	4b.323	92
Wing flap interconnection	4b.324	92
Procedure for demonstrating wing flaps that are not interconnected (*FAA policies which apply to sec. 4b.324 (a)*)	4b.324–1	92
Control system stops	4b.325	92
Control system locks	4b.326	92
Static tests	4b.327	93
Operation tests	4b.328	93
Control system details; general	4b.329	93
Installation of turnbuckles (*FAA policies which apply to sec. 4b.329 (a)*)	4b.329–1	93
Safetying of turnbuckles (*FAA policies which apply to sec. 4b.329*)	4b.329–2	94
Approval of control system components (*FAA policies which apply to sec. 4b.329 (a)*)	4b.329–3	94
Cable terminals (*FAA policies which apply to sec. 4b.329 (a)*)	4b.329–4	94
Bellcrank and idler installation (*FAA policies which apply to sec. 4b.329 (b)*)	4b.329–5	94
Ball and roller bearings (*FAA policies which apply to sec. 4b.329 (b) (3)*)	4b.329–6	95

Landing Gear

	Section	Page
General	**4b.330**	95
Shock absorbers	**4b.331**	95
Landing gear tests	**4b.332**	95
Limit load factor determination	**4b.333**	96
Retracting mechanism	**4b.334**	96
Procedure for testing landing gear retracting system (*FAA policies which apply to sec. 4b.334*)	4b.334–1	96
Landing gear position indicator switches (*FAA interpretations which apply to sec. 4b.334 (e)*)	4b.334–2	97
Wheels	**4b.335**	97
Tires	**4b.336**	98
Brakes	**4b.337**	98
Brake tests (*FAA policies which apply to sec. 4b.337*)	4b.337–1	99
Brake systems (*FAA policies which apply to sec. 4b.337*)	4b.337–2	99
Replacement or modified brakes (*FAA policies which apply to sec. 4b.337*)	4b.337–3	100
Antiskid devices and installations (*FAA policies which apply to sec. 4b.337*)	4b.337–4	102
Skis	**4b.338**	104

Hulls and Floats

General	**4b.340**	104
Seaplane main floats	**4b.341**	104
Boat hulls	**4b.342**	104

Personnel and Cargo Accommodations

Pilot compartment; general	**4b.350**	104
Noise and vibration characteristics (*FAA policies which apply to sec. 4b.350 (g)*)	4b.350–1	105
Pilot compartment vision	**4b.351**	105
Procedure for demonstrating pilot compartment visibility (*FAA policies which apply to sec. 4b.351*)	4b.351–1	105
Vision with reverse thrust (*FAA policies which apply to sec. 4b.351*)	4b.351–2	105
Minimum area of visibility in the flight crew compartment (*FAA policies which apply to sec. 4b.351 (a)*)	4b.351–3	105
Windshield and windows	**4b.352**	105
Controls	**4b.353**	105
Control tests (*FAA policies which apply to sec. 4b.353*)	4b.353–1	107
Instrument arrangement	**4b.354**	107
Instrument marking	**4b.355**	108
Doors	**4b.356**	108
External doors (*FAA policies which apply to sec. 4b.356*)	4b.356–1	109
Auxiliary latching devices (*FAA policies which apply to sec. 4b.356 (b)*)	4b.356–2	109
Power operated external doors (*FAA policies which apply to sec. 4b.356 (b)*)	4b.356–3	109
Means for safeguarding against inadvertent opening in flight (*FAA policies which apply to sec. 4b.356 (b)*)	4b.356–4	109
Direct visual inspection (*FAA policies which apply sec. 4b.356 (e)*)	4b.356–5	110
Visual indicating system (*FAA policies which apply to sec. 4b.356 (e)*)	4b.356–6	110
Door louvres	**4b.357**	110
Seats, berths, and safety belts	**4b.358**	110
Application of loads (*FAA policies which apply to sec. 4b.358*)	4b.358–1	111
Cargo and baggage compartments	**4b.359**	111

Emergency Provisions

General	**4b.360**	111
Ditching	**4b.361**	111

	Section	Page
Emergency evacuation	**4b.362**	112
Flight crew emergency exits (*FAA policies which apply to sec. 4b.362 (a)*)	4b.362–1	114
Step-down distance (*FAA interpretations which apply to sec. 4b.362 (b)*)	4b.362–2	115
Number of passengers (*FAA policies which apply to sec. 4b.362 (c)*)	4b.362–3	115
Emergency exit design descent means (*FAA policies which apply to sec. 4b.362 (e) (7)*)	4b.362–4	115
Emergency exit marking (*FAA policies which apply to sec. 4b.362 (f)*)	4b.362–5	115
Emergency exit access (*FAA policies which apply to sec. 4b.362 (g)*)	4b.362–6	115
Width of main aisle (*FAA policies which apply to sec. 4b.362 (h)*)	4b.362–7	116
Ventilation, Heating, and Pressurization		
General	**4b.370**	116
Ventilation	**4b.371**	116
Carbon monoxide detection (*FAA policies which apply to sec. 4b.371*)	4b.371–1	117
Heating systems	**4b.372**	117
Combustion heaters equipped with carbon dioxide fire extinguishers (*FAA policies which apply to sec. 4b.372*)	4b.372–1	117
Pressurized cabins; general	**4b.373**	117
Pressure equipment and supply	**4b.374**	117
Pressure control	**4b.375**	117
Warning indication (*FAA policies which apply to sec. 4b.375 (f)*)	4b.375–1	117
Tests	**4b.376**	117
Fire Protection		
General	**4b.380**	118
Protective breathing equipment (*FAA policies which apply to sec. 4b.380 (c)*)	4b.380–1	118
Approved hand fire extinguishers (*FAA policies which apply to sec. 4b.380 (a)*)	4b.380–2	118
Cabin interiors	**4b.381**	119
Hand fire extinguishers for cabin interiors (*FAA policies which apply to sec. 4b.381 (e) and (f)*)	4b.381–1	119
Cargo and baggage compartments	**4b.382**	120
Cargo compartment classification	**4b.383**	120
Proof of compliance	**4b.384**	121
Cargo and baggage compartments equipped with carbon dioxide fire extinguishers (*FAA policies which apply to sec. 4b.384*)	4b.384–1	121
Flammable fluid fire protection	**4b.385**	121
Combustion heater fire protection	**4b.386**	123
Miscellaneous		
Reinforcement near propellers	**4b.390**	123
Leveling marks	**4b.391**	123
Subpart E—Powerplant Installation		
General	**4b.400**	123
Engine and propeller operation (*FAA policies which apply to sec. 4b.400*)	4b.400–1	123
Powerplant installation components (*FAA interpretations which apply to sec. 4b.400*)	4b.400–2	
Engines	**4b.401**	123
Approval of automatic propeller feathering system (*FAA policies which apply to sec. 4b.401 (c)*)	4b.401–1	124
Propeller feathering system operational tests (*FAA policies which apply to sec. 4b.401 (c)*)	4b.401–2	124
Continued rotation of turbine engines (*FAA policies which apply to sec. 4b.401 (c)*)	4b.401–3	125
Engine operation with automatic propeller control system installed (*FAA policies which apply to sec. 4b.401 (b)*)	4b.401–4	125

	Section	Page
Propellers	4b.402	125
Reverse thrust propeller installations (*FAA policies which apply to sec. 4b.402*)	4b.402–1	126
Propeller vibration	4b.403	127
Propeller pitch and speed limitations	4b.404	127
Propeller clearance	4b.405	127
Propeller de-icing provisions	4b.406	127
Fluid type propeller de-icing test (*FAA policies which apply to sec. 4b.406*)	4b.406–1	127
Reversing systems	4b.407	127
Investigation of propeller systems which produce negative thrust (*FAA policies which apply to sec. 4b.407*)	4b.407–1	128
Turbo-propeller-drag limiting systems	4b.408	128
Turbine powerplant operating characteristics	4b.409	128

Fuel System Operation and Arrangement

General	4b.410	128
Fuel system independence	4b.411	128
Pressure cross-feed arrangements	4b.412	128
Fuel flow demonstration	4b.413	129
Transfer systems	4b.415	129
Determination of unusable fuel supply and fuel system operation on low fuel	4b.416	129
Unusable fuel (*FAA interpretations which apply to sec. 4b.416*)	4b.416–1	130
Determination of unusable fuel supply and fuel system operation (*FAA policies which apply to sec. 4b.416*)	4b.416–2	130
Fuel system hot weather operation	4b.417	130
Hot weather fuel system tests (*FAA policies which apply to sec. 4b.417*)	4b.417–1	131
Flow between interconnected tanks	4b.418	132
Determination of fuel flow between interconnected tanks (*FAA policies which apply to sec. 4b.418*)	4b.418–1	132

Fuel System Construction and Installation

General	4b.420	132
Minimum quantity of antidetonant fluid required (*FAA policies which apply to sec. 4b.420 (e)*)	4b.420–1	132
Fuel tank tests	4b.421	133
Fuel tank installation	4b.422	134
Fuel tank expansion space	4b.423	134
Fuel tank sump	4b.424	134
Fuel tank filler connection	4b.425	134
Fuel tank vents and carburetor vapor vents	4b.426	134
Determination of syphoning of fuel system vents (*FAA policies which apply to sec. 4b.426*)	4b.426–1	135
Fuel tank outlet	4b.427	135
Under-wing fueling provisions	4b.428	135

Fuel System Components

Fuel pumps	4b.430	135
Fuel injection pump (*FAA interpretations which apply to sec. 4b.430*)	4b.430–1	135
Fuel system lines and fittings	4b.432	136
Fuel lines and fittings in designated fire zones	4b.433	136
Fuel valves	4b.434	136
Fuel strainer or filter	4b.435	136
Fuel system drains	4b.436	136
Fuel jettisoning system	4b.437	136
Test procedure for fuel jettisoning (*FAA policies which apply to sec. 4b.437*)	4b.437–1	137

Oil System

	Section	Page
General	4b.440	138
Procedure for demonstrating oil cooling (*FAA policies which apply to sec. 4b.440 (e)*)	4b.440–1	139
Oil tank construction	4b.441	139
Oil tank tests	4b.442	139
Oil tank installation	4b.443	139
Oil lines and fittings	4b.444	139
Oil valves	4b.445	140
Oil radiators	4b.446	140
Oil filters	4b.447	140
Oil system drains	4b.448	140
Propeller feathering system	4b.449	140
Procedure for demonstrating propeller feathering (*FAA policies which apply to sec. 4b.449*)	4b.449–1	140

Cooling System

General	4b.450	140
Cooling with reverse thrust (*FAA policies which apply to sec. 4b.450*)	4b.450–1	140
Cooling tests	4b.451	140
Climb cooling test procedure	4b.452	141
Procedure for demonstrating cooling climb (*FAA policies which apply to sec. 4b.452*)	4b.452–1	141
Take-off cooling test procedure	4b.453	142
Procedure for demonstrating takeoff cooling (*FAA policies which apply to sec. 4b.453*)	4b.453–1	142
Cooling test procedure for flying boat operation	4b.454	143
Procedure for demonstrating cooling for seaplanes during water taxiing operations (*FAA policies which apply to sec. 4b.454*)	4b.454–1	143
Cooling of turbine engine installations	4b.455	143

Induction and Exhaust Systems

General	4b.460	143
Induction system de-icing and anti-icing provisions	4b.461	143
Procedure for demonstrating carburetor air heat rise (*FAA policies which apply to sec. 4b.461 (b)*)	4b.461–1	144
Carburetor air preheater design	4b.462	144
Induction system ducts	4b.463	144
Induction system screens	4b.464	144
Carburetor air cooling	4b.465	144
Procedure for demonstrating carburetor air cooling (*FAA policies which apply to sec. 4b.465*)	4b.465–1	145
Inter-coolers and after-coolers	4b.466	145
Exhaust system and installation components	4b.467	145
Carbon monoxide detection (*FAA policies which apply to sec. 4b.467 (a) (1) and (d)*)	4b.467–1	146
Determination of exhaust gas interference with visibility (*FAA policies which apply to sec. 4b.467 (a) (5)*)	4b.467–2	146

Powerplant Controls and Accessories

Powerplant controls; general	4b.470	146
Throttle and A. D. I. system controls	4b.471	147
Ignition switches	4b.472	147
Mixture controls	4b.473	147
Propeller controls	4b.474	147
Propeller feathering pump motors, intermittent duty type (*FAA policies which apply to sec. 4b.474 (b)*)	4b.474–1	147
Reverse thrust controls	4b.474a	147
Fuel system controls	4b.475	148

	Section	Page
Carburetor air preheat controls	4b.476	148
Supercharger controls	4b.476a	148
Powerplant accessories	4b.477	148
Engine ignition systems	4b.478	148

Powerplant Fire Protection

Designated fire zones	4b.480	148
Flammable fluids	4b.481	149
Shut-off means	4b.482	149
Lines and fittings	4b.483	149
Fire extinguisher systems	4b.484	149
Determination of carbon dioxide concentration in flight crew compartments (*FAA policies which apply to sec. 4b.484 (b)*)	4b.484–1	150
Fire detector systems	4b.485	151
Fire detector test circuit (*FAA policies which apply to sec. 4b.485 (c)*)	4b.485–1	151
Fire walls	4b.486	151
Cowling and nacelle skin	4b.487	152
Engine accessory section diaphragm	4b.488	152
Drainage and ventilation of fire zones	4b.489	152
Protection of other airplane components against fire	4b.490	152

Subpart F—Equipment

General

Scope	4b.600	153
Functional and installational requirements	4b.601	153
Required basic equipment	4b.602	153
Flight and navigational instruments	4b.603	153
Powerplant instruments	4b.604	153
Miscellaneous equipment	4b.605	154
Equipment, systems, and installations	4b.606	154
Safety criteria for electric utilization systems (*FAA policies which apply to sec. 4b.606 (a) and (b)*)	4b.606–1	154
Installation of flight recorders (*FAA policies which apply to sec. 4b.606*)	4b.606–2	155

Instruments; Installation

General	4b.610	156
Arrangement and visibility of instrument installations	4b.611	156
Procedure for checking arrangement and visibility of instrument installations (*FAA policies which apply to sec. 4b.611*)	4b.611–1	156
Flight and navigational instruments	4b.612	156
Airspeed indicating system calibration (*FAA policies which apply to sec. 4b.612 (a)*)	4b.612–1	158
Static air vent system (*FAA policies which apply to sec. 4b.612 (b)*)	4b.612–2	159
Calibration of magnetic direction indicator (*FAA policies which apply to sec. 4b.612 (c)*)	4b.612–3	159
Automatic pilot systems (*FAA policies which apply to sec. 4b.612 (d)*)	4b.612–4	159
Connection of additional instruments to duplicate instrument system (*FAA policies which apply to sec. 4b.612 (f)*)	4b.612–5	161
Powerplant instruments	4b.613	161

Electrical Systems and Equipment

General	4b.620	162
Electrical system capacity	4b.621	162
Generating system	4b.622	162
Generating system reliability (*FAA policies which apply to sec. 4b.622 (b)*)	4b.622–1	162

	Section	Page
Distribution system	**4b.623**	163
Electrical protection	**4b.624**	163
Automatic reset circuit breaker (*FAA policies which apply to sec. 4b.624*)	4b.624–1	163
Electrical equipment and installation	**4b.625**	164
Environmental tests for electrical equipment (*FAA policies which apply to sec. 4b.625 (a)*)	4b.625–1	164
Electrical system fire and smoke protections	**4b.626**	165
Fire-resistant electrical equipment (*FAA policies which apply to sec. 4b.626*)	4b.626–1	165
Electrical system tests and analyses	**4b.627**	165
Lightning strike protection	**4b.628**	165
Lights		
Instrument lights	**4b.630**	165
Landing lights	**4b.631**	165
Position light system installation	**4b.632**	165
Red passing lights (*FAA policies which apply to sec. 4b.632 (a)*)	4b.632–1	166
Position light system dihedral angles	**4b.633**	166
Position light distribution and intensities	**4b.634**	166
Overlaps between high intensity forward position lights (*FAA policies which apply to sec. 4b.634 (b) (3)*)	4b.634–1	167
Position light color specifications	**4b.635**	167
Riding light	**4b.636**	167
Anti-collision light	**4b.637**	167
Safety Equipment		
Ice protection	**4b.640**	177
Hand fire extinguishers	**4b.641**	177
Flare installation	**4b.642**	177
Procedure for testing flare ejection (*FAA policies which apply to sec. 4b.642 (b)*)	4b.642–1	177
Safety belts	**4b.643**	177
Safety belt signal	**4b.644**	177
Ditching equipment	**4b.645**	177
Stowage of safety equipment	**4b.646**	178
Flotation means	**4b.647**	178
Miscellaneous Equipment		
Radio and electronic equipment	**4b.650**	178
Oxygen equipment and supply	**4b.651**	178
Safety precautions (*FAA policies which apply to sec. 4b.651 (a)*)	4b.651–1	181
Protective breathing equipment (*FAA policies which apply to sec. 4b.651 (h)*)	4b.651–2	181
Supplemental breathing equipment (*FAA policies which apply to sec. 4b.651*)	4b.651–3	181
Design considerations for fixed systems (*FAA policies which apply to sec. 4b.651*)	4b.651–4	182
Portable walk-around oxygen units (*FAA policies which apply to sec. 4b.651*)	4b.651–5	182
Oxygen pressure gage (*FAA policies which apply to sec. 4b.651 (a)*)	4b.651–6	183
Supply required for continuous flow supplementary breathing systems (*FAA policies which apply to sec. 4b.651 (b)*)	4b.651–7	183
Supply required for diluter-demand system (*FAA policies which apply to sec. 4b.651*)	4b.651–8	183
Requirements for approval of oxygen systems (*FAA policies which apply to sec. 4b.651 (b)*)	4b.651–9	184
Means for determining oxygen flow to crew members (*FAA policies which apply to sec. 4b.651 (e)*)	4b.651–10	184
Means for determining oxygen flow to passengers (*FAA policies which apply to sec. 4b.651 (e)*)	4b.651–11	185
Types of flow indicators (*FAA policies which apply to sec. 4b.651 (e)*)	4b.651–12	185

	Section	Page
Engine-driven accessories	4b.652	185
Hydraulic systems; strength	4b.653	186
Hydraulic systems; design	4b.654	186
Hydraulic system fire protection	4b.655	186
Vacuum systems	4b.658	186
Equipment incorporating high energy rotors	4b.659	186
Draining of fluids subject to freezing	4b.660	186

Subpart G—Operating Limitations and Information

General

Scope	4b.700	186
Automatic propeller feathering operating limitations and information *(FAA policies which apply to sec. 4b.700)*	4b.700–1	187

Operating Limitations

Air-speed limitations; general	4b.710	187
Never-exceed speed V_{NE}	4b.711	187
Normal operating limit speed V_{NO}	4b.712	187
Maneuvering speed	4b.713	187
Flap extended speed V_{FE}	4b.714	187
Landing gear operating speed V_{LO}	4b.715	188
Landing gear extended speed V_{LE}	4b.716	188
Minimum control speed V_{MC}	4b.717	188
Powerplant limitations	4b.718	188
Powerplant limitations governing minimum quantity of antidetonant fluid required for takeoff *(FAA policies which apply to sec. 4b.718)*	4b.718–1	188
Airplane weight, center of gravity, and weight distribution limitations	4b.719	188
Minimum flight crew	4b.720	188
Types of operation	4b.721	188
Maximum operating altitude	4b.722	189
Maneuvering flight load factors	4b.723	189

Markings and Placards

General	4b.730	189
Reverse thrust placards *(FAA policies which apply to sec. 4b.730)*	4b.730–1	189
Instrument markings; general	4b.731	189
Air-speed limitation information	4b.732	189
Magnetic direction indicator	4b.733	189
Powerplant instruments; general	4b.734	189
Oil quantity indicators	4b.735	189
Fuel quantity indicator	4b.736	189
Control markings; general	4b.737	189
Miscellaneous markings and placards	4b.738	190

Airplane Flight Manual

General	4b.740	190
Preparation of airplane flight manuals for aircraft certificated in the transport category *(FAA policies which apply to sec. 4b.740)*	4b.740–1	190
Reverse thrust operating limitations and procedures *(FAA policies which apply to sec. 4b.740)*	4b.740–2	199
Operating limitations	4b.741	199
Operating procedures	4b.742	200
Performance information	4b.743	200

Airplane Identification Data

	Section	Page
Identification plate	**4b.750**	201
Identification marks	**4b.751**	201

Appendixes

Summary of Appendixes ---- 203

Appendix A

FIGURE 1.—Weight—c. g. positions ---- 205
FIGURE 2.—Wind gradient correction ---- 206
FIGURE 3.—Static longitudinal stability requirements ---- 207
FIGURE 4.—Altimeter position error ---- 208
FIGURE 5.—Turnbuckle safety wiring ---- 209
FIGURE 6.—Reference eye position ---- 210
FIGURE 7.—Clear areas of vision ---- 211
FIGURE 8.—Obstruction to vision ---- 212
FIGURE 9.—Measurement of angles ---- 213

Appendix B

List of tests normally required to show compliance with the Regulations ---- 215

Appendix C

Sample of typical flight test programs to substantiate changes in airplane configuration ---- 225

Appendix D

A General Order of Testing ---- 227

Appendix E

A guide to facilitate the development of a flight test schedule ---- 229

Appendix F

Tests requiring special instrumentation and a description of pertinent instruments ---- 231

Appendix G

Special Civil Air Regulations which affect Part 4b ---- 233

SR–389B.	**Emergency Exits for Airplanes Carrying Passengers for Hire**	235
	Amendment No. 1 to SR–389B	239
SR–392B.	**Facilitation of Experiments with Exterior Lighting Systems**	241
[SR–403A.	**Certification and Operation of Certain Airplanes for the Department of the Interior in the Trust Territory of the Pacific Islands]**	243
SR–406C.	**Application of Transport Category Requirements to C–46 Type Airplanes**	245
SR–407.	**Basis for Approval of Modification of Airplane Types Douglas DC–3 and Lockheed L–18**	249
SR–411A.	**Trial Operation of Transport Category Airplanes in Cargo Service at Increased Zero Fuel and Landing Weights**	255
SR–422.	**Turbine-Powered Transport Category Airplanes of Current Design**	259
SR–422A.	**Turbine-Powered Transport Category Airplanes of Current Design**	273
SR–422B.	**Turbine-Powered Transport Category Airplanes of Current Design**	293

Page

SR–423. Type Certification of Transport Category Airplanes With Turbo-Prop Replacements 311

[SR–425C. Provisional Certification and Operation of Aircraft] 315

SR–426. Performance Credit for Transport Category Airplanes Equipped with Standby Power 325

Appendix H

Fatigue Evaluation of Flight Structure 331

Appendix I

Environmental Test Procedures—Electrical Equipment 337

Airplane Airworthiness; Transport Categories

Subpart A—General

Applicability and Definitions

4b.0 *Applicability of this part.* This part establishes standards with which compliance shall be demonstrated for the issuance of and changes to type certificates for transport category airplanes. This part, until superseded or rescinded, shall apply to all transport category airplanes for which applications for type certification in the transport category are made after the effective date of this part (November 9, 1945).

4b.1 *Definitions.* As used in this part terms are defined as follows:

(a) *Administration.*

(1) *Administrator.* The Administrator is the Administrator of the Federal Aviation Agency.

(2) *Applicant.* An applicant is a person or persons applying for approval of an airplane or any part thereof.

(3) *Approved.* Approved, when used alone or as modifying terms such as means, devices, specifications, etc., shall mean approved by the Administrator. (See sec. 4b.18.)

(b) *General design.*

(1) *Standard atmosphere.* The standard atmosphere is an atmosphere (see NACA Technical Report 1235) defined as follows:

(i) The air is a dry, perfect gas,

(ii) The temperature at sea level is 59°F.,

(iii) The pressure at sea level is 29.92 inches Hg,

(iv) The temperature gradient from sea level to the altitude at which the temperature equals —69.7° F. is —0.003566° F./ft. and zero thereabove,

(v) The density ρ_0 at sea level under the above conditions is 0.002377 pounds sec.^{2}/ft.^{4}.

(2) *Maximum anticipated air temperature.* The maximum anticipated air temperature is a temperature specified for the purpose of compliance with the powerplant cooling standards. (See sec. 4b.451 (b).)

(3) *Airplane configuration.* Airplane configuration is a term referring to the position of the various elements affecting the aerodynamic characteristics of the airplane (e. g., wing flaps, landing gear).

(4) *Aerodynamic coefficients.* Aerodynamic coefficients are nondimensional coefficients for forces and moments. They correspond with those adopted by the National Aeronautics and Space Administration (formerly the National Advisory Committee for Aeronautics)".

(5) *Critical engine(s).* The critical engine is that engine(s) the failure of which gives the most adverse effect on the airplane flight characteristics relative to the case under consideration.

(6) *Critical-engine-failure speed.* The critical-engine-failure speed is the airplane speed used in the determination of the take-off at which the critical engine is assumed to fail. (See sec. 4b.114.)

(7) *Continuous maximum icing.* The maximum continuous intensity of atmospheric icing conditions is defined by the variables of the cloud liquid water content, the mean effective diameter of the cloud droplets, the ambient air temperature, and the inter-relationship of these three variables as shown in figure 4b–24a. The limiting icing envelope in terms of altitude and temperature is given in figure 4b–24b. The inter-relationship of cloud liquid water content with drop diameter and altitude is determined from figures 4b–24a and 4b–24b. The cloud liquid water content for continuous maximum icing conditions of a horizontal extent other than twenty miles is determined by the value of liquid water content of figure 4b–24a multiplied by the appropriate factor from figure 4b–24c. (See sec. 4b.640.)

(8) ***Intermittent maximum icing.*** The intermittent maximum intensity of atmospheric icing conditions is defined by the variables of the cloud liquid water content, the mean effective diameter of the cloud droplets, the ambient air temperature, and the inter-relationship of these three variables as shown in figure 4b–25a. The limiting icing envelope in terms of altitude and temperature is given in figure 4b–25b. The inter-relationship of cloud liquid water content with drop diameter and altitude is determined from figures 4b–25a and 4b–25b. The cloud liquid water content for intermittent maximum icing conditions of a horizontal extent other than three miles is determined by the value of cloud liquid water content of figure 4b–25a multiplied by the appropriate factor in figure 4b–25c. (See sec. 4b.640.)

NOTE: There is some indication that the upper altitude limit might extend to 30,000 feet pressure altitude, and the lower limit of ambient temperature may be as low as −40° F. Because of this, the portions in this region of figures 4b–25a and 4b–25b are shown by dashed lines.

(c) ***Weights.***

(1) ***Maximum weight.*** The maximum weight of the airplane is that maximum at which compliance with the requirements of this part is demonstrated. (See sec. 4b.101 (a).)

(2) ***Minimum weight.*** The minimum weight of the airplane is that minimum at which compliance with the requirements of this part is demonstrated. (See sec. 4b.101 (c).)

(3) ***Empty weight.*** The empty weight of the airplane is a readily reproducible weight which is used in the determination of the operating weights. (See sec. 4b.104.)

(4) ***Design maximum weight.*** The design maximum weight is the maximum weight of the airplane used in structural design for flight load conditions. (See sec. 4b.210.)

(5) ***Design minimum weight.*** The design minimum weight is the minimum weight of the airplane at which compliance is shown with the structural loading conditions. (See sec. 4b.210.)

(6) ***Design take-off weight.*** The design take-off weight is the maximum airplane weight used in structural design for taxiing conditions, and for landing conditions at a reduced velocity of descent. (See sec. 4b.210.)

(7) ***Design landing weight.*** The design landing weight is the maximum airplane weight used in structural design for landing conditions at the maximum velocity of descent. (See sec. 4b.230 (b).)

(8) ***Zero fuel weight.*** The zero fuel weight is the design maximum weight of the airplane with no disposable fuel and oil.

(9) ***Design unit weight.*** The design unit weight is a representative weight used to show compliance with the structural design requirements.

(i) Gasoline 6 pounds per U. S. gallon.

(ii) Lubricating oil 7.5 pounds per U. S. gallon.

(iii) Crew and passengers 170 pounds per person.

(d) ***Speeds.***

(1) IAS: Indicated airspeed is equal to the pitot static airspeed indicator reading as installed in the airplane without correction for airspeed indicator system errors but including the sea level standard adiabatic compressible flow correction. (This latter correction is included in the calibration of the airspeed instrument dials.) (See secs. 4b.612 (a) and 4b.710.)

(2) CAS: Calibrated airspeed is equal to the airspeed indicator reading corrected for position and instrument error. (As a result of the sea level adiabatic compressible flow correction to the airspeed instrument dial, CAS is equal to the true airspeed TAS in standard atmosphere at sea level.)

(3) EAS: Equivalent airspeed is equal to the airspeed indicator reading corrected for position error, instrument error, and for adiabatic compressible flow for the particular altitude. (EAS is equal to CAS at sea level in standard atmosphere.)

(4) TAS: True airspeed of the airplane relative to undisturbed air. ($TAS = EAS(\rho_0/\rho^{1/2}$.)

(5) V_A: The design maneuvering speed. (See sec. 4b.210 (b) (2).)

(6) V_B: The design speed for maximum gust intensity. (See sec. 4b.210 (b) (3).)

(7) V_C: The design cruising speed. (See sec. 4b.210 (b) (4).)

(8) V_D: The design diving speed. (See sec. 4b.210 (b) (5).)

(9) V_{DE}: The demonstrated flight diving speed. (See sec. 4b.190.)

(10) V_F: The design flap speed for flight loading conditions with wing flaps in the landing position. (See sec. 4b.210 (b) (1).)

(11) V_{FE}: The flap extended speed is a maximum speed with wing flaps in a prescribed extended position. (See sec. 4b.714.)

(12) V_{LE}: The landing gear extended speed is the maximum speed at which the airplane can be flown safely with the landing gear extended. (See sec. 4b.716.)

(13) V_{LO}: The landing gear operating speed is a maximum speed at which the landing gear can be raised or lowered safely. (See sec. 4b.715.)

(14) V_{MC}: The minimum control speed with the critical engine inoperative. (See sec. 4b.133.)

(15) V_{NE}: The never-exceed speed. (See sec. 4b.711.)

(16) V_{NO}: The normal operating limit speed. (See sec. 4b.712.)

(17) V_{S_0}: The stalling speed or the minimum steady flight speed with wing flaps in the landing position. (See secs. 4b.112 (a) and 4b.160.)

(18) V_{S_1}: The stalling speed or the minimum steady flight speed obtained in a specified configuration. (See sec. 4b.112 (b).)

(19) V_1: The critical-engine-failure speed. (See sec. 4b.114.)

(20) V_2: The take-off safety speed. (See sec. 4b.114 (b).)

(21) M: Mach number is the ratio of true airspeed to the speed of sound.

(e) *Structural.*

(1) *Limit load.* A limit load is the maximum load anticipated in normal conditions of operation. (See sec. 4b.200.)

(2) *Ultimate load.* An ultimate load is a limit load multiplied by the appropriate factor of safety. (See sec. 4b.200.)

(3) *Factor of safety.* The factor of safety is a design factor used to provide for the possibility of loads greater than those anticipated in normal conditions of operation and for uncertainties in design. (See sec. 4b.200 (a).)

(4) *Load factor.* The load factor is the ratio of a specified load to the total weight of the airplane; the specified load may be expressed in terms of any of the following: aerodynamic forces, inertia forces, or ground or water reactions.

(5) *Limit load factor.* The limit load factor is the load factor corresponding with limit loads.

(6) *Ultimate load factor.* The ultimate load factor is the load factor corresponding with ultimate loads.

(7) *Checked pitching maneuver.* A checked pitching maneuver is one in which the pitching control is suddenly displaced in one direction and then suddenly moved in the opposite direction, the deflections and timing being such as to avoid exceeding the limit maneuvering load factor.

(8) *Design wing area.* The design wing area is the area enclosed by the wing outline (including wing flaps in the retracted position and ailerons, but excluding fillets or fairings) on a surface containing the wing chords. The outline is assumed to be extended through the nacelles and fuselage to the plane of symmetry in any reasonable manner.

(9) *Balancing tail load.* A balancing tail load is that load necessary to place the airplane in equilibrium with zero pitch acceleration.

(10) *Fitting.* A fitting is a part or terminal used to join one structural member to another. (See sec. 4b.307 (c).)

(f) *Powerplant installation.* [1]

[1] For engine airworthiness requirements see Part 13 of this subchapter; for propeller airworthiness requirements see Part 14 of this subchapter.

(1) *Brake horsepower.* Brake horsepower is the power delivered at the propeller shaft of the engine.

(2) *Take-off power or thrust.*

(i) Take-off power for reciprocating engines is the brake horsepower developed under standard sea level conditions and under the maximum conditions of crankshaft rotational speed and engine manifold pressure approved for the normal take-off, and limited in use to a maximum continuous period as indicated in the approved engine specification.

(ii) Take-off power for turbine engines is the brake horsepower developed under static conditions at specified altitudes and atmospheric temperatures and under the maximum conditions of rotor shaft rotational speed and

gas temperature approved for the normal take-off, and limited in use to a maximum continous period as indicated in the approved engine specification.

(iii) Take-off thrust for turbine engines is the jet thrust developed under static conditions at specified altitudes and atmospheric temperatures and under the maximum conditions of rotor shaft rotational speed and gas temperature approved for the normal take-off, and limited in use to a maximum continuous period as indicated in the approved engine specification.

(3) *Maximum continuous power or thrust.*

(i) Maximum continous power for reciprocating engines is the brake horsepower developed in standard atmosphere at a specified altitude and under the maximum conditions of crankshaft rotational speed and engine manifold pressure, and approved for use during periods of unrestricted duration.

(ii) Maximum continuous power for turbine engines is the brake horsepower developed at specified altitudes, atmospheric temperatures, and flight speeds and under the maximum conditions of rotor shaft rotational speed and gas temperature, and approved for use during periods of unrestricted duration.

(iii) Maximum continuous thrust for turbine engines is the jet thrust developed at specified altitudes, atmospheric temperatures, and flight speeds and under the maximum conditions of rotor shaft rotational speed and gas temperature, and approved for use during periods of unrestricted duration.

(4) *Gas temperature.* Gas temperature for turbine engines is the temperature of the gas stream obtained as indicated in the approved engine specification.

(5) *Manifold pressure.* Manifold pressure is the absolute pressure measured at the appropriate point in the induction system, usually in inches of mercury.

(6) *Critical altitude.* The critical altitude is the maximum altitude at which in standard atmosphere it is possible to maintain, at a specified rotational speed, a specified power or a specified manifold pressure. Unless otherwise stated, the critical altitude is the maximum altitude at which it is possible to maintain, at the maximum continuous rotational speed, one of the following:

(i) The maximum continuous power, in the case of engines for which this power rating is the same at sea level and at the rated altitude.

(ii) The maximum continuous rated manifold pressure, in the case of engines the maximum continuous power of which is governed by a constant manifold pressure.

(7) *Pitch setting.* Pitch setting is the propeller blade setting determined by the blade angle measured in a manner, and at a radius, specified in the instruction manual for the propeller.

(8) *Feathered pitch.* Feathered pitch is the pitch setting which in flight, with the engines stopped, gives approximately the minimum drag and corresponds with a windmilling torque of approximately zero.

(9) *Reverse pitch.* Reverse pitch is the propeller pitch setting for any blade angle used beyond zero pitch (e. g., the negative angle used for reverse thrust).

(g) *Fire protection.*

(1) *Fireproof.* Fireproof material means a material which will withstand heat at least as well as steel in dimensions appropriate for the purpose for which it is to be used. When applied to material and parts used to confine fires in designated fire zones, fireproof means that the material or part will perform this function under the most severe conditions of fire and duration likely to occur in such zones.

(2) *Fire-resistant.* When applied to sheet or structural members, fire-resistant material means a material which will withstand heat at least as well as aluminum alloy in dimensions appropriate for the purpose for which it is to be used. When applied to fluid-carrying lines, other flammable fluid system components, wiring, air ducts, fittings, and powerplant controls, this term refers to a line and fitting assembly, component, wiring or duct, or controls, which will perform the intended functions under the heat and other conditions likely to occur at the particular location.

(3) *Flame-resistant.* Flame-resistant material means material which will not support combustion to the point of propagating, beyond

safe limits, a flame after the removal of the ignition source.

(4) *Flash-resistant.* Flash-resistant material means material which will not burn violently when ignited.

(5) *Flammable.* Flammable pertains to those fluids or gases which will ignite readily or explode.

(h) *Miscellaneous.*

(1) *Supplemental breathing equipment.* Supplemental breathing equipment is equipment designed to supply the supplementary oxygen required to protect against anoxia at altitudes where the partial pressure of oxygen in ambient air is reduced. (See sec. 4b.651.)

(2) *Protective breathing equipment.* Protective breathing equipment is equipment designed to prevent the breathing of noxious gases which might be present as contaminants in the air within the airplane in emergency situations. (See sec. 4b.651.)

Certification

4b.10 *Eligibility for type certificates.* An airplane shall be eligible for type certification under the provisions of this part if it complies with the airworthiness provisions established by this part or if the Administrator finds that the provision or provisions not complied with are compensated for by factors which provide an equivalent level of safety: *Provided,* That the Administrator finds no feature or characteristic of the airplane which renders it unsafe for the transport category.

4b.10–1 *Approval of reverse thrust propellers (FAA policies which apply to sec. 4b.10).* A reverse thrust propeller is a design feature which is not fully covered in the Civil Air Regulations. When an airplane incorporates a reverse thrust propeller installation, it will be approved in accordance with the policies set forth in section 4b.402–1, provided it has no feature or characteristic which renders its use unsafe in transport category airplanes.

(20 F. R. 2277, Apr. 8, 1955, effective Apr. 30, 1955.)

4b.10–2 *Approval of automatic propeller feathering installations (FAA policies which apply to sec. 4b.10).* An automatic propeller feathering device is a design feature not specifically covered in the Civil Air Regulations. When an airplane incorporates an automatic feathering device, it will be acceptable under the provisions of section 4b.10 as providing an equivalent level of safety in showing compliance with sections 4b.115, 4b.116, 4b.120, and 4b.133 if it complies with policies prescribed in sections 4b.115–2, 4b.116–1, 4b.120–1, 4b.401–1, and 4b.700–1, and if there are no features or characteristics which make it unsafe for use on transport aircraft.

(19 F. R. 1817, Apr. 2, 1954, effective Apr. 2, 1954.)

4b.10–3 *Minimum quantity of anti-detonant fluid required (FAA policies which apply to sec. 4b.10).* The use of anti-detonant fluid in limited quantities as a supplemental fluid for takeoff power operations is a feature not specifically covered in the Civil Air Regulations. A system incorporating anti-detonant fluid will be acceptable under the provisions of section 4b.10 as providing a satisfactory level of safety from the standpoint of the quantity of fluid available if it complies with the policies contained in sections 4b.420–1 and 4b.718–1.

4b.11 *Designation of applicable regulations.* The provisions of this section shall apply to all airplane types certificated under this part irrespective of the date of application for type certificate.

(a) Unless otherwise established by the Board, the airplane shall comply with the provisions of this part together with all amendments thereto effective on the date of application for type certificate, except that compliance with later amendments may be elected or required pursuant to paragraphs (c), (d), and (e) of this section.

(b) If the interval between the date of application for type certificate and the issuance of the corresponding type certificate exceeds five years, a new application for type certificate shall be required, except that for applications pending on May 1, 1954, such five-year period shall commence on that date. At the option of the applicant, a new application may be filed prior to the expiration of the five-year period. In either instance the applicable regulations shall be those effective on the date of the new application in accordance with paragraph (a) of this section.

(c) During the interval between filing the application and the issuance of a type certifi-

cate, the applicant may elect to show compliance with any amendment of this part which becomes effective during that interval, in which case all other amendments found by the Administrator to be directly related shall be complied with.

(d) Except as otherwise provided by the Board, or by the Administrator pursuant to section 1.24 of this subchapter, a change to the type certificate (see sec. 4b.13 (b)) may be accomplished, at the option of the holder of the type certificate, either in accordance with the regulations incorporated by reference in the type certificate pursuant to section 4b.13 (c), or in accordance with subsequent amendments to such regulations in effect on the date of application for approval of the change, subject to the following provisions:

(1) When the applicant elects to show compliance with an amendment to the regulations in effect on the date of application for approval of a change, he shall show compliance with all amendments which the Administrator finds are directly related to the particular amendment selected by the applicant.

(2) When the change consists of a new design or a substantially complete redesign of a component, equipment installation, or system installation of the airplane, and the Administrator finds that the regulations incorporated by reference in the type certificate pursuant to section 4b.13 (c) do not provide complete standards with respect to such change, he shall require compliance with such provisions of the regulations in effect on the date of application for approval of the change as he finds will provide a level of safety equal to that established by the regulations incorporated by reference at the time of issuance of the type certificate.

NOTE: Examples of new or redesigned components and installations which might require compliance with regulations in effect on the date of application for approval, are: New powerplant installation which is likely to introduce additional fire or operational hazards unless additional protective measures are incorporated; the installation of an auto-pilot, a pressurization system, or a new electric power system.

(e) If changes listed in subparagraphs (1) through (3) of this paragraph are made, the airplane shall be considered as a new type, in which case a new application for type certificate shall be required and the regulations together with all amendments thereto effective on the date of the new application shall be made applicable in accordance with paragraphs (a), (b), (c), and (d) of this section.

(1) A change in the number of engines;

(2) A change to engines employing different principles of operation or propulsion;

(3) A change in design, configuration, power, or weight which the Administrator finds is so extensive as to require a substantially complete investigation of compliance with the regulations.

4b.12 *Recording of applicable regulations.* The Administrator, upon the issuance of a type certificate, shall record the applicable regulations with which compliance was demonstrated. Thereafter, the Administrator shall record the applicable regulations for each change in the type certificate which is accomplished in accordance with regulations other than those recorded at the time of issuance of the type certificate. (See sec. 4b.11.)

4b.13 *Type certificate.*

(a) An applicant shall be issued a type certificate when he demonstrates the eligibility of the airplane by complying with the requirements of this part in addition to the applicable requirements in Part 1 of this subchapter.

(b) The type certificate shall be deemed to include the type design (see sec. 4b.14 (b)), the operating limitations for the airplane (see sec. 4b.700), and any other conditions or limitations prescribed by the regulations in this subchapter.

(c) The applicable provisions of this part recorded by the Administrator in accordance with section 4b.12 shall be considered as incorporated in the type certificate as though set forth in full.

4b.14 *Data required.*

(a) The applicant for a type certificate shall submit to the Administrator such descriptive data, test reports, and computations as are necessary to demonstrate that the airplane complies with the requirements of this part.

(b) The descriptive data required in paragraph (a) of this section shall be known as the type design and shall consist of such drawings and specifications as are necessary to disclose the configuration of the airplane and all the design features covered in the requirements of

this part, such information on dimensions, materials, and processes as is necessary to define the structural strength of the airplane, and such other data as are necessary to permit by comparison the determination of the airworthiness of subsequent airplanes of the same type.

4b.15 *Inspections and tests.* Inspections and tests shall include all those found necessary by the Administrator to insure that the airplane complies with the applicable airworthiness requirements and conforms to the following:

(a) All materials and products are in accordance with the specifications in the type design.

(b) All parts of the airplane are constructed in accordance with the drawings in the type design.

(c) All manufacturing processes, construction, and assembly are as specified in the type design.

4b.16 *Flight tests.* After proof of compliance with the structural requirements contained in this part, and upon completion of all necessary inspections and testing on the ground, and proof of the conformity of the airplane with the type design, and upon receipt from the applicant of a report of flight tests performed by him, the following shall be conducted:

(a) Such official flight tests as the Administrator finds necessary to determine compliance with the requirements of this part.

(b) After the conclusion of flight tests specified in paragraph (a) of this section, such additional flight tests as the Administrator finds necessary to ascertain whether there is reasonable assurance that the airplane, its components, and equipment are reliable and function properly. The extent of such additional flight tests shall depend upon the complexity of the airplane, the number and nature of new design features, and the record of previous tests and experience for the particular airplane type, its components, and equipment. If practicable, these flight tests shall be conducted on the same airplane used in the flight tests specified in paragraph (a) of this section.

4b.16–1 *Applicant's flight test report (FAA policies which apply to sec. 4b.16).* The applicant should submit a report signed by his test pilot containing the results of flight tests which were conducted by him. It should certify that the airplane has been flown at least in all maneuvers necessary for proof of compliance with the flight requirements and it is his belief that the airplane will conform therewith. In the case of very large airplanes, this procedure may be modified as deemed necessary by the Administrator.

(19 F. R. 4446, July 20, 1954, effective Sept. 1, 1954.)

4b.16–2 *Preflight test planning (FAA policies which apply to sec. 4b.16 (a)).*

(a) *Proposed official flight test program.* Before the airplane is presented for official type certification tests, the applicant should submit to the FAA a proposed flight test program which will indicate at least the following:

(1) The area, defined by the several selections described in section 4b.100–2, which is to be covered by the terms of the type certification.

(2) All proposed tests; the order in which they are to be conducted; the purpose of each test; and for each the airplane weight, c. g. position flap setting, power to be drawn, and, where appropriate, the altitude, the trim speed(s) and the speed(s) or speed range to be investigated. Appendix B presents a list of most of the flight and operation tests generally required for the type certification program together with information relative to the airplane configuration, test procedure, and special instrumentation for each test.

(3) Since most transport airplanes undergo many changes during their life span it is well to consider this fact in setting up a flight test program. Such changes as installation of different propellers, higher powered engines, etc., can often be predicted in advance.

(4) It is often desirable to simulate operation with higher power for the determination of flying qualities and other tests, thus simplifying the problem of approving the airplane when the power change becomes effective. Data of this nature obtained during FAA flight tests may often reduce further testing during the life of the airplane.

(5) When an airplane has been type certificated in the transport category and a change is made affecting performance and/or flying qualities, the following procedure is suggested:

(i) The effect of the change on each of

the flight tests in the general flight program should be noted.

(ii) Those tests which are materially influenced by the change should be listed.

(iii) A test program should be prepared embodying such of these tests as are felt to be critical or representative. This program should be forwarded to the FAA with the reasons for selecting the pertinent items. Appendix C shows representative flight programs for various types of changes and may be helpful in the preparation of the programs.

(iv) A description should be submitted of the method(s) which the applicant purposes to use in order to reduce the observed data to standard conditions.

(v) A statement should be submitted of any intention on the part of the applicant to resort to calculation in lieu of, or for the purpose of generalizing test data, together with a description of the data upon which these calculations are to be based and the methods to be used therein.

(6) Since it will require time for the FAA to determine the adequacy of this entire program, it is strongly recommended that it be submitted as early as practicable, otherwise the commencement of the testing may be delayed.

(b) *Order of testing.* The Civil Air Regulations are so worded that the results of some flight tests have a definite bearing on the conduct of other tests. For this reason careful attention should be given to the order of testing. The exact order of testing will be determined only by considering the particular airplane and test program involved. Appendix E shows a general arrangement that may be of assistance to those applicants who are not familiar with the FAA flight test procedures. Tests which are particularly important in the early stages of the program are:

(1) *Airspeed calibration.* All tests involving airspeed depend upon the calibration.

(2) *Stall speed measurement.* Most of the performance tests and flying qualities are related to the stall speed.

(3) *Minimum control speed for takeoff.* The takeoff safety speed depends upon this item.

(4) *Engine cooling.* All en route climb speeds and cowl flap settings are related to this test.

(c) *Test groupings.*

(1) *Weight and c. g.* In addition to the regulatory relation of one test to another, efficient testing requires that consideration be given to the accomplishment of as many tests on a single flight as can be accommodated successfully. The tests shown in Appendix E have been grouped under various weight and center of gravity conditions in order to facilitate the development of a flight test program.

(2) *Special instrumentation.* Similarly, consideration should be given to grouping of tests that involve special instrumentation. Examples of these are takeoff and landing tests which usually require ground equipment to record horizontal distance, height, and time. Ground calibration of the airspeed indicating system can be accomplished at the same time. The FAA possesses certain instruments which may be used for obtaining test data, such as trailing airspeed bombs, sensitive altimeters, stop watches, carbon monoxide indicators, etc., as well as photographic equipment for measuring takeoff and flight landing paths. It is therefore recommended that the matter of instrumentation be discussed with the FAA before any decision is made with regard to the detailed flight test program. A list containing those tests requiring special instrumentation is shown in Appendix F.

(3) *Data reduction.* If the overall elapsed time for the certification program is to be kept to a minimum, tests requiring considerable data reduction should be conducted as early in the program as possible. Most performance data, particularly landing and takeoff data, fall in this category.

(19 F. R. 4446, July 20, 1954, effective Sept. 1, 1954.)

4b.16–3 *Additional flight tests (FAA policies which apply to sec. 4b.16 (b)).*

(a) *General.*

(1) At the option of the applicant, the flight tests specified in Civil Aeronautics Manual 1.77–4 for the ferry flight of a four-engine airplane with one engine inoperative may be conducted during the flight tests for type certification. Routine CAR tests as prescribed in sections 4b.100 through 4b.743 will be conducted (in accordance with existing procedures) to

determine performance, flying qualities, power plant characteristics, etc.

(2) The official functional and reliability tests will be that portion of the tests conducted under the immediate supervision of the Type Certification Board,[1] as prescribed in (c) through (h) of this section, to show compliance with sections 4b.100 through 4b.743.

(3) Supplementary experience consisting of other flight tests and experience with an airplane (of the same) type will be taken into consideration in establishing the extent of the official portions of the tests. This supplementary experience may be obtained by the manufacturer, military services, airlines, etc.

(4) Simulated tests consisting of tests on the ground or in an airplane of (like) components and equipment under conditions simulating those likely to be obtained in service will also be taken into consideration in establishing the extent of the official portion of the tests.

(b) *Functional and reliability tests.* In order to satisfactorily accomplish the objectives of section 4b.16 (b) concerning additional flight tests and the extent thereof, the Administrator deems it necessary that:

(1) A comprehensive and systematic check be made in flight of the operation of all components to determine whether they "function properly," i. e., perform their intended function without introducing safety hazards.

(2) Sufficient testing and supplementary experience under actual, or a combination of simulated and actual experience, be obtained and evaluated to give reasonable assurance that the airplane is "reliable," i. e., should continue to function properly in service. (In order to obtain wider experience, manufacturers are encouraged to cooperate with airlines or other responsible operators in operating experimental airplanes of the same type under service conditions.)

(3) Appropriate corrective action be taken when the need therefor is determined under (b) (1) and (b) (2) of this section. (The FAA is concerned only to the extent that the airplane can be operated safely under suitable inspection and maintenance procedures, but is not concerned with maintenance costs.)

[1] A Type Certification Board is set up by the FAA field offices on each new type aircraft project.

(c) *Test program.* The Type Certification Board for each project will decide upon a proposed official test program at the time of the preflight meeting of the Board (prior to the routine CAR flight tests) and coordinate this with the airplane manufacturer. At the conclusion of the routine type tests, the T. C. Board will meet again to review the experience gained in those tests, changes made in the design and any additional supplementary experience, and to revise the proposed test program accordingly.

(d) *Planning and execution of test program.* The following points should be considered:

(1) The test program should be sufficiently well planned to enable its execution in an efficient manner without overlooking important items. It is not intended that the "paper work" be overemphasized to the detriment of the practical results, and it should be reduced to a minimum for small simple airplanes. The T. C. Board will review the design features and equipment with respect to the general objectives, and prepare a list showing:

(i) Components and systems to be checked in (d) (4) of this section,

(ii) A brief description of the operations to be performed, where these are not obvious (referencing any necessary operating instructions),

(iii) Special checks or likely critical conditions,

(iv) Estimated flight time required.

(2) Allowance may be made for the functional tests already required by the routine type tests. Allowance may also be made for simulated testing of new features and equipment; however, the flight test program should be planned to determine the adequacy of the simulated tests (e. g., to determine whether the actual environmental conditions of temperature,[2] vibration, etc. are covered by the simulated tests) when these may be critical, and to determine whether the installation and connected systems are satisfactory. The T. C. Board will then make a consolidated estimate of the total flight time required, allowing for over-

[2] This does not imply that flight tests must be conducted under the most severe outside air temperatures likely to be encountered in service. It should normally be possible to determine the effects of extreme outside temperatures on local temperatures by extrapolation or by suitable correction factors.

lapping, and adjust this in accordance with the "Test time" outlined in (e) of this section.

(3) The program will be arranged to permit the Flight Test Inspector in charge to become thoroughly familiar with the flying qualities of the airplane, particularly those not specifically covered in the routine type tests.

(4) All components of the airplane should be intensively operated and studied under all operating conditions expected in service and obtainable within the time and geographic limitations of the tests. Intensive operation means repeated operation of components in various sequences and combinations likely to occur in service. Particular attention should be given to potential sources of crew error, overtaxing of crew ability and the emergency procedures that would be required in the event of malfunction of any component. This intensive type of testing should be conducted in all cases, but the length of time for which it is continued will depend upon the simulated and supplementary experience available for the particular type, as outlined in "Test time" in (e) of this section.

(5) Ground inspections should be made at appropriate intervals during the test program to determine whether there are any failures or incipient failures in any of the components which might be a hazard to safe flight.

(6) When design changes are made during the course of the test, or when the official test airplane differs from those on which supplementary experience is obtained, or from modified versions of the same basic airplane type, the revised or modified items should be rechecked in accordance with the above procedure, but every effort should be made to include such items in the program in such a way as to avoid unduly extending the overall test time. To this end, the Administrator may accept, in lieu of additional flight tests:

(i) Special tests of the original and revised components in which the conditions causing failure are intensified and

(ii) Simulated tests of differing components.

(e) *Test time.* It is highly desirable that functioning and reliability test programs be administered uniformly so that the program and flight time for a given project would be approximately the same regardless of which T. C. Board administered the project. This is difficult to achieve without establishing fixed arbitrary test times which would obviously be contrary to the intent of section 4b.16 (b). The following procedure which permits considerable flexibility is, therefore, established for the guidance of T. C. Boards.

(1) When supplementary experience is not taken into account and the airplane is conventional in regard to complexity and design features, the functioning and reliability test programs should be 150 hours. This time may be reduced to allow for simulated testing (see (d) (2) of this section), and for supplementary experience (see (e) (2) of this section). However it may be necessary to increase the 150 hours, if difficulties are encountered in earlier flights, or for radically new design features or in extreme cases of complexity. An example of extreme complexity would be an airplane intended for operation at 40,000 ft. altitude, with automatic dive recovery flaps, turbos, variable jet exhaust, two speed cooling fans, retractable wind screens, automatic control of engine cooling, turbos, intercoolers, jet exhausts, etc. The test program for such an airplane might require as much as 300 hours if no supplementary experience were available.

(2) When satisfactory supplementary experience is available and taken into account, the following allowances should be used as a guide and applied with judgment in reducing the official flight test time. However, in any case, the official program should provide sufficient time to accomplish the objective of (b) (1) of this section in accordance with the items listed in (d) (3) and (d) (4) of this section.

(i) *For intensive experience.* When the allowance is based on the total time of any one airplane in airline crew training and similar intensive operations, two hours of such operation may be considered equivalent to one hour of official testing.

(ii) *For miscellaneous experience.* When the allowance is based on the total time of any one airplane, five hours of such experience may be considered equivalent to one hour of official testing.

(iii) *Reduction for supplementary experience.* Whenever a reduction of official test

time is desired on the basis of supplementary experience, such experience should be adequately recorded and submitted to the T. C. Board as described in (f) of this section.

(f) *Reports and records.*

(1) A log should be kept of all flight tests, and accurate and complete records kept of the inspections made and of all defects, difficulties, and unusual characteristics and sources of crew error discovered during the tests, and of the recommendations made and action taken. Items for which design changes may be required will be reported to the manufacturer and the appropriate FAA engineering division.

(2) If supplementary experience is to be taken into account, similar records of such experience should be kept and submitted to the T. C. Board, together with a list of the differences between the airplane on which the experience was obtained and the official test airplane. When supplementary experience is obtained on a large fleet of airplanes (for example, military operations) of the same or a comparable type (see (d) (6) of this section), these records may consist of statistical summaries in lieu of complete records for each individual airplane.

(3) At the conclusion of the official tests, a summary report should be prepared by the T. C. Board and forwarded to Washington for inclusion in the Type Inspection Report.

(g) *Administration.* The FAA Flight Test Inspector in charge will act as coordinator of all flight activities of the T. C. Board during the official program and the agent or an alternate designated by him will participate in all flights. He will collaborate with the manufacturers' pilots in all these activities, particularly in regard to flight plans and procedures. The manufacturers' pilots should be in command of all flights, but FAA pilots will fly the airplane at least sufficiently to accomplish item (d) (3) of this section.

(1) Other FAA personnel (e. g., representatives of other divisions and specialists) will participate in the flight tests when deemed necessary by the T. C. Board to accomplish the purposes of the tests.

(2) When supplementary experience is obtained in airline operations, an FAA Bureau of Flight Standards Inspector will be assigned to follow the operations, review the operator's records, and supplement these by reports to the T. C. Board.

(h) *Test airplane.* To facilitate completion of the type certification procedure one airplane may be used for the official functioning and reliability tests while another airplane (or airplanes) is used for the routine type tests. In this case the test time on at least one airplane should be sufficient to accomplish the objective of (b) (2) of this section.

(i) *Modified types.* The procedure outlined in (h) applies to new type designs. When a design employs components identical to those used in previous designs, credit may be given for the supplementary experience available for such components. When a design is modified (for example, several versions of the same basic type with different engines, propellers, etc.), the modified features and components should be treated in accordance with (d) (6) of this section.

(19 F. R. 4447, July 20, 1954, effective Sept. 1, 1954, amended 20 F. R. 6677, Sept. 10, 1955, effective Sept. 30, 1955.)

4b.16-4 *Flight tests (FAA policies which apply to sec. 4b.16).* The policies outlined in section 4b.402-1 (c) and section 4b.402-1 (l) (3) will apply.

(20 F. R. 2279, Apr. 8, 1955, effective Apr. 30, 1955.)

4b.17 *Airworthiness, experimental, and production certificates.* (For requirements with regard to these certificates see Part 1 of this subchapter.)

4b.18 *Approval of materials, parts, processes, and appliances.*

(a) Materials, parts, processes, and appliances shall be approved upon a basis and in a manner found necessary by the Administrator to implement the pertinent provisions of the regulations in this subchapter. The Administrator may adopt and publish such specifications as he finds necessary to administer this regulation, and shall incorporate therein such portions of the aviation industry, Federal, and military specifications respecting such materials, parts, processes, and appliances as he finds appropriate.

NOTE: The provisions of this paragraph are intended to allow approval of materials, parts, processes, and appliances under the system of Technical Standard

Orders, or in conjunction with type certification procedures for an airplane, or by any other form of approval by the Administrator.

(b) Any material, part, process, or appliance shall be deemed to have met the requirements for approval when it meets the pertinent specifications adopted by the Administrator, and the manufacturer so certifies in a manner prescribed by the Administrator.

4b.18–1 *Approval of aircraft materials, parts, processes and appliances (FAA rules which apply to sec. 4b.18).* Aircraft materials, parts, processes and appliances made the subject of Technical Standard Orders shall be approved upon the basis and in the manner prescribed in Part 514 [3] of the Regulations of the Administrator, "Technical Standard Orders—C Series—Aircraft Components."

(17 F. R. 10101, Nov. 7, 1952, effective Dec. 1, 1952.)

4b.18–2 *Application of Technical Standard Orders—C Series (FAA policies which apply to sec. 4b.18).*

(a) *Purpose of Technical Standard Orders,* Technical Standard Orders are a means by which the Administrator adopts and publishes the specifications for which authority is provided in section 4b.18 (a) of this chapter.

(b) *Applicability of Technical Standard Order Requirements.*

(1) The applicability of and effective dates for TSO'd items are set forth in each TSO.

(2) Each Technical Standard Order sets forth the conditions under which materials, parts, processes and appliances approved by the Administrator prior to establishment of an applicable TSO, may continue to be used in aircraft.

(3) The establishment of a Technical Standard Order for any product does not preclude the possibility of establishing the acceptability of a similar product as part of an aircraft, engine or propeller, under the type certification or modification procedures, if there is established a level of safety equivalent to that provided in the Civil Air Regulations as implemented by the appropriate Technical Standard Order and the product is identified as a part of the airplane, engine or propeller.

(c) *Administration of the Technical Standard Order (TSO) System.* The principles which apply in administering the Technical Standard Orders system are as follows:

(1) Technical Standard Orders will reference performance provisions of recognized government specifications, or established industry specifications which have been found acceptable by the FAA. If no satisfactory specification exists, the Orders will include criteria prepared by the Administrator. In preparing criteria of this type, the Administrator will give consideration to recommendations made by the industry.

(2) Minimum performance requirements established by the Federal Aviation Agency and published in Technical Standard Orders will serve as a means by which materials, parts processes, and appliances intended for use in certificated aircraft will be accepted.

(3) TSO's set forth the minimum requirements for safety. Every effort will be made by the FAA to keep the requirements at the minimum levels of safety, and TSO's will not be used to set forth "desirable" standards.

(4) It will be the responsibility of the person submitting a statement of conformance to the FAA, certifying that his product meets the requirements of the TSO, to conduct the necessary tests demonstrating compliance therewith. This person will be held responsible for maintaining quality control adequate to assure that products which he guarantees to meet the requirements of a TSO do, in fact, meet these standards. The FAA will not formally approve such products as meeting the requirements of TSO's nor exercise direct inspection control over them. The statement of conformance with the provisions of a Technical Standard Order normally will be accepted by the FAA as sufficient indication that the applicable requirements have been fulfilled.

Any TSO'd item which is modified must continue to comply with the requirements of the TSO, and the person authorizing the modification will be responsible for such compliance.

(d) *Numbering of Technical Standard Orders.* Each Technical Standard Order will be assigned a designation consisting of the letters "TSO,"

[3] Part 514 is available only through the Federal Register where it appeared on October 12, 1951, 16 FR 10403. Copies of individual TSO's contained therein are available upon application to the Aeronautical Reference Branch, attn: MS-126, Federal Aviation Agency, Washington 25, D.C.

a series code letter "C", indicating aircraft materials, parts, processes, or appliances and a serial number to be assigned in sequence for each of the TSO's issued in the "C" series, e. g., TSO–C–1, "Smoke Detectors." Revisions are indicated by the addition of letters a, b, c, etc., after the number.

4b.18–3 *Manufacturer (FAA interpretation which applies to sec. 4b.18 (b)).*

(a) For the purpose of accepting a statement of conformance for a Technical Standard Order product, the word "manufacturer" is interpreted to mean a person who fabricates, or both fabricates and assembles, a product by cutting, drilling, bolting, riveting, gluing, soldering, sewing, or other fabrication and assembly techniques.

(b) A person is not regarded as the manufacturer solely by his engaging in the following activities:

(1) Distributing a completed product fabricated or fabricated and assembled by another person.

(2) Cleaning and reassembling products, repairing products, or replacing components or parts in products.

(23 F. R. 10325, Dec. 25, 1958, effective Jan. 31, 1959.)

4b.18–4 *Approval of products under the type certificate or modification procedures (FAA policies which apply to sec. 4b.18(b)).* A material part, process, or appliance (hereinafter called "product") may be approved as a part of the airplane type design under a type certificate or a supplemental type certificate in accordance with the procedures provided in this section.

EXPLANATORY NOTE: Products previously approved by the FAA by means of letters of approval, Repair and Alteration Form ACA–337, or listing on FAA Product and Process Specifications will continue to be eligible for installation in aircraft unless the eligibility is restricted by applicable regulations or airworthiness directives issued under section 1.24 of this subchapter.

(a) *Policies controlling where there is an applicable Technical Standard Order.* If a Technical Standard Order covering the product is in effect, the applicant for approval should submit type design data showing that the product meets the performance standards of the Technical Standard Order. Deviations from such performance standards may be allowed to the extent that the applicant for the type certificate or the supplemental type certificate substantiates that certain provisions of the Technical Standard Order are not required for the product as installed in the airplane.

(b) *Policies controlling in the absence of an applicable Technical Standard Order.* Where no TSO covering the product exists, the applicant for approval should submit type design data showing compliance with all the requirements of this part which are applicable to the product. Any deviation from standards prescribed in this part may be allowed only in accordance with section 4b.10.

(c) *Methods of identifying products approved under this section.*

(1) Products approved as a part of the airplane type design under a type certificate should be identified by an airplane part number on the approved drawing list.

(2) Products approved as a part of the airplane type design under a supplemental type certificate should be identified by a part or drawing number on such certificate.

(3) Each TSO product that is approved as a part of the airplane should have the TSO identification removed and be identified as set forth in subparagraph (1) or (2) of this paragraph, whichever is applicable.

(23 F. R. 10325, Dec. 25, 1958, effective Jan. 31, 1959.)

4b.19 *Changes in type design.* (For requirements with regard to changes in type design and the designation of applicable regulations therefor, see sec. 4b.11 (d) and (e), and Part 1 of this subchapter.)

Subpart B—Flight

General

4b.100 *Proof of compliance.*

(a) Compliance with the requirements prescribed in this subpart shall be established by flight or other tests conducted upon an airplane of the type for which a certificate of airworthiness is sought or by calculations based on such tests, provided that the results obtained by

calculations are equivalent in accuracy to the results of direct testing.

(b) Compliance with each requirement shall be established at all appropriate combinations of airplane weight and center of gravity position within the range of loading conditions for which certification is sought by systematic investigation of all these combinations, except where compliance can be inferred reasonably from those combinations which are investigated.

(c) The controllability, stability, trim, and stalling characteristics of the airplane shall be established at all altitudes up to the maximum anticipated operating altitude.

(d) The applicant shall provide a person holding an appropriate pilot certificate to make the flight tests, but a designated representative of the Administrator shall pilot the airplane when it is found necessary for the determination of compliance with the airworthiness requirements.

(e) Official type tests shall be discontinued until corrective measures have been taken by the applicant when either:

(1) The applicant's test pilot is unable or unwilling to conduct any of the required flight tests, or

(2) It is found that requirements which have not been met are so substantial as to render additional test data meaningless or are of such a nature as to make further testing unduly hazardous.

(f) Adequate provision shall be made for emergency egress and for the use of parachutes by members of the crew during the flight tests.

(g) The applicant shall submit to the Administrator's representative a report covering all computations and tests required in connection with calibration of instruments used for test purposes and correction of test results to standard atmospheric conditions. The Administrator's representative shall conduct any flight tests which he finds necessary to check the calibration and correction report.

(17 F. R. 10101, Nov. 7, 1952, effective Dec. 1, 1952.)

4b.100–1 *Procedure for demonstrating compliance with the flight requirements (FAA policies which apply to sec. 4b.100 (a)).*

(a) *Responsibility.* The burden of showing or implementing compliance with the requirements for an airworthiness or a type certificate rests with the applicant. The applicant should at his own expense and risk, conduct such official flight tests as determined by the FAA to demonstrate compliance with the minimum requirements. During the type inspection the applicant should make available the airplane for that purpose as well as all of the personnel and equipment necessary to obtain the required data.

(b) *Tolerances permitted for flight tests.*

(1) *General.* The tolerances in (b) (2) of this section are the allowable deviation from specified flight conditions for a particular test. They are not allowable tolerances on specific requirements, nor are they to be considered as allowable inaccuracy of measurement or of the method of determination. As an example, when demonstrating stability with specified trim speed of 1.4 V_{s_1}, the trim speed may be 1.4 $V_{s_1} \pm 3$ m. p. h. or 3 percent; however, no positive tolerance is permitted when demonstrating the minimum prescribed trim speed of 1.4 V_{s_1}.

(i) Where variation in the parameter on which a tolerance is allowed will have an appreciable effect on the test, the result should be corrected to the standard value of the parameter; otherwise, no correction is necessary. The applicant may adhere to closer tolerances if he so desires.

(ii) The following list indicates the cases in which correction for tolerances should be made:

Test	Weight	C. G.	Air speed	Power	Wind
Airspeed calibration					
Stall speeds	X				
All climbs	X			X	
Landings	X		X		X
Takeoff	X		X	X	X
Accelerate	X		X	X	X
Decelerate	X		X		X
Stability and control.					
Minimum control speed.				X	

(2) *Individual tolerances.* The following are general tolerances from specified values permitted during FAA testing. These toler-

ances apply unless, for a particular test, other tolerances are set forth in the testing procedure. These tolerances are plus or minus variations unless otherwise noted in the particular test:

Item	*Tolerance*
Weight	+5%−10%
Critical items affected by weight	+5%−1%
C. G.	7% total travel
Air speed	3 m. p. h. or ±3% whichever is greater
Power	5%
Wind (takeoff and landing tests)	As low as possible but not to exceed approximately 12% V_{s_1} or 12 m. p. h., whichever is lower, along the runway—measured at a height of 6 feet above the runway surface.

(c) *Type Inspection Report.*

(1) All information and data obtained as a result of the type inspection investigation and tests should be reported in Form ACA 283–4b, Type Inspection Report.

(2) Upon completion of the type inspection, the applicant should prepare the information necessary to show compliance with the requirements. This material together with the Airplane Flight Manual required by section 4b.740 should be completed as promptly as possible and forwarded to the FAA.

(19 F. R. 4448, July 20, 1954, effective Sept. 1, 1954.)

4b.100–2 *Selection of weight, altitudes, speeds and wing flap positions (FAA policies which apply to sec. 4b.100 (b)).* Before starting official flight tests, certain data should be obtained by the applicant in order that the options prescribed in (a) through (e) of this section can be executed:

(a) *The selection of the range of weight and altitude to be covered by the flight testing required for certification.* This selection should be based upon the extent to which the applicant for certification is concerned with the operating limitations which will be imposed upon the airplane. If the applicant is not concerned with this point, he may elect to conduct only the flight tests required to demonstrate compliance with the minimum performance requirements contained in section 4b.110 together with those required to demonstrate compliance with the flying qualities and other requirements specified in sections 4b.130 through 4b.190. If it is practicable to limit the operation of the airplane by a scheduled air carrier to sea level airports containing runways of ample length and to terrain altitude not in excess of 4,000 feet, this procedure appears satisfactory. It should be noted that this case could apply to a seaplane in scheduled operation. If the applicant wishes to provide for the greatest possible flexibility in the matter of compliance with the operating limitations contained in section 40.70 of this subchapter, considerably more performance tests will be necessary. It may be entirely practicable, for example, for operation over routes involving appreciable differences in the altitude of airports, to take advantage of the improvement in performance which is possible by means of reducing the weight at which the airplane is operated. It may also be desirable to alter the various flap settings in order to improve the climbing performance at a given weight. In cases such as these, it will be necessary to determine by flight testing and calculation, the effect of weight, altitude, and flap setting, throughout the range of each for which it is desired to provide, upon the takeoff, landing, and climbing performance and to include this information in the FAA Approved Airplane Flight Manual. This selection will be left to the applicant since, even though he may find it difficult to anticipate the uses to which the airplane may subsequently be put, he is nevertheless in better position to forecast this than anyone else.

(b) *The selection of the weight range to be covered by the terms of the certification.* This selection is closely related to (a) of this section and should be based upon essentially the same considerations. The simplest possible selection of weights is a single maximum weight to be used both for takeoff and landing and as a basis for the operating limitations. The next simplest choice would appear to be a maximum takeoff weight and a maximum landing weight differing from takeoff weight. This choice requires the installation of fuel jettisoning equipment (when the takeoff weight exceeds the

542115 O—60——3

landing weight by more than 5 percent) of sufficient capacity to reduce the weight of the airplane from the maximum takeoff weight to the maximum landing weight in compliance with section 4b.437. The operating limitations may then be based upon the assumption that these two weights exist throughout each flight. The most flexible possible arrangement in the matter of weights is provided by selecting a range of weights for takeoff and a range for landing, and determining the performance as functions of these weights so that, in showing compliance with the operating limitations, any weight within these ranges may be selected to fit the requirements of a particular route. This selection should be left with the applicant.

(c) *The selection of the range of attitude to be covered by the terms of the certification.* This selection is also closely related to (a) of this section and is analogous in its nature to (a) of this section. The simplest possible selection is that indicated by the minimum performance requirements contained in section 4b.110, namely, sea level for the purposes of the determination of the takeoff and landing distances and certain of the rates of climb at 5,000 feet for the purpose of determining the en route rates of climb. The selection providing the greatest possible flexibility is the one in which these items of performance are determined for a range of altitude great enough to cover all anticipated routes over which the airplane may be operated.

(d) *The selection of the wing flap positions desired for certification.* Policies outlined in section 4b.111–1 will apply to this selection.

(e) *The selection of the critical speed*[4] *to be used in the determination of the takeoff distance.* Policies outlined in section 4b.113–2 will apply to this selection.

(19 F. R. 4449, July 20, 1954, effective Sept. 1, 1954.)

[4] The practical effect of the selection of this speed is that it permits the applicant to define in the type certificate the limits of airplane weight and airport altitude within which the airplane may be operated by a scheduled air carrier in compliance with Part 40 of this subchapter.

Discussion of Policies Relating to Flying Qualities in Section 4b.100–3

The relation between flying qualities (controllability, stability, trim, stalling characteristics) and safety involves the level of skill and the degree of attention required on the part of the pilot to fly the airplane. It is theoretically possible to design an airplane which cannot be flown by a single pilot because, for example, he may not have enough strength, or alternatively a sufficiently delicate touch, to operate the controls or there may be so many necessary operations that he cannot perform all of them within the required time. The flight tests pertaining to flying qualities are specified in sections 4b.130 through 4b.133, sections 4b.140 through 4b.144, sections 4b.150 through 4b.158, sections 4b.160 through 4b.162 and sections 4b.170 and 4b.171. These requirements cover the more important characteristics and loading conditions which have been agreed to be critical or representative of flight regimes. If the airplane passes the tests no investigation of other loading conditions will ordinarily be required.

4b.100–3 *Flying qualities (FAA policies which apply to sec. 4b.100 (c)).*

(a) It should be possible to operate the airplane safely at all anticipated altitudes without requiring exceptional attention and skill by the pilot or appropriate crew members.

(b) If there is less than 2 m. p. h. difference in the forward and rearward c. g. stalling speeds, all flying qualities may be based upon the forward c. g. stalling speeds. Otherwise, the stalling speed appropriate to the c. g. position should be used.

(c) If there is reason to believe that any of the flying qualities would be affected by altitude, they should be investigated for the most adverse altitude condition expected in normal operation.

4b.101 *Weight limitations.* The maxi-

mum and minimum weights at which the airplane will be suitable for operation shall be established as follows:

(a) Maximum weights shall not exceed any of the following:

(1) The weight selected by the applicant;

(2) The design weight for which the structure has been proven;

(3) The maximum weight at which compliance with all of the applicable flight requirements has been demonstrated.

(b) It shall be acceptable to establish maximum weights for each altitude and for each practicably separable operating condition (e. g., take-off, en route, landing).

(c) Minimum weights shall not be less than any of the following:

(1) The minimum weight selected by the applicant;

(2) The design minimum weight for which the structure has been proven;

(3) The minimum weight at which compliance with all of the applicable flight requirements has been demonstrated.

4b.102 *Center of gravity limitations.* Center of gravity limits shall be established as the most forward position permissible and the most aft position permissible for each practicably separable operating condition in accordance with section 4b.101 (b). Limits of the center of gravity range shall not exceed any of the following:

(a) The extremes selected by the applicant;

(b) The extremes for which the structure has been proven;

(c) The extremes at which compliance with all of the applicable flight requirements has been demonstrated.

4b.103 *Additional limitations on weight distribution.* If a weight and center of gravity combination is permissible only within certain load distribution limits (e. g., spanwise) which could be exceeded inadvertently, such limits shall be established together with the corresponding weight and center of gravity combinations, and shall not exceed any of the following:

(a) The limits selected by the applicant;

(b) The limits for which the structure has been proven;

(c) The limits for which compliance with all the applicable flight requirements has been demonstrated.

4b.104 *Empty weight.*

(a) The empty weight and the corresponding center of gravity position shall be determined by weighing the airplane. This weight shall exclude the weight of the crew and payload, but shall include the weight of all fixed ballast, unusable fuel supply (see sec. 4b.416), undrainable oil, and total quantity of hydraulic fluid.

(b) The condition of the airplane at the time of weighing shall be one which can be easily repeated and easily defined, particularly as regards the contents of the fuel and oil tanks, and the items of equipment installed.

4b.105 *Use of ballast.* It shall be acceptable to use removable ballast to enable the airplane to comply with the flight requirements. (See secs. 4b.738 and 4b.741 (c).)

(19 F. R. 4449, July 20, 1954, effective Sept. 1, 1954.)

4b.105–1 *Use of ballast during flight tests (FAA policies which apply to sec. 4b.105).* Ballast should be carried during the flight tests whenever it is necessary to simulate pay load. Consideration should be given to the vertical as well as horizontal location of the ballast in cases where it may have an appreciable effect on the performance or flying qualities of the airplane. The strength of the supporting structures should be adequate to preclude their failure as a result of the flight loads that may be imposed during the tests.

(19 F. R. 4449, July 20, 1954, effective Sept. 1, 1954.)

Performance

4b.110 *General.*

(a) With respect to all airplanes type certificated on or after February 12, 1951, the performance prescribed in this subpart shall be determined, and compliance shall be shown, for standard atmospheric conditions and still air, except that the performance as affected by engine power, instead of being based on dry air, shall be based on 80 percent relative humidity.

(b) Each set of performance data required for a particular flight condition shall be determined with the powerplant accessories absorbing the normal amount of power appropriate to

that flight condition. (See also sec. 4b.117.)

4b.110–1 *Engine power corrections (FAA policies which apply to sec. 4b.110).*

(a) *Engine power corrections for vapor pressure.* The following standard vapor pressures, specific humidities, and densities versus altitude have been established for the purpose of correcting airplane performance data in accordance with section 4b.110.

Altitude H (Ft.)	Vapor Pressure e (In. Hg.)	Specific Humidity w (Lb. moisture per lb. dry air)	Density Ratio $\sigma = \frac{\rho}{0.0023769}$
0	0. 403	0. 00849	0. 99508
1, 000	. 354	. 00773	. 96672
2, 000	. 311	. 00703	. 93895
3, 000	. 272	. 00638	. 91178
4, 000	. 238	. 00578	. 88514
5, 000	. 207	. 00523	. 85910
6, 000	. 1805	. 00472	. 83361
7, 000	. 1566	. 00425	. 80870
8, 000	. 1356	. 00382	. 78434
9, 000	. 1172	. 00343	. 76053
10, 000	. 1010	. 00307	. 73722
15, 000	. 0463	. 001710	. 62868
20, 000	. 01978	. 000896	. 53263
25, 000	. 00778	. 000436	. 44806

(b) *Engine power corrections for cylinder head temperatures.* Official flight tests should be discontinued whenever engine limitations are exceeded. This procedure automatically makes corrections of this type unnecessary.

(c) *Engine power corrections for fuel flow.* Official flight tests should not be conducted when the metering characteristics of the carburetor are outside the range of acceptable tolerances. This procedure automatically makes corrections for fuel-air mixture ratio in performance evaluation unnecessary.

(19 F. R. 1817, Apr. 2, 1954, effective Apr. 2, 1954; amended in 23 F. R. 7482, Sept. 26, 1958, effective Oct. 20, 1958.)

4b.110–2 *Engine power calibration (FAA policies which apply to sec. 4b.110).* The performance of an airplane established in accordance with the requirements of sections 4b.110 through 4b.125 and shown in the performance section of the Airplane Flight Manual should be reproducible by any airplane of a similar model having engines that deliver no more than 100 percent certificated rated power. This means that the power used to drive all accessories, other than those necessary to the functioning of the engine, should be deducted from the certificated rated or installed engine power, whichever is less. To assist in meeting these objectives, the engine power of all new type airplanes as defined by section 4b.11 (e) should be calibrated in accordance with paragraphs (a) through (c) of this section.

(a) *Corrections to the calibrated power for engines producing power above the certificated ratings.*

(2) The applicant should provide engine power output data obtained from dynamometer tests, or the equivalent thereof, for all engines that are installed in the airplane which will be used in the power calibration flight tests. The data should be sufficiently complete to allow a direct comparison with the approved certificated ratings of the engines.

(2) If the dynamometer calibration data for any engine selected for the inflight power calibration in accordance with the provisions of paragraph (b) of this section indicate that the power (based on standard atmospheric conditions for the engine) is higher than the certificated rating for the engine model, the calibrated power curve established as a result of flight tests in paragraphs (b) and (c) of this section should be corrected by applying the following power reduction: 100 percent of the power increment between the dynamometer calibration and the certificated engine rating at sea level, and 47 percent of the sea level power increment applied at an altitude of 20,000 feet with a lineal variation between these two points throughout the operating altitude range of the airplane. If the calibrated power curve established as a result of the flight tests represents an average power for more than one engine, it should be corrected by applying a power reduction equivalent to the average power difference between the dynamometer and the rated power for all engines used in the flight calibration tests. The application of other correction methods and values that will adjust the power data on the basis of the certificated rating of the engine throughout the operating altitude range of the airplane are acceptable if they can be substantiated.

(b) *Selection of engines for power calibration in flight.* With the exception of the critical inoperative engine, the number of engines which

will be used as a basis for power calibration is left to the option of the applicant. However, the procedure specified in this paragraph should be followed to determine which engine(s) should be selected for establishing the basic calibrated power curve.

(1) The installed power of all engines should be compared in flight by means of calibrated torquemeters or other equivalent methods. If a calibrated power curve is to be established on the basis that all engine driven accessories will be in operation during flight, the comparison should be made under full accessory load conditions. If a separate calibrated power curve is to be established for application to those test configurations where certain accessories will not be in operation, the power of all engines may be compared when these accessories are in the appropriate idling or off position. In this case it will be necessary to provide data, indicating accessory load requirements for those flight configurations and the particular engine(s) from which the power is obtained.

(2) For two-engine aircraft it is only necessary to calibrate the engine which produces the lesser power determined by comparing the results of the torquemeter indications in accordance with subparagraph (1) of this paragraph for the most critical accessory load condition and taking into consideration the appropriate power reduction when the engine dynamometer test output is above the rated power for the engine. All performance data scheduled in the Airplane Flight Manual should be based on the calibrated power curve established for this engine. If the applicant desires to calibrate the power of both engines, only the all-engine-operating performance data should be based on a curve representing the average power for the two engines.

(3) When the applicant desires to calibrate the power of one engine for aircraft having more than two engines, the engine selected should be that which delivers the lowest power, determined by comparing the results similarly as in the case of the two-engine aircraft in subparagraph (2) of this paragraph. All performance data scheduled in the Airplane Flight Manual should be based on the calibrated power curve established for this engine. If the applicant desires to calibrate the power of two engines, the calibrated power curve should be based on values representing an average of the two engines delivering the lowest power.

(4) The procedure in subparagraph (3) of this paragraph should be followed if the applicant desires to calibrate the power of more than two engines, however, the Airplane Flight Manual performance data should be based upon an average calibrated power curve which has been derived from not more than the actual number of engines in operation corresponding to the test configuration for which performance is established. This procedure is not necessary, for example, in the case where the average power curve for two and three engines is substantially equal. However, the third engine may be calibrated to obtain additional data which will permit a more accurate fairing of the calibrated power curve.

(5) If the results of the flight tests indicate that the power of any engine selected in accordance with the provisions of this paragraph exceeds rated power after the application of the dynamometer correction specified in paragraph (a) of this section, the calibrated power curve for application to performance testing should be based upon not more than certificated rated power of the engine with the power to drive the accessories deducted.

(c) *Flight test procedure for calibrating engine power.* The engine calibration flight tests should be conducted in accordance with the provisions specified in this paragraph.

(1) The critical altitudes of the engine should be established for takeoff power and maximum continuous power providing these critical altitudes lie below the highest operating altitude desired for certification. Critical altitudes need not be determined above the maximum operating altitude of the airplane.

(2) For engine installations specifically designed to indicate power by means of torquemeters, the engine power calibration tests as well as all performance tests which are affected by power should be obtained with calibrated torquemeters.

(3) All engine adjustments such as ignition timing, valve clearances, air-fuel ratios, fuel flow rates, antidetonant injection flow rates, etc. should be maintained within approved limits for the engine. If any permanent

changes are made to the engine or powerplant installation during the type certification tests, and such changes result in an engine power output less than that established in the calibrated power data, then all performance data should be corrected to this lower power.

(4) The engine power calibration tests should be conducted in an atmosphere which is free of any visible moisture.

(5) The engine power calibration tests should be conducted in the configurations that follow:

(i) *Takeoff power.*

Weight—maximum takeoff.
C. G. position—optional.
Wing flaps—takeoff position.
Landing gear—retracted.
Operating engine(s)—takeoff r. p. m. and manifold pressure or full throttle, mixture setting at normal position for takeoff power, carburetor air heat control at cold and cowl flaps in takeoff position (see sec. 4b.118–1 (d) (1)).
Critical inoperative engine—throttle closed on highest powered engine, propeller windmilling in takeoff pitch (may be feathered if automatic feathering device is installed), mixture setting at idle cut-off and cowl flaps in takeoff position (see sec. 4b.118–1 (d) (1)).

(ii) *Maximum continuous power.*

Weight—maximum takeoff.
C. G. position—optional.
Wing flaps—en route position.
Landing gear—retracted.
Operating engine(s)—maximum continuous r. p. m. and manifold pressure or full throttle, mixture setting at normal position, carburetor air heat control at cold and cowl flaps at FAA hot day cooling position.
Critical inoperative engine—throttle closed on highest powered engine, propeller feathered and cowl flaps in minimum drag position.

(6) *Test procedure and required data.* The engine power calibration tests should be conducted in a climbing attitude at the takeoff safety speed, V_2, with the use of takeoff power and at the en route climb speed with the use of maximum continuous power. The climbs should be started at the lowest practicable altitude and cover the altitude range desired for certification. During these tests the engine(s) should be operated within the approved limits for r. p. m., manifold pressures, temperatures, etc. The following data should be recorded at reasonable time intervals for each power condition:

Pressure altitude.
Ambient air temperature.
Humidity.
Indicated air speed.
Engine(s), r. p. m. and manifold pressure.
Torque pressure.
Cylinder head temperatures.
Carburetor air temperature.
Fuel flow rate.
Antidetonant injection flow rate.

In addition a record should be made of the following items:

Fuel grade.
Wing flap position.
Landing gear position.
Cowl flap position.
Mixture setting.
Blower setting.
Accessory power loads and distribution.

(d) *Engine power checks.* A suitable means should be established by which engine power may be compared after overhauls with the original calibrated power data obtained as a result of the type certification tests.

(21 F. R. 8417, Nov. 3, 1956, effective Nov. 30, 1956.)

4b.111 *Wing flap positions.*

(a) The wing flap positions denoted respectively as the take-off, en route, approach, and landing positions shall be selected by the applicant. (See also sec. 4b.323.)

(b) It shall be acceptable to make the flap positions variable with weight and altitude.

4b.111–1 *Selection of the wing flap positions (FAA policies which apply to sec. 4b.111).*

(a) In the selection of the wing flap positions desired for certification, the flap position indicator should show flap up, takeoff, en route, approach, and landing positions. Various items of performance are required to be determined at each of these flap positions. Section 4b.120

(d) requires that the stalling speed with the flap in the "approach" position should not exceed 110 percent of the stalling speed with the flap in the "landing" position. No plans for flight testing should be made until these positions are selected unless the applicant wishes to investigate systematically the effect of flap position upon each of several of the items of performance which should be determined at the nominal position to be selected.

(b) The selection of multiple sets of wing flap positions is permitted in order to obtain optimum performance at various airports. However, it is recommended that the approval of multiple flap position settings for any one airplane be limited to two or at the most three.[5]

(c) A reasonable number of takeoff flap settings in excess of three may be approved for operation under Civil Air Regulations, Parts 40, 41, 42, and 43 of this subchapter if a dispatch procedure is established to provide pertinent operating limitations for the particular takeoff involved.

(19 F. R. 4449, July 20, 1954, effective Sept. 1, 1954.)

4b.112 *Stalling speeds.*

(a) The speed, V_{s_0}, shall denote the calibrated stalling speed, or the minimum steady flight speed at which the airplane is controllable, in miles per hour, with:

(1) Engines idling, throttles closed (or not more than sufficient power for zero thrust at a speed not greater than 110 percent of the stalling speed);

(2) Propeller pitch controls in the position normally used for take-off;

(3) Landing gear extended;

(4) Wing flaps in the landing position;

(5) Cowl flaps closed;

(6) Center of gravity in the most unfavorable position within the allowable landing range;

(7) The weight of the airplane equal to the weight in connection with which V_{s_0} is being used as a factor to determine a required performance.

(b) The speed, V_{s_1}, shall denote the calibrated stalling speed, or the minimum steady flight speed at which the airplane is controllable, in miles per hour, with:

(1) Engines idling, throttles closed (or not more than sufficient power for zero thrust at a speed not greater than 110 percent of the stalling speed);

(2) Propeller pitch controls in the position normally used for take-off, the airplane in all other respects (flaps, landing gear, etc.) in the particular condition existing in the particular test in connection with which V_{s_1} is being used;

(3) The weight of the airplane equal to the weight in connection with which V_{s_1} is being used as a factor to determine a required performance.

(c) The stall speeds defined in this section shall be the minimum speeds obtained in flight tests conducted in accordance with the procedure of subparagraphs (1) and (2) of this paragraph.

(1) From a speed sufficiently above the stalling speed to assure steady conditions, the elevator control shall be applied at a rate such that the airplane speed reduction does not exceed one mile per hour per second. This maneuver shall be performed with the airplane trimmed at a speed of 1.4 V_{s_1}, except that airplanes utilizing adjustable stabilizers may be trimmed at a speed selected by the applicant but not less than 1.2 V_{s_1}, nor greater than 1.4 V_{s_1}.

(2) During the test prescribed in subparagraph (1) of this paragraph, the flight characteristics provisions of section 4b.160 shall be complied with.

4b.112–1 *Procedure for determining stalling speeds (FAA policies which apply to sec. 4b.112 (c)).*

(a) Since all performance requirements are based upon some function of the stalling speeds, accurate measuring methods and careful piloting technique should be employed during the tests required for determination of these speeds. The essential items to be considered when conducting tests to determine the stalling speeds are as follows:

(1) The airspeed system should have the same characteristics as outlined in section 4b.612–1 (a) (2). Preferably, an independent test airspeed system should be employed in

[5] The reason for recommending a limited number of flap settings is due to the increasing complexity of T-category operation with the increasing number of variables such as power ratings, takeoff flap settings and associated climb speeds, temperature accountability, etc., which are contained in the Airplane Flight Manual. Each additional set of flap positions approved increases the complexity with which the performance information in the Airplane Flight Manual can be evaluated to provide the proper level of safety, particularly in the takeoff flight stage.

measuring the stalling speeds such as a shielded or swivel impact pressure sensing head used in conjunction with a trailing static bomb. The airspeed system lag should be a minimum with the impact and static systems dynamically balanced to minimize the error associated with changing ambient pressure. With the above described airspeed system, the applicant may elect to use the minimum airspeed obtained during the maneuver, or may determine and apply the lag correction associated with changing airspeed (deceleration) to the minimum values obtained above. If the latter option is elected, the applicant should determine the correct lag factors to be applied under varying dV/dt conditions. If the airspeed system is *not* dynamically balanced, adequate corrections should be made.

(2) A satisfactory method of determining the correct lag associated with changing airspeed to be applied for balanced systems only in (1) is to simulate the airspeed variations associated with stall tests, utilizing the airspeed system installed in the aircraft. For this purpose an additional airspeed instrument having a known calibration should be inserted in the airspeed system adjacent to the pressure source, and a velocity-time history of instantaneous values for true and lagging total pressures be obtained by photo-recorder. It is necessary that a steady deceleration rate appropriate to that used during actual flight tests be maintained sufficiently long to allow the system lag to stabilize. The simulated velocity-time history should be appropriately corrected to the conditions existing in the actual stall flight tests.

(3) If the stalling speed tests are to be conducted with the propellers delivering zero thrust, some dependable method such as a propeller slipstream rake by means of which zero thrust condition can be ascertained should be available in flight. The general practice of establishing zero thrust r. p. m. by calculation is also acceptable. For the turbo-propeller and turbo-jet powered aircraft of conventional design, the stall speed can be determined with flight idle power, in lieu of zero thrust, if it can be shown that this power does not materially affect the stall speed. If the stall speed is materially affected by the above power, corrections should be made to zero thrust conditions. Analytical corrections will be acceptable if satisfactory accounting is made for the effects of propeller efficiency, slipstream, altitude, and other pertinent variables. The stall speed should be determined below an altitude of 10,000 feet, where practicable, to minimize the altitude effect on flight idle power.

(4) An accurate method for determining the fuel load should be established for the purpose of ascertaining the airplane's gross weight and c. g. position at the time of each stall.

(5) Test instrumentation should consist of the usual sensitive indicators, especially sensitive tachometers, in order to be able to maintain r. p. m. which results in zero thrust. The time history during the stall should be recorded photographically, and should include those data indicated in paragraph (e) (4) of this section.

(b) The test methods required in the options that follow (see also fig. 1) are for the purpose of determining accurately the stalling speed used to calculate the pertinent performance climb requirements. The airplane loading during these tests will depend upon the c. g.-weight range desired for approval, and whether the climb requirements are based on stalling speeds obtained with a fixed, or variable, c. g. position as indicated in subparagraphs (1) and (2) of this paragraph. In any case, the stalling speeds should be based on tests conducted for the most critical c. g.-weight combination, within the allowable tolerance specified in section 4b.100–1.

(1) *Climb requirement based on stalling speed at the most forward c. g. position desired for certification.*

(i) Under this option, the applicant should measure stalling speeds at the maximum forward c. g. position for certification and at the maximum landing weight. However, in some cases where the forward c. g. limit is variable with weight, this would require that stalling speed tests be conducted at a weight and c. g. position outside of the approved structural limit. In lieu of this, and if the applicant so desires, he may measure the stalling speeds at the maximum forward c. g. position for maximum landing weight and also at the maximum forward c. g.

position desired for certification and its associated weight.

(iii) It is only necessary to conduct stall speed tests for one or two loading conditions, as indicated above, if the weight range from maximum take off to minimum landing weight, and the variations in c. g. positions are within the allowable tolerances specified in section 4b.100–1 (b) (2) with respect to both maximum takeoff and minimum landing weights. (See fig. 1, option 1, case A.) In cases where a large variation of weight exists, it may be necessary to make an additional check of the stalling speed at the most forward c. g. position corresponding to maximum takeoff weight. (See fig. 1, option 1, case B.)

(2) *Climb requirement based on stalling speed varying with c. g. position.* If this option is elected, the applicant should conduct a sufficient number of tests to adequately establish the variation of stalling speed with center of gravity position. In any case, the stalling speed should be measured at the maximum forward c. g. position desired for certification and at the most rearward c. g. position desired for the purpose of varying the climb requirement with c. g. position. In the event that the above configurations do not encompass the maximum takeoff weight considering the allowable tolerances, stalling speed test should also be conducted at the maximum takeoff weight and its appropriate c. g.

(c) The deceleration rate actually utilized in each test may be obtained from the velocity-time history provided by photo-recorder data. For the purpose of determining the above deceleration rate, dV/dt should be based on the average slope of the velocity-time history, from a speed 10 percent above the minimum speed obtained with the test airspeed system, down to the minimum speed. (This method should not be used in calculating the appropriate lag corrections indicated in sec. 4b.112–1 (a) (1) and (2).)

(d) *Configurations.* The stalling speed should be demonstrated in the configuration shown in subparagraphs (1) and (2).

(1) *Configurations for demonstrating stalling speed* V_{S_0}, *section 4b.112 (a).*

Weight—maximum landing or maximum weight at required c. g. position.
C. G. position—as required in paragraph (b) of this section.
Wing flaps—landing position.
Landing gear—extended.
Engines—idling or not more than sufficient power for zero thrust at a speed not greater than 110 percent of the stall speed.
Propeller controls—normal takeoff pitch.
Cowl flaps—closed.
Trim speed—as prescribed in section 4b.112 (c) (1).

(2) *Configuration for demonstrating stalling speeds* V_{S_1}, *section 4b.112 (b).*

Weight—maximum landing or maximum weight at required c. g. position.
C. G. position—as required in (b) of this section.
Wing flaps—en route, takeoff and approach positions.
Landing gear—retracted.
Engines—idling or not more than sufficient power for zero thrust at a speed not greater than 110 percent of the stall speed.
Propeller controls—normal takeoff pitch.
Cowl flaps—closed.
Trim speed—as prescribed in section 4b.112 (c) (1).

(e) *Test procedure and required data.*

(1) A sufficient number of representative stalls should be conducted for each airplane configuration and for each c. g. location as required in paragraphs (b) and (d) of this section in order to provide for accurate determination of the stall speeds at a dV/dt equals 1 mph/sec. The minimum number of stalls required will depend on the range of flap angles and other variable factors (such as variable c. g. position in determining the minimum climb requirement) which are proposed by the applicant. In cases where the flap positions have not been predetermined, it is permissible to conduct tests using four or more equally spaced flap angles. Based upon four equally spaced flap settings, an acceptable minimum number of representative stalls for each flap angle should be four. The minimum number of stalls at each flap angle should be increased if a lesser number of flap settings is proposed. For other configurations and variables a lesser

number of stalls should be acceptable once a basic stall speed versus flap angle curve has been determined. Not more than zero propeller thrust should be used, as determined in in paragraph (a) (3) of this section.

(2) The stalling speed tests should be conducted in accordance with the procedure outlined in section 4b.112 (c).

(3) Since the trim speed and the speed at which zero thrust r. p. m. is set (not more than 1.1 V_{s_1}) are a function of the stall speed, a practice run should be made in order to determine the approximate stalling speed.

(4) The following data should be recorded photographically for each stall:

Vertical acceleration.	Air speed.
Angle of attack.	Altimeter.
Elevator angle.	R. P. M.

(5) In addition to the photorecorder record, the following data should be recorded for each stall:

Torque pressure.	Ambient air temperature.
C. G. position.	Wing flap position.
R. P. M. for zero thrust at 1.1 V_s.	Landing gear position.
Time.	IAS at stall warning.
Weight.	Nature of stall warning.

(6) In subparagraph (4), the following data may be omitted if the exception clause of section 4b.160 (c) (2) is applicable, or if during the demonstration of stall characteristics no marginal conditions existed and the elevator control was utilized to the full extent of its rearward (up elevator) travel. Under these circumstances the procedure used for stalling the aircraft to determine stall speeds, and recovery therefrom, should duplicate that used during the stall characteristics demonstration.

Elevator angle.
Angle of attack.
Vertical acceleration.

(22 F. R. 5791, July 20, 1957, effective Aug. 15, 1957, amended 24 F. R. 7067, Sept. 1, 1959, effective Oct. 1, 1959.)

4b.113 *Take-off; general.*

(a) The take-off data in sections 4b.114 to 4b.116, inclusive, shall be determined under the following conditions:

(1) At all weights and altitudes selected by the applicant;

(2) With a constant take-off flap position for the particular weight and altitude;

(3) With the operating engines not exceeding their approved limitations at the particular altitude.

(b) All take-off data, when corrected, shall assume a level take-off surface, and shall be determined on a smooth, dry, hard-surfaced runway, in such a manner that reproduction of the performance does not require exceptional skill or alertness on the part of the pilot. (For temperature accountability data see sec. 4b.117. For wind and runway gradient corrections see appropriate operating rules of this subchapter.)

4b.113–1 *Downwind takeoff (FAA policies which apply to sec. 4b.113).* Downwind takeoff data may be approved on the following basis to provide for situations where geographic locations and terrain indicate they are desirable:

(a) *Performance.* In determining the required distances for takeoff in downwind the data should be substantiated by actual flight tests. The general methods and procedures would be comparable to those for substantiating takeoff distances in no wind. The flight tests should be conducted in tailwind components up to 150 percent of the maximum velocity for which approval is desired except that the performance tests may be simulated in zero wind as outlined below:

(1) The accelerate portions of the "takeoff" and "accelerate-stop" should be demonstrated at speeds corresponding to the zero wind plus 150 percent of the tailwind component for which approval is desired. The calculated distances for entry in the Airplane Flight Manual should also be based on 1.5 times the tailwind component, see (3).

(2) The decelerate portion of the "accelerate-stop" should be demonstrated by stopping from a speed corresponding to V_1 plus 1.5 times the tailwind velocity for which certification is desired.

(3) In determining the takeoff distances for the Airplane Flight Manual performance

data, 150 percent of the effect of the reported tailwind component should be taken into account. (See sec. 4b.740–1 (d) (2) (x).)

This may in some cases, permit calculating the required distances without further tests providing sufficiently high speed takeoffs and decelerations were made in the original type tests. However, except in the circumstances outlined in (d), actual takeoffs should be made under the conditions outlined in (b) to check the flight and ground handling characteristics.

(b) *Controllability.* Takeoffs should be made in steady downwind velocities equal to 1.5 times the maximum velocity for which approval is granted to check the controllability at the higher ground speeds with correspondingly reduced aerodynamic control forces, dynamic balance of landing gear, nose gear shimmy or vibration, etc.

(c) *Brakes.* At present it is believed that for calculated accelerate-stop distances based on actual airplane deceleration tests, the existing brake capacity requirements are sufficient to cover accelerate-stops in downwind velocities of 10 m. p. h. measured at 50′ height. However, in wind velocities above 10 m. p. h. and in unusual cases or special types of operation additional tests or substantiation of the adequacy of the brakes may be necessary, and a revision to the braking system may be required.

(d) *Tolerances.*

(1) With regard to performance tests outlined in (a), approval may be given for calculated takeoff distances for reported tailwind velocities up to 10 m. p. h. measured at 50′ height without camera tests additional to those required for approval of the no wind data.

(2) With regard to controllability tests outlined in (b), approval may be given for reported downwind velocities up to 10 m. p. h. measured at 50′ height without additional flight tests.

(19 F. R. 1817, Apr. 2, 1954, effective Apr. 2, 1954, amended 20 F. R. 2277, Apr. 8, 1955, effective Apr. 30, 1955.)

Discussion of Policies Relating to Determination of the Takeoff Field Length in Section 4b.113–2

The flight path specified in section 4b.113–2 (a) necessarily involves consideration of the level of skill of the pilot who happens to be flying the airplane at the time. The conditions under which this flight path is established provides for a reasonable level of skill by requiring certain minimum speeds which should be attained, as well as a sequence and timing in which it is assumed various configuration adjustments are made to the airplane, each of which have a measurable effect upon the resulting dimensions. The takeoff field length involves the determination of the distances traversed by the airplane for two alternative sequences of events. In the first case the airplane is accelerated to the critical engine failure speed, V_1 (see sec. 4b.114), at which speed all engines are made inoperative and the airplane decelerated to rest. In the second sequence of events the airplane is again accelerated to the same speed, but at that speed the critical engine only is made inoperative and the takeoff continued under certain specified conditions. The distance required to accelerate to the critical-engine-failure speed, V_1, is thus common to both sequences.

4b.113–2 *Determination of the takeoff field length (FAA policies which apply to sec. 4b.113).*

(a) The dimensions of a takeoff flight path should be such that, if the takeoff runway has a length equal to the greater of two possible dimensions of that flight path, an engine failure may occur at any point along the runway and the airplane be able either to stop within the length of the runway or to continue and clear all obstructions to flight until a safe landing is made.

(b) In the tests required by sections 4b.113 through 4b.116, generally one set of data at one altitude should be sufficient to determine take-

off distances for altitudes from sea level to 8,000 feet. If a greater range of airport altitudes is desired, the test should be conducted at two or more altitudes.

(19 F. R. 4451, July 20, 1954, effective Sept. 1, 1954.)

4b.114 *Take-off speeds.*

(a) The critical-engine-failure speed V_1, in terms of calibrated air speed, shall be selected by the applicant, but it shall not be less than the minimum speed at which the controllability is demonstrated during the take-off run to be adequate to permit proceeding safely with the take-off, using normal piloting skill, when the critical engine is suddenly made inoperative.

(b) The minimum take-off safety speed V_2, in terms of calibrated air speed, shall be selected by the applicant so as to permit the rate of climb required in section 4b.120 (a) and (b), but it shall not be less than:

(1) 1.2 V_{S_1} for two-engine propeller-driven airplanes and for airplanes without propellers which have no provisions for obtaining a significant reduction in stalling speed with power on (one engine inoperative).

(2) 1.15 V_{S_1} for propeller-driven airplanes having more than two engines and for airplanes without propellers which have provisions for obtaining a significant reduction in stalling speed with power on (one engine inoperative).

(3) 1.10 times the minimum control speed V_{MC} established under section 4b.133.

(c) If engine failure is assumed to occur at or after the attainment of V_2, the demonstration in which the take-off run is continued to include the take-off climb, as provided in paragraph (a) of this section, shall not be required.

Discussion of Policies Relating to Selection of the Takeoff Speeds in Section 4b.114–1

Section 4b.114 (a) specifies a speed at which the engine is assumed to fail and which may be lower than the speed at which flight is possible. The operating requirements of section 40.72 of this chapter limit the takeoff operation of the airplane to a weight such that in the event of engine failure at the critical-engine-failure speed, (V_1), the airplane can be brought to rest within the length of the runway or the takeoff continued and a height of 50 feet attained at the end of the runway. It follows that for any airplane at a particular weight there is an optimum value for this critical-engine-failure speed which results in the minimum required runway length and further, this optimum condition is obtained when the two alternative distances are equal. In the case of an airplane having a comparatively high wing loading but low power loading, and particularly in the case of airplanes with four or more engines, this optimum may be appreciably below the speed at which flight is possible.

The V_2 speed specified in section 4b.114 (b) is a minimum speed at which it is considered safe to attempt to complete the takeoff with one engine inoperative. The limitation upon the takeoff safety speed, (V_2), based upon stalling speed, involves the power-off stalling speed with 20 percent and 15 percent margins as reasonable minimums to insure against inadvertent stalling of the airplane.

For propeller-driven airplanes the difference between the two margins, based upon the number of engines installed in the airplane, is due to the fact that the application of power ordinarily reduces the stalling speed appreciably. In the case of the two-engine propeller-driven airplane, at least half of this reduction is eliminated by the failure of an engine. In the case of a four-engine propeller-driven airplane, certainly less than half and probably closer to one-quarter only of the difference is eliminated by the failure of an engine. The difference in the required factors, therefore, provides approximately the same margin over the actual stalling speed under the power conditions which are obtained after the loss of an engine no matter what the number of engines

be applied to the wheels with inflated tires, except that for multiple-wheel gear units incorporating more than one shock strut, it shall be permissible to use a rational distribution of the ground reactions between the deflated and inflated tires, taking into account the differences in shock strut extensions resulting from a deflated tire.

(1) ***Landing conditions.*** For one deflated tire and for 2 deflated tires, the applied load to each gear unit shall be assumed to be 60 percent and 50 percent, respectively, of the limit load applied to each gear for each of the prescribed landing conditions except that, for the drift landing condition of section 4b.234, 100 percent of the vertical load shall be applied.

(2) ***Taxying and ground handling conditions.*** For one deflated tire and for 2 deflated tires, the applied side and/or drag load factor at the center of gravity shall be the most critical value up to 50 percent and 40 percent, respectively, of the limit side and/or drag load factors corresponding with the most severe condition resulting from consideration of the prescribed taxying and ground handling conditions except that, for the braked roll conditions of section 4b.235 (b) (1) and (2) (ii), the drag loads on each inflated tire shall not be less than those at each tire for the symmetrical load distribution with no deflated tires. For one and 2 deflated tires the vertical load factor at the center of gravity shall be 60 percent and 50 percent, respectively, of the factor with no deflated tires, except that it shall not be less than 1g. Pivoting need not be considered.

(3) ***Towing conditions.*** For one deflated tire and for 2 deflated tires, the towing load, F_{TOW}, shall be 60 percent and 50 percent, respectively, of the load prescribed.

NOTE: In determining the total load on a gear unit with respect to the provisions of paragraphs (b) and (c) of this section, the transverse shift in the load centroid, due to unsymmetrical load distribution on the wheels, is normally neglected.

Water Loads

4b.250 ***General.*** The structure of hull and float type seaplanes shall be designed for water loads developed during take-off and landing with the seaplane in any attitude likely to occur in normal operation at appropriate forward and sinking velocities under the most severe sea conditions likely to be encountered. Unless a more rational analysis of the water loads is performed, the requirements of sections 4b.251 through 4b.258 shall apply.

4b.250–1 *Water loads—Alternate standards (FAA policies which apply to sec. 4b.250).* ANC–3 provides a level of safety equivalent to, and may be applied in lieu of section 4b.250.

(17 F. R. 10102, Nov. 7, 1952, effective Oct. 31, 1952.)

4b.251 ***Design weights and center of gravity positions.***

(a) ***Design weights.*** The water load requirements shall be complied with at all operating weights up to the design landing weight except that for the take-off condition prescribed in section 4b.255 the design take-off weight shall be used.

(b) ***Center of gravity positions.*** The critical center of gravity positions within the limits for which certification is sought shall be considered to obtain maximum design loads for each part of the seaplane structure.

4b.252 ***Application of loads.***

(a) The seaplane as a whole shall be assumed to be subjected to the loads corresponding with the load factors specified in section 4b.253, except as otherwise prescribed. In applying the loads resulting from the load factors prescribed in section 4b.253, it shall be permissible to distribute the loads over the hull bottom in order to avoid excessive local shear loads and bending moments at the location of water load application, using pressures not less than those prescribed in section 4b.256 (b).

(b) For twin float seaplanes, each float shall be treated as an equivalent hull on a fictitious seaplane having a weight equal to one-half the weight of the twin float seaplane.

(c) Except in the take-off condition of section 4b.255, the aerodynamic lift on the seaplane during the impact shall be assumed to be ⅔ of the weight of the seaplane.

4b.253 ***Hull and main float load factors.*** Water reaction load factors shall be computed as follows:

For the step landing case:

$$n_w = \frac{C_1 V_{s_0}^2}{\tan^{2/3}\beta_w^{1/3}};$$

For the bow and stern landing cases:

$$n_w = \frac{C_1 V_{s_0}^2}{\tan^{2/3}\beta W^{1/3}} \times \frac{K_1}{(1+r_x^2)^{2/3}};$$

where:

n_w = water reaction load factor (water reaction divided by the seaplane weight);

C_1 = empirical seaplane operations factor equal to 0.009, except that this factor shall not be less than that necessary to obtain the minimum value of step load factor of 2.33;

V_{s_0} = seaplane stalling speed (mph) with landing flaps extended in the appropriate position and with no slipstream effect;

β = angle of dead rise at the longitudinal station at which the load factor is being determined (see fig. 4b–15a);

W = seaplane design landing weight in pounds.

K_1 = empirical hull station weighing factor. (See fig. 4b–15b.) For a twin float seaplane, in recognition of the effect of flexibility of the attachment of the floats to the seaplane, it shall be acceptable to reduce the factor K_1 at the bow and stern to 0.8 of the value shown in figure 4b-15b. This reduction shall not apply to the float design but only to the design of the carry-through and seaplane structure;

r_x = ratio of distance, measured parallel to hull reference axis, from the center of gravity of the seaplane to the hull longitudinal station at which the load factor is being computed to the radius of gyration in pitch of the seaplane, the hull reference axis being a straight line, in the plane of symmetry, tangential to the keel at the main step.

4b.254 *Hull and main float landing conditions.*

(a) *Symmetrical step landing.* The limit water reaction load factor shall be in accordance with section 4b.253. The resultant water load shall be applied at the keel through the center of gravity perpendicularly to the keel line.

(b) *Symmetrical bow landing.* The limit water reaction load factor shall be in accordance with section 4b.253. The resultant water load shall be applied at the keel ⅕ of the longitudinal distance from the bow to the step, and shall be directed perpendicularly to the keel line.

(c) *Symmetrical stern landing.* The limit water reaction load factor shall be in accordance with section 4b.253. The resultant water load shall be applied at the keel at a point 85 percent of the longitudinal distance from the step to the stern post, and shall be directed perpendicularly to the keel line.

(d) *Unsymmetrical landing; hull type and single float seaplanes.* Unsymmetrical step, bow, and stern landing conditions shall be investigated. The loading for each condition shall consist of an upward component and a side component equal, respectively, to 0.75 and 0.25 tan β times the resultant load in the corresponding symmetrical landing condition. (See paragraphs (a), (b), and (c) of this section.) The point of application and direction of the upward component of the load shall be the same as that in the symmetrical condition, and the point of application of the side component shall be at the same longitudinal station as the upward component but directed inward perpendicularly to the plane of symmetry at a point midway between the keel and chine lines.

(e) *Unsymmetrical landing; twin float seaplanes.* The unsymmetrical loading shall consist of an upward load at the step of each float of 0.75 and a side load of 0.25 tan β at one float times the step landing load obtained in accordance with section 4b.253. The side load shall be directed inboard perpendicularly to the plane of symmetry midway between the keel and chine lines of the float at the same longitudinal station as the upward load.

4b.255 *Hull and main float take-off condition.* The provisions of this section shall apply to the design of the wing and its attachment to the hull or main float. The aerodynamic wing lift shall be assumed to be zero.

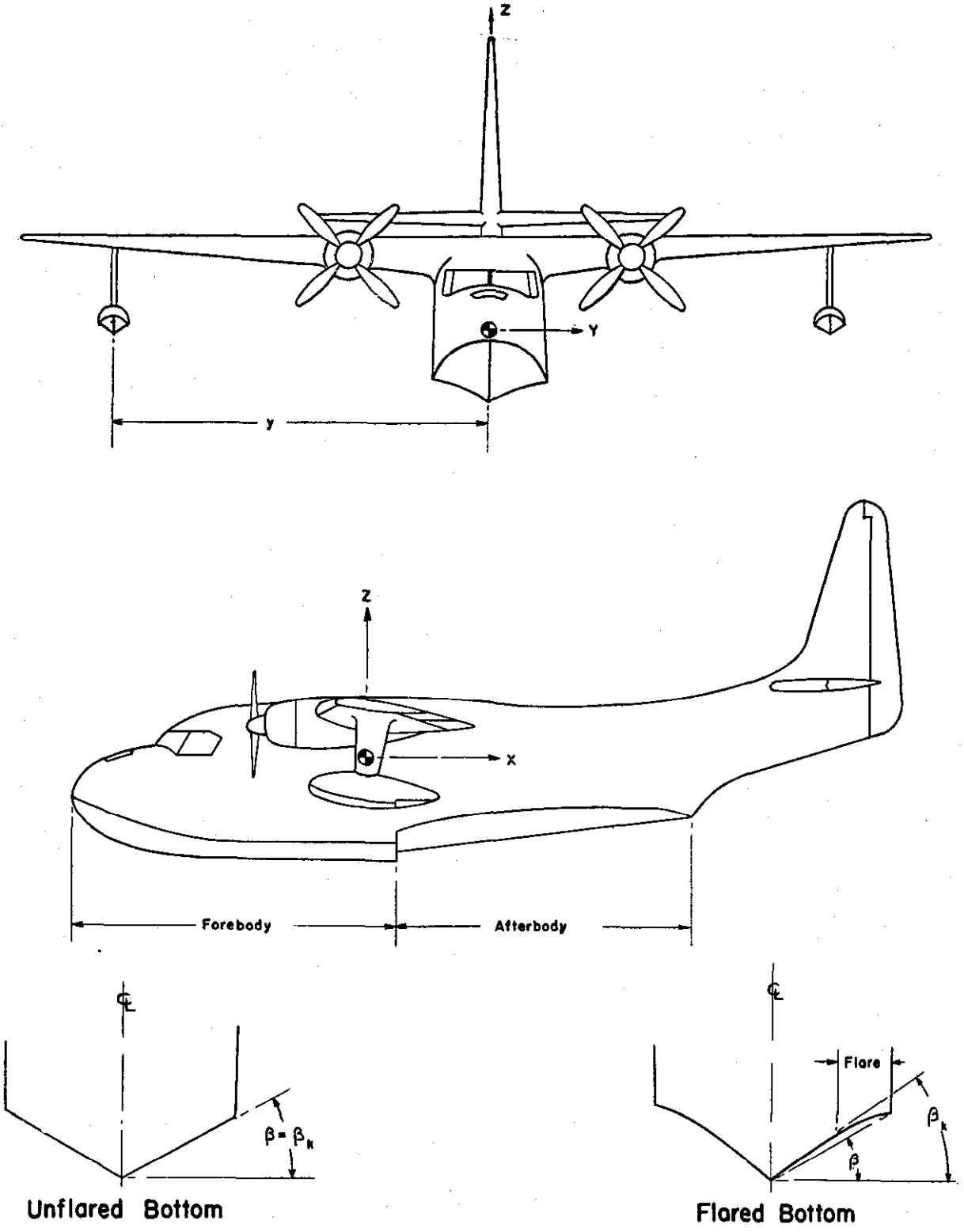

Figure 4b–15a.—Pictorial definition of angles, dimensions, and directions on a seaplane.

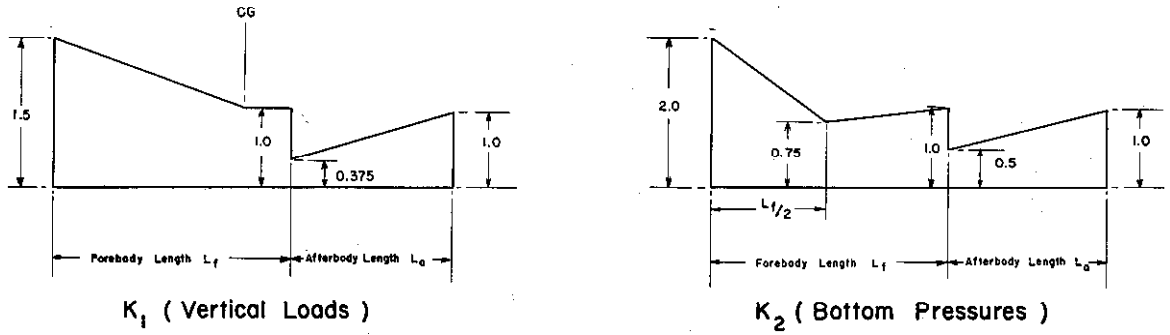

Figure 4b–15b.—Hull station weighing factor.

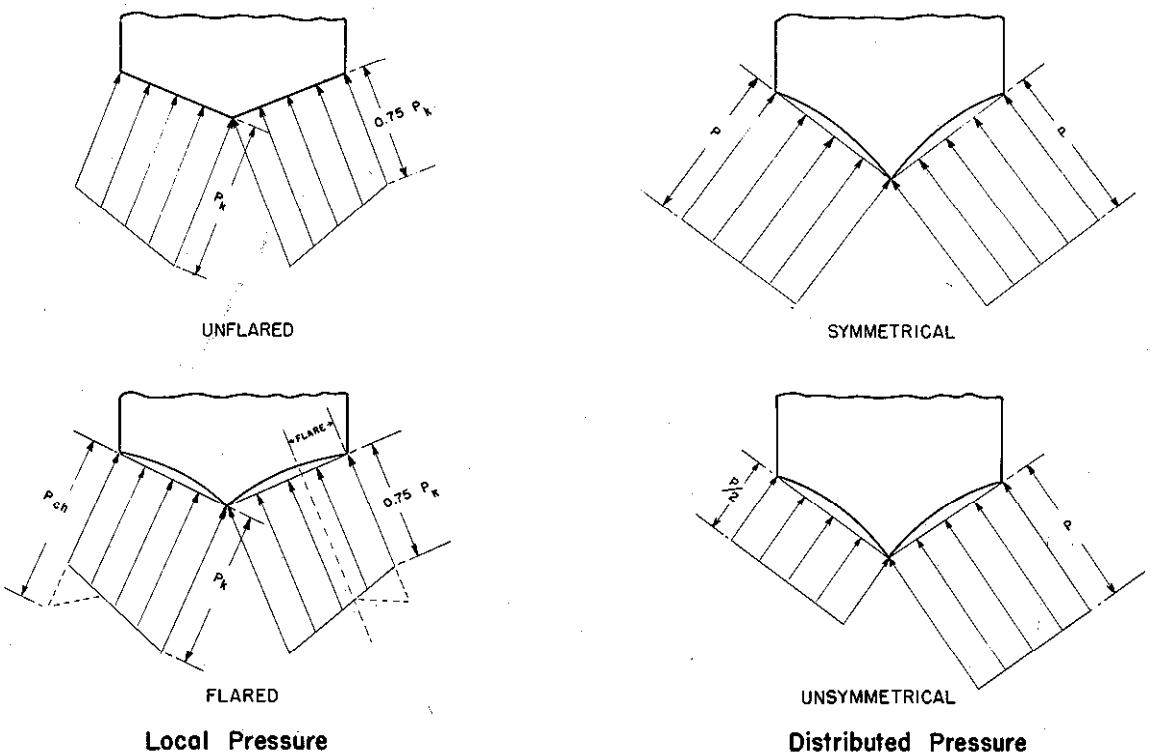

Figure 4b–15c.—Transverse pressure distributions.

A downward inertia load shall be applied and shall correspond with the following load factor:

$$n=\frac{C_{TO}\,V_{s_1}{}^2}{\tan^{2/3}\beta W^{1/3}};$$

where:

n=inertia load factor;

C_{TO}=empirical seaplane operations factor equal to 0.003;

V_{s_1}=seaplane stalling speed (mph) at the design take-off weight with the flaps extended in the appropriate take-off position;

β=angle of dead rise at the main step (degrees);

W=seaplane design take-off weight in pounds.

4b.256 *Hull and main float bottom pressures.* The provisions of this section shall apply to the design of the hull and main float structure, including frames and bulkheads, stringers, and bottom plating. In the absence of more rational data, the pressures and distributions shall be as follows:

(a) *Local pressures.* The following pressure distributions are applicable for the design

of the bottom plating and stringers and their attachments to the supporting structure. The area over which these pressures are applied shall be such as to simulate pressures occurring during high localized impacts on the hull or float, and need not extend over an area which would induce critical stresses in the frames or in the overall structure:

(1) *Unflared bottom.* The pressure at the keel (psi) shall be computed as follows:

$$P_k = C_2 \frac{K_2 V_{s_1}^2}{\tan \beta_k};$$

where:

P_k = pressure at the keel;
C_2 = 0.0016;
K_2 = hull station weighing factor (see fig. 4b–15b);
V_{s_1} = seaplane stalling speed (mph) at the design take-off weight with flaps extended in the appropriate take-off position;
β_k = angle of dead rise at keel (see fig. 4b–15a).

The pressure at the chine shall be 0.75 P_k, and the pressures between the keel and chine shall vary linearly. (See fig. 4b–15c.)

(2) *Flared bottom.* The pressure distribution for a flared bottom shall be that for an unflared bottom prescribed in subparagraph (1) of this paragraph, except that the pressure at the chine shall be computed as follows:

$$P_{ch} = C_3 \frac{K_2 V_{s_1}^2}{\tan \beta};$$

where:

P_{ch} = pressure at the chine;
C_3 = 0.0012;
K_2 = hull station weighing factor (see fig. 4b–15b);
V_{s_1} = seaplane stalling speed (mph) at the design take-off weight with flaps extended in the appropriate takeoff position;
β = angle of dead rise at appropriate station.

The pressure at the beginning of the flare shall be the same as for an unflared bottom, and the pressure between the chine and the beginning of the flare shall vary linearly. (See fig. 4b–15c.)

(b) *Distributed pressures.* The following distributed pressures are applicable for the design of the frames, keel, and chine structure. These pressures shall be uniform and shall be applied simultaneously over the entire hull or main float bottom. The loads so obtained shall be carried into the sidewall structure of the hull proper, but need not be transmitted in a fore and aft direction as shear and bending loads.

(1) *Symmetrical.* The symmetrical pressures shall be computed as follows:

$$P = C_4 \frac{K_2 V_{s_0}^2}{\tan \beta};$$

where:

P = pressure;
$C_4 = 0.078 C_1$ (for C_1 see sec. 4b.253);
K_2 = hull station weighing factor (see fig. 4b–15b);
V_{s_0} = seaplane stalling speed (mph) with landing flaps extended in the appropriate position and with no slipstream effect;
β = angle of dead rise at appropriate station.

(2) *Unsymmetrical.* The unsymmetrical pressure distribution shall consist of the pressures prescribed in subparagraph (1) of this paragraph on one side of the hull or main float center line and one-half of that pressure on the other side of the hull or main float center line. (See fig. 4b–15c.)

4b.257 *Auxiliary float loads.* Auxiliary floats, their attachments, and supporting structure shall be designed for the following conditions. In the cases specified in paragraphs (a), (b), (c), and (d) of this section it shall be acceptable to distribute the prescribed water loads over the float bottom to avoid excessive local loads, using bottom pressures not less than those prescribed in paragraph (f) of this section.

(a) *Step loading.* The resultant water load shall be applied in the plane of symmetry of the float at a point three-fourths of the distance from the bow to the step and shall be perpendicular to the keel. The resultant limit load shall be computed as follows, except that the value of L need not exceed three times the weight of the displaced water when the float is completely submerged:

$$L = \frac{C_5 V_{s_0}^2 W^{2/3}}{\tan^{2/3} \beta_s (1 + r_y^2)^{2/3}};$$

where:

L=limit load

C_s=0.004;

V_{s_0}=seaplane stalling speed (mph) with landing flaps extended in the appropriate position and with no slipstream effect;

W=seaplane design landing weight in pounds;

β_s=angle of dead rise at a station ¾ of the distance from the bow to the step, but need not be less than 15 degrees;

r_y=ratio of the lateral distance between the center of gravity and the plane of symmetry of the float to the radius of gyration in roll.

(b) *Bow loading.* The resultant limit load shall be applied in the plane of symmetry of the float at a point one-fourth of the distance from the bow to the step and shall be perpendicular to the tangent to the keel line at that point. The magnitude of the resultant load shall be that specified in paragraph (a) of this section.

(c) *Unsymmetrical step loading.* The resultant water load shall consist of a component equal to 0.75 times the load specified in paragraph (a) of this section and a side component equal to 0.25 tan β times the load specified in paragraph (a) of this section. The side load shall be applied perpendicularly to the plane of symmetry of the float at a point midway between the keel and the chine.

(d) *Unsymmetrical bow loading.* The resultant water load shall consist of a component equal to 0.75 times the load specified in paragraph (b) of this section and a side component equal to 0.25 tan β times the load specified in paragraph (b) of this section. The side load shall be applied perpendicularly to the plane of symmetry at a point midway between the keel and the chine.

(e) *Immersed float condition.* The resultant load shall be applied at the centroid of the cross section of the float at a point one-third of the distance from the bow to the step. The limit load components shall be as follows:

$$\text{vertical}=\rho_g V$$

$$\text{aft}=C_x\frac{\rho}{2}V^{2/3}(KV_{s_0})^2$$

$$\text{side}=C_y\frac{\rho}{2}V^{2/3}(KV_{s_0})^2$$

where:

ρ=mass density of water;

V=volume of float;

C_x=coefficient of drag force, equal to 0.10;

C_y=coefficient of side force, equal to 0.08;

K=0.8, except that lower values shall be acceptable if it is shown that the floats are incapable of submerging at a speed of 0.8 V_{s_0} in normal operations;

V_{s_0}=seaplane stalling speed (mph) with landing flaps extended in the appropriate position and with no slipstream effect.

(f) *Float bottom pressures.* The float bottom pressures shall be established in accordance with section 4b.256 (a) and (b). The angle of dead rise to be used in determining the float bottom pressures shall be as defined in paragraph (a) of this section.

4b.258 *Seawing loads.* Seawing design loads shall be based on applicable test data.

Emergency Landing Conditions

4b.260 *General.* The following requirements deal with emergency conditions of landing on land or water in which the safety of the occupants shall be considered, although it is accepted that parts of the airplane may be damaged.

(a) The structure shall be designed to give every reasonable probability that all of the occupants, if they make proper use of the seats, belts, and other provisions made in the design (see sec. 4b.358), will escape serious injury in the event of a minor crash landing (with wheels up if the airplane is equipped with retractable landing gear) in which the occupants experience the following ultimate inertia forces relative to the surrounding structure:

(1) Upward___ 2.0g (Downward__ 4.5g)
(2) Forward___ 9.0g
(3) Sideward__ 1.5g

(b) The use of a lesser value of the downward inertia force specified in paragraph (a) of this section shall be acceptable if it is shown that the airplane structure can absorb the landing loads corresponding with the design landing

weight and an ultimate descent velocity of 5 f. p. s. without exceeding the value chosen.

(c) The inertia forces specified in paragraph (a) of this section shall be applied to all items of mass which would be apt to injure the passengers or crew if such items became loose in the event of a minor crash landing, and the supporting structure shall be designed to restrain these items.

4b.261 *Structural ditching provisions.* (For structural strength considerations of ditching provisions see sec. 4b.361 (c).)

Fatigue Evaluation

4b.270 *General.* The strength, detail design, and fabrication of those portions of the airplane's flight structure in which fatigue may be critical shall be evaluated in accordance with the provisions of either paragraph (a) or (b) of this section.

(a) *Fatigue strength.* The structure shall be shown by analysis and/or tests to be capable of withstanding the repeated loads of variable magnitude expected in service. The provisions of subparagraphs (1) through (3) of this paragraph shall apply.

(1) Evaluation of fatigue shall involve the following:

(i) Typical loading spectrum expected in service;

(ii) Identification of principal structural elements and detail design points, the fatigue failure of which could cause catastrophic failure of the aircraft; and

(iii) An analysis and/or repeated load tests of principal structural elements and detail design points identified in subdivision (ii) of this subparagraph.

NOTE: Usually tests of principal structural elements include major fittings, samples of joints, spar cap strips, skin units, and other representative sections of the flight structure.

(2) It shall be acceptable to utilize the service history of airplanes of similar structural design, taking due account of differences in operating conditions and procedures.

(3) When circumstances require substantiation of the pressure cabin by fatigue tests, the cabin or representative portions of it shall be cycle-pressure tested, utilizing the normal operating pressure together with the effects of external aerodynamic pressure combined with the flight loads. It shall be acceptable to represent the effects of flight loads by an increased cabin pressure, or to omit the flight loads if they are shown to have no significant effect upon fatigue.

(b) *Fail safe strength.* It shall be shown by analysis and/or tests that catastrophic failure or excessive structural deformation, which could adversely affect the flight characteristics of the airplane, are not probable after fatigue failure or obvious partial failure of a single principal structural element. After such failure, the remaining structure shall be capable of withstanding static loads corresponding with the flight loading condition specified in subparagraphs (1) through (4) of this paragraph. These loads shall be multiplied by a factor of 1.15 unless the dynamic effects of failure under static load are otherwise taken into consideration. In the case of a pressure cabin, the normal operating pressures combined with the expected external aerodynamic pressures shall be applied simultaneously with the flight loading conditions specified in this paragraph.

(1) An ultimate maneuver load factor of 2.0 at V_C.

(2) Gust loads as specified in sections 4b.211 (b) and 4b.215 (b), except that these gust loads shall be considered to be ultimate and the gust velocities shall be as follows:

(i) At speed V_B, 49 fps from sea level to 20,000 feet altitude, thereafter decreasing linearly to 28 fps at 50,000 feet altitude.

(ii) At speed V_C, 33 fps from sea level to 20,000 feet altitude, thereafter decreasing linearly to 16.5 fps at 50,000 feet altitude.

(iii) At speed V_D, 15 fps from sea level to 20,000 feet altitude, thereafter decreasing linearly to 6 fps at 50,000 feet altitude.

(3) Eighty percent of the limit loads resulting from the conditions specified in section 4b.220 (c). These loads shall be considered to be ultimate.

(4) Eighty percent of the limit maneuvering loads resulting from the conditions specified in section 4b.215 (a), except that the load need not exceed 100 percent of the critical load obtained in compliance with the provisions of section 4b.215 (a) using a pilot effort of 180

pounds. This load shall be considered to be ultimate.

4b.270–1 *Flight structure for fatigue evaluation (FAA interpretations which apply to sec. 4b.270).* The term "flight structure" as applied to fatigue evaluation, is defined as those portions of the airplane's structure failure of which could result in catastrophic failure of the aircraft and includes the wings, fixed and movable control surfaces, fuselage, and their related primary attachments.

(23 F. R. *3031, May 7, 1958,* effective June 6, 1958.)

4b.270–2 *Fatigue evaluation, general (FAA policies which apply to sec. 4b.270).* The applicant should submit to the FAA a report outlining the procedures and the substantiating analyses and tests he proposes to follow in showing compliance with the fatigue evaluation requirements of section 4b.270. Typical procedures which may be used as guidance in the fatigue evaluation of the structures are discussed in appendix H to the Civil Aeronautics Manual 4b.

(23 F. R. *3031, May 7, 1958,* effective June 6, 1958.)

Subpart D—Design and Construction

General

4b.300 *Scope.* The airplane shall not incorporate design features or details which experience has shown to be hazardous or unreliable. The suitability of all questionable design details or parts shall be established by tests.

4b.300–1 *Turnbuckle safetying (FAA policies which apply to sec. 4b.300).* The procedure outlined in section 4b.329–2 should be followed in safetying turnbuckles.

(20 F. R. 2278, Apr. 8, 1955, effective Apr. 30, 1955.)

4b.301 *Materials.* The suitability and durability of all materials used in the airplane structure shall be established on the basis of experience or tests. All materials used in the airplane structure shall conform to approved specifications which will insure their having the strength and other properties assumed in the design data.

4b.301–1 *Acceptability of materials (FAA policies which apply to sec. 4b.301).*

(a) Materials conforming to established industry or military specifications or to Technical Standard Orders issued by the Administrator are acceptable for use on transport category airplanes. Where new or improved materials are used or where the materials are not covered by specifications sufficient information and data should be submitted to the Administrator to enable him to assess the suitability of the material. In all cases it is the responsibility of the applicant to demonstrate the adequacy of the materials employed.

(20 F. R. 2278, Apr. 8, 1955, effective Apr. 30, 1955.)

4b.302 *Fabrication methods.* The methods of fabrication employed in constructing the airplane structure shall be such as to produce a consistently sound structure. When a fabrication process such as gluing, spot welding, or heat treating requires close control to attain this objective, the process shall be performed in accordance with an approved process specification.

4b.303 *Standard fastenings.* All bolts, pins, screws, and rivets used in the structure shall be of an approved type. The use of an approved locking device or method is required for all such bolts, pins, and screws. Self-locking nuts shall not be used on bolts which are subject to rotation in operation.

4b.304 *Protection.*

(a) All members of the structure shall be suitably protected against deterioration or loss of strength in service due to weathering, corrosion, abrasion, or other causes.

(b) Provision for ventilation and drainage of all parts of the structure shall be made where necessary for protection.

(c) In seaplanes, special precautions shall be taken against corrosion from salt water, particularly where parts made from different metals are in close proximity.

4b.305 *Inspection provisions.* Means shall be provided to permit the close examination of those parts of the airplane which require periodic inspection, adjustment for proper alignment and functioning, and lubrication of moving parts.

4b.306 *Material strength properties and design values.*

(a) Material strength properties shall be based on a sufficient number of tests of material conforming to specifications to establish design values on a statistical basis.

(b) The design values shall be so chosen that the probability of any structure being understrength because of material variations is extremely remote. The effects of temperature on allowable stresses used for design in an essential component or structure shall be considered where thermal effects are significant under normal operating conditions.

(c) ANC–5, ANC–18, and ANC–23, Part II values shall be used unless shown to be inapplicable in a particular case.

NOTE: ANC–5, "Strength of Metal Aircraft Elements," ANC–18, "Design of Wood Aircraft Structures," and ANC–23, "Sandwich Construction for Aircraft," are published by the Subcommittee on Air Force-Navy-Civil Aircraft Design Criteria, and may be obtained from the Superintendent of Documents, Government Printing Office, Washington 25, D. C.

(d) The strength, detail design, and fabrication of the structure shall be such as to minimize the probability of disastrous fatigue failure. (See also sec. 4b.270.)

NOTE: Points of stress concentration are one of the main sources of fatigue failure.

4b.306–1 *Material strength properties (FAA policies which apply to sec. 4b.306 (c)).*

(a) In the case of structures where the applied loads are eventually distributed through a single member within an assembly, the failure of which would result in the loss of the structural integrity of the component involved, the guaranteed minimum design mechanical properties ("A" values) listed in ANC–5 [8] should be used for design.

(b) Redundant structures wherein failure of individual elements would result in the applied load being safely distributed to other load-carrying members, may be designed on the basis of the "90 percent probability" ("B" values).

(c) When strength testing is employed to establish design allowables, such as in the case of sheet-stiffener compression tests, the test results should be reduced through use of a materials correction factor to values which would be met by material having the design allowable material properties for the part under consideration. The ANC–5 Bulletin outlines methods of accomplishing this reduction but these are by no means considered as the only methods available.

(d) Use of design values greater than the guaranteed minimums is permissible in applications where only guaranteed minimum values are normally permitted provided that the higher values are substantiated by "premium selection" of the material. These increased design allowables will be acceptable providing that a specimen or specimens of each individual item are tested prior to its use, to assure that the strength properties of the particular item will equal or exceed the properties to be used in design. Such quality control should also be exercised for the manufacture of spare parts.

(20 F. R. 2278, Apr. 8, 1955, effective Apr. 30, 1955.)

4b.307 *Special factors.* Where there is uncertainty concerning the actual strength of a particular part of the structure, or where the strength is likely to deteriorate in service prior to normal replacement of the part, or where the strength is subject to appreciable variability due to uncertainties in manufacturing processes and inspection methods, the factor of safety prescribed in section 4b.200 (a) shall be multiplied by a special factor of a value such as to make the probability of the part being understrength from these, causes extremely remote. The following special factors shall be used:

(a) *Casting factors.*

(1) Where only visual inspection of a casting is to be employed, the casting factor shall be 2.0, except that it need not exceed 1.25 with respect to bearing stresses.

(2) It shall be acceptable to reduce the factor of 2.0 specified in subparagraph (1) of this paragraph to a value of 1.25 if such a reduction is substantiated by testing at least three sample castings and if the sample castings

[8] The ANC–5 Bulletin "Strength of Metal Aircraft Elements" specifies "A" and "B" values for allowable design properties. The "A" values are those which the material producer has indicated to be the minimum he expects for the given material. The only values considered guaranteed values are the tensile ultimate and tensile yield "A" values which have been published by the material producer for the grain direction accepted for commercial guarantees. The "B" values represent design properties which the materials producers have indicated will be met or exceeded by 90 percent of the material supplied by them. More detailed information on the derivation of related design mechanical properties can be obtained by referring to section 3.111 "Design Mechanical Properties" of the ANC–5 Bulletin.

as well as all production castings are visually and radiographically inspected in accordance with an approved inspection specification. During these tests the samples shall withstand the ultimate load multiplied by the factor of 1.25 and in addition shall comply with the corresponding limit load multiplied by a factor of 1.15.

(3) Casting factors other than those contained in subparagraphs (1) and (2) of this paragraph shall be acceptable if they are found to be appropriately related to tests and to inspection procedures.

(4) A casting factor need not be employed with respect to the bearing surface of a part if the bearing factor used (see paragraph (b) of this section) is of greater magnitude than the casting factor.

(b) *Bearing factors.*

(1) Bearing factors shall be used of sufficient magnitude to provide for the effects of normal relative motion between parts and in joints with clearance (free fit) which are subject to pounding or vibration. (Bearing factor values for control surface and system joints are specified in sections 4b.313 (a) and 4b.329 (b).)

(2) A bearing factor need not be employed on a part if another special factor prescribed in this section is of greater magnitude than the bearing factor.

(c) *Fitting factors.*

(1) A fitting factor of at least 1.15 shall be used on all fittings the strength of which is not proven by limit and ultimate load tests in which the actual stress conditions are simulated in the fitting and the surrounding structure. This factor shall apply to all portions of the fitting, the means of attachment, and the bearing on the members joined.

(2) In the case of integral fittings the part shall be treated as a fitting up to the point where the section properties become typical of the member.

(3) The fitting factor need not be employed where a type of joint made in accordance with approved practices is based on comprehensive test data, e. g., continuous joints in metal plating, welded joints, and scarf joints in wood.

(4) A fitting factor need not be employed with respect to the bearing surface of a part if the bearing factor used (see paragraph (b) of this section) is of greater magnitude than the fitting factor.

4b.308 *Flutter, deformation, and vibration.* Compliance with the following provisions shall be shown by such calculations, resonance tests, or other tests as are found necessary by the Administrator.

(a) *Flutter prevention.* The airplane shall be designed to be free from flutter of wing and tail units, including all control and trim surfaces, and from divergence (i. e. unstable structural distortion due to aerodynamic loading), at all speeds up to 1.2 V_D. A smaller margin above V_D shall be acceptable if the characteristics of the airplane (including the effects of compressibility) render a speed of 1.2 V_D unlikely to be achieved, and if it is shown that a proper margin of damping exists at speed V_D. In the absence of more accurate data, the terminal velocity in a dive of 30 degrees to the horizontal shall be acceptable as the maximum speed likely to be achieved. If concentrated balance weights are used on control surfaces, their effectiveness and strength, including supporting structure, shall be substantiated. If control surface flutter dampers are installed to meet the requirements of this section, it shall be shown that a single failure in the flutter damper system will not preclude continued safe flight of the airplane at any speed up to V_D.

(b) *Loss of control due to structural deformation.* The airplane shall be designed to be free from control reversal and from undue loss of longitudinal, lateral, and directional stability and control as a result of structural deformation, including that of the control surface covering, at all speeds up to the speed prescribed in paragraph (a) of this section for flutter prevention.

(c) *Vibration and buffeting.* The airplane shall be designed to withstand all vibration and buffeting which might occur in any likely operating conditions.

Control Surfaces

4b.310 *General.* The requirements of sections 4b.311 through 4b.313 shall apply to the design of fixed and movable control surfaces.

4b.311 *Proof of strength.*

(a) Control surface limit load tests shall be conducted to prove compliance with limit load requirements.

(b) Control surface tests shall include the horn or fitting to which the control system is attached.

(c) Analyses or individual load tests shall be conducted to demonstrate compliance with the special factor requirements for control surface hinges. (See secs. 4b.307 and 4b.313 (a).)

4b.312 *Installation.*

(a) Movable tail surfaces shall be so installed that there is no interference between any two surfaces when one is held in its extreme position and all the others are operated through their full angular movement.

(b) When an adjustable stabilizer is used, stops shall be provided which will limit its travel, in the event of failure of the adjusting mechanism, to a range equal to the maximum required to trim the airplane in accordance with section 4b.140.

4b.313 *Hinges.*

(a) Control surface hinges, except ball and roller bearings, shall incorporate a special factor of not less than 6.67 with respect to the ultimate bearing strength of the softest material used as a bearing.

(b) For hinges incorporating ball or roller bearings, the approved rating of the bearing shall not be exceeded.

(c) Hinges shall provide sufficient strength and rigidity for loads parallel to the hinge line.

Control Systems

4b.320 *General.*

(a) All controls and control systems shall operate with ease, smoothness, and positiveness appropriate to their function. The elements of the flight control system shall incorporate design features or shall be distinctively and permanently marked to minimize the possibility of incorrect assembly which could result in malfunctioning of the control system. Tab control systems shall be such that disconnection or failure of any element at speeds up to V_C cannot jeopardize the safety of flight. (See also secs. 4b.308, 4b.350, and 4b.353.) An adjustable stabilizer shall incorporate means to permit, after the occurrence of any reasonably probable single failure of the actuating system, such adjustment as would be necessary for continued safety of the flight.

(b) Power boost and power-operated control systems shall be designed in accordance with the provisions of subparagraphs (1) and (2) of this paragraph

(1) When a power boost or power-operated control system is used, an alternate system shall be immediately available such that any single failure in the power portion shall not preclude continued safe flight and landing. Such alternate system may be a duplicate power portion or a manually operated mechanical system. The power portion shall include the power source (e.g., hydraulic pumps), and such items as valves, lines, and actuators. The failure of mechanical parts (such as piston rods and links) and the jamming of power cylinders need not be considered if such failure or jamming is considered to be extremely remote.

(2) Both the primary and alternate systems shall be operable in the event of a single engine failure. For airplanes with more than two engines, at least one system shall be operable in the event of failure of any two engines. It shall be shown by analysis that in the event of loss of power on all engines, the airplane is not uncontrollable.

4b.321 *Two-control airplanes.* Two-control airplanes shall be capable of continuing safely in flight and landing in the event of failure of any one connecting element in the directional-lateral flight control system.

4b.322 *Trim controls and systems.*

(a) Trim controls shall be designed to safeguard against inadvertent or abrupt operation.

(b) Each trim control shall operate in the plane and with the sense of motion of the airplane. (See fig. 4b–16.)

(c) Means shall be provided adjacent to the trim control to indicate the direction of the control movement relative to the airplane motion.

(d) Means shall be provided to indicate the position of the trim device with respect to the range of adjustment. The indicating means shall be clearly visible.

(e) Trim devices shall be capable of continued normal operation in the event of failure of any one connecting or transmitting element of the primary flight control system.

(f) All trim control systems shall be designed to prevent creeping in flight. Trim tab controls shall be irreversible, unless the tab is appropriately balanced and shown to be free from flutter.

(g) Where an irreversible tab control system is employed, the portion from the tab to the attachment of the irreversible unit to the airplane structure shall consist of a rigid connection.

4b.323 *Wing flap controls.*

(a) The wing flap controls shall operate in a manner to permit the flight crew to place the flaps in all of the take-off, en route, approach, and landing positions established under section 4b.111 and to maintain these positions thereafter without further attention on the part of the crew, except for flap movement produced by an automatic flap positioning or load limiting device.

(b) The wing flap control shall be located and designed to render improbable its inadvertent operation.

(c) The rate of motion of the wing flap in response to the operation of the control and the characteristics of the automatic flap positioning or load limiting device shall be such as to obtain satisfactory flight and performance characteristics under steady or changing conditions of air speed, engine power, and airplane attitude.

(d) The wing flap control shall be designed to retract the flaps from the fully extended position during steady flight at maximum continuous engine power at all speeds below V_F+10 (m. p. h.).

(e) Means shall be provided to indicate the take-off, en route, approach, and landing flap positions.

(f) If any extension of the flaps beyond the landing position is possible, the flap control shall be clearly marked to identify such range of extension.

4b.324 *Wing flap interconnection.*

(a) The motion of wing flaps on opposite sides of the plane of symmetry shall be synchronized by a mechanical interconnection unless the airplane is demonstrated to have safe flight characteristics while the flaps are retracted on one side and extended on the other. When a mechanical interconnection is employed means shall be provided to insure against hazardous unsymmetrical operation of the wing flaps after any reasonably possible single failure of the flap actuating system.

(b) Where a wing flap interconnection is used, it shall be designed to account for the applicable unsymmetrical loads, including those resulting from flight with the engines on one side of the plane of symmetry inoperative and the remaining engines at take-off power. For airplanes with flaps which are not subjected to slipstream conditions, the structure shall be designed for the loads imposed when the wing flaps on one side are carrying the most severe load occurring in the prescribed symmetrical conditions and those on the other side are carrying not more than 80 percent of that load.

4b.324–1 *Procedure for demonstrating wing flaps that are not interconnected (FAA policies which apply to sec. 4b.324 (a)).* If the wing flaps are not mechanically interconnected, tests should be conducted to simulate flap malfunctioning (to the extent of the flaps being retracted on one side and extended on the other) during takeoffs, approaches, and landings to demonstrate that the airplane is safe under these conditions.

(19 F. R. 4461, July 20, 1954, effective Sept. 1, 1954.)

4b.325 *Control system stops.*

(a) All control systems shall be provided with stops which positively limit the range of motion of the control surfaces.

(b) Control system stops shall be so located in the system that wear, slackness, or take-up adjustments will not affect adversely the control characteristics of the airplane because of a change in the range of surface travel.

(c) Control system stops shall be capable of withstanding the loads corresponding with the design conditions for the control system.

4b.326 *Control system locks.* Provision shall be made to prevent damage to the control surfaces (including tabs) and the control system which might result from gusts striking the airplane while it is on the ground or water (see also sec. 4b.226). If a device provided for this purpose, when engaged, prevents normal operation of the control surfaces by the pilot, it shall comply with the following provisions.

(a) The device shall either automatically disengage when the pilot operates the primary

flight controls in a normal manner, or it shall limit the operation of the airplane in such a manner that the pilot receives unmistakable warning at the start of take-off.

(b) Means shall be provided to preclude the possibility of the device becoming inadvertently engaged in flight.

4b.327 *Static tests.* Tests shall be conducted on control systems to show compliance with limit load requirements in accordance with the following provisions.

(a) The direction of the test loads shall be such as to produce the most severe loading in the control system.

(b) The tests shall include all fittings, pulleys, and brackets used in attaching the control system to the main structure.

(c) Analyses or individual load tests shall be conducted to demonstrate compliance with the special factor requirements for control system joints subjected to angular motion. (See secs. 4b.307 and 4b.329 (b).)

4b.328 *Operation tests.* An operation test shall be conducted for each control system by operating the controls from the pilot compartment with the entire system loaded to correspond with 80 percent of the limit load specified for the control system. In this test there shall be no jamming, excessive friction, or excessive deflection.

4b.329 *Control system details; general.* All details of control systems shall be designed and installed to prevent jamming, chafing, and interference from cargo, passengers, and loose objects. Precautionary means shall be provided in the cockpit to prevent the entry of foreign objects into places where they would jam the control systems. Provisions shall be made to prevent the slapping of cables or tubes against other parts of the airplane. The following detail requirements shall be applicable with respect to cable systems and joints.

(a) *Cable systems.*

(1) Cables, cable fittings, turnbuckles, splices, and pulleys shall be of an approved type.

(2) Cables smaller than ⅛-inch diameter shall not be used in the aileron, elevator, or rudder systems.

(3) The design of cable systems shall be such that there will be no hazardous change in cable tension throughout the range of travel under operating conditions and temperature variations.

(4) Pulley types and sizes shall correspond with the cables used.

(5) All pulleys and sprockets shall be provided with closely fitted guards to prevent the cables and chains being displaced or fouled.

(6) Pulleys shall lie in the plane passing through the cable within such limits that the cable does not rub against the pulley flange.

(7) Fairleads shall be so installed that they do not cause a change in cable direction of more than 3°.

(8) Clevis pins (excluding those not subject to load or motion) retained only by cotter pins shall not be used in the control system.

(9) Turnbuckles attached to parts having angular motion shall be installed to prevent positively any binding throughout the range of travel.

(10) Provision for visual inspection shall be made at all fairleads, pulleys, terminals, and turnbuckles.

(b) *Joints.*

(1) Control system joints subjected to angular motion in push-pull systems, excepting ball and roller bearing systems, shall incorporate a special factor of not less than 3.33 with respect to the ultimate bearing strength of the softest material used as a bearing.

(2) It shall be acceptable to reduce the factor specified in subparagraph (1) of this paragraph to a value of 2.0 for joints in cable control systems.

(3) The approved rating of ball and roller bearings shall not be exceeded.

4b.329–1 *Installation of turnbuckles (FAA policies which apply to sec. 4b.329 (a)).* Fork ends of turnbuckles should not be attached directly to control surface horns or to bellcrank arms unless a positive means (such as the use of shackles, links, universal joints, spacer bushings, ball bearings, etc.) is used to prevent binding of turnbuckles relative to the horns or bellcrank arms or unless it can be shown that turnbuckles have adequate strength assuming one end fixed to the horn or arm and the design cable loads pulling off the other end at 5° to the turnbuckle axis. There should be no interference between the horns or bellcrank

arms and the fork ends of turnbuckles throughout the range of motion of the control surfaces.

(20 F. R. 2278, Apr. 8, 1955, effective Apr. 30, 1955.)

4b.329–2 *Safetying of turnbuckles (FAA policies which apply to sec. 4b.329).* Section 4b.300 requires in part that there be no design features or details which experience has shown to be hazardous or unreliable. Experience has shown that the reliability of turnbuckles should be insured by safetying with wire as shown in Figure 5. After safetying the turnbuckle, no more than three threads should be exposed on either side of the turnbuckle barrel and the ends of each safety wire should be securely fastened by at least four wraps. A turnbuckle safetying guide is given in table 1.

TABLE 1. TURNBUCKLE SAFETYING GUIDE

Cable size	Minimum Breaking Strength, Pounds				Type of wrap	Diameter of safety wire	Material (Annealed Condition)
	MIL–C–1511 Steel (Carbon) Flexible, Preformed		MIL–C–5424 Steel (Corrosion-Resisting) Flexible, Preformed				
	7 x 7	7 x 19	7 x 7	7 x 19			
Inch						*Inch*	
1/16	480		480		Single	0.040	Copper, brass, galvanized or tinned steel, soft iron, or monel.
3/32	920		920		Single	.040	Copper, brass, galvanized or tinned steel, soft iron, or monel.
1/8		2000		1760	Single	.040	Stainless steel.
1/8		2000		1760	Double	.040	Copper, brass, galvanized or tinned steel, soft iron, or monel.
3/32 and greater		2800		2400	Double	.040	Galvanized or tinned steel, soft iron, stainless steel, or monel.
5/32 and greater		2800		2400	Double	.051	Copper, brass.

NOTES

1. The swaged and unswaged turnbuckle assemblies are covered by AN Standard Drawings.
2. Certain of the AN Std. swaged terminal parts specify a safety wire hole size of .047 in. This hole may be reamed sufficiently to accomodate the .040 and .051 diameter wires.
3. The double wrap procedure given in Navy Specification PO–42A, Amendment No. 1, or the safetying procedure described by Air Force-Navy Aeronautical Design Standard AND 10482, may be used in lieu of the method shown in Figure 5.

(20 F. R. 2278, Apr. 8, 1955, effective Apr. 30, 1955.)

4b.329–3 *Approval of control system components (FAA policies which apply to sec. 4b.329 (a)).* The Administrator does not issue specific approvals as such for cables, cable fittings, turnbuckles, splices, pulleys, etc., for general use on aircraft. Approval is limited to its use as part of a specific airplane design. Conformance with established industry or military specifications or adequate substantiation of the manufacturer's own design, are the procedures utilized in complying with the "approved type" requirement.

(20 F. R. 2279, Apr. 8, 1955, effective Apr. 30, 1955.)

4b.329–4 *Cable terminals (FAA policies which apply to sec. 4b.329 (a)).* The selection of cable terminal locations and their proximities should minimize the possibility of interferences with structure, fairleads, other terminals, etc., and the possibility of pairing wrong cables during maintenance or overhaul.

(20 F. R. 2279, Apr. 8, 1955, effective Apr. 30, 1955.)

4b.329–5 *Bellcrank and idler installation (FAA policies which apply to sec. 4b.329 (b)).* The design of such items as bellcrank arms, tab drums, idlers, etc., should minimize the possi-

bility of inadvertent installation in the reversed direction, or, as an alternative, to preclude the possibility of jamming or interference that might result from such reversed installation.

(20 F. R. 2279, Apr. 8, 1955, effective Apr. 30, 1955.)

4b.329–6 *Ball and roller bearings (FAA policies which apply to sec. 4b.329 (b) (3)).* The "approved ratings" of ball and roller bearings referred to are the ratings established in ANC–5, "Strength of Metal Aircraft Elements".

(20 F. R. 2279, Apr. 8, 1955, effective Apr. 30, 1955.)

Landing Gear

4b.330 ***General.*** **The requirements of sections 4b.331 through 4b.338 shall apply to the complete landing gear.**

4b.331 ***Shock absorbers.***

(a) The shock absorbing elements for the main, nose, and tail wheel units shall be substantiated by the tests specified in section 4b.332.

(b) The shock absorbing ability of the landing gear in taxying shall be demonstrated by the tests prescribed in section 4b.172.

4b.332 ***Landing gear tests.*** **The landing gear shall withstand the following tests.**

(a) ***Shock absorption tests.***

(1) It shall be demonstrated by energy absorption tests that the limit load factors selected for design in accordance with section 4b.230 (b) for take-off and landing weights, respectively, will not be exceeded.

(2) In addition to the provisions of subparagraph (1) of this paragraph, a reserve of energy absorption shall be demonstrated by a test simulating an airplane descent velocity of 12 f. p. s. at design landing weight, assuming wing lift not greater than the airplane weight acting during the landing impact. In this test the landing gear shall not fail. (See paragraph (c) of this section.)

(b) ***Limit drop tests.***

(1) If compliance with the limit landing conditions specified in paragraph (a) (1) of this section is demonstrated by free drop tests, these shall be conducted on the complete airplane, or on units consisting of wheel, tire, and shock absorber in their proper relation. The free drop heights shall not be less than the following:

(i) 18.7 inches for the design landing weight conditions,

(ii) 6.7 inches for the design take-off weight conditions.

(2) If wing lift is simulated in free drop tests the landing gear shall be dropped with an effective mass equal to:

$$W_e = W\left(\frac{h+(1-L)d}{h+d}\right);$$

where:

W_e = the effective weight to be used in the drop test (lbs.),

h = specified free drop height (inches),

d = deflection under impact of the tire (at the approved inflation pressure) plus the vertical component of the axle travel relative to the drop mass (inches),

$W = W_M$ for main gear units (lbs.), equal to the static weight on the particular unit with the airplane in the level attitude (with the nose wheel clear in the case of nose wheel type airplanes),

$W = W_T$ for tail gear units (lbs.), equal to the static weight on the tail unit with the airplane in the tail-down attitude,

$W = W_N$ for nose wheel units (lbs.), equal to the vertical component of the static reaction which would exist at the nose wheel, assuming the mass of the airplane acting at the center of gravity and exerting a force of 1.0g downward and 0.25g forward,

L = the ratio of the assumed wing lift to the airplane weight, not in excess of 1.0.

(3) The attitude in which a landing gear unit is drop tested shall simulate the airplane landing condition critical for the unit.

(4) The value of d used in the computation of W_e in subparagraph (2) of this paragraph shall not exceed the value actually obtained in the drop test.

(c) ***Reserve energy absorption drop tests.***

(1) If compliance with the reserve energy absorption condition specified in paragraph (a) (2) of this section is demonstrated by free drop

tests, the landing gear units shall be dropped from a free drop height of not less than 27 inches.

(2) If wing lift equal to the airplane weight is simulated, the units shall be dropped with an effective mass equal to:

$$W_e = W\left(\frac{h}{h+d}\right);$$

where the symbols and other details are the same as in paragraph (b) of this section.

4b.333 *Limit load factor determination.*

(a) In determining the airplane inertia limit load factor n from the free drop tests specified in section 4b.332, the following formula shall be used:

$$n = n_j\frac{W_e}{W} + L;$$

where:

n_j=the load factor during impact developed on the mass used in the drop test (i. e., the acceleration dv/dt in g's recorded in the drop test plus 1.0). (See sec. 4b.332 (b) (2) for explanation of W_e, W, and L).

(b) The value of n determined in paragraph (a) of this section shall not be greater than the limit load factor used for the landing conditions. (See sec. 4b.230 (b).)

4b.334 *Retracting mechanism.*

(a) *General.*

(1) The landing gear retracting mechanism, wheel well doors, and supporting structure shall be designed for the loads occurring in the flight conditions when the gear is in the retracted position, and for the combination of friction, inertia, brake torque, and air loads occurring during retraction and extension at any air speed up to 1.6 V_{S_1} (flaps in the approach position at design landing weight), and any load factor up to those specified in section 4b.212 for the flaps extended condition.

(2) The landing gear, the retracting mechanism, and the airplane structure including wheel well doors shall be designed to withstand the flight loads occurring with the landing gear in the extended position at any speed up to 0.67 V_C, unless other means are provided to decelerate the airplane in flight at this speed.

(3) Landing gear doors, their operating mechanism, and their supporting structure shall be designed for the conditions of air speed and load factor prescribed in subparagraphs (1) and (2) of this paragraph, and in addition they shall be designed for the yawing maneuvers prescribed for the airplane.

(b) *Landing gear lock.* A positive means shall be provided for the purpose of maintaining the landing gear in the extended position. A means shall be provided to prevent the retraction of the landing gear while the airplane is on the ground.

(c) *Emergency operation.* Emergency means of extending the landing gear shall be provided, so that the landing gear can be extended in the event of any reasonably probable failure in the normal retraction system. In any case the emergency system shall provide for the failure of any single source of hydraulic, electric, or equivalent energy supply.

(d) *Operation test.* Proper functioning of the landing gear retracting mechanism shall be demonstrated by operation tests.

(e) *Position indicator and warning device.*

(1) When a retractable landing gear is used, means shall be provided for indicating to the pilot when the gear is secured in the extended and in the retracted positions.

(2) In addition to the requirement of subparagraph (1) of this paragraph, landplanes shall be provided with an aural warning device which will function continuously when all throttles are closed if the gear is not fully extended and locked.

(3) If a manual shutoff for the warning device prescribed in subparagraph (2) of this paragraph is provided, it shall be installed so that reopening the throttles will reset the warning mechanism.

(f) *Control.* The location and operation of the landing gear retraction control shall be according to the provisions of section 4b.353.

4b.334–1 *Procedure for testing landing gear retracting system (FAA policies which apply to sec. 4b.334).*

(a) *General, section 4b.334 (a).* The ability to extend and retract the landing gear at a speed of at least 1.6 V_{S_1} should be demonstrated. If no other satisfactory means of decelerating the airplane are provided (such as dive brakes or other high drag devices), the ability of the landing gear retracting mechanism and wheel

well doors to withstand the flight loads should be demonstrated under the following conditions:

Power required for level flight.
Airspeed, at least 0.67 V_C.
Landing gear extended.

(b) *Emergency operation, section 4b.334 (c).* Extending the landing gear by use of the emergency system for demonstrating compliance with the requirement of this section may be accomplished during other tests in the flight program.

(c) *Operation test, section 4b.334 (d).* The time required to retract the landing gear at speed V_2 (see sec. 4b.116 (b)) should be demonstrated in flight under the following conditions:

Weight—optional.
C. G. position—optional.
Operating engine(s)—takeoff power.
Critical inoperative engine—propeller windmilling on engine most critical from the gear retraction standpoint.

It is also desirable to obtain the time required to extend the landing gear for purposes of information.

(19 F. R. 4961, July 20, 1954, effective Sept. 1, 1954.)

4b.334–2 *Landing gear position indicator switches (FAA interpretations which apply to sec. 4b.334 (e)).* The phrase "means shall be provided for indicating to the pilot" includes a landing gear position indicator as well as the switches necessary to actuate such indicator. The switches must be so located and coupled to the landing gear mechanical system as to preclude the possibility of an erroneous indication of "down and locked" if the landing gear is not in a fully extended position, or "up and locked" if the landing gear is not in the completely retracted position. Location of the switches so that they are operated by the actual landing gear locking latch or device is an acceptable method of compliance with the requirements of this section.

(21 F. R. 2747, Apr. 28, 1956, effective May 25, 1956.)

4b.335 *Wheels.* Main wheels and nose wheels shall be of an approved type. The following provisions shall apply.

(a) The maximum static load rating of each main wheel and nose wheel shall not be less than the corresponding static ground reaction under the design take-off weight of the airplane and the critical center of gravity position.

(b) The maximum limit load rating of each main wheel and nose wheel shall not be less than the maximum radial limit load determined in accordance with the applicable ground load requirements of this part (see secs. 4b.230 through 4b.236).

(c) The brake kinetic energy capacity rating of each main wheel-brake assembly shall not be less than the kinetic energy absorption requirement determined in accordance with this paragraph. The brake kinetic energy absorption requirements shall be based on a rational analysis of the sequence of events which are expected to occur during operational landings at maximum landing weight. This analysis shall include conservative values of airplane speed at which the brakes are applied, braking coefficient of friction between tires and runway, aerodynamic drag, propeller drag or powerplant forward thrust, and if more critical, the most adverse single engine or propeller malfunction. In lieu of a rational analysis it shall be acceptable to establish the kinetic energy absorption requirements for each main wheel brake assembly by the following formula:

$$KE=\frac{0.0334WV_{s_0}^2}{N};$$

where:

KE=kinetic energy per wheel (ft. lb.);
W=design landing weight (lb.);
V_{s_0}=power-off stalling speed of the airplane (mph) at sea level at the design landing weight and in the landing configuration;
N=number of main wheels.

NOTE: The expression for kinetic energy assumes an equal distribution of braking between main wheels. In cases of unequal distribution the expression requires appropriate modification.

(d) The minimum stalling speed rating of each main wheel-brake assembly, i. e., the initial speed used in the dynamometer tests, shall not be greater than the V_{s_0} used in the determination of kinetic energy in accordance with paragraph (c) of this section.

NOTE: The provision of this paragraph is based upon the assumption that the testing procedures for wheel-

brake assemblies involve a specified rate of deceleration, and, therefore, for the same amount of kinetic energy the rate of energy absorption (the power absorbing ability of the brake) varies inversely with the initial speed.

4b.336 *Tires.* Landing gear tires shall be of a proper fit on the rim of the wheel, and of load ratings which are not exceeded under the following conditions:

(a) Main wheel tires: Equal static loads on all main wheel tires corresponding with the most critical combination of maximum take-off weight and center of gravity position.

(b) Nose wheel tires: Equal loads on all nose wheel tires corresponding with the following conditions:

(1) The static ground reaction per tire corresponding with the most critical combination of take-off weight and center of gravity position. This load shall correspond with the static rating of the tire.

(2) The dynamic ground reaction per tire at maximum landing weight, assuming the mass of the airplane concentrated at the most critical location of the center of gravity for this weight and exerting a force of 1.0g downward and 0.31g forward, the reactions being distributed to the nose and main wheels by the principles of statics with a 0.31g drag reaction at the ground applied at those wheels which have brakes. This load shall correspond with the dynamic rating of the tire.

(3) The dynamic ground reaction per tire at design take-off weight, assuming the mass of the airplane concentrated at the most critical location of the center of gravity for this weight and exerting a force of 1.0g downward and 0.20g forward, the reactions being distributed to the nose and main wheels by the principles of statics with a 0.20g drag reaction at the ground applied at those wheels which have brakes. This load shall correspond with the dynamic rating of the tire.

4b.337 *Brakes.*

(a) *General.*

(1) The airplane shall be equipped with brakes of an approved type. The brake ratings shall be in accordance with section 4b.335 (c) and (d).

(2) The brake system shall be so designed and constructed that in the event of a single failure in any connecting or transmitting element in the brake system (excluding the operating pedal or handle), or the loss of any single source of hydraulic or other brake operating energy supply, it shall be possible to bring the airplane to rest under conditions specified in section 4b.122 with a mean deceleration during the landing roll of at least 50 percent of that obtained in determining the landing distance as prescribed in that section.

(3) In applying the requirement of subparagraph (2) of this paragraph to hydraulic brakes, the brake drum, shoes, and actuators (or their equivalents) shall be considered as connecting or transmitting elements, unless it is shown that the leakage of hydraulic fluid resulting from failure of the sealing elements in these units would not reduce the braking effectiveness below that specified in subparagraph (2) of this paragraph.

(b) *Brake controls.* Brake controls shall not require excessive control forces in their operation.

(c) *Parking brake controls.* A parking brake control shall be provided and installed so that it can be set by the pilot and, without further attention, will maintain sufficient braking to prevent the airplane from rolling on a paved, level runway while take-off power on the critical engine is being applied.

(d) *Anti-skid devices.* If anti-skid devices are installed, the devices and associated systems shall be such that no single probable malfunction will result in a hazardous loss of braking ability or directional control of the airplane.

Discussion of Policies Relating to Brake Tests in Section 4b.337–1

The requirements of section 4b.337 are based upon the fact that compliance with the operating rules of section 40.70 of this subchapter will require great dependence upon the presence and proper functioning of brakes unless the runways involved are unusually long.

The nature and extent of the tests to show compliance with section 4b.337 (a) will necessarily depend upon a great many things such as the general arrangement of the landing gear, the design of the brake system, the extent to which the capacity of the brakes is used in establishing the landing distance required by section 4b.122, the amount of available performance data for the brakes, etc. The simplest possible procedure appears to be to determine the average deceleration during a landing ground roll without the use of brakes and then establish the landing distance required by section 4b.122 by using the brakes to the extent necessary to double the mean deceleration so established. It appears likely, however, that this procedure would result in excessive landing distance and might seriously limit the use of the airplane in operation.

4b.337–1 *Brake tests (FAA policies which apply to sec. 4b.337).* If it is desired by the applicant to make the maximum possible use of the brakes in establishing the landing distance, and if also the contribution of the brakes to the total deceleration is relatively large, the brake system should be designed to permit the application of slightly less than half the braking deceleration developed under the conditions specified in this section. The following dual system is recommended: Dual wheel elements (drums or disc units), transmitting elements, power sources, master cylinders, etc., connected to a single pedal on each rudder pedal, such that the failure of any single one of these would leave half the total braking capacity symmetrically disposed about the plane of symmetry of the airplane. With such a system it should be possible to show compliance with section 4b.337 (a) by means of calculation based upon the test data necessary to establish the landing distance plus the brake data calculated by the aircraft manufacturer.

If the system is designed so that under the conditions here specified appreciably less than half the total braking capacity remains or if the remaining capacity is asymmetrically disposed, tests should be conducted to determine that half the mean deceleration may in fact be developed and/or that the airplane may be safely controlled directionally while doing so.

(a) Rescinded.

(b) *Brake controls, section 4b.337 (b).* General brake control force and operation should be noted throughout the flight test program to determine that they are satisfactory.

(c) *Parking brake controls, section 4b.337 (c).* During engine run-up prior to takeoff for other tests, the parking brake control should be set, and without further attention, a demonstration should be made to determine that sufficient braking is maintained to prevent the airplane from rolling on a paved runway while takeoff power is applied on the most critical engine.

(19 F. R. 4461, July 20, 1954, effective Sept. 1, 1954; amended 22 F. R. 6963, Aug. 29, 1957, effective Sept. 15, 1957.)

4b.337–2 *Brake systems (FAA policies which apply to sec. 4b.337).* In order to obtain a minimum landing distance under section 4b.122 and at the same time meet the deceleration requirement of section 4b.337 (a) (2) in event of failure of the normal brake system, it is a common practice to provide an alternate brake system. When hydraulic (or pneumatic) brakes are used in the normal brake system, this alternate means usually consists of a duplicate hydraulic or pneumatic brake system and is commonly referred to as the "emergency brake system." The following items should be considered in the design of such systems:

(a) *Relationship between normal and emergency brake systems.* The systems for actuating the normal brake and the emergency brake should be so separated that a failure in, or the leakage of fluid from, one system will not render the other system inoperative. A hydraulic brake assembly may be common to both the normal and emergency brake systems if it is shown that the leakage of hydraulic fluid resulting from failure of the sealing elements in the brake assembly would not reduce the braking effectiveness below that specified in section 4b.337 (a) (2).

(b) *Brake control valves.* In the normal brake system of all aircraft, the brake control valves should be of a type such that the pilots may exercise variable control of the pressure to the

brakes. The foregoing provision need not necessarily apply to the emergency brake systems although obviously such a provision would be desirable. Flight tests should be conducted to determine that the normal and emergency brake systems fulfill the requirements of section 4b.170 (a) and (b).

In the normal brake systems of tail wheel type aircraft or of nose wheel type aircraft equipped with nonsteerable nose wheels, provisions should be made for independently controlling the brakes on either side of the main landing gear in order that directional control of the aircraft can be maintained. (See sec. 4b.171 (c).) In the emergency brake systems of tail wheel type aircraft and in the normal and emergency brake systems of nose wheel type aircraft, it is desirable that independent control of the brakes on either side of the landing gear be provided although such control is optional.

(19 F. R. 4461, July 20, 1954, effective Sept. 1, 1954.)

4b.337–3 *Replacement or modified brakes (FAA policies which apply to sec. 4b.337).*

(a) *General.* Replacement or modified brake installations may be approved on the basis of dynamometer tests together with functional flight tests in lieu of measured accelerate-stop and landing distance flight tests if the decelerate performance based on dynamometer data is shown to be equal to or better than the original airplane flight test decelerate performance. Dynamometer tests which simulate actual airplane decelerate-distance tests may incorporate variable kinetic energy absorption rates simulating flight test deceleration conditions, and may include an energy allowance for the aerodynamic drag of the airplane which occurs during the deceleration portion of the accelerate-stop and landing runs. However, if any improvement in decelerate performance over that shown in the original Airplane Flight Manual is desired, then this policy is inapplicable and complete airplane flight tests will be required.

(1) The procedures of (c) through (g) may be used for substantiating replacement or modified brake installations and may be applied to approved brakes of any manufacturer. The replacement brake does not have to be manufactured by the maker of the original brake.

(2) Brakes which have been approved under TSO or preceding approval standards (whichever is pertinent) may be approved as a replacement brake on an existing airplane type upon the presentation of test reports and other pertinent computations showing:

(i) That, insofar as deceleration performance is concerned, the replacement or modified brakes are equal to or better than the original brake installation on the basis of dynamometer tests contained in this section, and

(ii) That, the replacement or modified brakes when installed on the airplane, comply with the ground handling requirements of section 4b.170.

(b) *Brake modifications.* Modifications to a previously approved wheel-brake installation involving changes to component parts which will involve variations in kinetic energy absorption characteristics should be subjected to the dynamometer tests contained in (b) (1) in addition to the dynamometer tests specified in (e) and (f) for the accelerate-stop and landing conditions and should also include a check of operating and ground handling characteristics. Typical modifications which vary the kinetic energy absorption characteristics are as follows: changes of brake lining material, changes in brake discs or brake drum material, reductions in friction surface plan dimensions (area), etc.

(1) The minimum reliability standards for brakes referenced in TSO–C26 and contained in Specification AS227A should be used as a guide for modified brakes. However, section 5.4.3 of AS227A may be applied as follows for evaluating such modifications:

(i) Thirty tests simulating the stopping of an airplane at 100 percent kinetic energy.[9]

(ii) One test simulating the stopping of an airplane at 125 percent kinetic energy.[9]

(c) *Determination of kinetic energy requirements.*

(1) In the case of replacement brakes (that is, those brakes incorporating major design differences from those originally tested on the airplane) the kinetic energy (KE) to be absorbed on the dynamometer in compliance with

[9] The modifier of the brake should substantiate the fact that the original brake approval tests and the tests specified in (i) and (ii) were conducted under similar conditions and that the modified brake assembly is at least the equal to that previously approved as an equipment item insofar as energy absorption and stopping time are concerned.

provision (a) (2) of this section should be determined in accordance with the following formula:

$$KE_{dyn} = KE_{wv} - \tfrac{1}{2} KE_{ad}$$

where:

KE_{wv} = the maximum kinetic energy as determined from the most critical combination of weight and speed (in terms of ground speed). In determining the maximum speed, the effects of tailwind, altitude and flap setting should be taken into account.

KE_{ad} = the kinetic energy absorbed by aerodynamic drag of the airplane during the deceleration portion of the accelerate-stop and landing runs. This kinetic energy should be determined from available test data of the airplane or by other reliable calculations based on the basic parameters for the type of airplane involved.

(2) In the case of brakes modified as described in paragraph (b) the kinetic energy to be absorbed on the dynamometer should be determined in accordance with the following formula:

$$KE_{dyn} = KE_{wv} - KE_{ad}$$

(i) This formula should not apply to modifications of a replacement brake which has been approved in accordance with (1) of this paragraph. Such modifications of a replacement brake should meet the same dynamometer requirements as the replacement brake did when originally installed.

(d) *Dynamometer test method.*

(1) There should be no artificial cooling of the brakes during dynamometer tests. Ventilating air flowing normal to the tire tread is permissible.

(2) For wheel-brake installations where dual or duplex brakes are used, the dynamometer tests should be conducted on an entire wheel-brake unit.

(3) Brake lining should not be run-in to a degree which would be greater than the run-in for new lining when installed on an airplane prior to being put in regular airline service.

(4) Due to wing-lift acting on the airplane, the dynamometer tests should account for tire rolling friction due to the differential in braking effect resulting from the varying rolling radius of the tire on the runway as compared to the constant tire radius at constant tire deflection which occurs throughout the entire dynamometer run.

(5) The dynamometer mass should be corrected so that the selected inertia equivalent (I.E.) will result in a correct or conservative kinetic energy test value.

(6) During dynamometer testing a variable brake pressure, which does not exceed that pressure which is available from the airplane brake system intended for use with the replacement brake, should be used in duplicating as nearly as practicable the original airplane torque-speed and velocity-time flight test data corrected for aerodynamic drag and tire rolling friction.

(e) *Accelerate-stop distance test.* This condition is normally the most critical from a kinetic energy standpoint. The original flight test accelerate-stop deceleration camera data obtained during the type certification tests of the airplane should be obtained and corrected for aerodynamic drag and tire rolling friction.

(1) Continuous records of dynamometer torque-speed or velocity-time data for at least three of the runs, when absorbing the required kinetic energy for the critical combination of takeoff weight and V_1 speed, should duplicate, as nearly as practical, the original airplane brake deceleration data. These dynamometer records should be converted to corrected and faired velocity versus distance values and be plotted and superimposed on the curve for the original airplane velocity-distance data, and

(2) The average of the above three corrected dynamometer velocity-distance curves should be superimposed on the curve for the original airplane velocity-distance data.

(3) The curves plotted in (1) and (2) of this paragraph should compare favorably with the original corrected flight data over the entire speed range and should indicate that, from any given speed, the airplane stopping distance would be equal to or less than the distance resulting from the original brake installation at the required kinetic energy level corresponding to the actual accelerate-stop conditions which prevailed during the airplane type certification tests.

(4) If, in compliance with (1) of this

paragraph, velocity-time data are submitted in lieu of torque-speed data, then sufficient spot-check calculations of the velocity-time data should be made to insure an accuracy comparable to the accuracy of torque-speed data. Inasmuch as torque-speed data are useful for airplane modification and design purposes, it is desirable that comparable and complete torque-speed data be included in the data submitted.

(5) Dynamometer time history recordings of brake pressure, torque, speed, and calculations for aerodynamic drag, tire rolling friction, and dynamometer mass correction, and all pertinent airplane data, should be submitted, together with an analysis showing the detailed calculations and charts necessary to establish the speed-distance relationship and comparison with the original airplane deceleration test data.

(f) *Landing distance test.* In order to substantiate landing distances, at least three dynamometer runs, using the critical combinations of landing weight and contact speed, should be conducted on the same brake unit. Landing distance data, compiled in accordance with the method described in (e) for accelerate-stop evaluation, should be submitted. The landing distance data, which are comparable to those of (e) for the accelerate-stop data, should compare favorably with the corrected airplane flight test results obtained with the original brakes in order to substantiate the adequacy of the replacement brakes, insofar as landing distances are concerned.

(g) *Aircraft functional tests.* The brakes should be tested on the airplane to determine their functional characteristics as indicated in (a) (2). Functioning characteristics should be observed during taxi and engine run-up conditions and at least three normal takeoffs and landings, at the maximum landing weight, should be conducted. During these tests, the brakes should be checked for any undesirable characteristics such as "grabbing," "fading," etc., and should at least be visually inspected, without dismantling, at the completion of the test in order to determine any evidence of malfunction or failure. If no malfunctioning has occurred, this visual inspection is adequate, but if malfunctioning does occur, a thorough inspection should be conducted. If any characteristics arise which indicate that stopping distances would exceed the original values in the FAA Approved Airplane Flight Manual, then the Administrator may require actual camera recorded airplane deceleration tests or any other tests deemed necessary to establish the adequacy of the brakes.

(19 F. R. 4463, July 20, 1954, effective Sept. 1, 1954.)

4b.337–4 *Antiskid devices and installations (FAA policies which apply to sec. 4b.337).*

(a) *Eligibility.* Antiskid devices meeting the airworthiness portions of Military Specification MIL–B–8075 (ASG) and any amendments [10] thereto, are acceptable for installation on civil aircraft. Requests for deviations from these specifications should be submitted to the FAA Regional Office, Aircraft Engineering Division. The installation of the antiskid device should comply with the requirements specified in paragraph (b) of this section. The antiskid device and its installation will be approved for use on civil aircraft when the tests specified in paragraph (c) of this section have been satisfactorily demonstrated.

(b) *Installation.*

(1) *Data required.* An engineering evaluation of the antiskid installation as installed on the airplane, including all necessary components, should be conducted. This analysis and complete descriptive data should be submitted to the FAA. The data should include hydraulic and electric schematic diagrams of the installation, assembly drawings of antiskid system units, test results or stress analysis substantiating structural strength of attachments and modification of the axle or other structural members, installation drawings, recommended instructions pertaining to installation, maintenance and operation and analysis of flight test data and results. Schematic drawings should refer to all units in the normal and emergency brake systems. The engineering evaluation should also assure that the antiskid system does not cause undesirable and adverse yaw characteristics.

(i) Engineering evaluation should account for a bounce condition wherein the wheels may leave the runway after the brakes

[10] Proposed amendments may be obtained from the Federal Aviation Agency, Washington 25, D. C.

have been applied, for a condition wherein the wheels stay on the runway but the oleos are extended (if the system utilizes landing gear oleo compression in its operation), and for a condition in which the wheels of one main gear may not be in contact with the runway for a considerable time while the wheels of the other main gear are firmly on the runway. If the antiskid installation incorporates the "landing with brake pedals depressed" feature, then this type of operation should also be considered.

(ii) It should be shown that the brake cycling frequency imposed by the antiskid installation will not result in excessive loads on the landing gear because of proximity to resonant landing gear frequencies.

(2) *Systems.* The entire brake system (including both the basic brake system and the antiskid system) should conform to section 4b.337. The single failure criterion of section 4b.337 should be extended to include the antiskid system.

(i) In the event of a probable malfunction within the antiskid system which would result in loss of the antiskid feature in one or more brake units, those brake units affected should automatically revert to normal braking.

(ii) Deleted.

(iii) A means should be provided so that the pilot or copilot can readily deactivate the antiskid system. For simple mechanical type antiskid installations wherein any single probable malfunction is considered remote and which will render only one braked wheel inoperative insofar as antiskid operation is concerned, the deactivating means need not be located in the cockpit.

(iv) Antiskid installations should not cause surge pressures in the brake hydraulic system which would be detrimental to either the normal or emergency brake system and components.

(v) The antiskid equipment should insure satisfactory operation on slippery runways as well as on dry hard surfaced runways without additional antiskid adjustments.

(c) *Tests and analyses.*

(1) When an antiskid system is included as original equipment on an airplane, it is not required that field length data,[11] with antiskid inoperative, be determined.

(2) Tests and analyses for the approval of an antiskid system to be used with a previously approved brake installation, without consideration for reduction of runway distances, should be conducted in accordance with this paragraph. When equivalent alternate procedures are developed and approved, they may be used in lieu of the method specified in this paragraph. If credit for shorter field lengths is requested on the basis of an antiskid installation, then complete flight tests should be conducted in accordance with sections 4b.115, 4b.122, 4b.123, 4b.170 and 4b.171.

(3) When an antiskid system is installed, the braking performance and airplane stopping distances should be at least equivalent to those obtained during the accelerate-stop and landing type certification tests. The tests to be conducted are based on the high speed condition as being critical, both for airplane braking as controlled by the antiskid system, and for the functional integrity of an acceptable antiskid device. However, should it become necessary for a particular type of installation, these tests may be modified as warranted.

(i) Conduct at least one accelerate-stop test at each of the following speeds: 80, 90, and 100 percent of the highest V_1 speed for which the airplane is certificated.[12] The maximum landing weight, or the lowest weight above maximum landing weight necessary to keep the airplane from leaving the runway at the highest V_1 speed, should be used in the above three tests. When appropriate, the decelerate portions of the accelerate-stop tests may be demonstrated by landings with wing flaps in takeoff position in lieu of accelerating the airplane to V_1 speed on the runway. (See also sec. 4b.115–1.)

[11] It is desirable to determine field length data with the antiskid inoperative in order that airplane operation may be conducted with antiskid inoperative if so desired by the operator.

[12] In order to assure stopping distances equivalent to those shown in the Airplane Flight Manual, camera recording, or equivalent recordation methods should be used. To ascertain that the measured stopping distances are equivalent to those in the Airplane Flight Manual it will be necessary to compare the measured antiskid data with the data obtained during the manufacturer's original certification tests for the weight used in the antiskid tests at the highest speed for that weight shown in the Airplane Flight Manual.

(ii) Conduct at least one landing deceleration test at each of the following weights: maximum landing weight, an intermediate landing weight and normal minimum landing weight.[13] All landings should be made from the highest corresponding contact speeds used in determining FAA Approved Airplane Flight Manual field lengths.

(4) Conduct controllability tests in accordance with sections 4b.170 and 4b.171 (except for the emergency braking condition) after the occurrence of any single malfunction within the antiskid system (excluding the device and those components which were determined to be satisfactory based on laboratory tests). Single probable malfunctions, which analysis indicates may be likely to occur, should be simulated during landing or simulated landing deceleration tests. If analysis shows clearly that a particular malfunction would not adversely affect controllability, that malfunction need not be simulated in flight tests.

(5) Conduct taxi tests to demonstrate that repeated rapid full brake pedal application and release does not result in excessive delay in brake reapplications and that ground handling maneuvering characteristics and sensitivity of braking effect are satisfactory.

(6) Conduct tests and analyses to determine the effect of automatic cyclic brake action on the emergency brake system fluid supply. The fluid volume (reserved for emergency use in the reservoir or emergency accumulators of the basic brake system) may be adequate for manual braking but may be adversely affected by an antiskid installation. Hence, an engineering evaluation should be conducted to show that the antiskid system will not have an adverse effect on braking when the airplane is stopped by means of the emergency brake system, or to show that the antiskid system is automatically made inoperative when emergency braking is used.

(7) If, during the tests specified in this paragraph, adjustments or modifications to the antiskid device or its installation proved necessary and indicated the possibility of encountering unreliable operation due to maintenance difficulties or the need for frequent adjustments, then accelerated service functioning and reliability tests should be conducted as deemed necessary.

[13] If it can be shown by the accelerate-stop distance tests conducted and the data obtained in subdivision (i) of this subparagraph that the landing distances when using normal landing braking techniques, would not exceed the landing distances approved without antiskid devices, then the landing distance tests specified in subdivision (ii) of this subparagraph need not be conducted.

(21 F. R. 2558, Apr. 18, 1956, effective May 15, 1956, amended in 23 F. R. 2789, Apr. 26, 1958, effective May 5, 1958.)

4b.338 *Skis.* Skis shall be of an approved type. The maximum limit load rating of each ski shall not be less than the maximum limit load determined in accordance with the applicable ground load requirements of this part. (See secs. 4b.230 through 4b.236.)

Hulls and Floats

4b.340 *General.* The requirements of sections 4b.341 and 4b.342 shall apply to the design of hulls and floats.

4b.341 *Seaplane main floats.* Seaplane main floats shall be of an approved type and shall comply with the provisions of section 4b.250. In addition, the following shall apply.

(a) *Buoyancy.* Each seaplane main float shall have a buoyancy of 80 percent in excess of that required to support the maximum weight of the seaplane in fresh water.

(b) *Compartmentation.* Each seaplane main float shall contain not less than 5 watertight compartments. The compartments shall have approximately equal volumes.

4b.342 *Boat hulls.*

(a) The hulls of boat seaplanes and amphibians shall be divided into watertight compartments so that, with any two adjacent compartments flooded, the buoyancy of the hull and auxiliary floats (and wheel tires, if used) will provide a sufficient margin of positive stability to minimize capsizing in rough fresh water.

(b) For the purpose of communication between compartments, bulkheads with watertight doors shall be allowed.

Personnel and Cargo Accommodations

4b.350 *Pilot compartment; general.* All references to flight crew in this section and sections 4b.351 through 4b.353 shall mean the

minimum flight crew established in accordance with section 4b.720.

(a) The arrangement of the pilot compartment and its appurtenances shall provide safety and assurance that the flight crew will be able to perform all of their duties and operate the controls in the correct manner without unreasonable concentration and fatigue.

(b) The primary flight controls listed on figure 4b–16, excluding cables and control rods, shall be so located with respect to the propellers that no portion of the flight crew or the controls lies in the region between the plane of rotation of any inboard propeller and the surface generated by a line passing through the center of the propeller hub and making an angle of 5° forward or aft of the plane of rotation of the propeller.

(c) When provision is made for a second pilot, the airplane shall be controllable with equal safety from both seats.

(d) The pilot compartment shall be constructed to prevent leakage likely to be distracting to the crew or harmful to the structure when flying in rain or snow.

(e) A door shall be provided between the pilot compartment and the passenger compartment.

(f) The door prescribed in paragraph (e) of this section shall be equipped with a locking means to prevent passengers from opening the door without the pilot's permission.

(g) Vibration and noise characteristics of cockpit appurtenances shall not interfere with the safe operation of the airplane.

4b.350–1 *Noise and vibration characteristics (FAA policies which apply to sec. 4b.350 (g)).* Noise and vibration characteristics should be observed throughout the flight test program. If possible, noise levels should be measured and recorded in decibels.

(19 F. R. 4463, July 20, 1954, effective Sept. 1, 1954.)

4b.351 *Pilot compartment vision.*

(a) *Nonprecipitation conditions.*

(1) The pilot compartment shall be arranged to afford the pilots a sufficiently extensive, clear, and undistorted view to perform safely all maneuvers within the operating limitations of the airplane, including taxying, take-off, approach, and landing.

(2) It shall be demonstrated by day and night flight tests that the pilot compartment is free of glare and reflections which would tend to interfere with the flight crew's normal duties.

(b) *Precipitation conditions.*

(1) Means shall be provided for maintaining a sufficient portion of the windshield clear so that both pilots are afforded a sufficiently extensive view along the flight path in all normal flight attitudes of the airplane. Such means shall be designed to function under the following conditions without continuous attention on the part of the crew:

(i) In heavy rain at speeds up to 1.6 V_{s_1}, flaps retracted,

(ii) In the most severe icing conditions for which approval of the airplane is desired.

(2) In addition to the means prescribed in subparagraph (1) of this paragraph at least the first pilot shall be provided with a window which, when the cabin is not pressurized, is openable under the conditions prescribed in subparagraph (1) of this paragraph, and which provides the view specified in that subparagraph. The design shall be such that when the window is opened sufficient protection from the elements will be provided against the impairment of the pilot's vision.

4b.351–1 *Procedure for demonstrating pilot compartment visibility (FAA policies which apply to sec. 4b.351).*

(a) *Nonprecipitation conditions.* Such tests as are deemed necessary to show compliance with section 4b.351 (a) should be conducted.

(b) *Precipitation conditions, section 4b.351 (b).*

(1) The operation of the windshield wiper should be checked in actual or simulated precipitation conditions in order to demonstrate that adequate vision is provided for takeoff and landing at speeds up to 1.6 V_{s_1}.

(2) The windshield de-icing system should be checked for distribution and operation.

(19 F. R. 4463, July 20, 1954, effective Sept. 1, 1954.)

4b.351–2 *Vision with reverse thrust (FAA policies which apply to sec. 4b.351).* The policies outlined in section 4b.402–1 (g) and (h) will apply.

(20 F. R. 2279, Apr. 8, 1955, effective Apr. 30, 1955.)

4b.351–3 *Minimum area of visibility in the flight crew compartment (FAA policies which*

apply to sec. 4b.351 (a)). The area of visibility established in this section for the pilot, and an equivalent area for the copilot, should be the minimum for showing compliance with the visibility provisions of section 4b.351 (a).

(a) *Reference eye position.* A single point established in accordance with the provisions of this paragraph constitutes the reference eye position (i. e., a point midway between the two eyes) from which the central axis may be located. The reference eye position is located 5 inches aft of the rearmost extremity of the elevator control device when the control is in its most rearward position (i. e., against the up elevator control stops), see figure 6, and 30.5 inches ±.5 inch above the point of maximum depression of the seat cushion with:

(1) The pilot seat in a normal operating position from which all controls can be utilized to their full travel, by an average subject, and which will provide for vertical adjustment of the seat of not less than 2½ inches above and 2½ inches below this initial vertical position.

(2) The seat back in its most upright position.

(3) The seat cushion depression being that caused by a subject weighing 170 to 200 pounds.

(4) The longitudinal axis of the airplane level.

(5) The point established not beyond one inch to the left or right of the longitudinal center line of the pilot's seat. *(See fig. 6.)*

(6) All measurements made from a single point established in accordance with this paragraph.

(b) *Clear areas of vision.*

(1) With the reference eye position located as indicated in paragraph (a), and utilizing binocular vision and azimuthal movement of the head and eyes about a radius, the center of which is 3$\frac{5}{16}$ inches behind the reference eye position (this point to be known as the central axis), the pilot should have the following clear areas of vision measured from the appropriate eye position with the aircraft's longitudinal axis level. The areas defined are based on the cardinal points of reference listed below and indicated in figure 7. A dual lens camera as photo recorder should be used in measuring the angles specified in this paragraph. Other methods, including the use of a goniometer, are acceptable if they produce equivalent areas to those obtained with the dual lens camera. When not using a dual lens camera compensation should be made for one-half the distance which exists between the eyes, or 1¼ inches as indicated in figure 9.

(i) 20° forward and up from the horizon between 20° left and 10° right allowed to diminish to 15° up at 30° right (this area unbroken).

(ii) 15° forward and down from the horizon between 20° left and 10° right allowed to diminish to 10° down at 30° right (this area unbroken).

(iii) 40° above horizon between 85° and 95° left.

(iv) 30° below horizon between 85° and 95° left.

(v) 20° up and 15° down from horizon at 135° left.

(2) There should be no obstruction to vision in the area indicated in subdivisions (i) and (ii) of this paragraph and in figure 7. Beyond 20° left the angles indicated in subdivisions (i) and (ii) should remain constant, or increase progressively until they reach the reference angles in subdivisions (iii) and (iv) at 85° and should not be less than indicated in these subdivisions up to the 95° position, at which time they may diminish gradually to the angles shown in subdivision (v) of this paragraph, and should be governed by the limitations of paragraph (d) (2). The area beyond 135°, if any, should be as large as possible since the human eye does not present any limitation when the use of perceptive rather than binocular vision is the criterion.

(3) It is possible that in the symmetrical type pilot compartment, there may be an area about the center line of the windshield where the requirements governing pilot and copilot vision areas do not overlap. In this area the angles above and below eye level may diminish due to the increased distance between the appropriate eye position and the windshield, but the windshield dimensions established at the 30° right position, above and below the horizontal plane of the pilot's eye, should be retained. This area should also be governed by the limitations of paragraph (d) (1) and (2) of this

section. No attempt is made to define the angles of vision for the pilot, to the right of 30°, since it is assumed that the required vision for the copilot will govern this area. This area not defined by exact limits is indicated by shading in figure 7.

(c) *Optical properties of windshield.* The windshield should exhibit equivalent optical properties to those covered in MIL–G–8602, dated June 29, 1953, for flat panels, and MIL–G–7767, dated August 14, 1951, for curved panels or any applicable military specifications which may be published subsequent to these specifications. In addition, the optical properties of the windshield should not deteriorate under pressurization loads.

(d) *Impairments to vision.*

(1) Any windshield post should not exceed 2.5 inches total obstruction in projected width on the pilot's eyes when located within a sector of 20° and 60° of azimuth to the left of the pilot's forward vision, when measured with head rotated so that the eyes are perpendicular to a vertical plane passing through the center line of the projected width as indicated in figure 8.

(2) The location of instruments, equipment, or structure should not impair any of the areas of vision established in this section. In addition, cockpit equipment should not obstruct a line of vision from a point two inches above the reference eye position to any point along the upper limit of the forward windshield panels, and similarly, a line of vision from a point two inches below the reference eye position to the lower limit of the forward windshield panels.

(22 F. R. 7359, Sept. 14, 1957, effective Sept. 20, 1957.)

4b.352 *Windshield and windows.*

(a) All internal glass panes shall be of a nonsplintering safety type.

(b) The windshield panes which the pilots will be directly behind in the normal conduct of their duties and the supporting structures for such panes shall have sufficient strength to withstand without penetration the impact of a four-pound bird when the velocity of the airplane relative to the bird along the airplane's flight path is equal to the value of V_C at sea level selected in accordance with section 4b.210 (b) (4).

(c) Means shall be provided to minimize the danger to the pilots from flying windshield fragments due to bird impact unless it can be shown by analysis or test that the probability of occurrence of a critical fragmentation condition is of a low order. The provisions of this paragraph are intended to apply to all transparent panes in the cockpit section which appear in the front view of the aircraft, are inclined 15 degrees or more to the longitudinal axis of the aircraft, and have any portion located so that fragmentation thereof will constitute a hazard to the pilots.

(d) The design of windshields and windows in pressurized airplanes shall be based on factors peculiar to high altitude operation. (See also sec. 4b.373.)

NOTE: Factors peculiar to high altitude operation as they may affect the design of windshields and windows include the effects of continuous and cyclic pressurization loadings, the inherent characteristics of the material used, the effects of temperatures and temperature differentials, etc.

4b.353 *Controls.*

(a) All cockpit controls shall be located to provide convenience in operation and in a manner tending to prevent confusion and inadvertent operation. (See also sec. 4b.737.)

(b) The direction of movement of controls shall be according to figures 4b–16 and 4b–17. Wherever practicable the sense of motion involved in the operation of other controls shall correspond with the sense of the effect of the operation upon the airplane or upon the part operated. All controls of a variable nature employing a rotary motion shall move clockwise from the off position, through an increasing range, to the full on position.

Controls	Movement and actuation
PRIMARY	
Aileron	Right (clockwise) for right wing down.
Elevator	Rearward for nose up.
Rudder	Right pedal forward for nose right.
SECONDARY	
Flaps (or auxiliary lift devices).	Forward for flaps up; rearward for flaps down.
Trim tabs (or equivalent).	Rotate to produce similar rotation of the airplane about an axis parallel to the axis of the control.

Figure 4b–16.—Aerodynamic controls.

Controls	Movement and actuation
Powerplant	
Throttles	Forward to increase forward thrust and rearward to increase rearward thrust.
Propellers	Forward to increase rpm.
Mixture	Forward or upward for rich.
Carburetor air heat	Forward or upward for cold.
Supercharger	Forward or upward for low blower. In the case of turbosuperchargers, forward, upward, or clockwise to increase pressure.
Auxiliary	
Landing gear	Down to extend.

Figure 4b–17.—Powerplant and auxiliary controls.

(c) The controls shall be so located and arranged with respect to the pilots' seats that there exists full and unrestricted movement of each control without interference from either the cockpit structure or the flight crew's clothing when seated with the seat belt fastened. This shall be demonstrated for individuals ranging from 5′ 2″ to 6′ 0″ in height.

(d) Identical powerplant controls for each engine shall be located to prevent any misleading impression as to the engine to which they relate.

(e) The wing flap (or auxiliary lift device) and landing gear controls shall comply with the following:

(1) The wing flap control shall be located on top of the pedestal aft of the throttle(s), centrally or to the right of the pedestal centerline and shall be not less than 10 inches aft of the landing gear control.

(2) The landing gear control shall be located forward of the throttles and shall be operable by each of the pilots when seated with seat belts fastened.

(f) The control knobs shall be shaped in accordance with figure 4b–22, and such knobs shall be of the same color, but of a color in contrast with that of not only the other control knobs but also the surrounding cockpit.

NOTE: Figure 4b–22 is not intended to indicate the exact size or proportion of the control knobs.

(g) Where the work load on the flight crew is such as to require a flight engineer (see sec. 4b.720), a flight engineer station shall be provided. The station shall be so located and arranged that the flight crew members can perform their functions efficiently and without interfering with each other.

4b.353–1 *Control tests (FAA policies which apply to sec. 4b.353).* Such tests as are deemed necessary to show compliance with the control movements and locations specified in section 4b.353 should be conducted.

(19 F. R. 4464, July 20, 1954, effective Sept. 1, 1954.)

4b.354 *Instrument arrangement.* (See sec. 4b.611.)

4b.355 *Instrument marking.* (The operational markings, instructions, and placards required for the instruments, controls, etc., are specified in secs. 4b.730 through 4b.738.)

4b.356 *Doors.*

(a) Airplane cabins shall be provided with at least one easily accessible external door.

(b) Means shall be provided for locking each external door and for safeguarding against opening in flight either inadvertently by persons or as a result of mechanical failure. It shall be possible to open external doors from either the inside or the outside even though persons may be crowding against the door from the inside. (Note: It is not the intent to prohibit the use of inward opening doors if sufficient measures are provided to prevent occupants from crowding against the door to an extent which would interfere with the opening of the door.) The means of opening shall be simple and obvious and shall be so arranged and marked that it can be readily located and operated even in darkness.

(c) Reasonable provisions shall be made to prevent the jamming of any external door as a result of fuselage deformation in a minor crash.

(d) External doors shall be so located that persons using them will not be endangered by the propellers when appropriate operating procedures are employed.

(e) Means shall be provided for a direct visual inspection of the locking mechanism by crew members to ascertain whether all external doors for which the initial opening movement is outward, including passenger, crew, service, and cargo doors, are fully locked (see also sec.

4b.362 (e) (5) for emergency exits). In addition, visual means shall be provided to signal to appropriate crew members that all normally used external doors are closed and in the fully locked position.

4b.356–1 *External doors (FAA policies which apply to sec. 4b.356).* The provisions of section 4b.356 should be applied to all cabin and crew compartment external doors usable for entrance or egress. It is not restricted to the main cabin door. Cargo and service doors not suitable for emergency egress need only comply with section 4b.356 (e) and safeguarding against opening in flight as a result of mechanical failure.

(20 F.R. 2279, Apr. 8, 1955, effective Apr. 30, 1955.)

4b.356–2 *Auxiliary latching devices (FAA policies which apply to sec. 4b.356 (b)).*

(a) The use of auxiliary latching devices is permitted. Such devices would include dual locking handles, other types of locking and safetying devices, and two position handles, and where one operation such as pushing or pulling on the handle unlocks the latching mechanism and the second operation of turning the handle unlatches the door for opening. Auxiliary safetying devices should be used only as an additional safety factor and should not be used as a means of correcting an inadequate design of the primary locking or latching means. The advantages to be gained from the installation of auxiliary or dual safety devices (safety chains and dual handle main locking means) should be weighed against the need to easily and rapidly open the door in case of emergencies so that the overall level of safety is as high as practicable.

(b) All locking or safety means, including safety chains and latches of any kind, should be so positioned and designed that their presence, location and means of operation are obvious to one not familiar with door designs.

(1) The means of fastening safety devices should be sufficiently simple to make removal easy.

(2) Any emergency release mechanism installed to release the safety device should operate with a simple motion and upon the application of relatively small forces.

(3) All locking devices should be readily operable from both inside and outside of the airplane and be appropriately marked both inside and outside.

(c) Auxiliary safety devices meeting the standards of (b) may be fastened in place during the entire flight. It will not be necessary to have such devices unlatched during takeoff and landing. Auxiliary safety devices such as safety chains or bars that do not meet the standards of paragraph (b) of this section may be used provided operating instructions are installed at or near the device and a placard is installed requiring the removal of such devices prior to takeoff and landing.

(20 F.R. 2279, Apr. 8, 1955, effective Apr. 30, 1955.)

4b.356–3 *Power operated external doors (FAA policies which apply to sec. 4b.356 (b)).* Power operated doors should be so designed that the door can be opened by manual means even when power is inactivated. The loss of power should not cause the door to become unlatched.[14]

(20 F. R. 2279, Apr. 8, 1955, effective Apr. 30, 1955.)

4b.356–4 *Means for safeguarding against inadvertent opening in flight (FAA policies which apply to sec. 4b.356 (b)).* Auxiliary latching devices may be used to reduce the probability of inadvertent opening in flight provided they meet the standards and conditions covered in section 4b.356–2.

(a) It is acceptable to create a limited access zone in front of the door to eliminate the possibility of a passenger using the door handle as a steadying means and thereby inadvertently opening the door. Although providing a restricted zone by means of a barrier may appear to conflict with the requirements of section 4b.362 (g) for an unobstructed passageway to Type I and II emergency exits, it is considered that it would contribute sufficiently to the overall safety of the aircraft occupants to be permitted. This device may be a rope, chain, rigid bar or gate. Such installations should be waist high to provide the maximum benefits for an adult and the end fastenings should be

[14] Since emergency landings, such as the wheels-up condition, may reasonably result in the severance of electrical wires or rupture of hydraulic and pneumatic lines, the power which may be needed for operation of the doors or exits may be lost. Similarly, it is conceivable that under emergency conditions, the electrical power source may be purposely interrupted to reduce the possibility of fire.

simple to make removal easy. It is not considered acceptable to install full-length auxiliary doors, but waist-high rigid gates would be acceptable provided they open toward the door and will not block the opening of the cabin door in any way. The locking means should be one which could be easily overridden such as a spring-loaded ball type latch.

(b) Flexible gates such as those made from webbing are not acceptable on the basis that persons may become entangled during an emergency egress. The use of a barrier to prevent persons from inadvertently opening the door in flight does not eliminate the need for a safety means to provide for possible malfunctioning of the primary locking mechanism; however, the auxiliary safetying means of section 4b.356–2 may eliminate the need for a restricted zone.

(20 F. R. 2279, Apr. 8, 1955, effective Apr. 30, 1955.)

4b.356–5 *Direct visual inspection (FAA policies which apply to sec. 4b.356 (e)).* The means of complying with section 4b.356 (e) will depend upon the type of door and locking mechanism used. It should be determined in all cases that means are provided to ascertain that an unsatisfactory condition does not exist after closing the door. In some instances a central window for viewing the position of the mechanism may be sufficient while other cases may require one or more windows in the door frame to permit inspection of the bayonet location relative to that portion of the lock in the door frame. The need for and/or the number and location of inspection openings or windows will depend on the type of door and locking mechanism used.

(20 F. R. 2279, Apr. 8, 1955, effective Apr. 30, 1955.)

4b.356–6 *Visual indicating system (FAA policies which apply to sec. 4b.356 (e)).*[15]

(a) The visual indicating system may consist of an indicator for each individual door, or a system connecting all doors in series. If the latter system is used, it need not necessarily show which door is not fully locked.

(b) It is not necessary that more than one crew member be able to ascertain by a visual signal that all external doors, normally used by the crew in supplying the airplane, or in loading and unloading passengers and cargo, are fully closed and locked. The visual signal should be located so that it may easily be seen by the appropriate crew member from his station.

(20 F. R. 2279, Apr. 8, 1955, effective Apr. 30, 1955.)

4b.357 *Door louvres.* Where internal doors are equipped with louvres or other ventilating means, provision convenient to the crew shall be made for stopping the flow of air through the door when such action is found necessary.

4b.358 *Seats, berths, and safety belts.*

(a) *General.* At all stations designated as occupiable during take-off and landing, the seats, berths, belts, harnesses, and adjacent parts of the airplane shall be such that a person making proper use of these facilities will not suffer serious injury in the emergency landing conditions as a result of inertia forces specified in section 4b.260. Seats and berths shall be of an approved type (see also sec. 4b.643 concerning safety belts).

(b) *Arrangement.*

(1) Passengers and crew shall be afforded protection from head injuries by one of the following means:

(i) Safety belt and shoulder harness which will prevent the head from contacting any injurious object,

(ii) Safety belt and the elimination of all injurious objects within striking radius of the head,

(iii) Safety belt and a cushioned rest which will support the arms, shoulders, head, and spine.

(2) For arrangements which do not provide a firm hand hold on seat backs, hand grips or rails shall be provided along aisles to enable passengers or crew members to steady themselves while using the aisles in moderately rough air.

(3) All projecting objects which would cause injury to persons seated or moving about the airplane in normal flight shall be padded.

(4) Berths shall be so designed that the forward portion is provided with a padded end board, a canvas diaphragm, or other equivalent means, capable of withstanding the static load reaction of the occupant when subjected to the

[15] The objective herein is to be able to ascertain by visual means that the door and/or locking means is sufficiently engaged to eliminate hazards emanating from an improperly closed door. Outward opening doors present a different problem from inward opening doors.

forward inertia force specified in section 4b.260. Berths shall be free from corners and protuberances likely to cause serious injury to a person occupying the berth during emergency conditions.

(5) Seats for all crew members at flight deck stations shall incorporate provisions for the use of a shoulder harness and the seats with such provisions shall comply with the strength requirements of paragraph (c) of this section.

(6) Seats for cabin attendants shall be disposed within the passenger compartment near approved floor level emergency exits. (See sec. 4b.362 (g).)

(c) *Strength.* All seats and berths and their supporting structure shall be designed for occupant weight of 170 pounds with due account taken of the maximum load factors; inertia forces, and reactions between occupant, seat, and safety belt or harness corresponding with all relevant flight and ground load conditions, including the emergency landing conditions prescribed in section 4b.260. In the case of berths, the forward inertia force shall be considered in accordance with paragraph (b) (4) of this section and need not be considered with respect to the safety belt. In addition, the following shall apply.

(1) Pilot seats shall be designed for the reactions resulting from the application of pilot forces to the flight controls as prescribed in section 4b.224.

(2) In determining the strength of the seat or berth attachments to the structure, and the safety belt or shoulder harness attachments to the seat, berth, or structure, the inertia forces specified in section 4b.260 (a) shall be multiplied by a factor of 1.33.

4b.358–1 *Application of loads (FAA policies which apply to sec. 4b.358).* The actual forces acting on seats, berths, and supporting structure in the various flight, ground and emergency landing conditions will consist of many possible combinations of forward, sideward, downward, upward, and aft loads. However, in order to simplify the structural analysis and testing of these structures, it will be permissible to assume that the critical load in each of these directions, as determined from the prescribed flight, ground, and emergency landing conditions, acts separately. If the applicant desires, selected combinations of loads may be used, provided the required strength in all specified directions is substantiated. (TSO C–25, Aircraft Seats and Berths, outlines acceptable methods for testing seats and berths.)

4b.359 *Cargo and baggage compartments.* (See also secs. 4b.382 to 4b.384.)

(a) Each cargo and baggage compartment shall be designed for the placarded maximum weight of contents and the critical load distributions at the appropriate maximum load factors corresponding with all specified flight and ground load conditions, excluding the emergency landing conditions of section 4b.260.

(b) Provisions shall be made to prevent the contents in the compartments from becoming a hazard by shifting under the loads specified in paragraph (a) of this section.

(c) Provisions shall be made to protect the passengers and crew from injury by the contents of any compartment, taking into account the emergency landing conditions of section 4b.260.

Emergency Provisions

4b.360 *General.* The requirements of sections 4b.361 and 4b.362 shall apply to the emergency provisions.

4b.361 *Ditching.* Compliance with this section is optional. The requirements of this section are intended to safeguard the occupants in the event of an emergency landing during overwater flight. When compliance is shown with the provisions of paragraphs (a) through (c) of this section and with the provisions of sections 4b.362 (d), 4b.645, and 4b.646, the type certificate shall include certification to that effect. When an airplane is certificated to include ditching provisions, the recommended ditching procedures established on the basis of these requirements shall be set forth in the Airplane Flight Manual (see sec. 4b.742 (d)).

(a) All practicable design measures compatible with the general characteristics of the type airplane shall be taken to minimize the chance of any behavior of the airplane in an emergency landing on water which would be likely to cause immediate injury to the occupants or to make it impossible for them to escape from the airplane. The probable behavior of the airplane in a water landing shall be investigated by

542115 O—60——9

model tests or by comparison with airplanes of similar configuration for which the ditching characteristics are known. In this investigation account shall be taken of scoops, flaps, projections, and all other factors likely to affect the hydrodynamic characteristics of the actual airplane.

(b) It shall be shown that under reasonably probable water conditions the flotation time and trim of the airplane will permit all occupants to leave the airplane and to occupy the life rafts required by section 4b.645. If compliance with this provision is shown by buoyancy and trim computations, appropriate allowances shall be made for probable structural damage and leakage.

NOTE: In the case of fuel tanks which are equipped with fuel jettisoning provisions and which can be reasonably expected to withstand a ditching without leakage, the jettisonable volume of fuel may be considered as buoyancy volume.

(c) External doors and windows shall be designed to withstand the probable maximum local pressures, unless the effects of the collapse of such parts are taken into account in the investigation of the probable behavior of the airplane in a water landing as prescribed in paragraphs (a) and (b) of this section.

4b.362 *Emergency evacuation.* Crew and passenger areas shall be provided with emergency evacuation means to permit rapid egress in the event of crash landings, whether with the landing gear extended or retracted, taking into account the possibility of the airplane being on fire. If the airplane is divided into separate compartments arranged so that the minimum unobstructed passageway between such compartments is not available as required by paragraph (g) of this section, requirements of this section shall be applied to each compartment independently. Passenger and crew entrances and service doors shall be considered as emergency exits if they meet the applicable requirements of this section.

(a) *Flight crew emergency exits.* Flight crew emergency exits shall be located in the flight crew area, one on each side of the airplane, or, alternatively, a top hatch shall be provided. Such exits shall be of sufficient size and shall be so located as to permit rapid evacuation by the crew. Such exits shall not be required in airplanes having a passenger capacity of 20 or less if the Administrator finds that the proximity of passenger emergency exits to the flight crew area offers a convenient and readily accessible means of evacuation for the flight crew.

(b) *Passenger emergency exits; type and location.* All required exits shall be in such specific locations as will afford the most effective means of passenger evacuation. The type of exits and their general location shall be as follows:

(1) Type I: A rectangular opening of not less than 24 inches wide by 48 inches high, with corner radii not greater than ⅓ the width of the exit. The first Type I exit on each side of the fuselage shall be located on the aft portion of the passenger compartment unless the configuration of the airplane is such that some other location would afford a more effective means of passenger evacuation. All Type I exits shall be floor level exits.

(2) Type II: A rectangular opening of not less than 20 inches wide by 44 inches high, with corner radii not greater than ⅓ the width of the exit. Unless Type I exits are required, one Type II exit on each side of the fuselage shall be located in the aft portion of the passenger compartment except where the configuration of the airplane is such that some other location would afford a more effective means of passenger evacuation. Type II exits shall be floor level exits unless located over the wing in which case they shall have a step-up inside the airplane of not more than 10 inches and a step-down outside the airplane of not more than 17 inches.

(3) Type III: A rectangular opening of not less than 20 inches wide by 36 inches high, with corner radii not greater than ⅓ the width of the exit, located over the wing with a step-up inside the airplane of not more than 20 inches and a step-down outside the airplane of not more than 27 inches.

(4) Type IV: A rectangular opening of not less than 19 inches wide by 26 inches high, with corner radii not greater than ⅓ the width of the exit, located over the wing with a step-up inside the airplane of not more than 29 inches and a step-down outside the airplane of not more than 36 inches.

NOTE: Larger openings than those specified in paragraph (b) of this section shall be acceptable, whether or not of rectangular shape, provided that the specified rectangular openings can be inscribed therein, and provided further that the base of the inscribed rectangular opening meets the specified step-up and step-down heights.

(c) *Passenger emergency exits; number required.* Emergency exits of the type and location prescribed in paragraph (b) of this section shall be accessible to the passengers and shall be provided in accordance with subparagraphs (1) through (5) of this paragraph.

(1) The relation between the passenger seating capacity and the type and number of exits provided on each side of the airplane shall be as follows:

Passenger seating capacity	Emergency exits required on each side of the fuselage			
	Type I	Type II	Type III	Type IV
1 to 10 inclusive	------	------	------	1
11 to 19 inclusive	------	------	1	------
20 to 39 inclusive	------	1	------	1
40 to 59 inclusive	1	------	------	1
60 to 79 inclusive	1	------	1	------
80 to 109 inclusive	1	------	1	1
110 to 139 inclusive	2	------	1	------
140 to 179 inclusive	2	------	2	------
180 to 219 inclusive	2	2	------	------

NOTE: Although similar exits and their locations are prescribed for each side of the fuselage, it is not the intent of this regulation to require that the exits necessarily be at locations diametrically opposite each other.

(2) Additional exits shall be provided on airplanes having 220 or more passengers. The additional exits shall provide an effective means of passenger evacuation consistent with the minima provided in the table in subparagraph (1) of this paragraph.

(3) In applying subparagraph (1) of this paragraph, it shall be acceptable to install 2 Type IV exits in lieu of each required Type III exit.

(4) If the Administrator finds that there exist compensating factors in the emergency evacuation means provided, it shall be permissible to increase the passenger seating capacity beyond that shown in subparagraph (1) of this paragraph, except that such increase in seating capacity shall in no case exceed 10 passengers.

(5) On airplanes where the vertical location of the wing does not permit the installation of over-wing exits, an exit the dimensions of which are not less than those prescribed in paragraph (b) (3) of this section shall be installed for each Type III and each Type IV exit required by subparagraph (1) of this paragraph.

(d) *Ditching emergency exits.* Except as otherwise provided in this paragraph, at least 2 exits, one on each side of the airplane, meeting the minimum dimensions of the exits specified in paragraph (b) (3) of this section and located above the water level, shall be provided. On airplanes with a passenger seating capacity of 10 or less, the minimum dimensions of the exit specified in paragraph (b)(4) of this section shall be acceptable. In addition, it shall be shown that there is not less than one emergency exit located above the water level for every 35 passengers. It shall be permissible to substitute 2 type IV exits for each required type III exit. When the configuration of the airplane is such that it will not permit the location of side exits above the water level, the required number of side exits shall be replaced by an equal number of overhead hatches of not less than the dimensions of exits specified in paragraph (b) (3) of this section, except that on airplanes having a passenger capacity of 35 or less only one such overhead hatch need be provided.

(e) *Emergency exit arrangement.*

(1) Emergency exits shall consist of movable doors or hatches in the external walls of the fuselage and shall provide an unobstructed opening to the outside.

(2) All emergency exits shall be openable from the inside and from the outside except that sliding window emergency exits in the flight crew area need not be openable from the outside if the Administrator finds that the proximity of other approved exits makes them convenient and readily accessible to the flight crew area.

(3) The means of opening emergency exits shall be simple and obvious and shall not require exceptional effort of a person opening them.

(4) Means shall be provided for locking each emergency exit and for safeguarding against opening in flight either inadvertently by persons or as a result of mechanical failure.

(5) Means shall be provided for a direct visual inspection of the locking mechanism by crew members to ascertain whether all emergency exits for which the initial opening movement is outward are fully locked.

(6) Provision shall be made to minimize the possibility of jamming of emergency exits as a result of fuselage deformation in a minor crash landing.

(7) For all landplane emergency exits other than exits located over the wing which are more than 6 feet from the ground with the airplane on the ground and the landing gear extended, approved means shall be provided to assist the occupants in descending to the ground.

(8) The proper functioning of emergency exit installations shall be demonstrated by test.

(f) *Emergency exit marking.*

(1) All passenger emergency exits, their means of access, and their means of opening shall be marked conspicuously. The identity and location of emergency exits shall be recognizable from a distance equal to the width of the cabin. The location of the emergency exit operating handle and the instructions for opening shall be marked on or adjacent to the emergency exit and shall be readable from a distance of 30 inches.

(2) A source or sources of light, with an energy supply independent of the main lighting system, shall be installed to illuminate all passenger emergency exit markings. Such lights shall be designed to function automatically in a crash landing and shall also be operable manually.

(3) All emergency exits which are required to be openable from the outside, and their means of opening shall be marked on the outside of the airplane for guidance of rescue personnel.

(g) *Emergency exit access.* Passageways between individual compartments of the passenger area and passageways leading to Type I and Type II emergency exits (see paragraph (b) of this section) shall be unobstructed and shall be not less than 20 inches wide. Adjacent to emergency exits where assisting means are required by paragraph (e) (7) of this section, there shall be sufficient additional space to allow a crew member to assist in the evacuation of passengers without reduction in the unobstructed width of the passageway to such exit.

Access shall be provided from the main aisle to all Type III and Type IV exits and such access shall not be obstructed by seats, berths, or other protrusions to an extent which would reduce the effectiveness of the exit, except that minor obstructions shall be permissible if the Administrator finds that compensating factors are present to maintain the effectiveness of the exit. If it is necessary to pass through a doorway to reach any required emergency exit from any seat in the passenger cabin, the door shall be provided with a means to latch it in the open position. A suitable placard stating that the door is to be latched in the open position during takeoff and landing shall be installed.

(h) *Width of main aisle.* The main passenger aisle at any point between seats shall not be less than 15 inches wide up to a height above the floor of 25 inches and not less than 20 inches wide above that height.

For airplanes having a maximum passenger seating capacity of 19 or less, these aisle widths shall not be less than 12 inches wide up to a height above the floor of 25 inches and not less than 20 inches above that height.

4b.362–1 *Flight crew emergency exits (FAA policies which apply to sec. 4b.362 (a)).*

(a) A flight crew area emergency exit should be a minimum of 19 by 20 inches unobstructed rectangular opening; however, other size and shape minimums will also be acceptable providing a demonstration of exit utility, using typical flight crew personnel, is satisfactorily demonstrated to the Administrator.

(b) The provisions of section 4b.362 (e) (2) through (8) and 4b.362 (f) are also applicable to flight crew emergency exits. When the internal exit "opening means" involves sequence operations, operation of two handles or latches, release of safety catches, etc., such means will be acceptable for flight crew exits when it can be reasonably established that the means will

be "simple and obvious" to crew members trained in their use.

(23 F. R. 2789, Apr. 26, 1958, effective May 5, 1958.)

4b.362–2 *Step-down distance (FAA interpretations which apply to sec. 4b.362 (b)).* The step-down distances specified in section 4b.362 (b) (2), (3), and (4) mean the actual distances between the bottom of the required openings and a usable foothold which extends out from the fuselage and is large enough to be effective without searching visually or by feel.

(23 F. R. 2789, Apr. 26, 1958, effective May 5, 1958.)

4b.362–3 *Number of passengers (FAA policies which apply to sec. 4b.362 (c)).*

(a) Cabin attendants are considered part of the crew and are not included in the passenger seating capacity (section 4b.362 (c) (1)).

(b) The following compensatory factor in emergency evacuation means will be acceptable for an increase in the passenger seating capacity beyond the limits specified in section 4b.362 (c) (1).

(1) The installation of an approved inflatable slide at each floor level exit, other than over the wing exits, is acceptable for,

(i) an increase of no more than 5 passengers on airplanes having at least 2 such exits; or

(ii) an increase of no more than 10 passengers on airplanes having at least 4 such exits.

(23 F. R. 2789, Apr. 26, 1958, effective May 5, 1958.)

4b.362–4 *Emergency exit design descent means*[15a] *(FAA policies which apply to sec. 4b.362 (e) (7)).*

(a) The assist device required for crew exits may be a rope or any other device demonstrated to be suitable for the purpose. If a rope is provided, it should be attached to the fuselage structure at or above the upper limit of the exit opening. The rope and attachment should be capable of withstanding a 400-pound static load.

(b) When required by section 4b.362 (e) (7) at floor level passenger exits, the approved means may be an inflatable slide, a noninflatable slide, or any other device approved by FAA as suitable for the purpose. Ropes or ladders will not be approved as descent means for use at floor level passenger exits.

(23 F. R. 2789, Apr. 26, 1958, effective May 5, 1958.)

4b.362–5 *Emergency exit marking (FAA policies which apply to sec. 4b.362 (f)).*

(a) Exits in excess of the number required by the table in section 4b.362 (c) (1), need not be marked as emergency exits, but if so marked, such exits must meet all requirements of section 4b.362 for the particular type.

(b) Emergency exits used solely for emergency evacuation of the aircraft should be marked "Emergency Exit." Emergency exits customarily used in entering or leaving the airplane need only be marked with the word "Exit." In either case, the marking should be in red or in another color which provides adequate contrast where red might be ineffective against the cabin color scheme.

(c) Opening instructions when not on the exit should be immediately beside the exit and no special effort should be required by a person having 20/20 vision to read these instructions. Readability should be evaluated under representative day and emergency night lighting conditions.

(23 F. R. 2790, Apr. 26, 1958, effective May 5, 1958.)

4b.362–6 *Emergency exit access (FAA policies which apply to sec. 4b.362 (g)).*

(a) Attendant seating facilities[15b] should not normally result in any reduction in required aisle widths, passageways between compartments, or the minimum 20-inch passageway leading to Types I and II exits. Attendants seating facilities provided with any acceptable means of clearing the passageway immediately is not considered as being an obstruction to these passageways. An acceptable means of demonstrating compliance would be a spring loaded attendant seat which provides automatic retraction when the seat is vacated. Unless the seat is aft facing,

[15a] Consideration should be given to such factors affecting the utility of Type III and Type IV exits as weight, ease of handling, provision of handholds, stowage space, adequacy of instructions, etc. A side hinged or external opening exit would not be as critical from the weight standpoint as one removed inwardly which must be moved an appreciable distance to clear the exit approach.

[15b] Under such seating arrangements, particular attention should be directed to compliance with section 4b.260 (c) to protect the attendant from incapacitation by aircraft or galley equipment.

the seat should also be equipped with a shoulder harness.

(b) When it is required that there be an area adjacent to an exit to permit a crew member to assist passengers in the use of escape devices, a 12- by 20-inch area with the long dimension parallel to and clear of the required 20-inch exit approach passageway or equivalent facility should be provided. The area should be adequate to permit an attendant to stand erect and to perform needed assist services in the evacuation of passengers.

(c) Projection of the seat backs into the minimum required exit opening may be permitted only if the seat back can be pushed forward or aft to clear the opening with the seat occupied. The force required to push the seat back away from the opening should be as low as practicable and should not exceed a maximum of 35 pounds with the seat unoccupied. The action should not require operation of any mechanical release. A clear opening should permit the required minimum exit shape to be projected inward past the seat bottom and back cushion. Minor protrusion of the seat upholstery is acceptable if it does not interfere with exit removal and if it could be compressed without special effort by the person(s) using the exit.

(d) Armrests, curtains, or other protuberances should not restrict the required minimum opening unless they are removed simultaneously with opening of the exit.

(e) Berth installations, whether or not made up, should not decrease the accessibility and utility of emergency exits.

(23 F. R. 2790, Apr. 26, 1958, effective May 5, 1958.)

4b.362–7 *Width of main aisle (FAA policies which apply to sec. 4b.362 (h)).* In determining compliance with aisle width requirements in an airplane so arranged that passengers face the aisle, the minimum aisle should be considered to begin at a point 12 inches forward of the leading edge of each seat.

(23 F. R. 2790, Apr. 26, 1958, effective May 5, 1958.

Ventilation, Heating, and Pressurization

4b.370 *General.* The requirements of sections 4b.371 through 4b.376 shall apply to the ventilation, heating, and pressurization of the aircraft.

4b.371 *Ventilation.*

(a) All crew compartments shall be ventilated by providing a sufficient amount of fresh air to enable the crew members to perform their duties without undue discomfort or fatigue.

NOTE: An outside air supply of approximately 10 cubic feet per minute is considered a minimum for each crew member.

(b) Ventilating air in crew and passenger compartments shall be free of harmful or hazardous concentrations of gases or vapors.

NOTE: Carbon monoxide concentrations in excess of one part in 20,000 parts of air are considered hazardous. Carbon dioxide in excess of 3 percent by volume (sea level equivalent) is considered hazardous in the case of crew members. Higher concentrations of carbon dioxide may not necessarily be hazardous in crew compartments if appropriate protective breathing equipment is available.

(c) Provision shall be made to insure the conditions prescribed in paragraph (b) of this section in the event of reasonably probable failures or malfunctioning of the ventilating, heating, pressurization, or other systems and equipment. If accumulation of hazardous quantities of smoke in the cockpit area is reasonably probable, smoke evacuation shall be readily accomplished starting with full pressurization and without depressurizing beyond safe limits (see sec. 4b.374 (b)).

NOTE: Examples of acceptable provisions include secondary isolation, integral protective devices, and crew warning and shut-off for equipment the malfunctioning of which could introduce harmful or hazardous quantities of smoke or gases.

(d) Where partitions between compartments are equipped with louvres or other means allowing air to flow between such compartments, provision convenient to the crew shall be made for stopping the flow of air through the louvres or other means when such action is found necessary. (See also sec. 4b.357.)

(e) Means shall be provided to enable the crew to control the temperature and quantity of ventilating air supplied to the crew compartment independently of the temperature and quantity of ventilating air supplied to other compartments.

4b.371–1 *Carbon monoxide detection (FAA policies which apply to sec. 4b.371).* Policies outlined in section 4b.467–1 will apply.

(19 F. R. 4463, July 20, 1954, effective Sept. 1, 1954.)

4b.372 *Heating systems.* Combustion heaters shall be of an approved type and shall comply with the fire protection requirements of section 4b.386. Engine exhaust heaters shall comply with the provisions of section 4b.467 (c) and (d).

4b.372–1 *Combustion heaters equipped with carbon dioxide fire extinguishers (FAA policies which apply to sec. 4b.372).* The policies as outlined in section 4b.484–1 apply.

(19 F. R. 4463, July 20, 1954, effective Sept. 1, 1954.)

4b.373 *Pressurized cabins; general.* The design of pressurized cabins shall comply with the requirements of sections 4b.374 through 4b.376. (See also secs. 4b.216 (c) and 4b.352, and the oxygen requirements of the appropriate operating parts of the Civil Air Regulations.)

4b.374 *Pressure equipment and supply.* (See sec. 4b.477 (c).)

(a) Occupied cabins or compartments of airplanes shall be equipped to provide a cabin pressure altitude of not more than 8,000 feet at the maximum operating altitude of the airplane under normal operating conditions.

(b) Airplanes certificated for operation at altitudes over 25,000 feet shall be capable of maintaining a cabin pressure altitude of not more than 15,000 feet in the event of any reasonably probable failure or malfunction in the pressurization system.

4b.375 *Pressure control.* Pressurized cabins shall be provided with at least the following valves, controls, and indicators for controlling cabin pressure.

(a) Two pressure relief valves, at least one of which is the normal regulating valve, shall be installed to limit automatically the positive pressure differential to a predetermined value at the maximum rate of flow delivered by the pressure source. The combined capacity of the relief valves shall be such that the failure of any one valve would not cause an appreciable rise in the pressure differential. The pressure differential shall be considered positive when the internal pressure is greater than the external.

(b) Two reverse pressure differential relief valves (or equivalent) shall be installed to prevent automatically a negative pressure differential which would damage the structure, except that one such valve shall be considered sufficient if it is of a design which reasonably precludes its malfunctioning.

(c) Means shall be provided by which the pressure differential can be rapidly equalized.

(d) An automatic or manual regulator for controlling the intake and/or exhaust air flow shall be installed so that the required internal pressures and air flow rates can be maintained.

(e) Instruments shall be provided at the pilot or flight engineer station showing the pressure differential, the absolute pressure in the cabin, and the rate of change of the absolute pressure.

(f) Warning indication shall be provided at the pilot or flight engineer station to indicate when the safe or preset limits on pressure differential and on absolute cabin pressure are exceeded.

(g) If the structure is not designed for pressure differentials up to the maximum relief valve setting in combination with landing loads (see sec. 4b.216 (c)), a warning placard shall be placed at the pilot or flight engineer station.

4b.375–1 *Warning indication (FAA policies which apply to sec. 4b.375 (f)).*

(a) *Cabin pressure differential warning.* Because of the protection provided by the required duplication of pressure relief valves, appropriate warning markings on the cabin pressure differential indicator will meet the requirement for a warning indication to the pilot or flight engineer when the safe or preset cabin pressure differential limits are exceeded.

(b) *Cabin absolute pressure warning.* An aural or visual signal in addition to cabin altitude indicating means will meet the requirements for a warning indication to the pilot or flight engineer when the cabin absolute pressure is reduced below that equivalent to 10,000 feet.

(23 F. R. 2790, Apr. 26, 1958, effective May 5, 1958.)

4b.376 *Tests.*

(a) *Strength test.* The complete pressurized cabin, including doors, windows, and all valves, shall be tested as a pressure vessel for the pressure differential specified in section 4b.216 (c) (3).

(b) *Functional tests.* The following functional tests shall be performed.

(1) To simulate the condition of regulator valves closed, the functioning and the capacity shall be tested of the positive and negative pressure differential valves and of the emergency release valve.

(2) All parts of the pressurization system shall be tested to show proper functioning under all possible conditions of pressure, temperature, and moisture up to the maximum altitude selected for certification.

(3) Flight tests shall be conducted to demonstrate the performance of the pressure supply, pressure and flow regulators, indicators, and warning signals in steady and stepped climbs and descents at rates corresponding with the maximum attainable without exceeding the operating limitations of the airplane up to the maximum altitudes elected for certification.

(4) All doors and emergency exits shall be tested to ascertain that they operate properly after being subjected to the flight tests prescribed in subparagraph (3) of this paragraph.

Fire Protection

4b.380 *General.* Compliance shall be shown with the fire protection requirements of sections 4b.381 through 4b.386. (See also secs. 4b.480 through 4b.490.) In addition, the following shall apply.

(a) *Hand fire extinguishers.* Hand fire extinguishers shall be of an approved type. The types and quantities of extinguishing agents shall be appropriate for the types of fires likely to occur in the compartments where the extinguishers are intended for use. Extinguishers intended for use in personnel compartments shall be such as to minimize the hazard of toxic gas concentrations.

(b) *Built-in fire extinguishers.* Where a built-in fire-extinguishing system is required, its capacity in relation to the compartment volume and ventilation rate shall be sufficient to combat any fire likely to occur in the compartment. All built-in fire extinguishing systems shall be so installed that any extinguisher agent likely to enter personnel compartments will not be hazardous to the occupants and that discharge of the extinguisher cannot result in structural damage. (See also sec. 4b.371.)

(c) *Protective breathing equipment.* If the airplane contains Class A, B, or E cargo compartments (see sec. 4b.383), protective breathing equipment shall be installed for the use of appropriate crew members. (See sec. 4b.651 (h).)

4b.380–1 *Protective breathing equipment (FAA policies which apply to sec. 4b.380 (c)).* The policies outlined in section 4b.651–2 apply.

(19 F. R. 4463, July 20, 1954, effective Sept. 1, 1954.)

4b.380–2 *Approved hand fire extinguishers (FAA policies which apply to sec. 4b.380 (a)).*

(a) *Standards for approval.* An approved type fire extinguisher includes those approved by the Underwriters' Laboratories, Inc., Factory Mutual Laboratories, Underwriters' Laboratories of Canada, or any other agency deemed qualified by the Administrator, or approved by the Administrator in accordance with the provisions of section 4b.18.

(b) *General.* When selecting a hand fire extinguisher for use in aircraft, consideration should be given to the most appropriate extinguishing agent for the type and location of fires[16] likely to be encountered. Consideration should also be given to the agent's ratio of extinguishing ability to quantity required, toxicity, [17] corrosive properties, freezing point, and to the unit's gross weight, ease of operation, and maintenance requirements. Aircraft hand fire extinguishers using agents having a rating in toxicity Group 4 or under should not be installed in airplanes for which an application for a type certificate was made on or after March 5, 1952.[18]

[16] *Class A fires*—Fires in ordinary combustible materials where the quenching and cooling effects of quantities of water, or solutions containing large percentages of water, are of first importance.

Class B fires—Fires in flammable liquids, greases, etc., where a blanketing effect is essential.

Class C fires—Fires in electrical equipment, where the use of a nonconducting extinguishing agent is of first importance.

[17] The toxicity ratings listed by the Underwriters' Laboratories for some of the commonly known fire extinguisher chemicals are as follows:

Bromochloromethane	Group 3
Bromotrifluoromethane	Group 6
Carbon dioxide	Group 5
Carbon tetrachloride	Group 3
Dibromodifluoromethane	Group 4
Methyl bromide	Group 2

[18] Many transport type airplanes, due to their type certification basis, are not required to comply with section 4b.380. For such airplanes, it is recommended that hand fire extinguishers employing agents in toxicity Group 4 or higher be installed when renewing or replacing hand fire extinguishers employing toxic agents.

(c) *Types of extinguishers.*

(1) *Carbon dioxide extinguishers.*[19] Carbon dioxide extinguishers are acceptable when the principal hazard is a Class B or Class C fire. Carbon dioxide portable installations should not exceed five pounds of agent per unit to insure extinguisher portability and to minimize crew compartment CO_2 concentrations.

(2) *Water extinguishers.*[20] Water extinguishers are acceptable when the principal hazard is a Class A fire and where a fire might smolder if attacked solely by such agents as carbon dioxide or dry chemical.

(3) *Vaporizing liquid extinguishers.*[21] Vaporizing liquid type fire extinguishers are acceptable when the principal hazard is a Class B or Class C fire.

(4) *Dry chemical extinguishers.*[22] Dry chemical extinguishers are acceptable where the principal hazard is a Class B or Class C fire. The extinguisher should not be used in crew compartments because of interference with visibility during discharge and because of the possibility of the nonconductive powders being discharged on electrical contacts not otherwise involved.

(21 F. R. 5735, Aug. 1, 1956, effective Sept. 1, 1956.)

4b.381 *Cabin interiors.* All compartments occupied or used by the crew or passengers shall comply with the following provisions.

(a) The materials in no case shall be less than flash-resistant.

(b) The wall and ceiling linings, the covering of all upholstering, floors, and furnishings shall be flame-resistant.

[19] Carbon dioxide is noncorrosive and will not injure food or fabric. Extinguishers must be winterized if they are to operate at temperatures below −40° F. Approved unit capacity ranges upwards from two pounds. These extinguishers have only limited value for the extinguishment of Class A fires, the action of the agent being to blanket the fire by excluding oxygen.

[20] Certain antifreeze agents may be corrosive. Approved extinguishers are either protected against freezing to −40° F. or must be handled as any other unprotected water on the airplane. Technical Standard Order C19a covers a minimum 1¾ quart capacity approved water extinguisher. Water extinguishers of the kinds currently on the market are not acceptable for flammable liquid or electrical fires.

[21] These agents are not normally corrosive to aircraft structure and approved units will be satisfactorily protected against freezing to at least −40° F. Up to the effective date of this policy, no vaporizing liquid extinguisher with Underwriters' Laboratories toxicity rating higher than Group 4 is commercially available. Approved units have a minimum capacity of one quart. They are of only limited value for the extinguishment of Class A fires, having a cooling effect of about one-tenth that of water.

[22] The powder is nontoxic and noncorrosive and approved units are protected against freezing to at least −40° F. Minimum capacity of approved units is two pounds.

(c) Compartments where smoking is to be permitted shall be equipped with ash trays of the self-contained type which are completely removable. All other compartments shall be placarded against smoking.

(d) All receptacles for used towels, papers, and waste shall be of fire-resistant material, and shall incorporate covers or other provisions for containing possible fires.

(e) At least one hand fire extinguisher shall be provided for use by the flight crew.

(f) In addition to the requirements of paragraph (e) of this section at least the following number of hand fire extinguishers conveniently located for use in passenger compartments shall be provided according to the passenger capacity of the airplane:

Passenger capacity:	*Minimum number of fire extinguishers*
6 or less	0
7 through 30	1
31 through 60	2
61 or more	3

4b.381–1 *Hand fire extinguishers for cabin interiors (FAA policies which apply to sec. 4b.381 (e) and (f)).*

(a) *Crew compartment.* At least one hand fire extinguisher suitable for Class B and C fires should be installed in the crew compartment. Additional extinguishers may be required as dictated by potential fire hazards, extinguisher accessibility, and agent capacity.

(1) The extinguisher(s) should be readily accessible to crew members and mounted so as to facilitate quick removal from its mounting bracket.

(b) *Passenger compartments.* Fire extinguisher type and capacity should be based on the hazard, e. g., if a unit must protect large accessible baggage compartments, galleys, or electrical equipment racks, portables larger than minimum size should be provided. The size of the extinguisher should not, however, preclude ready portability by a flight attendant or even a passenger.

(1) Each fire extinguisher should be located adjacent to the most prominent hazard such as a baggage compartment, galley, etc.

(i) Where no such obvious hazard exists, or when only one unit is required, the extin-

guisher should be located at the flight attendant's station or at the entrance door on aircraft with no flight attendant.

(ii) Where two or more extinguishers are required and location is not dictated by special hazards, the units should be located at opposite ends of the passenger cabin.

(2) An extinguisher should be installed in each separate cabin, lounge, or smoking compartment unless the extinguisher in the adjacent compartment is in close proximity and easily accessible.

(3) All extinguishers should be easily accessible and clearly visible to the crew and passengers; however, if they cannot be clearly visible, their location should be indicated by a clearly legible placard or sign visible to the crew and passengers.[23]

(21 F. R. 5735, Aug. 1, 1956, effective Sept. 1, 1956.)

4b.382 *Cargo and baggage compartments.*

(a) Cargo and baggage compartments shall include no controls, wiring, lines, equipment, or accessories the damage or failure of which would affect the safe operation of the airplane, unless such items are shielded, isolated, or otherwise protected so that they cannot be damaged by movement of cargo in the compartment, and so that any breakage or failure of such item will not create a fire hazard.

(b) Provision shall be made to prevent cargo or baggage from interfering with the functioning of the fire-protective features of the compartment.

(c) All materials used in the contruction of cargo or baggage compartments, including tie-down equipment, shall be flame-resistant.

(d) Sources of heat within the compartment shall be shielded and insulated to prevent igniting the cargo.

Note: Sources of heat likely to ignite cargo include light bulbs, combustion heaters, heater ducts, electrical appliances, etc.

4b.383 *Cargo compartment classification.* All cargo and baggage compartments shall include provisions for safe-guarding against fires according to the following classification.

(a) *Class A.* Cargo and baggage compartments shall be classified as "A" if the presence of a possible fire therein would be easily discernible to a member of the crew while at his station, and if all parts of the compartment are easily accessible in flight. A hand fire extinguisher shall be available for each compartment. (See sec. 4b.380 (c) for protective breathing requirements.)

(b) *Class B.* Cargo and baggage compartments shall be classified as "B" if sufficient access is provided while in flight to enable a member of the crew to reach effectively all parts of the compartment and its contents with a hand fire extinguisher. Compliance shall be shown with the following:

(1) The design of the compartment shall be such that, when the access provisions are being used, no hazardous quantity of smoke, flames, or extinguishing agent will enter any compartment occupied by the crew or passengers. (See sec. 4b.380 (c) for protective breathing requirements.)

(2) Each compartment shall be equipped with a separate system of an approved type smoke detector or fire detector to give warning at the pilot or flight engineer station.

(3) Hand fire extinguishers shall be readily available for use in each compartment.

(4) The compartment shall be completely lined with fire-resistant material.

(c) *Class C.* Cargo and baggage compartments shall be classified as "C" if they do not conform to the prerequisites for the "A" or "B" classifications. Compliance shall be shown with the following:

(1) Each compartment shall be equipped with:

(i) A separate system of an approved type smoke detector or fire detector to give warning at the pilot or flight engineer station, and

(ii) An approved built-in fire-extinguishing system controlled from the pilot or flight engineer station.

(2) Means shall be provided to exclude hazardous quantities of smoke, flames, or extinguishing agent from entering into any compartment occupied by the crew or passengers.

(3) Ventilation and drafts shall be controlled within each compartment so that the

[23] It is recommended that signs indicating location of extinguishers have letters at least 3/8 inch in height mounted on a contrasting background.

extinguishing agent provided can control any fire which may start within the compartment.

(4) The compartment shall be completely lined with fire-resistant material.

(d) *Class D.* Cargo and baggage compartments shall be classified as "D" if they are so designed and constructed that a fire occurring therein will be completely confined without endangering the safety of the airplane or the occupants. Compliance shall be shown with the following:

(1) Means shall be provided to exclude hazardous quantities of smoke, flames, or other noxious gases from entering into any compartment occupied by the crew or passengers.

(2) Ventilation and drafts shall be controlled within each compartment so that any fire likely to occur in the compartment will not progress beyond safe limits.

NOTE: For compartments having a volume not in excess of 500 cu. ft. an airflow of not more than 1,500 cu. ft. per hour is considered acceptable. For larger compartments lesser airflow may be applicable.

(3) The compartment shall be completely lined with fire-resistant material.

(4) Consideration shall be given to the effect of heat within the compartment on adjacent critical parts of the airplane.

(e) *Class E.* On airplanes used for the carriage of cargo only it shall be acceptable to classify the cabin area as a Class "E" compartment. Compliance shall be shown with the following:

(1) The compartment shall be completely lined with fire-resistant material.

(2) The compartment shall be equipped with a separate system of an approved type smoke or fire detector to give warning at the pilot or flight engineer station.

(3) Means shall be provided to shut off the ventilating airflow to or within the compartment. Controls for such means shall be accessible to the flight crew in the crew compartment.

(4) Means shall be provided to exclude hazardous quantities of smoke, flames, or noxious gases from entering the flight crew compartment. (See sec. 4b.380(c) for protective breathing equipment.)

(5) Required crew emergency exits shall remain accessible under all cargo loading conditions.

4b.384 *Proof of compliance.*

(a) Compliance with those provisions of section 4b.383 which refer to compartment accessibility, to the entry of hazardous quantities of smoke or extinguishing agent into compartments occupied by the crew or passengers, and to the dissipation of the extinguishing agent in class C compartments shall be demonstrated by tests in flight.

(b) It shall also be demonstrated during the tests prescribed in paragraph (a) of this section that no inadvertent operation of smoke or fire detectors in adjacent or other compartments within the airplane would occur as a result of fire contained in any one compartment, either during or after extinguishment, unless the extinguishing system floods such compartments simultaneously.

4b.384–1 *Cargo and baggage compartments equipped with carbon dioxide fire extinguishers (FAA policies which apply to sec. 4b.384).* The policies outlined in section 4b.484–1 apply.

(19 F. R. 4463, July 20, 1954, effective Sept. 1, 1954.)

4b.385 *Flammable fluid fire protection.* In areas of the airplane where flammable fluids or vapors might be liberated by leakage or failure in fluid systems, design precautions shall be made to safeguard against the ignition of such fluids or vapors due to the operation of other equipment, or to control any fire resulting from such ignition.

4b.386 *Combustion heater fire protection.*

(a) *Combustion heater fire zones.* The following shall be considered as combustion heater fire zones and shall be protected against fire in accordance with applicable provisions of sections 4b.480 through 4b.486 and section 4b.489:

(1) Region surrounding the heater, if such region contains any flammable fluid system components other than the heater fuel system which might be damaged by heater malfunctioning or which, in case of leakage or failure, might permit flammable fluids or vapors to reach the heaters.

(2) Region surrounding the heater, if the heater fuel system incorporates fittings the

leakage of which would permit fuel or vapors to enter this region.

(3) That portion of the ventilating air passage which surrounds the combustion chamber except that no fire extinguishment need be provided in cabin ventilating air passages.

(b) *Ventilating air ducts.*

(1) Ventilating air ducts which pass through fire zones shall be of fireproof construction.

(2) Unless isolation is provided by the use of fireproof valves or other equivalently effective means, the ventilating air duct downstream of the heater shall be of fireproof construction for a sufficient distance to assure that any fire originating from within the heater can be contained within the duct.

(3) Portions of ventilating ducts passing through regions in the airplane where flammable fluid systems are located shall be so constructed or isolated from such systems that failure or malfunctioning of the flammable fluid system components cannot introduce flammable fluids or vapors into the ventilating airstream.

(c) *Combustion air ducts.*

(1) Combustion air ducts shall be of fireproof construction for a distance sufficient to prevent damage from backfiring or reverse flame propagation.

(2) Combustion air ducts shall not communicate with the ventilating airstream unless it is demonstrated that flames from backfires or reverse burning cannot enter the ventilating airstream under any conditions of ground or flight operation including conditions of reverse flow or malfunctioning of the heater or its associated components.

(3) Combustion air ducts shall not restrict prompt relief of backfires which can cause heater failure due to pressures generated within the heater.

(d) *Heater controls; general.* Provision shall be made to prevent hazardous accumulations of water or ice on or within any heater control components, control system tubing, or safety controls.

(e) *Heater safety controls.*

(1) In addition to the components provided for normal continuous control of air temperature, air flow, and fuel flow, means independent of such components shall be provided with respect to each heater to shut off automatically that heater's ignition and fuel supply at a point remote from the heater when the heat exchanger temperature or ventilating air temperature exceed safe limits or when either the combustion air flow or the ventilating air flow becomes inadequate for safe operation. The means provided for this purpose for any individual heater shall be independent of all components serving other heaters the heat output of which is essential to the safe operation of the airplane.

(2) Warning means shall be provided to indicate to the crew when a heater, the heat output of which is essential to the safe operation of the airplane, has been shut off by the operation of the automatic means prescribed in subparagraph (1) of this paragraph.

(f) *Air intakes.* Combustion and ventilating air intakes shall be so located that no flammable fluids or vapors can enter the heater system under any conditions of ground or flight operation either during normal operation or as a result of malfunctioning, failure, or improper operation of other airplane components.

(g) *Heater exhaust.* Heater exhaust systems shall comply with the provisions of section 4b.467 (a) and (b). In addition, provisions shall be made in the design of the heater exhaust system so that the products of combustion will be safely conveyed overboard to prevent the occurrence of the following:

(1) Fuel leakage from the exhaust to surrounding compartments;

(2) Exhaust gas impingement on surrounding equipment or structure;

(3) Ignition of flammable fluids by the exhaust, when the exhaust is located in a compartment containing flammable fluid lines;

(4) Restriction by the exhaust of the prompt relief of backfires which can cause heater failure due to pressure generated within the heater.

(h) *Heater fuel systems.* Heater fuel systems shall comply with all portions of the powerplant fuel system requirements which affect safe heater operations. In addition, heater fuel system components within the

ventilating airstream shall be protected by shrouds so that leakage from such components cannot enter the ventilating airstream.

(i) *Drains.* Means shall be provided for safe drainage of fuel accumulations which might occur within the combustion chamber or the heat exchanger. Portions of such drains which operate at high temperatures shall be protected in the same manner as heater exhausts (see paragraph (g) of this section). Drains shall be protected against hazardous ice accumulations in flight and during ground operation.

Miscellaneous

4b.390 *Reinforcement near propellers.* Portions of the airplane near propeller tips shall have sufficient strength and stiffness to withstand the effects of the induced vibration and of ice thrown from the propeller. Windows shall not be located in such regions unless shown capable of withstanding the most severe ice impact likely to occur.

4b.391 *Leveling marks.* Reference marks shall be provided for use in leveling the airplane to facilitate weight and balance determinations on the ground.

Subpart E—Powerplant Installation

Installation

4b.400 *General.* The powerplant installation shall be considered to include all components of the airplane which are necessary for its propulsion. It shall also be considered to include all components which affect the control of the major propulsive units or which affect their safety of operation between normal inspections or overhaul periods. (See secs. 4b.604 and 4b.613 for instrument installation and marking.)

(a) *Scope.* Reciprocating engine installations shall comply with the provisions of this subpart. Turbine engine installations shall comply with such of the provisions of this subpart as are found applicable to the specific type of installation.

(b) *Functioning.* All components of the powerplant installation shall be constructed, arranged, and installed in a manner which will assure their continued safe operation between normal inspections or overhaul periods.

(c) *Accessibility.* Accessibility shall be provided to permit such inspection and maintenance as is necessary to assure continued airworthiness.

(d) *Electrical bonding.* Electrical interconnections shall be provided to prevent the existence of differences of potential between major components of the powerplant installation and other portions of the airplane.

4b.400–1 *Engine and propeller operation (FAA policies which apply to sec. 4b.400).* The engines and propellers should be observed during the flight test program to determine satisfactory operation of these systems and their associated components.

(19 F. R. 4463, July 20, 1954, effective Sept. 1, 1954.)

4b.400–2 *Powerplant installation components (FAA interpretations which apply to sec. 4b.400).* The term "all components" includes engines and propellers and their parts, appurtenances, and accessories which are furnished by the engine or propeller manufacturer and all other components of the powerplant installation which are furnished by the airplane manufacturer. For example: fuel pumps, lines, valves and other components of the fuel system which are integral parts of the type certificated engine are also components of the airplane powerplant installation.

(23 F. R. 9018, Nov. 20, 1958, effective Dec. 22, 1958.)

4b.401 *Engines.*

(a) *Type certification.* All engines shall be type certificated in accordance with the provisions of Part 13 of this subchapter.

(b) *Engine isolation.* The powerplants shall be arranged and isolated each from the other to permit operation in at least one configuration in a manner such that the failure or malfunctioning of any engine, or of any system of the airplane the failure of which can affect an engine, will not prevent the continued safe operation of the remaining engine(s) or require immediate action by a crew member for continued safe operation.

(c) *Control of engine rotation.* Means shall be provided for individually stopping and restarting the rotation of any engine in flight, except that for turbine engine installations means for stopping the rotation need be provided only if such rotation could jeopardize the safety of the airplane. All components provided for this purpose which are located on the engine side of the firewall and which might be exposed to fire shall be of fire-resistant construction. If hydraulic propeller feathering systems are used for this purpose, the feathering lines on all airplanes manufactured after June 30, 1954, shall be fire-resistant under the operating conditions which may be expected to exist when feathering is being accomplished. (See also sec. 4b.449.)

(d) *Rotor blade protection.* Turbine powerplant installations shall include a means of protection such that the occurrence of rotor blade failure in any engine will not affect the operation of remaining engines nor jeopardize the continued safe operation of the airplane, unless the engine type certificate specifies that the engine rotor cases have been substantiated as capable of containing the damage resulting from rotor blade failure.

(e) *Engine turbine rotor.* Design precautions shall be taken to minimize the probability of jeopardizing the safety of the airplane in the event of engine turbine rotor failure, unless the engine type certificate specifies that the turbine rotors have been demonstrated to provide sufficient strength to withstand damage inducing factors such as those which might result from abnormal rotor speeds, temperature, or vibration and the design and functioning of the powerplant systems associated with engine control devices, systems, and instrumentation are such as to give reasonable assurance that those engine operating limitations which adversely affect turbine rotor structural integrity will not be exceeded in service.

4b.401–1 *Approval of automatic propeller feathering system (FAA policies which apply to sec. 4b.401 (c)).* All parts of the feathering device which are integral with the propeller or attached to it in a manner that may affect propeller airworthiness should be considered from the standpoint of the applicable provisions of Part 14. The determination of the continuing eligibility of the propeller under the existing type certificate, when the device is installed or attached, will be made on the following basis:

(a) The automatic propeller feathering system should not adversely affect normal propeller operation and should function properly under all temperature, altitude, airspeed, vibration, acceleration, and other conditions to be expected in normal ground and flight operation.

(b) The automatic device should be demonstrated to be free from malfunctioning which may cause feathering under any conditions other than those under which it is intended to operate. For example, it should not cause feathering during:

(1) Momentary loss of power.

(2) Approaches with reduced throttle settings.

(c) The automatic propeller feathering system should be capable of operating in its intended manner whenever the throttle control is in the normal position to provide takeoff power. No special operations at the time of engine failure should be necessary on the part of the crew in order to make the automatic feathering system operative.

(d) The automatic propeller feathering installation should be such that not more than one engine will be feathered automatically even if more than one engine fails simultaneously.

(e) The automatic propeller feathering installation should be such that normal operation may be regained after the propeller has begun to feather automatically.

(f) The automatic propeller feathering installation should incorporate a switch or equivalent means by which to make the system inoperative. (See also sec. 4b.10–2.)

(19 F. R. 1818, Apr. 2, 1954, effective Apr. 2, 1954.)

4b.401–2 *Propeller feathering system operational tests (FAA policies which apply to sec. 4b.401 (c)).*

(a) Tests should be conducted to determine the time required for the propeller to change from windmilling (with the propeller controls set for takeoff) to the feathered position at the takeoff safety speed, V_2.

(b) (1) The propeller feathering system should be tested to demonstrate nonrotation up to 1.2 times the maximum level flight speed with one

engine inoperative or the speed employed in emergency descents whichever is higher with:

Critical engine—inoperative.
Wing flaps—retracted.
Landing gear—retracted.
Cowl flaps—closed.

(2) A sufficient speed range should be covered to assure that the propeller feathering angle established on the basis of the high speed requirement should not permit rotation in reverse at the lower speeds. In addition, the propeller should not inadvertently unfeather during these tests.

(c) In order to demonstrate that the feathering system operates satisfactorily, the propeller should be feathered and unfeathered at the maximum operating altitude established in accordance with section 4b.722. The following data should be recorded:

Time to feather propeller at the one-engine-inoperative cruising speed.
Time to unfeather propeller to 1000 r. p. m. at maximum operating altitude and one-engine-inoperative cruising speed.
Altitude of propeller feathering tests.
Ambient air temperature of propeller feathering tests.

(19 F. R. 4463, July 20, 1954, effective Sept. 1, 1954.)

4b.401–3 *Continued rotation of turbine engines (FAA policies which apply to sec. 4b.401 (c)).*

(a) If means are not provided to completely stop the rotation of turbine engines it should be shown that continued rotation,[24] either windmilling or controlled, of a shutdown turbine engine will not cause:

(1) Powerplant (including engine and accessories) structural damage which will adversely affect other engines or the aircraft structure;

(2) Flammable fluid to be pumped into a fire or onto an ignition source; or

(3) A vibration mode which will adversely affect the aerodynamic or structural integrity of the airplane.

(b) Feathered propellers, brakes, doors or other means used to control turbine engine rotation need not produce a complete stop of engine rotation[24] under all flight conditions unless continued rotation will result in any of the conditions set forth in paragraph (a).

(c) If engine induction air duct doors, or shaft, or other types of brakes[25] are provided to control engine rotation, no single fault or failure of the system controlling engine rotation should cause the inadvertent travel of the doors toward the closed position, or the inadvertent energizing of braking means, unless compensating features are provided to assure that engine failure or a critical operating condition will not occur.

(22 F. R. 5793, July 20, 1957, effective Aug. 15, 1957.)

4b.401–4 *Engine operation with automatic propeller control system installed (FAA policies which apply to sec. 4b.401 (b)).*

(a) When an automatic control system for simultaneous r. p. m. control of all propellers is installed, it should be shown that no single failure or malfunction in this system or in an engine controlling this system will:

(1) Cause the tolerable engine overspeed for this condition[26] to be exceeded at any time, and

(2) Cause a loss of thrust which will cause the airplane to descend below the established takeoff path (sec. 4b.116) if such system is certificated for use during takeoff and climb. This should be shown for all weights and altitudes for which certification is desired. A period of five seconds should be allowed from the time the malfunction occurs to the initial motion of the cockpit control for corrective action taken by the crew.

(b) Compliance with this policy may be shown by (1) analysis, (2) flight demonstration, or (3) a combination of analysis and flight demonstration.

(22 F. R. 6883, Aug. 27, 1957, effective Sept. 15, 1957.)

4b.402 *Propellers.* Propellers shall be type certificated in accordance with the provisions of Part 14 of this subchapter. The maximum propeller shaft rotational speed and the engine power permissible for use in the airplane

[24] It may be assumed that the conditions in paragraph (a) will not occur at engine rotor speeds up to 400 r.p.m.

[25] The provision of doors or brakes is a protective feature to assure that the conditions of paragraph (a) will not occur. Such provision, therefore, should be of a high order of reliability, and the probability should be remote that doors or brakes will not function normally on demand.

[26] 105 percent of takeoff r. p. m. will be considered tolerable for this condition for all engines, except that higher overspeeds may be acceptable if the engine manufacturer substantiates a higher value to the FAA.

shall not exceed the corresponding limits for which the propeller has been certificated.

4b.402–1 *Reverse thrust propeller installations (FAA policies which apply to sec. 4b.402).* The Administrator may approve reverse thrust propeller installations which comply with the following:

(a) Exceptional pilot skill should not be required in taxiing or any condition in which reverse thrust is to be used.

(b) Necessary operating procedures, operating limitations and placards should be established.

(c) The airplane control characteristics should be satisfactory with regard to control forces encountered, and buffeting should not be likely to cause structural damage.

(d) The directional control should be adequate using normal piloting skill.

(e) It should be determined that no dangerous condition is encountered in the event of sudden failure of one engine in any likely operating condition.

(f) The operating procedures and airplane configuration should be such as to provide reasonable safeguards against serious structural damage to parts of the airplane due to the reverse airflow.

(g) It should be determined that the pilot's vision is not dangerously obscured under normal operating conditions on dusty or wet runways and where light snow is on the runway.

(h) It should be determined that the pilot's vision is not dangerously obscured by spray due to reverse airflow under normal water operating conditions with seaplanes.

(i) The procedure and mechanisms for reversing should provide a reverse idle setting such that without requiring exceptional piloting skill at least the following conditions are met:

(1) Sufficient power is maintained to keep the engine running at an adequate speed to prevent engine stalling during and after the propeller reversing operation.

(2) The propeller does not overspeed during and after the propeller reversing operation.

(3) This idle setting does not exceed 25% of the maximum continuous rating.

(j) The engine cooling characteristics should be satisfactory in any likely operating condition.

(k) The use of reverse thrust will be permitted, in combination with the brakes installed, in establishing the accelerate-stop distance, if it is shown that such use provides a level of safety equivalent to that when wheel brakes alone are used, taking into consideration pilot skill required and the likelihood of attaining the necessary performance under conditions of simulated engine failure. Either of the following conditions and limitations should be used:

(1) Symmetrical reverse thrust on (n-2) engines with power not to exceed the maximum continuous rating, where n is equal to the number of engines.

(2) Asymmetrical reverse thrust on (n-1) engines in reverse idle setting. This operation should be permitted only where it can be shown that with use of this asymmetrical reverse thrust the airplane can be satisfactorily controlled on a wet runway.

(l) On four-engine aircraft the use of reverse thrust will be permitted in combination with the brakes installed in establishing the landing distance if it is shown that such use provides a level of safety equivalent to that when wheel brakes alone are used taking into consideration pilot skill required and the likelihood of attaining the necessary performance under conditions of simulated engine failure. Determination of landing distance should be conducted in accordance with section 4b.122 and section 4b.123 with the following additional provisions:

(1) A steady gliding approach should be made on an ILS flight path corresponding to the average value of 2½ degrees, except that this prescribed approach will not be required if the application of reverse thrust credit is limited to operations on dry and ice free runways under VFR conditions.

(2) The two most critical symmetrical engines may be placed in the reverse idle position not sooner than four seconds after the aircraft is firmly on the ground.

(3) An accelerated service test should be conducted in accordance with section 4b.16 (b) to establish reliability of the installation which should include not less than 25 landings, covering a range of power settings during the approach and a range of altitudes for which approval is desired.

(20 F. R. 2279, Apr. 8, 1955, effective Apr. 30, 1955.)

4b.403 *Propeller vibration.* The magnitude of the propeller blade vibration stresses under all normal conditions of operation shall be determined by actual measurement or by comparison with similar installations for which such measurements have been made. The vibration stresses thus determined shall not exceed values which have been demonstrated to be safe for continuous operation.

4b.404 *Propeller pitch and speed limitations.*

(a) The propeller pitch and speed shall be limited to values which will assure safe operation under all normal conditions and which will assure compliance with the performance requirements specified in sections 4b.110 through 4b.125.

(b) A propeller speed limiting means shall be provided at the governor. Such means shall be set to limit the maximum possible governed engine speed to a value not exceeding the maximum permissible r. p. m.

(c) The low pitch blade stop in the propeller, or other means used to limit the low pitch position, shall be set so that the engine speed does not exceed 103 percent of the maximum permissible engine r. p. m. under the following conditions:

(1) Propeller blades at the low pitch limit and governor inoperative, and

(2) Engine operating at take-off manifold pressure with the airplane stationary under standard atmospheric conditions.

4b.405 *Propeller clearance.* With the airplane loaded to the maximum weight and at the most adverse center of gravity position and the propellers in the most adverse pitch position, the propeller clearances shall not be less than the following, unless smaller clearances are substantiated for the particular design involved.

(a) *Ground.* Seven inches of ground clearance for airplanes equipped with nose-wheel type landing gears, or nine inches of ground clearance for airplanes equipped with tail-wheel type landing gears shall be provided with the landing gear statically deflected and the airplane in the level take-off or in the taxying attitude, whichever is most critical. In addition, there shall be positive clearance between the propeller and the ground when, with the airplane in the level take-off attitude, the critical tire is completely deflated and the corresponding landing gear strut is completely bottomed.

(b) *Water.* A water clearance of 18 inches shall be provided unless compliance with section 4b.182 (a) is demonstrated with less clearance.

(c) *Structure.*

(1) One inch radial clearance shall be provided between the blade tips and the airplane structure, or whatever additional radial clearance is necessary to preclude harmful vibration of the propeller or airplane.

(2) One-half inch longitudinal clearance shall be provided between the propeller blades or cuffs and all stationary portions of the airplane.

(3) Positive clearance shall be provided between other rotating portions of the propeller or spinner and all stationary portions of the airplane.

[CAR, 15 F. R. 3543, June 8, 1950, as amended by Amdt. 4 b-7, 17 F. R. 11631, Dec. 20, 1952.]

4b.406 *Propeller de-icing provisions.*

(a) Airplanes intended for operation under atmospheric conditions conducive to the formation of ice on propellers or on accessories where ice accumulation would jeopardize engine performance shall be provided with means for the prevention or removal of hazardous ice accumulations.

(b) If combustible fluid is used for propeller de-icing, the provisions of sections 4b.480 through 4b.483, inclusive, shall be complied with.

4b.406–1 *Fluid type propeller de-icing test (FAA policies which apply to sec. 4b.406).* If the propellers are equipped with fluid type de-icers, the flow test should be conducted starting with a full tank of fluid and operated at maximum flow for a 15-minute timed period. The operation should be checked at all engine speeds and powers. The tank should be refilled to determine the amount of fluid used after the airplane is landed.

(19 F. R. 4463, July 20, 1954, effective Sept. 1, 1954.)

4b.407 Reversing systems.

(a) Reversing systems intended for ground operation only shall be such that no single

542115 O—60——10

failure or malfunctioning of the system under all anticipated conditions of airplane operation will result in unwanted reverse thrust. Failure of structural elements need not be considered if occurrence of such failure is expected to be extremely remote.

(b) Turbo-jet reversing systems intended for inflight use shall be such that no unsafe condition will result during normal operations of the system, or from any failure or reasonably likely combination of failures of the reversing system, under all anticipated conditions of operation of the airplane. Failure of structural elements need not be considered if occurrence of such failure is expected to be extremely remote.

4b.407–1 *Investigation of propeller systems which produce negative thrust (FAA policies which apply to sec. 4b.407).*

(a) Compliance with section 4b.407 may be demonstrated by failure analysis, testing, or a combination of both for propeller systems that allow propeller blades to move from the flight low-pitch position to a position [27] that is substantially less than that at the normal flight low-pitch stop position.

(b) The analysis should disclose, for all components involved in the reversing system, the types of failure or malfunction likely to occur, how such failures or malfunctions affect propeller pitch, and the design feature that prevents unwanted travel of the propeller blades to a position substantially below the normal flight low-pitch stop. The analysis may include, or be supported by, the analysis made to demonstrate compliance with the requirements of section 14.103 of this subchapter for the propeller and associated installation components supplied with it.

(c) When necessary, testing should be conducted to verify assumptions made in the analysis of how the propeller will function with a failed system component and that the design feature provided does in fact prevent unwanted travel of the propeller blades.

(22 F. R. 6885, Aug. 27, 1957, effective Sept. 15, 1957).

[27] Where the blade position is intended to provide increased drag during the landing run (ground fine pitch) or a reversed propeller blade position.

4b.408 *Turbo-propeller-drag limiting systems.* For turbo-propeller-powered airplanes, propeller-drag limiting systems shall be such that no single failure or malfunction of any of the systems during normal or emergency operation will result in propeller drag in excess of that for which the airplane was designed in compliance with section 4b.216 (d). Failure of structural elements of the drag limiting systems need not be considered if occurrence of such failure is expected to be extremely remote. (See also sec. 4b.310.)

4b.409 *Turbine powerplant operating characteristics.* Turbine powerplant operating characteristics shall be investigated in flight to determine that no adverse characteristics, such as stall, surge, or flameout, are present to a hazardous degree during normal and emergency operation of the airplane within the range of operating limitations of the airplane and of the engine.

Fuel System Operation and Arrangement

4b.410 *General.*

(a) The fuel system shall be constructed and arranged in such a manner as to assure a flow of fuel at a rate and pressure which have been established for proper engine functioning under all likely operating conditions, including all maneuvers for which the airplane is intended. (For fuel system instruments see sec. 4b.604.)

(b) The fuel system shall be so arranged that no one fuel pump can draw fuel from more than one tank at a time unless means are provided to prevent introducing air into the system.

4b.411 *Fuel system independence.* The design of the fuel system shall comply with the requirements of section 4b.401 (b). Unless other provisions are made in compliance with this requirement, the fuel system shall be arranged to permit the supply of fuel to each engine through a system independent of any portion of a system supplying fuel to any other engine.

4b.412 *Pressure cross-feed arrangements.*

(a) Pressure cross-feed lines shall not pass through portions of the airplane intended to

carry personnel or cargo, unless means are provided to permit the flight personnel to shut off the supply of fuel to these lines, or unless the lines are enclosed in a fuelproof and fumeproof shroud which is ventilated and drained to the exterior of the airplane.

(b) The shrouds specified in paragraph (a) of this section need not be used if the lines are routed or protected to safeguard against accidental damage and if they do not incorporate any fittings within the personnel or cargo areas.

(c) Lines which can be isolated from the remainder of the fuel system by means of valves at each end shall incorporate provisions for the relief of excessive pressures which might result from exposure of the isolated line to high ambient temperatures.

4b.413 *Fuel flow demonstration.*

(a) The fuel flow available for use by the engine shall be demonstrated to be at least 125 percent of the fuel flow required to develop the maximum horsepower or thrust selected for airplane certification, when the airplane is in operating conditions appropriate to the use of such power or thrust.

(b) The ability of the system to provide at least 100 percent of the fuel flow required by the engines shall be demonstrated when the airplane is in the operating condition, including attitude and altitude, which represents the most adverse condition from the standpoint of fuel feed which the airplane is designed to attain.

(c) During the demonstration prescribed in paragraphs (a) and (b) of this section, the following provisions shall apply:

(1) Fuel shall be delivered to the engine at a pressure within the limits specified in the engine type certificate.

(2) The quantity of fuel in the tank being considered shall not exceed the amount established as the unusable fuel supply for that tank, as determined by demonstrating compliance with the provisions of section 4b.416 (see also sections 4b.420 and 4b.613(b)), together with whatever minimum quantity of fuel it may be necessary to add for the purpose of conducting flow test.

(3) Such main pumps shall be used as are necessary for each operating condition and airplane attitude for which the demonstrations are made. For each main pump so used, the demonstration shall be repeated, substituting the appropriate emergency pump, when required, for the main pump. (See sec. 4b.430(b).)

(4) If a fuel flowmeter is provided, the meter shall be blocked only during the flow test prescribed in paragraph (b) of this section and the fuel shall flow through the meter or its bypass.

(5) It shall be acceptable to conduct the demonstrations prescribed in paragraphs (a) and (b) of this section by a ground test on the airplane or on a representative mock-up of the fuel system.

4b.415 *Transfer systems.* The provisions of section 4b.413 shall apply to transfer systems, except that the required fuel flow rate for the engine or engines involved shall be established upon the basis of maximum continuous power and its corresponding speed instead of take-off power and its corresponding speed.

4b.416 *Determination of unusable fuel supply and fuel system operation on low fuel.*

(a) The quantity of fuel with which compliance with the provision of this paragraph is demonstrated shall be selected by the applicant who, in addition, shall indicate which of the conditions specified in paragraph (b) of this section are most likely to be critical from the standpoint of establishing the unusable fuel supply, and also indicate the order in which the other conditions may be critical.

(b) The unusable fuel supply for each tank used for take-off and landing shall be established as not less than the quantity at which the first evidence of malfunctioning occurs under the following conditions: (See sec. 4b.420.)

(1) Level flight at maximum continuous power or at the power required for level flight at V_c, whichever is the lesser,

(2) Climb with take-off flaps and landing gear up, at take-off power, at landing weight, and at speed V_2 determined in accordance with sec. 4b.114 (b),

(3) Rapid application of maximum continuous power and subsequent transition to a

climb at speed V_2 determined in accordance with sec. 4b.114 (b), with retraction of flaps and landing gear, from a power-off glide at 1.3 V_{S_0}, with flaps and landing gear down, at landing weight.

(c) If an engine can be supplied with fuel from more than one tank, it shall be possible to regain the full fuel pressure of that engine in not more than 20 seconds after switching to any fuel tank after engine malfunctioning becomes apparent due to the depletion of the fuel supply in any tank from which the engine can be fed. Compliance with this provision shall be demonstrated in level flight.

(d) The unusable fuel supply for all tanks other than those used for takeoff and landing shall be established as not less than the quantity at which the first evidence of malfunctioning occurs under the conditions specified in paragraph (b) (1) of this section. It shall be acceptable to demonstrate compliance with this requirement by a ground test.

4b.416–1 *Unusable fuel (FAA interpretation which applies to sec. 4b.416).* The unusable fuel should be considered that fuel drainable from the tank sump with the airplane on the ground in a normal attitude with the wings leveled laterally after a fuel tank runout [28] test has been made.

(19 F. R. 4463, July 20, 1954, effective Sept. 1, 1954.)

4b.416–2 *Determination of unusable fuel supply and fuel system operation (FAA policies which apply to sec. 4b.416).*

(a) *General test program.* Tests for unusable fuel may be conducted at optional altitudes with all engines operating. The auxiliary fuel pumps should be turned "off" or "on" during the tests depending upon the normal operating procedure established for the airplane, or if the auxiliary pumps are being considered for use as emergency pumps they should be inoperative to at least 6,000 feet. The unusable fuel should be determined in each unique tank selection arrangement used for takeoff and landing by making runouts during the most critical of the three conditions specified in (b), (c), and (d). When a runout occurs, the fuel selector switch should be turned to a full tank. It should be possible to regain engine fuel pressure in not more than 20 seconds after switching to any full tank when engine malfunctioning has become apparent due to depletion of the fuel supply in any tank from which the engine can be fed after the airplane has been restored to a level flight condition. The tanks should be drained after landing to determine the unusable fuel quantity. In the case of fuel in tanks other than those used for takeoff and landing, the unusable fuel should be determined in the manner prescribed in (b) or during ground tests.

(b) *Level flight at maximum continuous power or at the power required for level flight at* Vc *whichever is the lesser, section 4b.416 (b) (1).*

(1) *Configuration.* This test should be conducted in the configuration that follows:

Weight—optional.
C. G. position—optional.
Wing flaps—retracted.
Landing gear—retracted.
Cowl flaps—optional.

(2) *Test procedure.* See (a).

(c) *Climb with takeoff power at speed* V_2, *section 4b.416 (b) (2).*

(1) *Configuration.* This test should be conducted in the configuration that follows:

Weight—not more than maximum landing weight.
C. G. position—optional.
Wing flaps—takeoff position.
Landing gear—retracted.
Cowl flaps—optional.

(2) *Test procedure.* See (a).

(d) *Rapid application of maximum continuous power and subsequent transition to a climb at a speed* V_2 *determined in accordance with section 4b.114 (b), with retraction of flaps and landing gear, from a power-off glide at 1.3* V_{S_0} *with flaps and landing gear down at landing weight, section 4b.416 (b) (3).*

(1) *Configuration.* This test should be conducted in the configuration that follows:

C. G. position—optional.
Cowl flaps—optional.

(2) *Test procedure.* See (a).

(19 F. R. 4463, July 20, 1954, effective Sept. 1, 1954.)

4b.417 *Fuel system hot weather operation.*

(a) To prove satisfactory hot weather opera-

[28] A fuel tank runout is considered to have occurred when the engine fuel pressure shows a marked decrease and/or the first evidence of engine malfunctioning occurs.

tion the airplane shall be climbed from the altitude of the airport chosen by the applicant to the altitude corresponding with that at which the one-engine-inoperative best rate of climb is not greater than the en route climb with the configuration and at the weight specified in section 4b.120 (c). There shall be no evidence of vapor lock or other malfunctioning. The climb test shall be conducted under the following conditions:

(1) For reciprocating-engine-powered airplanes, all engines shall operate at maximum continuous power, except that take-off power shall be used for the altitude range extending from 1,000 feet below the critical altitude through the critical altitude. The time interval during which take-off power is used shall not be less than the take-off time limitation. For turbine-engine-powered airplanes, all engines shall operate at take-off power for the time interval selected by the applicant in demonstrating the take-off flight path and thereafter shall operate at maximum continuous power for the duration of the climb.

(2) The weight shall be with full fuel tanks, minimum crew, and such ballast as is required to maintain the center of gravity within allowable limits.

(3) The speed of climb shall not exceed that which will permit compliance with the minimum climb requirement specified in section 4b.119 (a).

(4) The fuel temperature shall be not less than 110° F.

(b) The test prescribed in paragraph (a) of this section shall be performed either in flight or on the ground closely simulating flight conditions. If a flight test is performed in weather sufficiently cold to interfere with the proper conduct of the test, the fuel tank surfaces, fuel lines, and other fuel system parts subjected to cooling action from cold air shall be insulated to simulate, in so far as practicable, flight in hot weather.

4b.417–1 *Hot weather fuel system tests (FAA policies which apply to sec. 4b.417).*

(a) Hot weather fuel system tests should be conducted with fuel in the tanks normally used for takeoff and landing and with the maximum number of engines drawing fuel from the tank as would normally occur in flight. In the case of symmetrical fuel tank systems, the tests may be confined to one of each such system. Unweathered fuel should be used during these demonstrations. The fuel temperature should be 110° F. just prior to takeoff. If the fuel must be heated to this temperature, caution should be taken to prevent overheating during the process. The auxiliary fuel pumps should be turned "off" or "on" during the tests depending upon the normal operating procedure established for the airplane. If the auxiliary pumps are being considered for use as emergency pumps they should be inoperative to at least 6,000 feet. A fuel pressure failure is considered to occur when the fuel pressure decreases below the minimum prescribed by the engine manufacturer.

(b) *Configuration.* This test should be conducted in the configuration that follows:

Weight—corresponding to operation with full fuel tanks, minimum crew and ballast required to maintain airplane within center of gravity limits.

C. G. position—optional, within allowable limits.

Wing flaps—most favorable position.

Landing gear—retracted.

Cowl flaps—in a position that provides adequate cooling in the hot day condition.

Engines—See (c).

(c) *Test procedure and required data.* The takeoff and climb should be made as soon as possible after the fuel in the tank has been heated to 110° F. The airspeed during the climb should not exceed that speed used in demonstrating the requirements specified in section 4b.119 (a). If the engines are normally operated with the auxiliary pumps "off," they should be turned "on" when a fuel pressure failure occurs. Restoration of fuel pressure should be noted and the climb continued to the maximum operating altitude selected by the applicant for certification. The following data should be recorded at reasonable time intervals:

Fuel temperature at start of test.

Fuel pressure at start of test and continuously during climb noting any pressure failures.

Auxiliary fuel pump operation.

Pressure altitude.

Ambient air temperature.
Airspeed.
Engines, r. p. m. and manifold pressure.
Comments on engine operation.

(19 F. R. 4463, July 20, 1954, effective Sept. 1, 1954; amended 22 F. R. 6963, Aug. 29, 1957, effective Sept. 15, 1957.)

4b.418 *Flow between interconnected tanks.*

(a) Where tank outlets are interconnected and permit flow through the interconnection due to gravity or flight accelerations, it shall not be possible for fuel to flow between tanks in quantities sufficient to cause an overflow of fuel from the tank vent with the tanks full when the airplane is operated as prescribed in section 4b.416 (b) except that weights greater than the landing weight shall be acceptable if necessary because of the fuel loading.

(b) If it is possible to pump fuel from one tank to another in flight, the design of the fuel tank vents and the fuel transfer system shall be such that structural damage to tanks will not occur in the event of overfilling.

4b.418–1 *Determination of fuel flow between interconnected tanks (FAA policies which apply to sec. 4b.418).* If there is a possibility of flow between interconnected tanks, it should be demonstrated that this flow is not sufficient to cause fuel to overflow from the tank vents during the conditions specified in section 4b.416 (b) for the determination of unusable fuel. These maneuvers should be accompanied by side slips, skids and other uncoordinated maneuvers that might occur in normal service. The tests should be conducted with full tanks.

(19 F. R. 4464, July 20, 1954, effective Sept. 1, 1954.)

Fuel System Construction and Installation

4b.420 *General.*

(a) Fuel tanks shall be capable of withstanding without failure all vibration, inertia, fluid, and structural loads to which they may be subjected in operation.

(b) Flexible fuel tank liners shall be of an approved type or shall be shown to be suitable for the particular application.

(c) Integral type fuel tanks shall be provided with facilities for inspection and repair of the tank interior.

(d) The unusable fuel capacity shall be the minimum quantity of fuel which will permit compliance with the provisions of section 4b.416.

(e) Fuel tanks located within the fuselage contour shall be capable of resisting rupture and retaining the fuel under the inertia forces prescribed for the emergency landing conditions in section 4b.260. In addition, these tanks shall be located in a protected position so that exposure of the tanks to scraping action with the ground will be unlikely.

(f) The augmentation liquid tank capacity available for the use of each engine shall be sufficient to permit operation of the airplane in accordance with the procedures for the use of liquid augmented powers which are established and approved with respect to compliance with the related requirements of this part. The computation of liquid consumption shall be based on the maximum approved rate appropriate for the desired engine output and shall include the effect of temperature on engine performance as well as any other factors that might cause a variation in the amount of liquid required.

4b.420–1 *Minimum quantity of antidetonant fluid required (FAA policies which apply to sec. 4b.420 (e)).*

(a) *Airplanes equipped with a common tank for two engines.* The usable capacity of the tank should be sufficient for operation of the engines served by that tank for a duration equal to that determined by Case A, B, or C, whichever is applicable and results in the greater value (see table 2). The capacity should be based on the flow rate approved during engine type certification.

(1) *Case A.* Case A is intended to provide for conditions with all engines operating and, therefore, the approach climb requirement is not involved.

(2) *Case B.* Case B is intended to provide for failure of one engine during the course of a flight between takeoff and landing and may, therefore, involve the approach climb requirement but not the landing climb requirement.

(3) *Case C.* Case C provides for failure of an engine during the course of a flight between takeoff and landing on a four-engine aircraft which has two tanks; each feeding a pair of

TABLE 2. ANTI-DETONANT TANK CAPACITY

(Total for tank equals sum of totals for both engines served by tank)

	Case A		Case B		Case C	
	Engine #1	Engine #2	Engine #1	Engine #2	Engine #1	Engine #2
Takeoff	X[1]	X	X	X	X	X
Approach[2]			X		X	X
Landing[3]	X/2[4]	X/2[4]				
Reserve	X/2[1,4]	X/2[1,4]	X		X	X

[1] Wherever "X" appears in the table, it denotes a duration equal to the maximum time for which the use of wet takeoff power is used for determination of the takeoff flight path of the airplane. However, in no case should the value of either "X" or "X/2" be considered to be less than one minute.

[2] Applies as indicated by "X" only if wet takeoff power is used to demonstrate compliance with the approach climb requirement of section 4b.120 (d).

[3] Applies as indicated by "X" only if wet takeoff power is used to demonstrate compliance with the landing climb requirement of section 4b.119 (b).

[4] "X/2" is specified for the reserve in the all-engine operating case rather than "X" because this type of operation is considered less critical than operation with one engine inoperative and the reserve need not therefore be as large.

engines on one side of the airplane. The tables show the quantities required to assure an adequate supply of fluid on the side of the airplane opposite to the side on which the failure occurs since this is the critical consideration for determining the tank quantity. Both tanks on the airplane should, of course, have this capacity. For the same reason as in Case B, the landing climb is not involved for Case C, but the approach climb requirement may be involved.

(b) *Airplanes equipped with a separate tank for each engine.* The capacity of the tank should be sufficient for operation of the engine for a duration equal to the greatest value specified for engine #1 in the three cases listed in table 2. However, in no case should the quantity be less than that required for three minutes of engine operation.

(20 F. R. 2280, Apr. 8, 1955, effective Apr. 30, 1955.)

4b.421 *Fuel tank tests.*

(a) Fuel tanks shall be demonstrated by test to be capable of withstanding the more critical of the pressures resulting from the conditions of subparagraphs (1) and (2) of this paragraph without failure or leakage as mounted in the airplane. In addition, tank surfaces subjected to more critical pressures resulting from the conditions of subparagraphs (3) and (4) of this paragraph shall be demonstrated by means of either analyses or tests to be capable of withstanding such pressures.

(1) Internal pressures of 3.5 psi;

(2) 125 percent of the maximum air pressure developed in the tank from ram effect;

(3) Fluid pressures developed during maximum limit accelerations and deflections of the airplane with a full tank;

(4) Fluid pressures developed during the most adverse combination of airplane roll and fuel load.

(b) Metallic tanks with large unsupported or unstiffened flat surfaces, the failure or deformation of which could cause fuel leakage, shall be capable of withstanding a vibration test in accordance with the conditions of subparagraphs (1) through (4) of this paragraph, or other equivalent test, without leakage or excessive deformation of the tank walls.

(1) The complete tank assembly together with its supports shall be subjected to a vibration test when mounted in a manner simulating the actual installation.

(2) The tank assembly shall be vibrated for 25 hours while filled two-thirds full of water or any suitable test fluid. The amplitude of vibration shall not be less than one thirty-second of an inch, unless otherwise substantiated.

(3) The frequency of vibration shall be 90 percent of the maximum continuous rated speed of the engine unless some other frequency within the normal operating range of speeds of the engine is more critical, in which case the latter speed shall be employed and the time of test shall be adjusted to accomplish the same number of vibration cycles.

(4) During the test, the tank assembly shall be rocked at the rate of 16 to 20 complete cycles per minute through an angle of 15°

on either side of the horizontal (30° total) about the most critical axis for 25 hours. If motion about more than one axis is likely to be critical, the tank shall be rocked about each axis for 12½ hours.

(c) Nonmetallic tanks shall withstand the test specified in subparagraph (b)(4) of this section with fuel at a temperature of 110° F. except that this test shall not be required where satisfactory operating experience with a similar tank in a similar installation is shown. During the test a representative specimen of the tank shall be installed in supporting structure which simulates the installation in the airplane.

4b.422 *Fuel tank installation.*

(a) The method of support for fuel tanks shall not permit concentration of loads, resulting from the weight of the fuel in the tank, on unsupported tank surfaces. The following shall be applicable:

(1) Pads shall be provided to prevent chafing between the tank and its supports.

(2) Materials employed for padding shall be nonabsorbent or shall be treated to prevent the absorption of fluids.

(3) If flexible tank liners are employed they shall be so supported that the liner is not required to withstand fluid loads.

(4) Interior surfaces of tank compartments shall be smooth and free of projections which could cause wear of the liner, unless provisions are made for protection of the liner at such points or unless the construction of the liner itself provides such protection.

(b) Spaces adjacent to the surfaces of the tank shall be ventilated consistent with the size of the compartment to avoid fume accumulation in the case of minor leakage. If the tank is in a sealed compartment it shall be acceptable to limit the ventilation to that provided by drain holes of sufficient size to prevent excessive pressure resulting from altitude changes.

(c) Location of fuel tanks shall comply with the provisions of section 4b.481 (a).

(d) No portion of engine nacelle skin which lies immediately behind a major air egress opening from the engine compartment shall act as the wall of an integral tank.

(e) Fuel tanks shall be isolated from personnel compartments by means of fumeproof and fuelproof enclosures.

4b.423 *Fuel tank expansion space.*

(a) Fuel tanks shall be provided with an expansion space of not less than 2 percent of the tank capacity.

(b) It shall not be possible to fill the fuel tank expansion space inadvertently when the airplane is in the normal ground attitude.

4b.424 *Fuel tank sump.*

(a) Each fuel tank shall be provided with a sump having a capacity of not less than either 0.10 percent of the tank capacity or one-sixteenth of a gallon, whichever is the greater, except that a smaller capacity shall be acceptable if operating limitations are established to assure that in service the accumulation of water will not exceed the sump capacity.

(b) The fuel tank sump capacity specified in paragraph (a) of this section shall be effective with the airplane in the normal ground attitude. The fuel tank shall be constructed to permit drainage of any hazardous quantity of water from all portions of the tank to the sump when the airplane is in the ground attitude.

(c) Fuel tank sumps shall be provided with an accessible drain to permit complete drainage of the sump on the ground. The drain shall discharge clear of all portions of the airplane and shall be provided with means for positive locking of the drain in the closed position, either manually or automatically.

4b.425 *Fuel tank filler connection.*

(a) The design of fuel tank filler connections shall be such as to prevent the entrance of fuel into the fuel tank compartment or any other portion of the airplane other than the tank itself.

(b) Recessed fuel tank filler connections which retain any appreciable quantity of fuel shall incorporate a drain, and the drain shall discharge clear of all portions of the airplane.

(c) The fuel tank filler cap shall provide a fuel-tight seal.

(d) The fuel tank filler connections shall be marked as prescribed in section 4b.738 (b).

4b.426 *Fuel tank vents and carburetor vapor vents.*

(a) Fuel tanks shall be vented from the top portion of the expansion space in such a manner that venting of the tank is effective under all

normal flight conditions. The following shall be applicable:

(1) Vent outlets shall be located and constructed to prevent the possibility of being obstructed by ice or other foreign matter.

(2) The vent shall be constructed to preclude the possibility of siphoning fuel during normal operation.

(3) The vent shall be of sufficient size to prevent the existence of excessive differences of pressure between the interior and exterior of the tank during normal flight operation, during maximum rate of descent, and, if applicable, during refueling and defueling.

(4) Air spaces of tanks with interconnected outlets shall also be interconnected.

(5) There shall be no points in the vent line where moisture could accumulate with the airplane in either the ground or the level flight attitude unless drainage is provided.

(6) Vents and drainage shall not terminate at points where the discharge of fuel from the vent outlet would constitute a fire hazard or from which fumes could enter personnel compartments.

(b) Carburetors which are provided with vapor elimination connections shall be provided with a vent line to lead vapors back to one of the fuel tanks. The vents shall comply with the following:

(1) Provisions shall be incorporated in the vent system to avoid stoppage by ice.

(2) If more than one fuel tank is provided and it is necessary to use the tanks in a definite sequence, the vapor vent return line shall lead back to the fuel tank used for take-off and landing.

4b.426–1 *Determination of syphoning of fuel system vents (FAA policies which apply to sec. 4b.426).* Taxiing tests should be conducted which involve sharp turns followed by rapid acceleration into the takeoff run and other ground maneuvers to assure that fuel will not escape from, or syphon from, the tank vents; nor should syphoning occur under the flight conditions specified in the test program for section 4b.418–1. All tests should be conducted with full tanks.

(19 F. R. 4474, July 20, 1954, effective Sept. 1, 1954.)

4b.427 *Fuel tank outlet.* A fuel strainer of 8 to 16 meshes per inch shall be provided either for the fuel tank outlet or for the booster pump. Strainers shall comply with the following:

(a) The clear area of the fuel tank outlet strainer shall not be less than 5 times the area of the fuel tank outlet line.

(b) The diameter of the strainer shall not be less than the diameter of the fuel tank outlet.

(c) Finger strainers shall be accessible for inspection and cleaning.

4b.428 *Under-wing fueling provisions.* Under-wing fuel tank connections shall be provided with means to prevent the escape of hazardous quantities of fuel from the tank in the event of malfunctioning of the fuel entry valve while the cover plate is removed. In addition to the normal means provided in the airplane for limiting the tank content, a means shall be installed to prevent damage to the tank in case of failure of the normal means.

Fuel System Components

4b.430 *Fuel pumps.*

(a) *Main pumps.*

(1) Any fuel pump that is required for proper engine operation or to meet the fuel system requirements of this subpart, except for the provisions of paragraph (b) of this section, shall be considered a main pump.

(2) Provision shall be made to permit the bypass of all positive displacement fuel pumps except fuel injection pumps approved as part of the engine.

(b) Emergency pumps.

(1) Emergency pumps shall be provided and immediately available to permit supplying all engines with fuel in case of failure of any one main fuel pump except fuel injection pumps approved as part of the engine. This requirement is not intended to prohibit the use of another main pump as an emergency pump after failure of one main pump.

4b.430–1 *Fuel injection pump (FAA interpretations which apply to sec. 4b.430).* The phrase "fuel injection pump" means a pump that supplies the proper flow and pressure

conditions for fuel injection[28a] when such injection is not accomplished in a carburetor.

(23 F. R. 7482, Sept. 26, 1958, effective Oct. 20, 1958.)

4b.432 ***Fuel system lines and fittings.*** **(a) Fuel lines shall be installed and supported to prevent excessive vibration and to withstand loads due to fuel pressure and due to accelerated flight conditions.**

(b) Fuel lines which are connected to components of the airplane between which relative motion could exist shall incorporate provisions for flexibility.

(c) Flexible connections in fuel lines which may be under pressure and subjected to axial loading shall employ flexible hose assemblies rather than hose clamp connections.

(d) Flexible hose shall be of an approved type or shall be shown to be suitable for the particular application.

(e) Flexible hoses which might be adversely affected by exposure to high temperatures shall not be employed in locations where excessive temperatures will exist during operation or after engine shut-down.

4b.433 ***Fuel lines and fittings in designated fire zones.*** **Fuel lines and fittings in all designated fire zones (see sec. 4b.480) shall comply with the provisions of section 4b.483.**

4b.434 ***Fuel valves.*** **In addition to the requirements of section 4b.482 for shutoff means, all fuel valves shall be provided with positive stops or suitable index provisions in the "on" and "off" positions and shall be supported so that loads resulting from their operation or from accelerated flight conditions are not transmitted to the lines attached to the valve.**

4b.435 ***Fuel strainer or filter.*** **A fuel strainer or filter shall be provided between the fuel tank outlet and the fuel metering device of the engine. The following provisions of this section shall be complied with:**

(a) If an engine-driven fuel pump is provided, the strainer or filter shall be located between the tank outlet and the engine-driven pump inlet.

(b) The fuel strainer or filter shall be accessible for drainage and cleaning, and the strainer screen shall be easily removable.

(c) The strainer or filter shall be mounted in a manner not to cause its weight to be supported by the connecting lines or by the inlet or outlet connections of the strainer or filter itself.

(d) When strainers or filters susceptible to icing are incorporated in the fuel system, a means shall be provided to maintain automatically the fuel flow in the event ice particles accumulate and restrict flow by clogging the filter or screen.

(e) The fuel strainer or filter shall be of adequate capacity, commensurate with operating limitations established to insure proper service and of appropriate mesh to insure proper engine operation with the fuel contaminated to a degree, with respect to particle size and density, which can be reasonably expected to occur in service. The degree of fuel filtering shall be not less than that established for the engine in accordance with Part 13 of this subchapter.

4b.436 ***Fuel system drains.*** **Drainage of the system shall be accomplished by fuel strainer drains and other drains as provided in section 4b.424. The following shall apply:**

(a) Drains shall discharge clear of all portions of the airplane and shall incorporate means for positive locking of the drain in the closed position, either manually or automatically.

(b) All fuel system drains shall be accessible.

(c) If drainage of the fuel strainer permits compliance with paragraphs (a) and (b) of this section, no additional drains need be provided unless it is possible for a hazardous quantity of water or sediment to be trapped therein. (See also sec. 4b.483 (c).)

4b.437 ***Fuel jettisoning system.*** **If the maximum take-off weight for which the airplane is certificated exceeds 105 percent of the certificated maximum landing weight, provision shall be made for the jettisoning of fuel from the maximum take-off to the maximum landing weight.**

(a) The average rate of fuel jettisoning shall be 1 percent of the maximum take-off weight per minute, except that the time required to

[28a] Fuel injection is a special form of carburetion: the charging of air or gas with volatile carbon compounds. It is either an intermittent charging of air by discrete, metered quantities of fuel such as occurs on a Diesel cylinder or it is a continuous charging of air by fuel, the fuel flow being proportioned to the airflow through the engine. Examples of continuous injection are injections into the supercharger section of a reciprocating engine or into the combustion chambers of a turbine engine.

jettison the fuel need not be less than 10 minutes. Compliance with these provisions shall be shown at maximum take-off weight, with flaps and landing gear up, and in the following flight conditions:

(1) Power-off glide at a speed of 1.4 V_{s_1}.

(2) Climb at the one-engine-inoperative best rate-of-climb speed with the critical engine inoperative, the remaining engine(s) at maximum continuous power.

(3) Level flight at a speed of 1.4 V_{s_1}, if the results of tests in conditions specified in subparagraphs (1) and (2) of this paragraph indicate that this condition could be critical.

(b) During the flight tests prescribed in paragraph (a) of this section it shall be demonstrated that the fuel jettisoning system complies with the following provisions:

(1) The fuel jettisoning system and its operation shall be free of fire hazard.

(2) The fuel shall discharge clear of all portions of the airplane.

(3) Fuel or fumes shall not enter any portion of the airplane.

(4) The jettisoning operation shall not affect adversely the controllability of the airplane.

(c) The design of the jettisoning system shall be such that it would not be possible to jettison fuel in the tanks used for take-off and landing below the level providing 45 minutes flight at 75 percent maximum continuous power, except that it shall be permissible to jettison all fuel where an auxiliary control is provided independent of the main jettisoning control. For turbine-powered airplanes, the design of the jettisoning system shall be such that it would not be possible to jettison fuel in the tanks used for take-off and landing below the level providing climb from sea level to 10,000 feet and thereafter providing 45 minutes cruise at a speed for maximum range.

(d) The fuel jettisoning valve shall permit the flight personnel to close the valve during any portion of the jettisoning operation. (See sec. 4b.475 for fuel jettisoning system controls.)

(e) Unless it is demonstrated that lowering of the flaps does not adversely affect fuel jettisoning, a placard shall be provided adjacent to the jettisoning control to warn flight personnel against jettisoning fuel while the flaps are lowered. A notation to this effect shall also be included in the Airplane Flight Manual. (See sec. 4b.740.)

(f) The design of the fuel jettisoning system shall be such that any reasonably probable single malfunction in the system will not result in a hazardous condition due to unsymmetrical jettisoning or inability to jettison fuel.

4b.437–1 *Test procedure for fuel jettisoning (FAA policies which apply to sec. 4b.437).*

(a) In the case where the maximum takeoff weight exceeds 105 percent of the maximum landing weight, provisions should be available for jettisoning fuel from the maximum takeoff weight to the maximum landing weight at the corresponding altitude range of airports for which certification is sought. If the applicant has made sufficient jettisoning tests [29] to prove the safety of the jettisoning system, the tests may be made with fuel only. Otherwise, preliminary tests should be made with noninflammable fluid first and the results then checked using fuel. The following procedures and methods should be observed for demonstrating the operation of the fuel jettisoning system:

(1) *Fire hazard.*

(i) Fuel in liquid or vapor form should not impinge upon any external surface of the airplane during or after jettisoning. Colored fuel, or surfaces so treated that liquid or vaporous fuel changes the appearance of the airplane surface may be used for detection purposes. Other equivalent methods for detection may be acceptable.

(ii) Fuel in liquid or vapor form should not enter any portion of the airplane during or after jettisoning. The fuel may be detected by its scent, combustible mixture detector or by visual inspection. In supercharged aircraft the presence of liquid or vaporous fuel should be checked with the airplane unpressurized.

(iii) There should be no evidence of fuel valve leakage after it is closed.

(iv) If there is any evidence that wing flap positions, other than that used or the test may adversely affect the flow pattern, the airplane should be placarded "Fuel should not be jettisoned except when flaps are set at —°."

[29] The basic purpose of these tests is to determine that the required amount of fuel may be safely jettisoned under reasonably anticipated operating conditions within the prescribed time limit without danger from fire, explosion, or adverse effects on the flying qualities.

(v) The applicant should select for demonstration the tanks or tank combinations which are critical for demonstrating the flow rate during jettisoning.

(vi) Fuel jettisoning flow pattern should be demonstrated from all normally used tank or tank combinations on both sides of airplane whether or not both sides are symmetrical.

(vii) Fuel jettisoning rate may be demonstrated from only one side of symmetrical tank or tank combinations which are critical for flow rate.

(viii) Fuel jettisoning rate and flow pattern should be demonstrated when jettisoning from full tanks using fuel.

(2) *Control.*

(i) Changes in the airplane control qualities during the fuel jettisoning tests should be noted.

(ii) Discontinuance of fuel jettisoning should be demonstrated in flight.

(3) *Residual fuel.* The residual fuel should be measured by draining the tanks from which fuel has been jettisoned in flight, measuring the total drained fuel and subtracting from the total the unusable fuel quantity for each tank to determine if there is sufficient reserve fuel after jettisoning to meet section 4b.437. This may be a ground test.

(b) *Configuration.* Fuel jettisoning tests should be conducted in the configurations that follow:

(1) *Glide.*

Weight—maximum takeoff.
C. G. position—optional.
Wing flaps—retracted or in a position desired for approval.
Landing gear—retracted or extended as desired by applicant.
Engines—poweroff, propellers windmilling.
Cowl flaps—optional.
Airspeed—1.4 V_{s_1}.

(2) *Climb.*

Weight—maximum takeoff.
C. G. position—optional.
Wing flaps—retracted or in a position desired for approval.
Landing gear—retracted or extended.
Operating engine(s)—maximum continuous power, cowl flaps optional.
Critical inoperative engine—throttle closed on engine most critical for fuel flow pattern, propeller feathered, cowl flaps closed.
Airspeed—one engine inoperative best rate of climb speed.

(3) *Level flight.*

Weight—maximum takeoff.
C. G. position—optional.
Wing flaps—retracted or in a position desired for approval.
Landing gear—retracted or extended.
Engines—power required for airspeed of 1.4 V_{s_1}.
Cowl flaps—optional.

(c) *Test procedure and required data.* When the airplane is trimmed in the configuration specified in items (b) (1) and (b) (2), the jettisoning valves should be opened and allowed to remain open until all jettisoning liquid has been disposed. If the configuration of (b) (3) is critical, tests should also be conducted for this condition. This procedure may be carried out in segments if desired. The following data should be recorded:

Time to jettison fuel.
Fuel gauge quantity at reasonable time intervals.
Pressure altitude.
Ambient air temperature.
Indicated airspeed.
Engines, r. p. m. and manifold pressure.
Carburetor air temperature.

(19 F. R. 4464, July 20, 1954, effective Sept. 1, 1954.)

Oil System

4b.440 *General.*

(a) Each engine shall be provided with an independent oil system capable of supplying the engine with an appropriate quantity of oil at a temperature not exceeding the maximum which has been established as safe for continuous operation. (For oil system instruments see secs. 4b.604 and 4b.735.)

(b) The oil tank capacity available for the use of the engine shall not be less than the product of the endurance of the airplane under critical operating conditions times the approved maximum permissible oil consumption rate of the engine under the same conditions, plus a suitable margin to assure system circulation.

In lieu of a rational analysis of airplane range for reciprocating engines, a fuel-oil ratio of 30:1 by volume shall be acceptable for airplanes not provided with a reserve or transfer system.

(c) If either an oil transfer system or a reserve oil system is provided for reciprocating engines, the total oil capacity need not exceed one gallon for each 40 gallons of fuel capacity.

(d) Oil-fuel ratios lower than those prescribed in paragraphs (b) and (c) of this section shall be acceptable if substantiated by data on the actual oil consumption of the engine.

(e) The ability of the oil cooling provisions to maintain the oil inlet temperature to the engine at or below the maximum established value shall be demonstrated in accordance with pertinent provisions of sections 4b.450 through 4b.454.

4b.440–1 *Procedure for demonstrating oil cooling (FAA policies which apply to sec. 4b.440 (e)).* Procedures for conducting cooling tests are those outlined in sections 4b.452–1 and 4b.453–1.

(19 F. R. 4464, July 20, 1954, effective Sept. 1, 1954.)

4b.441 *Oil tank construction.* The following requirements shall apply to the construction of the oil tank:

(a) ***Oil tank expansion space.***

(1) Oil tanks shall have an expansion space of not less than either 10 percent of the tank capacity or 0.5 gallon, whichever is the greater.

(2) Reserve oil tanks which have no direct connection to any engine shall have an expansion space which is not less than 2 percent of the tank capacity.

(3) It shall not be possible to fill the oil tank expansion space inadvertently when the airplane is in the normal ground attitude.

(b) ***Oil tank filler connection.***

(1) Recessed oil tank filler connections which retain any appreciable quantity of oil shall incorporate a drain, and the drain shall discharge clear of all portions of the airplane.

(2) The oil tank filler cap shall provide an oil-tight seal.

(3) Oil tank filler connections shall be marked as prescribed in section 4b.738 (b).

(c) ***Oil tank vent.***

(1) Oil tanks shall be vented from the top portion of the expansion space in such a manner that venting of the tank is effective under all normal flight conditions.

(2) Oil tank vents shall be arranged so that condensation of water vapor which might freeze and obstruct the line cannot accumulate at any point. (See also section 4b.483 (c).)

(d) ***Oil tank outlet.*** Provision shall be made either to prevent entrance into the tank itself or into the tank outlet of any foreign object which might obstruct the flow of oil through the system. The oil tank outlet shall not be enclosed by any screen or guard which would reduce the flow of oil below a safe value at any operating temperature condition.

(e) ***Flexible oil tank liners.*** Flexible oil tank liners shall be of an approved type or shall be shown to be suitable for the particular application.

4b.442 *Oil tank tests.*

(a) Oil tanks shall be capable of withstanding without failure all vibration, inertia, and fluid loads to which they would be subjected in operation.

(b) The provisions of section 4b.421 shall be applicable to oil tanks, except as follows:

(1) The test pressure specified in section 4b.421 (a) shall be 5 p. s. i.

(2) The test fluid specified in section 4b.421 (c) shall be oil at a temperature of 250° F.

4b.443 *Oil tank installation.* The oil tank installation shall comply with the provisions of section 4b.422, except that the location of an engine oil tank in a designated fire zone shall be acceptable if the tank and its supports are of fireproof construction to the extent that damage by fire to any nonfireproof parts would not result in leakage or spillage of oil.

4b.444 *Oil lines and fittings.*

(a) ***General.*** The provisions of section 4b.432 shall be applicable to oil lines.

(b) ***Lines and fittings in designated fire zones.*** Oil lines and fittings in all designated fire zones (see sec. 4b.480) shall comply with the provisions of section 4b.483.

(c) ***Engine breather lines.***

(1) Engine breather lines shall be arranged so that condensation of water vapor which might freeze and obstruct the line cannot accumulate at any point.

(2) Breathers shall discharge in a location which will not constitute a fire hazard in case foaming occurs and in a manner so that the emitted oil will not impinge upon the pilot windshield.

(3) The breather shall not discharge into the engine air induction system. (See also sec. 4b.483 (c).)

4b.445 *Oil valves.*

(a) The requirements of section 4b.482 for shut-off means shall be complied with. Closing of oil shut-off means shall not prevent feathering the propeller.

(b) All oil valves shall be provided with positive stops or suitable index provisions in the "on" and "off" positions, and they shall be supported so that loads resulting from their operation or from accelerated flight conditions are not transmitted to the lines attached to the valve.

4b.446 *Oil radiators.*

(a) Oil radiators shall be capable of withstanding without failure all vibration, inertia, and oil pressure loads to which they would be subjected in operation.

(b) Oil radiator air ducts shall be located so that, in case of fire, flames issuing from normal openings of the engine nacelle cannot impinge directly upon the radiator.

4b.447 *Oil filters.* If the airplane is equipped with an oil filter, the filter shall be constructed or installed in such a manner that complete blocking of the flow through the filter element will not prevent the safe operation of the engine oil supply system.

4b.448 *Oil system drains.* Accessible drains shall be provided to permit safe drainage of the entire oil system and shall incorporate means for the positive locking of the drain in the closed position, either manually or automatically. (See also sec. 4b.483 (c).)

4b.449 *Propeller feathering system.*

(a) If the propeller feathering system is dependent upon the use of the engine oil supply, provision shall be made to trap a quantity of oil in the tank in case the supply becomes depleted due to failure of any portion of the lubricating system other than the tank itself.

(b) The quantity of trapped oil shall be sufficient to accomplish the feathering operation and shall be available only to the feathering pump.

(c) The ability of the system to accomplish feathering with the trapped supply of oil shall be demonstrated. It shall be acceptable to make this demonstration on the ground.

4b.449–1 *Procedure for demonstrating propeller feathering (FAA policies which apply to sec. 4b.449).* Tests should be conducted to demonstrate that the oil reserve for propeller feathering is adequate to accomplish the feathering procedure. This may be done on the ground by using an auxiliary source of oil for lubricating the engine during its operation.

(19 F. R. 4464, July 20, 1954, effective Sept. 1, 1954.)

Cooling System

4b.450 *General.* The powerplant cooling provisions shall be capable of maintaining the temperatures of major powerplant components, engine fluids, and the carburetor intake air within the established safe values under all conditions of ground and flight operation. (For cooling system instruments see secs. 4b.604 and 4b.734.)

4b.450–1 *Cooling with reverse thrust (FAA policies which apply to sec. 4b.450).* The policies outlined in section 4b.402–1 (j) will apply.

(20 F. R. Apr. 8, 1955, effective Apr. 30, 1955.)

4b.451 *Cooling tests.*

(a) *General.* Compliance with the provisions of section 4b.450 shall be demonstrated under critical ground, water, and flight operating conditions. If the tests are conducted under conditions which deviate from the maximum anticipated air temperature (see paragraph (b) of this section), the recorded powerplant temperatures shall be corrected in accordance with the provisions of paragraphs (c) and (d) of this section. The corrected temperatures determined in this manner shall not exceed the maximum established safe values. The fuel used during the cooling tests shall be of the minimum octane number approved for the engines involved, and the mixture settings shall be those used in normal operation. The test procedures shall be as outlined in sections 4b.452 through 4b.454.

(b) *Maximum anticipated air temperature.* The maximum anticipated air temperature (hot day condition) shall be 100° F. at sea level, decreasing from this value at the rate of 3.6° F. per thousand feet of altitude above sea level until a temperature of −67° F. is reached above which altitude the temperature shall be constant at −67° F.

(c) *Correction factor for cylinder head, oil inlet, and carburetor air temperatures.* The cylinder head, oil inlet, and carburetor air temperatures shall be corrected by adding the difference between the maximum anticipated air temperature and the temperature of the ambient air at the time of the first occurrence of maximum head, oil, or air temperature recorded during the cooling test, unless a more rational correction is shown to be applicable.

(d) *Correction factor for cylinder barrel temperatures.* Cylinder barrel temperatures shall be corrected by adding 0.7 of the difference between the maximum anticipated air temperature and the temperature of the ambient air at the time of the first occurrence of the maximum cylinder barrel temperature recorded during the cooling test, unless a more rational correction is shown to be applicable.

4b.452 *Climb cooling test procedure.*

(a) The climb cooling test shall be conducted with the critical engine inoperative and its propeller feathered.

(b) All remaining engines shall be operated at their maximum continuous power or at full throttle when above the critical altitude.

(c) After stabilizing temperatures in flight, the climb shall be started at or below the lower of the two following altitudes and shall be continued until at least 5 minutes after the occurrence of the highest temperature recorded, or until the maximum altitude is reached for which certification is desired:

(1) 1,000 feet below the engine critical altitude,

(2) 1,000 feet below the maximum altitude at which the rate of climb is equal to that established in accordance with section 4b.120 (c).

(d) The climb shall be conducted at an air speed which does not exceed the speed used in establishing the rate of climb required in section 4b.120 (c). It shall be acceptable to conduct the climb cooling test in conjunction with the take-off cooling test of section 4b.453.

4b.452–1 *Procedure for demonstrating cooling climb (FAA policies which apply to sec. 4b.452).*

(a) If the applicant is not able to provide data for the location of the engine having the hottest cylinder heads and bases, the following procedure should be accomplished. The cylinder heads and bases on one engine should be fully instrumented for the purpose of determining the location of the hottest cylinder head and base to be checked during the cooling climb. Thermocouples should be installed on one head of each of the remaining engines at the location shown to be critical on the fully instrumented engine. The hottest of the critical cylinder heads may be determined by measuring the temperatures of each of the engines under simulated climb conditions. The engine having the hottest cylinder head should be chosen as the engine to be tested for the cooling demonstration. Instruments for determining the oil inlet and cylinder base temperatures should be installed on this engine. The cooler operating outboard engine should be considered to be the critical inoperative engine unless there is reason to believe that another engine is more critical. The cooling tests should be conducted in an atmosphere which is free of any visible moisture.

(b) *Configuration.* This test should be conducted in the configuration that follows:

Weight—maximum takeoff.
C. G. position—optional.
Wing flaps—optional.
Landing gear—optional.
Operating engine(s)—maximum continuous power, mixture setting the same as used in normal operation and cooling controls in FAA hot day cooling position.
Critical inoperative engine—throttle closed on cooler operating outboard engine, propeller feathered and cowl flaps closed.

(c) *Test procedure and required data.*

(1) Prior to commencing the cooling climb, the engine temperatures should be stabilized in level flight at the lower of the two altitudes specified in section 4b.452 (c). During level flight the cooling climb conditions should be simulated by adjusting the airplane configuration to that shown in (b) and maintaining the

necessary power on the operating engine(s) to obtain the speed specified in section 4b.452 (d).

(2) When the temperatures have stabilized, i. e., the rate of temperature change is less than 2° F. per minute, the propeller on the inoperative engine should be feathered and the cooling climb commenced at maximum continuous power and at the specified configuration and speed. The climb should be continued for five minutes after occurrence of the highest temperature or until the maximum altitude desired for certification is reached.

(3) The above procedure should be repeated when demonstrating engine cooling for high blower except that temperatures should be stabilized in level flight with simulated climb conditions at an altitude of 1,000 feet below the critical altitude established for the high blower. The weight of the airplane should be such that it will permit a rate of climb equal to that specified in section 4b.120 (c).

(4) The following data should be recorded at no greater than one minute intervals:

Pressure altitude.
Ambient air temperature.
Engines, r. p. m. and manifold pressure.
Carburetor air temperature.
Indicated airspeed.
Hottest cylinder head temperature.
Hottest cylinder base temperature.
Oil inlet temperature.
Coolant temperature.
Fuel flow.

(5) In addition a record should be made of the mixture setting, blower setting, cooling control settings, and fuel grade.

4b.453 *Take-off cooling test procedure.* A take-off cooling test shall be conducted to demonstrate cooling during take-off and during subsequent climb with one engine inoperative. The following procedure shall be applicable:

(a) The take-off cooling test shall be commenced by stabilizing temperatures during level flight with all engines operating at 75 percent of maximum continuous power with the appropriate cowl flap and shutter settings.

(b) After all temperatures have stabilized, the climb shall be started at the lowest practicable altitude and shall be conducted with one engine inoperative and its propeller feathered.

(c) The remaining engines shall be operated at take-off rpm and power (or at full throttle when above the take-off critical altitude) for the same time interval as take-off power is used during determination of the take-off flight path (see sec. 4b.116).

(d) At the end of the time interval prescribed in paragraph (c) of this section the power shall be reduced to the maximum continuous power and the climb continued until at least 5 minutes after the occurrence of the highest temperature recorded.

(e) The speed used during take-off power operation (paragraph (c) of this section) shall not exceed the speed used during determination of the take-off flight path (see sec. 4b.116).

4b.453–1 *Procedure for demonstrating takeoff cooling (FAA policies which apply to sec. 4b.453).*

(a) *Configuration.* This test should be conducted in the configuration that follows:

Weight—maximum takeoff.
C. G. position—optional.
Wing flaps—takeoff position.
Landing gear—optional.
Operating engine(s)—takeoff r. p. m. or full throttle, mixture setting at takeoff and cooling controls in takeoff position.
Critical inoperative engine—throttle closed on cooler operating outboard engine (see sec. 4b.452–1 (a)), propeller feathered and cowl flaps in optional position.

(b) *Test procedure and required data.* The temperature should be permitted to stabilize during level flight at the lowest practical altitude using 75 percent maximum continuous power on all engines and normal takeoff cowl flap or coolant door setting. After the temperatures have stabilized, the configuration of the airplane should be adjusted as specified in (a) of this section and the climb commenced at the speed and continued for the same time interval as takeoff power is used during determination of the takeoff flight path (sec. 4b.116). At the end of the takeoff power time limit, the power should be reduced to maximum continuous. After power has been reduced, the configuration may be adjusted to the en route condition specified in section 4b.452–1 (b) and the airplane accelerated to the en route climb speed specified in section 4b.452 (d). The cooling climb should be continued for five minutes after the occurrence of the highest temperature. The

same data as outlined in section 4b.452–1 (c) (4) and (5) should be recorded.

4b.454 *Cooling test procedure for flying boat operation.* In the case of flying boats, cooling shall be demonstrated during taxiing down wind for 10 minutes at 5 mph above the step speed.

4b.454–1 *Procedure for demonstrating cooling for seaplanes during water taxiing operations (FAA policies which apply to sec. 4b.454).*

(a) The cooling test for seaplanes should be conducted while taxiing on water. The tank system should contain fuel of the minimum grade approved for the engine installed. Cylinder and oil inlet temperatures should be permitted to stabilize in flight or by taxiing at reduced speed. The test should be conducted in an atmosphere which is free of visible moisture.

(b) *Configuration.* This test should be conducted in the configuration that follows:

Weight—maximum takeoff.
C. G. position—optional.
Wing flaps—optional.
Engines—sufficient power for airspeed required in (c).
Cooling controls—takeoff position.
Mixture setting—normal position for taxiing.

(c) *Test procedure and required data.* After temperatures have stabilized, the seaplane should be taxied down wind for at least 10 minutes at a speed which is not more than 5 m. p. h. above the step speed. The same data as outlined in section 4b.452–1 (c) (4) and (5) should be recorded.

(19 F. R. 4465, July 20, 1954, effective Sept. 1, 1954.)

4b.455 *Cooling of turbine engine installations.* For turbine engine installations, tests shall be conducted to demonstrate that all powerplant components for which temperature limits have been established are cooled within those limits.

Induction and Exhaust Systems

4b.460 *General.*

(a) The engine air induction system shall permit supplying the proper quantity of air to the engine under all conditions of operation.

(b) The induction system shall provide air for proper fuel metering and mixture distribution with the induction system valves in any position.

(c) Each reciprocating engine shall be provided with an alternate air source.

(d) Air intakes shall not open within the cowling, unless that portion of the cowling is isolated from the engine accessory section by means of a fireproof diaphragm, or unless provision is made to prevent the emergence of backfire flames.

(e) Alternate air intakes shall be so located as to preclude the entrance of rain, ice, or any other foreign matter.

(f) For turbine-engine-powered airplanes, provisions shall be made to prevent hazardous quantities of fuel leakage or overflow from drains, vents, or other components of flammable fluid systems to enter the engine intake system.

(g) For turbine engines, the air inlet ducts shall be so located or protected as to minimize the ingestion of foreign matter during take-off, landing, or taxying.

4b.461 *Induction system de-icing and anti-icing provisions.*

(a) *General.* The engine air induction system shall incorporate means for the prevention and elimination of ice accumulations.

(b) *Heat Rise.* Unless it is demonstrated that other means will accomplish the intent of paragraph (a) of this section, compliance with the following heat-rise provisions shall be demonstrated in air free of visible moisture at a temperature of 30° F.

(1) Airplanes equipped with altitude engines employing conventional venturi carburetors shall have a preheater capable of providing a heat rise of 120° F. when the engine is operating at 60 percent of its maximum continuous power.

(2) Airplanes equipped with altitude engines employing carburetors which embody features tending to reduce the possibility of ice formation shall have a preheater capable of providing a heat rise of 100° F. when the engine is operating at 60 percent of its maximum continuous power.

(c) *Turbine powerplants.* Turbine-powered airplanes shall be capable of operation throughout the flight power range without accumulation of ice in the air induction system such

542115 O—60——11

as to adversely affect engine operation or cause a serious loss of power and/or thrust in the continuous maximum and intermittent maximum icing conditions as defined in section 4b.1 (b) (7) and (8). Means to indicate the functioning of the powerplant ice protection system shall be provided.

4b.461–1 *Procedure for demonstrating carburetor air heat rise (FAA policies which apply to sec. 4b.461 (b)).*

(a) The carburetor air temperature should be measured by a minimum of three thermocouples so arranged as to give an average air temperature. This indicator should be calibrated prior to the test. The tests should be conducted at an altitude where the free air temperature is 30° F. or at two altitudes of different temperatures, one of which is near 30° F.

(b) *Configuration.* This test should be conducted in the configuration that follows:

Weight—optional.
C. G. position—optional.
Wing flaps—optional.
Landing gear—optional.
Engines—60 percent maximum continuous power.
Cowl flaps—appropriate for flight condition.
Mixture setting—normal cruising position.

(c) *Test procedure and required data.*

(1) After all temperatures have stabilized (i. e., when the rate of temperature change is less than 2° F. per minute) and with the airplane in level flight and full cold carburetor at 60 percent maximum continuous power, the following data should be recorded:

Pressure altitude.
Ambient air temperature.
Indicated airspeed.
Carburetor air temperature.
Engines, r. p. m. and manifold pressure.
Torque pressure.
Mixture setting.
Cowl flap setting.

(2) Preheat should then be applied slowly (power may be restored to 60 percent maximum continuous at the applicant's option) and the above data recorded again after the carburetor air temperature has stabilized. The carburetor heat rise should be determined from the results of the data.

19 F. R. 4465, July 20, 1954, effective Sept. 1, 1954; amended 22 F. R. 6963, Aug. 29, 1957, effective Sept. 15, 1957.)

4b.462 *Carburetor air preheater design.* Carburetor air preheaters shall incorporate the following provisions:

(a) Means shall be provided to assure ventilation of the preheater when the engine is being operated with cold air.

(b) The preheater shall be constructed to permit inspection of exhaust manifold parts which it surrounds and also to permit inspection of critical portions of the preheater itself.

4b.463 *Induction system ducts.* Induction system ducts shall incorporate the following provisions:

(a) Induction system ducts ahead of the first stage of the supercharger shall be provided with drains to prevent hazardous accumulations of fuel and moisture in the ground attitude. The drains shall not discharge in locations which might cause a fire hazard.

(b) Sufficient strength shall be incorporated in the ducts to prevent induction system failures resulting from normal backfire conditions.

(c) Ducts which are connected to components of the airplane between which relative motion could exist shall incoporate provisions for flexibility.

(d) Induction system ducts within any fire zone for which a fire-extinguishing system is required shall be of fire-resistant construction.

4b.464 *Induction system screens.* If induction system screens are employed, they shall comply with the following provisions:

(a) Screens shall be located upstream from the carburetor.

(b) Screens shall not be located in portions of the induction system which constitute the only passage through which air can reach the engine, unless the screen is so located that it can be de-iced by heated air.

(c) De-icing of induction system screens by means of alcohol alone shall not be acceptable.

(d) It shall not be possible for fuel to impinge upon the screens.

4b.465 *Carburetor air cooling.* Installations employing two-stage superchargers shall be provided with means to maintain the air

temperature at the inlet to the carburetor at or below the maximum established value. The demonstration of this provision shall be accomplished in accordance with section 4b.451.

4b.465–1 *Procedure for demonstrating carburetor air cooling (FAA policies which apply to sec. 4b.465).* Carburetor air cooling should be demonstrated in conjunction with the tests required by sections 4b.452 and 4b.453.

(19 F. R. 4465, July 20, 1954, effective Sept. 1, 1954.)

4b.466 *Inter-coolers and after-coolers.* Inter-coolers and after-coolers shall be capable of withstanding without failure all vibration, inertia, and air pressure loads to which they would be subjected in operation.

4b.467 *Exhaust system and installation components.*

(a) *General.*

(1) The exhaust system shall be constructed and arranged to assure the safe disposal of exhaust gases without the existence of a fire hazard or carbon monoxide contamination of air in personnel compartments.

(2) Unless appropriate precautions are taken, exhaust system parts shall not be located in hazardous proximity to portions of any system carrying flammable fluids or vapors nor shall they be located under portions of such systems where the latter could be subject to leakage.

(3) All airplane components upon which hot exhaust gases might impinge, or which could be subjected to high temperatures due to proximity to exhaust system parts, shall be constructed of fireproof material. All exhaust system components shall be separated by means of fireproof shields from adjacent portions of the airplane which are outside the engine compartment.

(4) Exhaust gases shall not discharge in a manner to cause a fire hazard with respect to any flammable fluid vent or drain.

(5) Exhaust gases shall not discharge at a location which will cause a glare seriously affecting pilot visibility at night.

(6) All exhaust system components shall be ventilated to prevent the existence of points of excessively high temperature.

(7) Exhaust shrouds shall be ventilated or insulated to avoid during normal operation a temperature sufficiently high to ignite any flammable fluids or vapors external to the shrouds.

(b) *Exhaust piping.*

(1) Exhaust piping shall be constructed of material resistant to heat and corrosion, and shall incorporate provisions to prevent failure due to expansion when heated to operating temperatures.

(2) Exhaust pipe shall be supported to withstand all vibration and inertia loads to which they would be subjected in operation.

(3) Portions of the exhaust piping which are connected to components between which relative motion could exist shall incorporate provisions for flexibility.

(c) *Exhaust heat exchangers.*

(1) Exhaust heat exchangers shall be constructed and installed to assure their ability to withstand without failure all vibration, inertia, and other loads to which they would be subjected in operation.

(2) Heat exchangers shall be constructed of materials which are suitable for continued operation at high temperatures and which are resistant to corrosion due to elements contained in exhaust gases.

(3) Provision shall be made for the inspection of all critical portions of exhaust heat exchangers.

(4) Heat exchangers shall incorporate cooling provisions wherever they are subject to contact with exhaust gases.

(5) Heat exchangers or muffs shall incorporate no stagnant areas or liquid traps which would increase the possibility of ignition of flammable fluids or vapors which might be present in case of failure or malfunctioning of components carrying flammable fluids.

(d) *Exhaust heating of ventilating air.* If an exhaust heat exchanger is used for heating ventilating air, a secondary heat exchanger shall be provided between the primary exhaust gas heat exchanger and the ventilating air system, unless it is demonstrated that other means used preclude harmful contamination of the ventilating air.

(e) *Exhaust driven turbo-superchargers.*

(1) Exhaust driven turbines shall be of an approved type or shall be shown to be suitable for the particular application. They shall be

installed and supported to assure their safe operation between normal inspection and overhaul periods.

(2) Provision for expansion and flexibility shall be made between exhaust conduits and the turbine.

(3) Provision shall be made for lubrication of the turbine and for cooling of those turbine parts where the temperatures are critical.

(4) Means shall be provided so that, in the event of malfunctioning of the normal turbo-supercharger control system, the turbine speed will not be greater than its maximum allowable value. The components provided for this purpose shall be independent of the normal turbo-supercharger controls with the exception of the waste gate operating components themselves.

4b.467–1 *Carbon monoxide detection (FAA policies which apply to sec. 4b.467 (a) (1) and (d)).*

(a) Any acceptable carbon monoxide detection method may be used in demonstrating compliance with section 4b.467 (a) (1) and (d), and with the ventilating requirements of section 4b.371. The tests should be conducted with the airplane's heater system in operation if there is any possibility of a system containing carbon monoxide. In aircraft employing thermal de-icing, tests should be conducted with the system operating at full capacity.

(b) *Configuration.* Carbon monoxide tests should be conducted in the configurations that follow:

(1) *Power-on level flight.*
Weight—optional.
C. G. position—optional.
Wing flaps—retracted.
Landing gear—retracted.
Engines—maximum continuous power.
Cowl flaps—appropriate for flight condition.

(2) *Power-off glide.*
Wing flaps—retracted.
Landing gear—retracted.
Engines—idling.
Cowl flaps—appropriate for flight condition.

(3) *Power approach.*
Wing flaps—approach position.
Landing gear—extended.
Engines—power for level flight.
Cowl flaps—appropriate for flight condition.
Airspeed—any speed from 1.4 V_{s_1} to 1.6 V_{s_1}.

(c) *Test procedure and required data.* The air should be sampled with a carbon monoxide indicator in front of cabin heater opening(s) with heat on and at representative passenger and crew locations. If the airplane does not have pressurization equipment installed, the air should be sampled at the above locations with the windows closed and also partially opened. If the airplane is equipped for pressurization, carbon monoxide indications should be taken when the cabin is pressurized and also unpressurized.

(19 F. R. 4465, July 20, 1954, effective Sept. 1, 1954.)

4b.467–2 *Determination of exhaust gas interference with visibility (FAA policies which apply to sec. 4b.467 (a) (5)).* The effects of exhaust gas interference with visibility should be observed during tests to demonstrate other night flying requirements.

(19 F. R. 4466, July 20, 1954, effective Sept. 1, 1954.)

Powerplant Controls and Accessories

4b.470 *Powerplant controls; general.*

The provisions of section 4b.353 shall be applicable to all powerplant controls with respect to location, grouping, and direction of motion, and the provisions of section 4b.737 shall be applicable to all powerplant controls with respect to marking. In addition all powerplant controls shall comply with the following:

(a) Controls shall be so located that they cannot be inadvertently operated by personnel entering, leaving, or making normal movements in the cockpit.

(b) Controls shall maintain any set position without constant attention by flight personnel. They shall not tend to creep due to control loads or vibration.

(c) Flexible controls shall be of an approved type or shall be shown to be suitable for the particular application.

(d) Controls shall have strength and rigidity to withstand operating loads without failure and without excessive deflection.

4b.471 *Throttle and A. D. I. system controls.*

(a) A separate throttle control shall be provided for each engine. Throttle controls shall be grouped and arranged to permit separate control of each engine and also simultaneous control of all engines.

(b) Throttle controls shall afford a positive and immediately responsive means of controlling the engines.

(c) If an antidetonant injection system is provided, the flow of ADI fluid shall be automatically controlled in relation to the amount of power produced by the engine. In addition to the automatic control, a separate control shall be provided for the ADI pumps.

4b.472 *Ignition switches.*

(a) Ignition switches shall provide control for each ignition circuit on each engine.

(b) Means shall be provided for quickly shutting off all ignition by the grouping of switches or by providing a master ignition control.

(c) If a master ignition control is provided, a guard shall be incorporated to prevent inadvertent operation of the control.

4b.473 *Mixture controls.*

(a) If mixture controls are provided, a separate control shall be provided for each engine. The mixture controls shall be grouped and arranged to permit separate control of each engine and also simultaneous control of all engines.

(b) Any intermediate position of the mixture control which corresponds with a normal operating setting shall be provided with a sensory and a visual identification.

(c) The mixture controls shall be placed in a location accessible to both pilots, except where a separate flight engineer station with a control panel is provided, in which case the mixture controls shall be accessible to the flight engineer.

4b.474 *Propeller controls.*

(a) *Propeller speed and pitch controls.*

(1) A separate propeller speed and pitch control shall be provided for each propeller. The propeller speed and pitch controls shall be grouped and arranged to permit separate control of each propeller and also simultaneous control of all propellers.

(2) The propeller speed and pitch controls shall provide for synchronization of all propellers. (See also sec. 4b.404.)

(3) Propeller speed and pitch control(s) shall be placed to the right of the pilot's throttle and shall be at least 1 inch lower than the throttle controls.

(b) *Propeller feathering controls.*

(1) A separate propeller feathering control shall be provided for each propeller.

(2) Propeller feathering controls shall be provided with means to prevent inadvertent operation.

(3) If feathering is accomplished by movement of the propeller pitch or speed control lever, provision shall be made to prevent the movement of this control to the feathering position during normal operation.

4b.474–1 *Propeller feathering pump motors, intermittent duty type (FAA policies which apply to sec. 4b.474 (b)).*

(a) An intermittent duty type motor [30] in the propeller feathering control system should automatically stop or be made to stop upon the completion of the feathering operation by any of the following means:

(1) Installation of a pressure cutout switch in the feathering button holding coil circuit.

(2) Installation of a timer switch in the feathering button holding coil circuit.

(3) Manually interrupting the feathering pump circuit by pulling out the feathering button. In this arrangement, a warning light should be installed in the pump circuit to illuminate while the pump motor is operating. The light may be either in the feathering button or adjacent to it.

(b) Timer switches of either the mechanical or the thermal types are acceptable.

(22 F. R. 6885, Aug. 27, 1957, effective Sept. 15, 1957.)

4b.474a *Reverse thrust controls.*

(a) Propeller reverse thrust controls shall incorporate a means to prevent their inadvertent movement to a reverse thrust position. The means provided shall incorporate a positive lock or stop at the flight idle position and shall require a separate and distinct operation by the

[30] Intermittent duty type motors may fail if operated continuously for more than two minutes.

crew in order to displace the control from the flight regime.

(b) Turbo-jet reverse thrust controls shall incorporate a means to prevent their inadvertent movement to a reverse thrust position. The means provided shall incorporate a positive lock or stop at the flight idle position and shall require a separate and distinct operation by the crew in order to displace the control from the forward thrust regime.

4b.475 *Fuel system controls.* (See also sec. 4b.434.)

(a) Fuel jettisoning system controls shall be provided with guards to prevent their inadvertent operation.

(b) Fuel jettisoning system controls shall not be located in close proximity to fire extinguisher controls nor to any other controls intended to combat fire.

4b.476 *Carburetor air preheat controls.* Separate carburetor air preheat controls shall be provided to regulate the temperature of the carburetor air for each engine.

4b.476a *Supercharger controls.* Supercharger controls shall be accessible to the pilots, except where a separate flight engineer station with a control panel is provided, in which case they shall be accessible to the flight engineer.

4b.477 *Powerplant accessories.*

(a) Engine mounted accessories shall be of a type approved for installation on the engine involved, and shall utilize the provisions made on the engine for mounting.

(b) Items of electrical equipment subject to arcing or sparking shall be installed to minimize the possibility of their contact with any flammable fluids or vapors which might be present in a free state.

(c) If continued rotation of an engine-driven cabin supercharger or any remote accessory driven by the engine will constitute a hazard in case malfunctioning occurs, means shall be provided to prevent hazardous rotation of such accessory without interfering with the continued operation of the engine. (See also sec. 4b.371 (c).)

NOTE: Hazardous rotation may involve consideration of mechanical damage or sustained air flows which may be dangerous under certain conditions.

4b.478 *Engine ignition systems.*

(a) Battery ignition systems shall be supplemented with a generator which is automatically made available as an alternate source of electrical energy to permit continued engine operation in the event of the depletion of any battery.

(b) The capacity of batteries and generators shall be sufficient to meet the simultaneous demands of the engine ignition system and the greatest demands of any airplane electrical system components which would draw electrical energy from the same source.

(1) The design of the engine ignition system shall take into consideration the condition of an inoperative generator and the condition of a completely depleted battery when the generator is running at its normal operating speed.

(2) If only one battery is provided the design of the engine ignition system shall take into consideration the condition in which the battery is completely depleted and the generator is operating at idling speed.

(3) Portions of magneto ground wires for separate ignition circuits which lie on the engine side of the fire wall shall be installed, located, or protected so as to minimize the possibility of simultaneous failure of two or more wires as a result of mechanical damage, electrical faults, etc.

(4) Ground wires for any engine shall not be routed through fire zones, except those associated with the engine which the wires serve, unless those portions of the wires which are located in such fire zones are fireproof or are protected against the possibility of damage by fire in a manner to render them fireproof. (See sec. 4b.472 for ignition switches.)

(5) Ignition circuits shall be electrically independent of all other electrical circuits except circuits used for analyzing the operation of the ignition system.

(c) Means shall be provided to warn flight personnel if malfunctioning of any part of the electrical system is causing the continuous discharging of a battery which is necessary for engine ignition. (See sec. 4b.472 for ignition switches.)

Powerplant Fire Protection

4b.480 *Designated fire zones.*

(a) Designated fire zones shall comprise the following regions:

(1) Engine power section,

(2) Engine accessory section,

(3) Complete powerplant compartments in which no isolation is provided between the engine power section and the engine accessory section,

(4) Auxiliary power unit compartments,

(5) Fuel-burning heaters and other combustion equipment installations as defined by section 4b.386.

(6) Compressor and accessory sections of turbine engines.

(7) Combustor, turbine, and tailpipe sections of turbine engine installations which contain lines or components carrying flammable fluids or gases, except that the fire extinguisher system specified in section 4b.484 need not be provided for such sections if it is demonstrated that any fire occurring therein can be otherwise controlled.

NOTE: See also section 4b.385.

(b) Designated fire zones shall be protected from fire by compliance with sections 4b.481 through 4b.490.

(c) The nacelle area immediately behind the fire wall shall comply with the provisions of sections 4b.385, 4b.463 (d), 4b.478 (b), (4), 4b.481 (c) 4b.482 through 4b.485 and 4b.489. If a retractable landing gear is located in this area, compliance with this paragraph is required only with the landing gear retracted.

4b.481 *Flammable fluids.*

(a) No tanks or reservoirs which are a part of a system containing flammable fluids or gases shall be located in designated fire zones, except where the fluid contained, the design of the system, the materials used in the tank, the shut-off means, all connections, lines, and controls are such as to provide an equally high degree of safety.

(b) Not less than one-half inch of clear air space shall be provided between any tank or reservoir and a fire wall or shroud isolating a designated fire zone.

(c) If absorbent materials are located in proximity to flammable fluid system components which might be subject to leakage, such materials shall be covered or treated to prevent the absorption of hazardous quantities of fluids.

4b.482 *Shut-off means.*

(a) Means for each individual engine and for each individual fire zone specified in section 4b.480 (a) (4) and (5) shall be provided for shutting off or otherwise preventing hazardous quantities of fuel, oil, de-icer, and other flammable fluids from flowing into, within, or through any designated fire zone, except that means need not be provided to shut off flow in lines forming an integral part of an engine. Closing the fuel shut-off valve for any engine shall not make any of the fuel supply unavailable to the remaining engines.

(b) Operation of the shut-off means shall not interfere with the subsequent emergency operation of other equipment, such as feathering the propeller.

(c) The shut-off means shall be located outside of designated fire zones, unless an equally high degree of safety is otherwise provided (see sec. 4b.481). It shall be shown that no hazardous quantity of flammable fluid could drain into any designated fire zone after shutting-off has been accomplished.

(d) Provisions shall be made to guard against inadvertent operation of the shut-off means and to make it possible for the crew to reopen the shut-off means in flight after it has once been closed.

4b.483 *Lines and fittings.*

(a) All lines and fittings carrying flammable fluids in designated fire zones shall be fire-resistant, except as otherwise provided in this section. If flexible hose is used, the assembly of hose and end fittings shall be of an approved type. The provisions of this paragraph need not apply to those lines and fittings which form an integral part of the engine.

(b) Vent and drain lines and their fittings shall be subject to the provisions of paragraph (a) of this section unless a failure of such line or fitting will not result in, or add to, a fire hazard.

4b.484 *Fire extinguisher systems.*

(a) *General.*

(1) Fire extinguisher systems shall be provided to serve all designated fire zones. This requirement shall be effective with respect to applications for type certificates in accordance with the provisions of section 4b.11(a). In addition, all other airplanes manufactured

after June 30, 1954, shall comply with this requirement, unless the engine power section is completely isolated from the engine accessory section by a fireproof diaphragm complying with the provisions of section 4b.488 and unless the cowling and nacelle skin comply with the provisions of section 4b.487, in which case fire extinguisher systems need not be provided in the engine power section.

NOTE: *Induction systems for reciprocating engines* are considered to be located in a designated fire zone, and therefore subject to the fire extinguisher protection provisions unless tests or experience with the particular type of induction and carburetion systems shows that fuel burning in the induction system passages is not likely to occur.

(2) The fire extinguishing system, the quantity of extinguishing agent, and the rate of discharge shall be such as to provide two adequate discharges. It shall be possible to direct both discharges to any main engine installation. Individual "one-shot" systems shall be acceptable in the case of auxiliary power units, fuel-burning heaters, and other combustion equipment.

(3) The fire-extinguishing system for a nacelle shall be capable of protecting simultaneously all zones of the nacelle for which protection is provided.

(b) ***Fire extinguishing agents.***

(1) Extinguishing agents employed shall be methyl bromide, carbon dioxide, or any other agent which has been shown to provide equivalent extinguishing action.

(2) If methyl bromide, carbon dioxide, or any other toxic extinguishing agent is employed, provision shall be made to prevent the entrance of harmful concentration of fluid or fluid vapors into any personnel compartments either due to leakage during normal operation of the airplane or as a result of discharging the fire extinguisher on the ground or in flight even though a defect may exist in the extinguishing system. Compliance with this requirement shall be demonstrated by appropriate tests.

(3) If a methyl bromide system is provided, the containers shall be charged with a dry agent and shall be sealed by the fire extinguisher manufacturer or by any other party employing appropriate recharging equipment.

(c) ***Extinguishing agent container pressure relief.*** Extinguisher agent containers shall be provided with a pressure relief to prevent bursting of the container due to excessive internal pressures. The following provisions shall apply:

(1) The discharge line from the relief connection shall terminate outside the airplane in a location convenient for inspection on the ground.

(2) An indicator shall be provided at the discharge end of the line to provide a visual indication when the container has discharged.

(d) ***Extinguishing agent container compartment temperature.*** Under all conditions in which the airplane is intended for operation, the temperature range of the extinguishing agent containers shall be maintained to assure that the pressure in the containers can neither fall below the minimum necessary to provide an adequate rate of extinguisher agent discharge nor rise above a safe limit so that the system will not be prematurely discharged.

(e) ***Fire-extinguishing system materials.*** Materials in the fire extinguishing system shall not react chemically with the extinguishing agent so as to constitute a hazard. All components of the fire extinguishing systems located in designated fire zones shall be constructed of fireproof materials.

4b.484–1 *Determination of carbon dioxide concentration in flight crew compartments. (FAA policies which apply to sec. 4b.484(b)).*

(a) Carbon dioxide has been found to adversely affect flight crew personnel in the performance of their duties. Therefore in aircraft equipped with built-in carbon dioxide fuselage compartment fire extinguishing systems, the carbon dioxide concentration occurring at the flight crew stations as a result of discharging the fire extinguishers should be determined in accordance with paragraphs (b) and (c), except that such determination is not considered necessary if:

(1) Five pounds or less of carbon dioxide will be discharged into any one such fuselage compartment in accordance with established fire control procedures, or

(2) Protective breathing equipment is provided for each flight crew member on flight deck duty.

(b) The carbon dioxide concentrations at breathing level at the flight crew stations should be determined in flight tests during which fuselage compartment fire extinguishers are discharged in accordance with established fire control procedures. Since carbon dioxide is heavier than air, a nose down attitude is likely to produce the critical concentrations in the crew compartment. The following conditions should therefore be investigated:

(1) A rapid descent at the "Never Exceed" speed of the airplane with flaps and landing gear up,

(2) A rapid descent with flaps and landing gear down, at the maximum permissible speed for this configuration. If it appears that any other condition is likely to be critical on a particular airplane, it should also be investigated.

(c) In the flight tests specified in (b), it will be permissible to institute emergency ventilating procedures immediately prior to or following the discharge of carbon dioxide, provided such procedures can be accomplished easily and quickly by the flight crew and do not appreciably reduce the effectiveness of the fire protection system.

(d) If the carbon dioxide concentrations determined in accordance with paragraphs (b) and (c) exceed 3 percent by volume (corrected to standard sea-level conditions), protective breathing equipment should be provided for each flight crew member on flight deck duty.

(e) Appropriate emergency operating procedures should be entered in the Airplane Flight Manual.

(15 F. R. 8904, Dec. 15, 1950, effective Dec. 15, 1950.)

4b.485 *Fire-detector systems.* Quick-acting fire or overheat detectors of an approved type shall be provided in all designated fire zones and in the combustion, turbine, and tail-pipe sections of turbine-engine installations, and they shall be sufficient in number and location to assure prompt detection of fire in such zones and sections. Fire detectors shall comply with the following provisions:

(a) Fire detectors shall be constructed and installed to assure their ability to resist without failure all vibration, inertia, and other loads to which they would be subjected in operation.

(b) Fire detectors shall be unaffected by the exposure to oil, water, or other fluids or fumes which might be present.

(c) Means shall be provided to permit the crew to check in flight the functioning of the electric circuit associated with the fire-detection system.

(d) Wiring and other components of detector systems which are located in fire zones shall be of fire-resistant construction.

(e) Detector system components for any fire zone shall not pass through other fire zones, unless they are protected against the possibility of false warnings resulting from fires in zones through which they pass. This requirement shall not be applicable with respect to zones which are simultaneously protected by the same detector and extinguisher systems.

4b.485–1 *Fire detector test circuit (FAA policies which apply to sec. 4b.485 (c)).*

(a) The checking means should serve to assure the crew that a fire within the zone of coverage will produce a fire warning if all fire-responsive (detector) elements are operative. The means need not be designed to disclose whether fire detector sensor elements themselves would respond properly to a fire.[31]

(b) The check should reveal any probable malfunction or failure in the fire-detection system, external to the detector elements, which could interfere with, or prevent, fire warning. Open and short circuits in wiring, and inoperative lights, bells, switches, or relays are examples of malfunctions which should be revealed by such a check.

(22 F. R. 6885, Aug. 27, 1957, effective Sept. 15, 1957.)

4b.486 *Fire walls.* All engines, auxiliary power units, fuel-burning heaters, and other combustion equipment which are intended for operation in flight as well as the combustion, turbine, and tail pipe sections of turbine engines shall be isolated from the remainder of the airplane by means of fire walls, shrouds, or other equivalent means. The following shall apply:

(a) Firewalls and shrouds shall be constructed in such a manner that no hazardous quantity of air, fluids, or flame can pass from

[31] This is normally a separate ground maintenance operation.

the compartment to other portions of the airplane.

(b) All openings in the fire wall or shroud shall be sealed with close-fitting fireproof grommets, bushings, or firewall fittings.

(c) Firewalls and shrouds shall be constructed of fireproof material and shall be protected against corrosion.

4b.487 *Cowling and nacelle skin.*

(a) Cowling shall be constructed and supported so as to make it capable of resisting all vibration, inertia, and air loads to which it would be subjected in operation.

(b) Cowling shall have drainage and ventilation provisions as prescribed in section 4b.489.

(c) On airplanes equipped with a diaphragm complying with section 4b.488, the parts of the accessory section cowling which might be subjected to flame in the event of a fire in the engine power section of the nacelle shall be constructed of fireproof material and shall comply with the provisions of section 4b.486.

(d) Those portions of the cowling which would be subjected to high temperatures due to their proximity to exhaust system parts or exhaust gas impingement shall be constructed of fireproof material.

(e) The airplane shall be so designed and constructed that, in the event of fire originating in the engine power or accessory sections, the probability is extremely remote for fire to enter either through openings or by burning through external skin into any other zone of the nacelle where such fire could create additional hazards. If the airplane is provided with a retractable landing gear, this provision shall apply with the landing gear retracted. Fireproof materials shall be used for all nacelle skin areas which might be subjected to flame in the event of a fire originating in the engine power or accessory sections.

4b.488 *Engine accessory section diaphragm.* Unless equivalent protection can be shown by other means, a diaphragm shall be provided on air-cooled engines to isolate the engine power section and all portions of the exhaust system from the engine accessory compartment and on turbine engines to isolate the combustion, turbine, and tail pipe sections from the compressor and the accessory sections. This diaphragm shall comply with the provisions of section 4b.486.

4b.489 *Drainage and ventilation of fire zones.*

(a) Complete drainage of all portions of designated fire zones shall be provided to minimize the hazards resulting from failure or malfunctioning of components containing flammable fluids. The drainage provisions shall be effective under conditions expected to prevail when drainage is needed and shall be so arranged that the discharged fluid will not cause an additional fire hazard.

(b) All designated fire zones shall be ventilated to prevent the accumulation of flammable vapors. Ventilation openings shall not be placed in locations which would permit the entrance of flammable fluids, vapors, or flame from other zones. The ventilation provisions shall be so arranged that the discharged vapors will not cause an additional fire hazard.

(c) Except with respect to the engine power section of the nacelle and the combustion heater ventilating air ducts, provision shall be made to permit the crew to shut off sources of forced ventilation in any fire zone, unless the extinguishing agent capacity and rate of discharge are based on maximum air flow through the zone.

4b.490 *Protection of other airplane components against fire.*

(a) All airplane surfaces aft of the nacelles, in the region of one nacelle diameter on both sides of the nacelle center line, shall be constructed of fire-resistant material. This provision need not be applied to tail surfaces lying behind nacelles, unless the dimensional configuration of the aircraft is such that the tail surfaces could be affected readily by heat, flames, or sparks emanating from a designated fire zone or engine compartment of any nacelle.

(b) Consideration shall be given to the effect on adjacent parts of the airplane of heat within designated fire zones and within the combustion, turbine, and tail pipe sections of turbine engines.

Subpart F—Equipment

General

4b.600 ***Scope.*** The required basic equipment as prescribed in this subpart is the minimum which shall be installed in the airplane for certification. Such additional equipment as is necessary for a specific type of operation is prescribed in the operating rules of this subchapter.

4b.601 ***Functional and installational requirements.*** Each item of equipment shall be:

(a) Of a type and design appropriate to perform its intended function,

(b) Labeled as to its identification, function, or operational limitations, or any combination of these, whichever is applicable,

(c) Installed in accordance with specified limitations of the equipment,

(d) Demonstrated to function properly in the airplane.

4b.602 ***Required basic equipment.*** The equipment listed in sections 4b.603 through 4b.605 shall be the required basic equipment. (See sec. 4b.600.)

4b.603 ***Flight and navigational instruments.*** (See sec. 4b.612 for installation requirements.)

(a) Air-speed indicating system. If the air-speed limitations vary with altitude, the air-speed indicator shall incorporate a maximum allowable air-speed indication showing the variation of V_{NE} with altitude including compressibility limitations. (See sec. 4b.732.)

(b) Altimeter (sensitive or precision type),

(c) Rate-of-climb indicator (vertical speed),

(d) Free air temperature indicator,

(e) Clock (sweep-second pointer type),

(f) Rate-of-turn indicator (gyroscopic type with integral bank or slip indicator),

(g) Bank and pitch indicator (gyroscopically stabilized),

(h) Direction indicator (gyroscopically stabilized magnetic and/or nonmagnetic type),

(i) Direction indicator (nonstabilized type magnetic compass),

(j) Machmeter for airplanes having compressibility limitations not otherwise indicated to the pilot in accordance with section 4b.732.

4b.604 ***Powerplant instruments.*** (*See* sec. 4b.613 for installation requirements.)

(a) Carburetor air temperature indicator for each reciprocating engine.

(b) Cylinder head temperature indicator for each air-cooled reciprocating engine.

(c) Gas temperature indicator for each turbine engine.

(d) Manifold pressure indicator for each reciprocating engine.

(e) Fuel pressure indicator for each reciprocating engine to indicate the pressure under which the fuel is being supplied.

(f) Fuel pressure warning means for each engine or a master warning means for all engines with provision for isolating the individual warning means from the master warning means.

(g) Fuel flowmeter indicator for each turbine engine. For reciprocating engines, a fuel flowmeter or fuel mixture indicator for each engine not equipped with an automatic altitude mixture control.

(h) Fuel quantity indicator for each fuel tank.

(i) Augmentation liquid quantity indicator for each tank, which is appropriate to the manner in which the liquid is to be used in operations.

(j) Oil quantity indicator for each oil tank. (See sec. 4b.613 (d).)

(k) Oil pressure indicator for each independent pressure oil system of each engine.

(l) Oil pressure warning means for each engine or a master warning means for all engines with provision for isolating the individual warning means from the master warning means.

(m) Oil temperature indication for each engine.

(n) Tachometer for each reciprocating engine.

(o) Tachometer for each turbine engine to indicate the speed of the rotors for which limiting speeds have been established.

(p) Fire-warning indicators. (See sec. 4b.485.)

(q) Thrust indicator for each turbo-jet engine.

(r) A torque indicator for each turbine-propeller engine. A device for each reciprocating engine capable of indicating to the flight crew during flight any change in the power output if the engine is equipped with an automatic propeller feathering system, the operation of which is initiated by a power output measuring system, or if the total engine cylinder displacement is 2,000 cubic inches or more.

(s) Position indicating means for each propeller on a turbine engine to indicate to the flight crew when the propeller blade angle is below the flight low pitch position (see sec. 4b.613). For reciprocating engines, a means for each reversing propeller to indicate to the pilot when the propeller is in reverse pitch.

(t) Position indicating means for each turbine engine utilizing a thrust reversing device to indicate to the flight crew when the device is in the reverse thrust position.

4b.605 *Miscellaneous equipment.*

(a) Approved seats for all occupants (see sec. 4b.358),

(b) Approved safety belts for all occupants (see sec. 4b.643),

(c) Deleted.

(d) Source(s) of electrical energy (see sec. 4b.620),

(e) Electrical protective devices (see sec. 4b.624),

(f) Radio communication system (two-way),

(g) Radio navigation system,

(h) Windshield wiper or equivalent for each pilot,

(i) Ignition switch for each and all engines (see sec. 4b.472),

(j) Approved portable fire extinguisher (see sec. 4b.641).

4b.606 *Equipment, systems, and installations.*

(a) ***Functioning and reliability.*** All equipment, systems, and installations the functioning of which is necessary in showing compliance with the regulations in this subchapter shall be designed and installed to insure that they will perform their intended functions reliably under all reasonably foreseeable operating conditions.

(b) ***Hazards.*** All equipment, systems, and installations shall be designed to safeguard against hazards to the airplane in the event of their malfunctioning or failure.

(c) ***Power supply.*** Where an installation the functioning of which is necessary in showing compliance with the regulations of this subchapter requires a power supply, such installation shall be considered an essential load on the power supply, and the power sources and the system shall be capable of supplying the following power loads in probable operating combinations and for probable durations:

(1) All loads connected to the system with the system functioning normally:

(2) All essential loads after failure of any one prime mover, power converter, or energy storage device;

(3) All essential loads after failure of any one engine on two- or three-engine airplanes, or after failure of any two engines on four-or-more-engine airplanes.

(4) In determining the probable operating combinations and durations of essential loads for the partial power failure conditions prescribed in subparagraphs (2) and (3) of this paragraph, it shall be permissible to assume that the power loads are reduced in accordance with a monitoring procedure which is consistent with safety in the types of operations authorized. If a particular load is not required to maintain controlled flight it need not be considered for the two-engine-inoperative condition on airplanes with four or more engines as prescribed in subparagraph (3) of this paragraph.

4.606–1 *Safety criteria*[32] *for electric utilization systems (FAA policies which apply to sec. 4b.606 (a) and (b)).* Electric utilization systems[33] should be analyzed, inspected or tested

[32] When applying these criteria to particular systems, it should be clear that the degree of hazard resulting from a type of malfunction may vary considerably with the type of aircraft in which the system is installed, or with the nature of the operation in which the aircraft is utilized. Examples of systems which should be considered under certain of the above criteria are as follows: (a) Basic flight instruments, minimum navigation equipment; (b) propeller reversing system, trim-tab system, dive brake system, landing gear actuation systems; (c) fuel control valve system, propeller control system; (d) landing gear indicating system, radio navigation system, instrument landing system, gyroscopic instrument systems. Additional safety criteria are contained in sections of this part applicable to particular systems and components of the airplane.

[33] An electric utilization system is a system of electric equipment, devices and connected wiring, which utilizes electric energy to perform a specific aircraft function. The system includes all electric components beyond the nearest bus or sub-bus from which electric energy is supplied. Examples of such systems are: propeller control system, electric flight instrument system, radio navigation equipment system, fuel valve control system, flap and landing gear actuating systems.

to assure conformance to the following safety criteria.

(a) *Loss of system function.* The system should not be rendered inoperative by any probable malfunction,[34] if operation of this system is necessary to maintain controlled flight or effect a safe landing for any authorized flight operation.

(b) *Inadvertent operation of system.* The system should not be inadvertently set into operation by any probable malfunction, if such inadvertent operation can result in the inability to maintain controlled flight or effect a safe landing for any authorized flight operation.

(c) *Systems serving two or more engines.* No probable malfunction in the system should adversely affect the performance of more than one propulsion engine, consistent with the provisions of section 4b.401 (b).

(d) *System independence.* No probable malfunction in one system should render another system inoperative, if both systems are necessary in showing compliance with this part.

(e) *Misleading system indicators.* No probable malfunction in the system should result in a safe indication of an unsafe condition of flight, if such misleading information can result in the inability to maintain controlled flight or effect a safe landing for any authorized flight operation.

(f) *System overheat.* No probable malfunction in the system should result in overheat of electric equipment, such that hazardous quantities of smoke are generated within the cabin, or such that a fire hazard is created, unless adequate means are provided to detect and correct the overheat condition during flight.

(g) *Electric shock exposure.* No probable malfunction in the system should expose crew or passengers to harmful electric shock, during any normal activity on the aircraft.

(21 F. R. 2747, Apr. 28, 1956, effective May 25, 1956.)

4b.606–2 *Installation of flight recorders (FAA policies which apply to sec. 4b.606).* Flight recorders required under Parts 40, 41, and 42 of the Civil Air Regulations as amended should be installed in the airplane in conformance with the following:

(a) *Location of flight recorder.* The recorder should be located in accordance with the applicable type in the following:

Type I—Unrestricted location,

Type II—Restricted to any location more than ½ of the wing root chord from the main wing structure through the fuselage and from any fuel tanks,

Type III—Unrestricted location.

(b) *Vertical acceleration sensing.*

(1) The vertical acceleration forces should be sensed at a location within or adjacent to the fuselage, and within or as close to the center of gravity range of the airplane as practicable.

(2) The vertical acceleration sensor, or the unit in which it is contained, should be attached to a rigid structural member of the airplane so that vertical acceleration forces present in that area can be sensed with a minimum of error.

(3) Sensing of only the in-flight vertical acceleration forces is necessary; impact forces need not be sensed.

(c) *Connection to sources of data.* The airspeed, altitude, and heading data should be obtained from either [34a] a required duplicate instrument, or from a source independent of required flight and navigation instrument systems, or a combination thereof. No connection should be made within the case itself of the altimeter indicators. If data are obtained from an independent source, such source should provide data which has an accuracy equivalent to corresponding data furnished by required flight and navigation instrument systems. Provisions need not be made to disconnect or isolate the recorder in flight from sources of data which are independent of required flight and navigation instruments.

(d) *Connection to electrical power.* The flight recorder should be connected to a bus of maximum reliability when such connection does not jeopardize service to essential or emergency loads. If service to such loads is affected, the

[34] A probable malfunction is any single electrical or mechanical malfunction or failure within a utilization system which is considered probable on the basis of past service experience with similar components in aircraft applications. This definition should be extended to multiple malfunctions when: (1) The first malfunction would not be detected during normal operation of the system, including periodic checks established at intervals which are consistent with the degree of hazard involved or (2) the first malfunction would inevitably lead to other malfunctions. This definition of "probable malfunction" applies wherever this term is used in this section.

[34a] See section 4b.612 (f) for requirements concerning the connection of additional instruments to required duplicate and duplicated instrument systems.

recorder should be connected to a bus of the next lower reliability.

(23 F. R. 2728, Apr. 24, 1958, effective May 5, 1958; amended in 23 F. R. 7482, Sept. 26, 1958, effective Oct. 20, 1958.)

Instruments; Installation

4b.610 *General.* The provisions of sections 4b.611 through 4b.613 shall apply to the installation of instruments.

NOTE: It may be necessary to duplicate certain instruments at two or more crew stations to meet the instrument visibility requirements prescribed in section 4b.611, or when required by the operating rules of the Civil Air Regulations for reliability or cross-check purposes in particular types of operations. In the latter case, independent operating systems would be required in accordance with the provisions of section 4b.612 (f).

4b.611 *Arrangement and visibility of instrument installations.*

(a) Flight, navigation, and powerplant instruments for use by each pilot shall be plainly visible to him from his station with the minimum practicable deviation from his normal position and line of vision when he is looking out and forward along the flight path.

(b) Flight instruments required by section 4b.603 shall be grouped on the instrument panel and centered as nearly as practicable about the vertical plane of the pilot's forward vision. The four basic instruments specified in subparagraphs (1) through (4) of this paragraph shall be located on the flight instrument panel as follows:

(1) The top center position on the panel shall contain that instrument which, of all instruments on the panel, most effectively indicates attitude.

(2) The position adjacent to and directly to the left of the top center position shall contain that instrument, which, of all instruments on the panel, most effectively indicates air speed.

(3) The position adjacent to and directly to the right of the top center position shall contain that instrument which, of all instruments on the panel, most effectively indicates altitude.

(4) The position adjacent to and directly below the top center position shall contain that instrument which, of all instruments on the panel, most effectively indicates direction of flight.

(c) All the required powerplant instruments shall be closely grouped on the instrument panel.

(d) Identical powerplant instruments for the several engines shall be located to prevent any misleading impression as to the engines to which they relate.

(e) Powerplant instruments vital to the safe operation of the airplane shall be plainly visible to the appropriate crew members.

(f) The vibration characteristics of the instrument panel shall be such as not to impair seriously the accuracy of the instruments or to damage them.

4b.611–1 *Procedure for checking arrangement and visibility of instrument installations (FAA policies which apply to sec. 4b.611).* The arrangement and visibility of the instruments should be checked throughout the type tests in order to supply the information which is necessary to complete the pertinent portions of Form ACA 283–4b, Type Inspection Report.

(19 F. R. 4466, July 20, 1954, effective Sept. 1, 1954.)

4b.612 *Flight and navigational instruments.*

(a) *Air-speed indicating systems.*

(1) Air-speed indicating instruments shall be of an approved type and shall be calibrated to indicate true airspeed at sea level in the standard atmosphere with a minimum practicable instrument calibration error when the corresponding pitot and static pressures are applied to the instrument.

(2) The air-speed indicating system shall be calibrated to determine the system error, i. e., the relation between IAS and CAS, in flight and during the accelerated take-off ground run. The ground run calibration shall be obtained from 0.8 of the minimum value of V_1 to the maximum value of V_2, taking into account the approved altitude and weight range for the airplane. In the ground run calibration, the flap and power settings shall correspond with the values determined in the establishment of the take-off path under the provisions of section 4b.116, assuming the critical engine to fail at the minimum approved value of V_1.

(3) The air-speed error of the installation, excluding the air-speed indicator instrument calibration error, shall not exceed 3 percent or

5 mph, whichever is the greater, throughout the speed range from V_{NO} to 1.3 V_{S_1} with flaps retracted, and from 1.3 V_{S_0} to V_{FE} with flaps in the landing position.

(4) The air-speed indicating system shall be arranged in so far as practicable to preclude malfunctioning or serious error due to the entry of moisture, dirt, or other substances.

(5) The air-speed indicating system shall be provided with a heated pitot tube or equivalent means of preventing malfunctioning due to icing.

(6) Where duplicate air-speed indicators are required, their respective pitot tubes shall be spaced apart to avoid damage to both tubes in the event of a collision with a bird.

(b) *Static air vent and pressure altimeter systems.*

(1) All instruments provided with static air case connections shall be vented to the outside atmosphere through an appropriate piping system.

(2) The vent(s) shall be so located on the airplane that its orifices will be least affected by air flow variation, moisture, or other foreign matter.

(3) The installation shall be such that the system will be air-tight, except for the vent into the atmosphere.

(4) Pressure altimeters shall be of an approved type and shall be calibrated to indicate pressure altitude in standard atmosphere with a minimum practicable instrument calibration error when the corresponding static pressures are applied to the instrument.

(5) The design and installation of the altimeter system shall be such that the error in indicated pressure altitude at sea level in standard atmosphere, excluding instrument calibration error, does not result in a value more than the ± 30 feet per 100 knots in speed for the appropriate configuration in the speed range between 1.3 V_{S_0} (flaps extended) and 1.8 V_{S_1} (flaps retracted), except that the error need not be less than ± 30 feet.

(c) *Magnetic direction indicator.*

(1) The magnetic direction indicator shall be installed so that its accuracy will not be excessively affected by the airplane's vibration or magnetic fields of a permanent or transient nature.

(2) After the magnetic direction indicator has been compensated, the calibration shall be such that the deviation in level flight does not exceed $\pm 10°$ on any heading.

(3) A calibration placard shall be provided as specified in section 4b.733.

(d) *Automatic pilot system.* If an automatic pilot system is installed, it shall be of an approved type, and the following shall be applicable:

(1) The system shall be so designed that the automatic pilot can be quickly and positively disengaged by the human pilots to prevent it from interfering with their control of the airplane.

(2) A means shall be provided to indicate readily to the pilot the alignment of the actuating device in relation to the control system which it operates, except when automatic synchronization is provided.

(3) The manually operated control(s) for the system's normal operation shall be readily accessible to the pilots. The quick release (emergency) controls shall be installed on both the pilots' control wheels, on the side of the wheel opposite from the throttles. Attitude controls shall operate in the same plane and sense of motion as specified for the cockpit controls in section 4b.353 (b) and Figure 4b–16. The direction of motion shall be plainly indicated on or adjacent to each control.

(4) The automatic pilot system shall be of such design and so adjusted that, within the range of adjustment available to the human pilot, it cannot produce hazardous loads on the airplane or create hazardous deviations in the flight path under any conditions of flight appropriate to its use either during normal operation or in the event of malfunctioning, assuming that corrective action is initiated within a reasonable period of time.

(5) When the automatic pilot integrates signals from auxiliary controls or furnishes signals for operation of other equipment, positive interlocks and sequencing of engagement shall be provided to preclude improper operation. Protection against adverse interaction of integrated components resulting from a malfunction shall be provided.

(e) *Instruments utilizing a power supply.* The following shall apply to each instru-

ment required in section 4b.603(f), (g), and (h) which utilizes a power supply:

(1) Each instrument shall have a visual type of power failure indicating means, integral with or located adjacent to the instrument, to indicate when adequate power is not being supplied to the instrument (see note) to sustain proper instrument performance. The power shall be sensed at or near the point where power enters the instrument. For electric instruments power shall be deemed adequate when voltage is between approved limits.

(2) Each instrument shall be provided with two independent sources of power and a means of selecting either power source. When duplicate independent instruments are installed, power source selection need not be provided if each instrument has an independent power source.

(3) The installation and power supply system shall be such that failure of one instrument, or the energy supply from one source, or a fault in any part of the power distribution system, will not interfere with the proper supply of energy from the other source. (See also secs. 4b.606(c) and 4b.623.)

Note: **The word "instrument" as used herein includes those devices which are physically contained in one unit and those devices which are composed of two or more physically separate units or components connected together; such as a remote indicating gyroscopic direction indicator which includes a magnetic sensing element, a gyroscopic unit, an amplifier, and an indicator connected together.**

(f) *Duplicate instrument systems.* If duplicate flight instruments are required by the operating parts of the Civil Air Regulations (see note under sec. 4b.610), the operating system for a duplicate instrument shall be completely independent of the operating system for the duplicated instrument. Additional instruments shall not be connected to the first pilot system. If additional instruments are connected to the other system, provision shall be made to disconnect or isolate in flight such additional instruments.

4b.612–1 *Airspeed indicating system calibration (FAA policies which apply to sec. 4b.612 (a)).*

(a) Unless a calibrated referenced airspeed system is provided, the airplane's system should be calibrated throughout as wide a range as necessary to cover the intended flight tests. The tests in (c) are for the purpose of showing compliance with section 4b.612(a) and not intended to cover the speed range of the flight tests. If an alternate airspeed indicating system is provided, it should also be calibrated. The airspeed indicating system should be calibrated in accordance with the following methods:

(1) The tests should be conducted in stabilized flight at airspeeds throughout the speed range for the airplane configurations to be tested. The airplane's airspeed indicator should be calibrated against a reference airspeed system or against a groundspeed course.

(2) A reference airspeed system should consist of either of the following:

(i) An airspeed impact pressure and static pressure measurement device or devices that are free from error due to airplane angular changes relative to the direction of the free stream or due to slipstream variation resulting from changes in airplane configuration or power. In addition the device or devices should have a known calibration error when located in the free stream, or

(ii) Any other acceptable airspeed calibration method, for example, the altimeter method of airspeed calibration. However, when using the altimeter method care should be exercised to measure the airplane's altitude accurately—especially at speeds below 125 m. p. h.

(3) When establishing the airplane's true airspeed by means of the groundspeed course, flight between the two reference points should be made at constant airspeed in two successive runs in opposite directions to eliminate the effect of wind. The runs should be made only in stable wind. The time to make the runs should be obtained by means of some calibrated device. The speed runs should not be made nearer the ground surface than a wing span's length.

(4) If an alternate system is provided it may be calibrated against either the reference system or the airplane's system.

(b) *Configuration.* Airspeed calibration tests should be conducted in the configurations that follow:

Weight—between maximum takeoff and maximum landing.

C. G. position—optional.

Wing flaps and landing gear retracted.

Wing flaps in landing position and landing gear extended.
Engines—optional power.
Mixture setting—optional.
Cowl flaps—optional.

(c) *Test procedure and required data.* Any one or any desired combination of the procedures in (1) through (3) of this paragraph may be used for calibrating the airspeed instrument. The airspeed should be measured or determined simultaneously from the airplane's and the reference system during stabilized runs for at least five speeds spaced throughout the speed range, the lowest not to exceed 1.3 V_{s_1}. The highest speed should not exceed V_{NO}, placard speed, or speed in level flight using maximum continuous power, whichever is lower. The speed spread between the test speeds should be limited to 10 m. p. h. from 1.3 V_{s_1} to 1.6 V_{s_1} or placard speed, and 30 m. p. h. from 1.6 V_{s_1} to V_{NO}.

(1) *Speed course.* The airspeed and altitude should be stabilized before entering the speed course. Constant airspeed should be maintained during each run. The runs should be made in both directions for each speed over the speed course. The following data should be recorded:

Time of day at beginning of run.
Time to make run.
Pressure altitude.
Ambient air temperature.
Airspeed at several intervals during run.
Wing flap position.
Landing gear position.
Course distance.

(2) *Reference airspeed system.* Stabilized runs at the test speeds listed in (c) should be made. The airspeed from the airplane's airspeed system and the reference airspeed system should be read simultaneously. The following data should be recorded:

Time of day.
Airplane's indicated airspeed.
Reference indicated airspeed.
Pressure altitude.
Ambient air temperature.
Wing flap position.
Landing gear position.

(3) *Other acceptable airspeed calibration methods.* Stabilized flight runs at the test speeds should be made and the necessary data recorded to establish the airplane's airspeed system error and the configuration of the airplane.

(19 F. R. 4466, July 20, 1954, effective Sept. 1, 1954, amended. 20 F. R. 2280, Apr. 8, 1955, effective Apr. 30, 1955, further amended 20 F. R. Sept. 10, 1955, effective Sept. 30, 1956.)

4b.612–2 *Static air vent system (FAA policies which apply to sec. 4b.612 (b)).*

(a) If the altimeter installation is of the pressure type its operation will be affected by any error that exists in the static air pressure. Since the accuracy of the altimeter is of utmost importance the static air vent system should be calibrated. If separate or alternate vent systems are employed for the altimeter and airspeed indicator, separate calibrations are required. Where the altimeter, rate of climb indicator, and airspeed indicators are vented to the same static systems, the altimeter calibration may be made in conjunction with the airspeed calibrations.

(b) The theoretical relationship between airspeed error and altimeter error is given in Figure 4 so that an altimeter calibration may be derived from the airspeed calibration if both use the same static vent provided that the total head installation is such as to provide true readings over the range of angles involved.

(19 F. R. 4466, July 20, 1954, effective Sept. 1, 1954.)

4b.612–3 *Calibration of magnetic direction indicator (FAA policies which apply to sec. 4b.612 (c)).* It is recommended that the magnetic direction indicator be calibrated while the airplane is on the ground with its engines and electrical equipment operating. The calibration data should be included in Form ACA 283–4b.

(19 F. R. 4466, July 20, 1954, effective Sept. 1, 1954.)

4b.612–4 *Automatic pilot systems (FAA policies which apply to sec. 4b.612 (d)).* To preclude hazardous conditions which may result from any failure or malfunctioning of the automatic pilot system, or its inadvertent use by the human pilot, the conditions of paragraphs (a) through (e) and paragraph (h) of this section should be investigated by flight test.

(a) A signal about any axis equivalent to the cumulative effect of any single failure (or if

542115 O—60——12

multiple axis failures can result from the malfunction of any single component, combined signals about all affected axes) should be induced into the automatic pilot system during normal climb,[35] cruise, and descent regimes. When corrective action is taken 3 seconds after the airplane response[36] to the malfunction neither the simulated failure nor the subsequent corrective action should create loads beyond an envelope of 0 to 2 g, or speeds beyond V_{NE} (or M_{NE} where appropriate), or dangerous deviations from the flight path, except that the positive g limitation may be increased up to the positive design maneuvering load factor if it has previously been determined analytically that neither the simulated failure nor subsequent corrective action would result in loads beyond the design limit loads of the airplane.

(1) Recovery should be demonstrated either by overpowering or by manual use of an emergency quick disconnect device after the 3-second delay. The pilot should be able to return the airplane to its normal flight attitude under full manual control without exceeding the loads or speed limits defined in this paragraph and without engaging in any dangerous maneuvers during recovery. If an emergency quick disconnect button is not installed on the control wheel it should be possible to overpower servo forces plus resultant airloads in all configurations and attitudes of flight demonstrated, including maximum speed for which approval is sought, without exceeding the following control forces measured at the pilot's controls: pitch 50 pounds; roll 30 pounds (force applied at rim); yaw 150 pounds. The maximum altitude loss experienced during these tests should be entered in the Airplane Flight Manual under "Emergency Operating Procedures."

(b) The automatic pilot system should be able to perform its intended function throughout all appropriate maneuvers. All such maneuvers should be accomplished smoothly and without subjecting the airplane to loads greater than those described in paragraph (a) of this section.

[35] The configuration for normal climb will be that for operational all-engine climb with 75 percent maximum continuous power and flaps retracted.

[36] Adequate instrumentation should be installed to register response of the airplane to the induced malfunction. One acceptable method would be by measurement of airplane acceleration.

(c) If the automatic pilot system includes an approach coupler it should be able to perform its intended function, and the following should apply:

(1) Throughout an approach no signal or combination of signals simulating the cumulative effect of any single failure or malfunction in the automatic pilot system should produce hazardous deviations in the flight path or any degree of loss of control if corrective action is initiated one second after the airplane responds to the malfunction.

(i) The airplane should be flown down the ILS (or along a flight path simulating the ILS) in the approach configuration. At a predetermined point a failure should be induced in the automatic pilot system. One second after the airplane responds to the malfunction, the pilot should take corrective action by either overpowering or manually disconnecting the automatic pilot (utilizing the emergency quick disconnect button on the control wheel). The vertical distance below the glide path, measured from the point at which level flight is regained, should be entered in the Airplane Flight Manual under "Emergency Operating Procedures."

(2) An engine failure during a normal ILS approach should not cause a lateral deviation of the airplane from the flight path at a rate greater than three degrees per second.

(3) If approval is sought for ILS approaches initiated with one engine inoperative, the automatic pilot should be capable of conducting the approach, and the provisions of subparagraph (1) of this paragraph should be complied with.

(4) A visual means should be provided between the automatic pilot and the flight path coupler to indicate to the pilot when the automatic pilot is uncoupled from the airborne navigational reference.

(d) For an automatic pilot without an approach coupler, where the applicant desires approval for low approaches, the conditions outlined in paragraphs (c) (1), (2), and (3) should apply.

(e) If an automatic trim system is incorporated into the automatic pilot, it should be so designed and installed that any failure will not create a hazardous condition to either automatic or manual flight.

(f) When an emergency quick disconnect device is installed on the automatic pilot, the release buttons should be located on both the pilot's and copilot's control wheels, on the side of the wheel opposite from the throttles.

(g) The automatic pilot system should be so installed that its operation will not be adversely affected by spurious signals from other sources, or as a result of normal variations in the automatic pilot system power source, or feedback by other equipment operating from the same power source (see secs. 4b.625 (b) and 4b.650 (c)).

(h) The automatic pilot system should be so installed and adjusted that the servo stall forces established during certification tests can be maintained in normal operation. This may be assured by conducting flight tests throughout the envelope of servo stall forces. Those tests conducted to determine that the automatic pilot system will adequately control the aircraft should establish the lower stall force limit; and those tests to determine that the automatic pilot will not impose dangerous loads or deviations from the flight path should be conducted at the upper stall force limit.

(i) A positive means should be provided to indicate to the pilot when the automatic pilot is ready for operation or when the gyroscopic components are uncaged, unless it is impossible (as a result of design features) to engage the automatic pilot before it is ready for operation.

(j) The following information should be placed on the Aircraft Specification:

(1) Servo motor and gear train model numbers.

(2) Servo unit pulley sizes.

(3) Upper and lower limiting stall forces measured at the servo motors.

(k) The following information should be placed in the Airplane Flight Manual:

(1) Under the operating limitations section, airspeed limitations and other applicable operating limitations.

(2) Under the operating procedures section, normal operation information.

(3) Under the emergency operating procedures section, a statement of altitude lost in the cruising configuration (see paragraph (a) (1) of this section); a statement of altitude lost on ILS approaches (see paragraph (c) (1) (i) of this section); and any other applicable emergency procedure information.

(21 F. R. 2124, Apr. 3, 1956, effective Apr. 14, 1956.)

4b.612–5 *Connection of additional instruments to duplicate instrument system (FAA policies which apply to sec. 4b.612 (f)).* Neither the accuracy nor the performance of any required duplicate instrument should be reduced below the minimum required by the pertinent Civil Air Regulations when an additional instrument is connected to or is subsequently disconnected from the system.

(23 F. R. 2728, Apr. 24, 1958, effective May 5, 1958, amended in 23 F. R. 7482, Sept 26, 1958, effective Oct. 20, 1958.)

4b.613 *Powerplant instruments.*

(a) *Instrument lines.*

(1) Powerplant instrument lines carrying flammable fluids or gases under pressure shall be provided with restricted orifices or equivalent safety devices at the source of the pressure to prevent the escape of excessive fluid or gas in case of line failure.

(2) The provisions of sections 4b.432 and 4b.433 shall be made applicable to powerplant instrument lines.

(b) *Fuel quantity indicator.* Means shall be provided to indicate to the flight crew the quantity in gallons or equivalent units of usable fuel in each tank during flight. The following shall apply:

(1) Tanks, the outlets and air spaces of which are interconnected, shall be considered as one tank for the purpose of providing separate indicators.

(2) Exposed sight gauges shall be protected against damage.

(3) Fuel quantity indicators shall be calibrated to read zero during level flight when the quantity of fuel remaining in the tank is equal to the unusable fuel supply as defined by section 4b.416 (see sec. 4b.736).

(c) *Fuel flowmeter system.* When a flowmeter system is installed, the metering component shall include a means for bypassing the fuel supply in the event that malfunctioning of the metering component results in a severe restriction to fuel flow.

(d) *Oil quantity indicator.*

(1) A stick gauge or other equivalent means shall be provided to indicate the quantity of oil in each tank. (See sec. 4b.735.)

(2) If an oil transfer system or a reserve oil supply system is installed, means shall be provided to indicate to the crew during flight the quantity of oil in each tank.

(e) *Turbine-propeller blade position indicating means.* The indicating means required for turbine propellers by section 4b.604 (s) shall initiate indication before the propeller blade has moved more than eight degrees below the flight low pitch stop. The source of the indication shall sense blade position directly.

(f) *Fuel pressure indication.*

(1) Provisions shall be made to measure the fuel pressure, in all systems supplying reciprocating engines, at a point downstream of all fuel pumps except fuel injection pumps. (For instrument requirements see sec. 4b.604(e).)

(2) When necessary for the maintenance of the proper fuel delivery pressure, a connection shall be provided to transmit the carburetor air intake static pressure to the proper fuel pump relief valve connection. In such cases, to avoid erroneous fuel pressure reading, the gauge balance lines shall be independently connected to the carburetor inlet pressure.

Electrical Systems and Equipment

4b.620 *General.* The provisions of sections 4b.621 through 4b.627 shall apply to all electrical systems and equipment. (See also sec. 4b.606.)

4b.621 *Electrical system capacity.* The required generating capacity and the number and type of power sources shall be determined by an electrical load analysis and shall comply with section 4b.606 (c).

4b.622 *Generating system.*

(a) The generating system shall be considered to include electrical power sources, main power busses, transmission cables, and associated control, regulation, and protective devices.

(b) The generating system shall be so designed that the power sources function properly both when connected in combination and independently, and the failure or malfunctioning of any power source cannot create a hazard or impair the ability of the remaining sources to supply essential loads.

(c) Means accessible in flight to appropriate crew members shall be provided for the independent disconnection of each electrical power source from the system. Controls for this purpose shall be grouped to permit expeditious disconnection of electrical power sources.

(d) Means shall be provided to indicate to appropriate crew members those generating system quantities which are essential for the safe operation of the system.

NOTE: The voltage and current supplied by each generator are quantities considered essential.

4b.622–1 *Generating system reliability (FAA policies which apply to sec. 4b.622 (b)).* Generating systems should be analyzed, inspected or tested to assure conformance to the following reliability criteria:

(a) *Failure of propulsion engines or other prime movers.* The generating system performance (after failure of one or more propulsion engines or other prime movers) should be that specified in section 4b.606 (c).

(b) *Generating system malfunctions.* No probable malfunction [37] in the generating system, or in the generator drive system,[38] should result in the permanent loss of service to electric utilization systems [39] which are necessary to maintain controlled flight and to effect a safe landing,[40] unless the aircraft is equipped with an independent source of electric power

---

[37] A probable malfunction is any single electrical or mechanical malfunction or failure which is considered probable on the basis of past service experience with similar components in aircraft applications. This definition should be extended to multiple malfunctions when: (1) the first malfunction would not be detected during normal operation of the system, including periodic checks established at intervals which are consistent with the degree of hazard involved, or (2) the first malfunction would inevitably lead to other malfunctions.

[38] The generator drive system includes the prime movers (propulsion engines or other) and coupling devices such as gear-boxes or constant-speed drives.

[39] An electric utilization system is a system of electric equipment, devices and connected wiring which utilizes electric energy to perform a specific aircraft function.

[40] The specific electric utilization systems which are necessary to maintain controlled flight and effect a safe landing will vary with the type of aircraft and with the nature of the operation in which the aircraft is utilized. Examples of systems which may be in this category are as follows: basic flight instruments, minimum navigation equipment, minimum two-way radio communications, control system boost.

capable of supplying continuous emergency service to these utilization systems.

(c) *Corrective action.* Where corrective action is necessary to comply with (a) and (b) above,

(1) Adequate warning should be provided for any malfunction or failure requiring such corrective action.

(2) Controls should be so located as to permit such corrective action during any probable flight situation.

(3) If corrective action must be taken within a specified time interval for continued safe operation of the generating system, it should be demonstrated that such corrective action can be accomplished within the specified time interval during any probable flight situation.

(4) The procedure to be followed by the crew should be detailed in the Operating Procedures Section of the Airplane Flight Manual (see sec. 4b.740).

(d) *Electric system smoke and fire procedures (see sec. 4b.371 (c)).* To cope with electrical smoke or fire of undetermined origin, generating system controls should be designed to permit electrical disconnection of overheated equipment in flight without hazardous interruption of service to electric utilization systems. Procedures for this purpose should be contained in the Operating Procedures Section of the Airplane Flight Manual (see sec. 4b.740).

(22 F. R. 6885, Aug. 27, 1957, effective Sept. 15, 1957.)

4b.623 *Distribution system.*

(a) The distribution system shall be considered to include all distribution busses, their associated feeders, and control and protective devices.

(b) Individual distribution systems shall be designed to insure that essential load circuits can be supplied in the event of reasonably probable faults or open circuits.

(c) Where two independent sources of electrical power for particular equipment or systems are required by the Civil Air Regulations, their electrical energy supply shall be assured.

NOTE: Various means may be used to assure a supply, such as duplicate electrical equipment, throw-over switching, and multi-channel or loop circuits separately routed.

4b.624 *Electrical protection.*

(a) Automatic protective devices shall be provided to minimize distress to the electrical system and hazard to the airplane in the event of wiring faults or serious malfunctioning of the system or connected equipment.

(b) In the generating system the protective and control devices shall be such as to de-energize and disconnect faulty power sources and power transmission equipment from their associated busses with sufficient rapidity to provide protection against hazardous overvoltage and other malfunctioning.

(c) All resettable type circuit protective devices shall be so designed that when an overload or circuit fault exists, they will open the circuit irrespective of the position of the operating control.

(d) Protective devices or their controls used in essential load circuits shall be accessible for resetting in flight.

(e) Circuits for essential loads shall have individual circuit protection.

NOTE: This provision does not necessarily require individual protection for each circuit in an essential load system (e. g., each position light in the system).

(f) If fuses are used, there shall be provided spare fuses for use in flight equal to at least 50 percent of the number of fuses of each rating required for complete circuit protection.

4b.624–1 *Automatic reset circuit breaker (FAA policies which apply to sec. 4b.624).* Automatic reset circuit breakers (which automatically reset themselves periodically) should not be applied as circuit protective devices.[41] They may be used as integral protectors for electrical equipment (e. g., thermal cut-outs) provided that circuit protection is also installed to protect the cable to the equipment.

(20 F. R. 2280, Apr. 8, 1955, effective Apr. 30, 1955.)

[41] Circuit protective devices are normally installed to limit the hazardous consequences of overloaded or faulted circuits. These devices are resettable (circuit breakers) or replaceable (fuses) to permit the crew to restore service when nuisance trips occur or when the abnormal circuit condition can be corrected in flight. If the abnormal circuit condition can *not* be corrected in flight, the decision to restore power to the circuit involves a careful analysis of the flight situation. It is necessary to weigh the essentiality of the circuit for continued safe flight against the hazards of resetting on a possibly faulted circuit. Such evaluation is properly an aircraft crew function which can not be performed by automatic reset circuit breakers. To assure crew supervision over the reset operation, circuit protective devices should be of such design that a manual operation is required to restore service after tripping.

4b.625 *Electrical equipment and installation.*

(a) In showing compliance with section 4b.606 (a) and (b) with respect to the electrical system, equipment, and installation, consideration shall be given to critical environmental conditions.

NOTE: Critical environmental conditions may include temperature, pressure, humidity, ventilation, position, acceleration, vibration, and presence of detrimental substances.

(b) All electrical equipment, controls, and wiring shall be so installed that operation of any one unit or system of units will not affect adversely the simultaneous operation of any other electrical unit or system of units essential to the safe operation of the airplane.

(c) Cables shall be grouped, routed, and spaced so that damage to essential circuits will be minimized in the event of faults in heavy current-carrying cables.

(d) Storage batteries shall be of such design and be so installed that:

(1) Safe cell temperatures and pressures are maintained during any probable charging or discharging condition. No uncontrolled increase in cell temperature shall result when the storage battery is recharged (after previous complete discharge) at maximum regulated voltage, during a flight of maximum duration, under the most adverse cooling conditions likely to occur in service. Tests to demonstrate compliance with this regulation shall not be required if satisfactory operating experience with similar batteries and installations has shown that maintaining safe cell temperatures and pressures presents no problem.

(2) Explosive or toxic gases emitted by the storage battery in normal operation, or as the result of any probable malfunction in the charging system or battery installation, shall not accumulate in hazardous quantities within the airplane.

(3) Corrosive fluids or gases which may be emitted or spilled from the storage battery shall not damage the surrounding airplane structure or adjacent essential equipment.

4b.625–1 *Environmental tests for electrical equipment*[42] *(FAA policies which apply to sec. 4b.625 (a)).* The ability of electrical equipment to provide continuous safe service under foreseeable environmental conditions may be demonstrated by means of environmental tests, design analyses, or reference to previous comparable service experience on other aircraft. For environmental testing, the test procedures contained in appendix I of this manual are acceptable, subject to the following objective criteria:

(a) The extremes of climatic and environmental conditions given in appendix I may be reduced in specific aircraft applications when it can be shown that these extremes would not be reached in normal service. Conversely, these extremes should be extended when individual applications indicate the need, such as may occur when electrical equipment is exposed to high intensity acoustic noise generated by turbo-jet engines.

(b) In all cases the ability of the equipment to safely withstand exposure to temperature extremes, temperature shock, humidity, altitude, vibration, flight and normal landing impact shocks, and acceleration should be demonstrated. Tests for each of these conditions are set forth in appendix I. Tests in environments such as sand and dust, fungus and saltspray may be limited to equipment likely to be exposed to these conditions.

(c) Electrical equipment altitude testing should be conducted at an altitude 15 percent above the maximum altitude to which the equipment would be exposed in normal service. However, testing of certain equipment installed in pressurized areas should be under conditions of altitude and time which will assure that, in case of rapid decompression:

(1) Equipment necessary for the execution of an emergency descent would remain operative for the probable period required for such descent.

(2) Other equipment is not rendered permanently inoperative if the operation of the equipment is necessary to maintain controlled flight or effect a safe landing.

[42] This policy applies to all electrical generation, distribution, and utilization equipment required by or utilized in complying with the applicable Civil Air Regulations, except those items covered by Technical Standard Orders containing environmental test procedures.

(3) No equipment will constitute a hazard due to arcing, fire, or smoke. However, altitude testing for hazard from arcing, fire, or smoke is not required where any hazard is satisfactorily minimized independently of altitude by design and installation features.

(23 F. R. 10325, Dec. 25, 1958, effective Jan. 31, 1959.)

4b.626 *Electrical system fire and smoke protection.* The design and installation of all components of the electrical system shall be in compliance with pertinent fire and smoke protection provisions of sections 4b.371 (c), 4b.385, and 4b.490. In addition, all electrical cables, terminals, and equipment which are necessary in emergency procedures and which are located in designated fire zones shall be fire-resistant.

4b.626–1 *Fire-resistant electrical equipment*[43] *(FAA policies which apply to sec. 4b.626).* When applied to the electrical equipment and components defined in the last sentence of section 4b.626, an accepted criterion for "fire resistant" is that such equipment and components, as installed in the aircraft, should withstand a 2000° F. oxidizing flame impinging on their surfaces for at least 5 minutes without adverse effect on their circuit function.[44] The 2000° F. oxidizing flame should envelop the equipment under test, using a test setup simulating the actual aircraft installation.[44a] Thermocouples for measurement of flame temperature should be located within one-fourth inch of the surface exposed to the flame.

(22 F. R. 6885, Aug. 27, 1957, effective Sept. 15, 1957; amended in 23 F. R. 2790, Apr. 26, 1958, effective May 5, 1958.)

4b.627 *Electrical system tests and analyses.* It shall be demonstrated by tests and analyses that the electrical system functions properly and without electrical or thermal distress.

[43] This policy establishes a basic test standard for fire-resistant electrical equipment located in designated fire zones. However, installation approval may be granted for equipment which does not conform to this standard, if it can be shown that such equipment would provide equivalent safety if exposed to the probable fire conditions at its particular location.

[44] Excessive temperature may affect electrical equipment and components by causing such malfunctions as short circuit, open circuit, and changes in circuit parameters (for example, reduced insulation resistance and dielectric strength).

[44a] In the case of electric cable, only a representative length, not less than 12 inches, need be enveloped in the flame.

4b.628 *Lightning strike protection.* Those portions of the airplane which are electrically insulated from the main body of the airplane shall be connected to the basic airframe through appropriate lightning arrestors, unless it is shown that a lightning strike on the insulated portion is improbable because of the shielding afforded by other portions of the airplane, or unless it is shown that a lightning strike on the insulated portion would not create a hazard to the airplane or its occupants.

Lights

4b.630 *Instrument lights.*

(a) Instrument lights shall provide sufficient illumination to make all instruments, switches, etc., easily readable.

(b) Instrument lights shall be so installed that their direct rays are shielded from the pilot's eyes and so that no objectionable reflections are visible to him.

(c) A means of controlling the intensity of illumination shall be provided, unless it is shown that non-dimmed instrument lights are satisfactory under all expected conditions of flight.

4b.631 *Landing lights.*

(a) Landing lights shall be of an approved type.

(b) Landing lights shall be installed so that there is no objectionable glare visible to the pilot and so that the pilot is not adversely affected by halation.

(c) Landing lights shall be installed in a location where they provide the necessary illumination for night landing.

(d) A switch for each light shall be provided, except that where multiple lights are installed at one location a single switch for the multiple lights shall be acceptable.

(e) A means shall be provided to indicate to the pilots when the landing lights are extended.

4b.632 *Position light system installation.*

(a) *General.* The provisions of sections 4b.632 through 4b.635 shall be applicable to the position light system as a whole. The position light system shall include the items specified in paragraphs (b) through (d) of this section.

(b) ***Forward position lights.*** **Forward position lights shall consist of a red and a green light spaced laterally as far apart as practicable and installed forward on an airplane in such a location that, with the airplane in normal flying position, the red light is displayed on the left side and the green light is displayed on the right side. The individual lights shall be of an approved type.**

(c) ***Rear position light.*** **The rear position light shall consist of a white light mounted on the airplane as far aft as practicable. The light shall be of an approved type.**

(d) ***Light covers and color filters.*** **Light covers or color filters used shall be of flame-resistant material and shall be constructed so that they will not change color or shape or suffer any appreciable loss of light transmission during normal use.**

4b.632–1 *Red passing lights (FAA policies which apply to sec. 4b.632 (a)).* When it is desired to improve the conspicuity of the aircraft a steady red light, commonly known as a passing light, may be installed. This light is not considered to be a position light and therefore need not be type certificated. When installed, its location should be one of the following:

(a) Within the left landing light unit.

(b) On the centerline of the aircraft nose.

(c) In the leading edge of the left wing, outboard of the propeller disc.

(16 F. R. 3212, Apr. 12, 1951, effective Apr. 15, 1951.)

4b.633 *Position light system dihedral angles.* **The forward and rear position lights as installed on the airplane shall show unbroken light within dihedral angles specified in paragraphs (a) through (c) of this section.**

(a) Dihedral angle L (left) shall be considered formed by two intersecting vertical planes, one parallel to the longitudinal axis of the airplane and the other at 110° to the left of the first, when looking forward along the longitudinal axis.

(b) Dihedral angle R (right) shall be considered formed by two intersecting vertical planes, one parallel to the longitudinal axis of the airplane and the other at 110° to the right of the first, when looking forward along the longitudinal axis.

(c) Dihedral angle A (aft) shall be considered formed by two intersecting vertical planes making angles of 70° to the right and 70° to the left, respectively, looking aft along the longitudinal axis, to a vertical plane passing through the longitudinal axis.

4b.634 *Position light distribution and intensities.*

(a) *General.* The intensities prescribed in this section are those to be provided by new equipment with all light covers and color filters in place. Intensities shall be determined with the light source operating at a steady value equal to the average luminous output of the light source at the normal operating voltage of the airplane. The light distribution and intensities of position lights shall comply with the provisions of paragraphs (b) and (c) of this section.

(b) *Forward and rear position lights.* The light distribution and intensities of forward and rear position lights shall be expressed in terms of minimum intensities in the horizontal plane, minimum intensities in any vertical plane, and maximum intensities in overlapping beams, within dihedral angles L, R, and A, and shall comply with the provisions of subparagraphs (1) through (3) of this paragraph.

(1) *Intensities in horizontal plane.* The intensities in the horizontal plane shall not be less than the values given in figure 4b–18. (The horizontal plane is the plane containing the longitudinal axis of the airplane and is perpendicular to the plane of symmetry of the airplane).

(2) *Intensities above and below horizontal.* The intensities in any vertical plane shall not be less than the appropriate value given in figure 4b–19, where I is the minimum intensity prescribed in figure 4b–18 for the corresponding angles in the horizontal plane. (Vertical planes are planes perpendicular to the horizontal plane.)

(3) *Overlaps between adjacent signals.* The intensities in overlaps between adjacent signals shall not exceed the values given in figure 4b–20, except that higher intensities in the overlaps shall be acceptable with the use of main beam intensities substantially greater than the minima specified in figures 4b–18 and 4b–19 if the overlap intensities in relation to the main

beam intensities are such as not to affect adversely signal clarity.

Dihedral angle (light involved)	Angle from right or left of longitudinal axis, measured from dead ahead	Intensity (candles)
L and *R* (forward red and green)	0° to 10°	40
	10° to 20°	30
	20° to 110°	5
A (Rear white)	110° to 180°	20

Figure 4b–18.—Minimum intensities in the horizontal plane of forward and rear position lights.

Angle above or below horizontal	Intensity
0°	1.00 I.
0° to 5°	.90 I.
5° to 10°	.80 I.
10° to 15°	.70 I.
15° to 20°	.50 I.
20° to 30°	.30 I.
30° to 40°	.10 I.
40° to 90°	At least 2 candles.

Figure 4b–19.—Minimum intensities in any vertical plane of forward and rear position lights.

Overlaps	Maximum intensity	
	Area A (candles)	Area B (candles)
Green in dihedral angle *L*	10	1
Red in dihedral angle *R*	10	1
Green in dihedral angle *A*	5	1
Red in dihedral angle *A*	5	1
Rear white in dihedral angle *L*	5	1
Rear white in dihedral angle *R*	5	1

NOTE: Area A includes all directions in the adjacent dihedral angle which pass through the light source and which intersect the common boundary plane at more than 10 degrees but less than 20 degrees. Area B includes all directions in the adjacent dihedral angle which pass through the light source and which intersect the common boundary plane at more than 20 degrees.

Figure 4b–20.—Maximum intensities in overlapping beams of forward and rear position lights.

The next figure is Figure 4b–22. (Figure 4b–21 was deleted by Amendment 4b–9.)

4b.634–1 *Overlaps between high intensity forward position lights (FAA policies which apply to sec. 4b.634 (b) (3)).* When the peak intensity of the forward position lights is greater than 100 candles, the maximum overlap intensities between them may exceed the values given in Figure 4b–20 provided the overlap intensity in Area A is not greater than 10 percent of peak position light intensity and the overlap intensity in Area B is not greater than 2.5 percent of peak position light intensity.[45]

(23 F. R. 2790, Apr. 26, 1958, effective May 5, 1958.)

4b.635 *Position light color specifications.* The colors of the position lights shall have the International Commission on Illumination chromaticity coordinates as set forth in paragraphs (a) through (c) of this section.

(a) *Aviation red.*

y is not greater than 0.335,

z is not greater than 0.002;

(b) *Aviation green.*

x is not greater than $0.440-0.320y$,

x is not greater than $y-0.170$,

y is not less than $0.390-0.170x$;

(c) *Aviation white.*

x is not less than 0.350,

x is not greater than 0.540,

$y-y_0$ is not numerically greater than 0.01, y_0 being the y coordinate of the Planckian radiator for which $x_0=x$.

4b.636 *Riding light.*

(a) When a riding (anchor) light is required for a seaplane, flying boat, or amphibian, it shall be capable of showing a white light for at least two miles at night under clear atmospheric conditions.

(b) The riding light shall be installed to show the maximum unbroken light practicable when the airplane is moored or drifting on the water. Externally hung lights shall be acceptable.

4b.637 *Anti-collision light system.* An anti-collision light system shall be installed which shall consist of one or more approved anti-collision lights so located that the emitted light will not be detrimental to the crew's vision and will not detract from the conspicuity of the position lights. The system shall comply with the provisions of paragraphs (a) through (d) of this section.

[45] Overlap intensities should be determined with the position lights installed in their actual airplane locations, since adjacent airplane structure will often provide some cutoff in the overlap area.

(a) *Field of coverage.* The system shall consist of such lights as will afford coverage of all vital areas around the airplane with due consideration to the physical configuration and the flight characteristics of the airplane. In any case, the field of coverage shall extend in all directions within 30° above and 30° below the horizontal plane of the airplane, except that a solid angle or angles of obstructed visibility totaling not more than .03 steradians shall be permissible within a solid angle equal to .15 steradians centered about the longitudinal axis in the rearward direction.

(b) *Flashing characteristics.* The arrangement of the system, i. e., number of light sources, beam width, speed of rotation, etc., shall be such as to give an effective flash frequency of not less than 40 and not more than 100 cycles per minute. The effective flash frequency shall be the frequency at which the airplane's complete anti-collision light system is observed from a distance, and shall apply to all sectors of light including the overlaps which might exist when the system consists of more than one light source. In overlaps, flash frequencies higher than 100 cycles per minute shall be permissible, except that they shall not be higher than 180 cycles per minute.

(c) *Color.* The color of the anti-collision lights shall be aviation red in accordance with the specifications of section 4b.635 (a).

(d) *Light intensity.* The minimum light intensities in all vertical planes, measured with the red filter and expressed in terms of "effective" intensities, shall be in accordance with Figure 4b–27. The following relation shall be assumed:

$$I_e = \frac{\int_{t_1}^{t_2} I(t)\,dt}{0.2 + (t_2 - t_1)};$$

where:

I_e = effective intensity (candles),

$I(t)$ = instantaneous intensity as a function of time,

$t_2 - t_1$ = flash time interval (seconds).

NOTE: Normally, the maximum value of effective intensity is obtained when t_2 and t_1 are so chosen that the effective intensity is equal to the instantaneous intensity at t_2 and t_1.

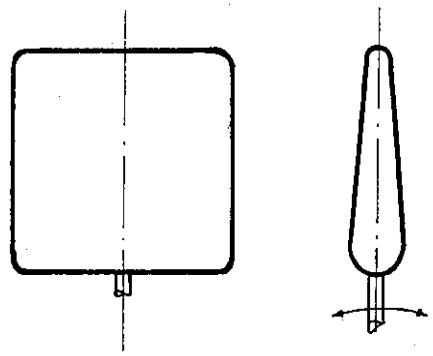

FLAP CONTROL KNOB

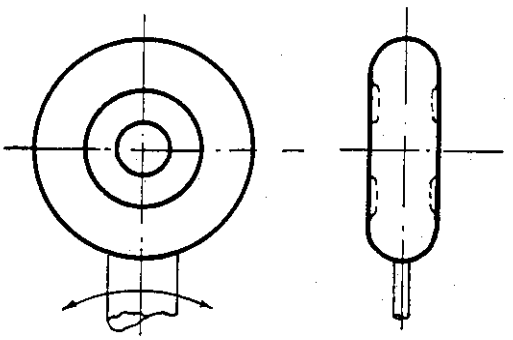

LANDING GEAR CONTROL KNOB

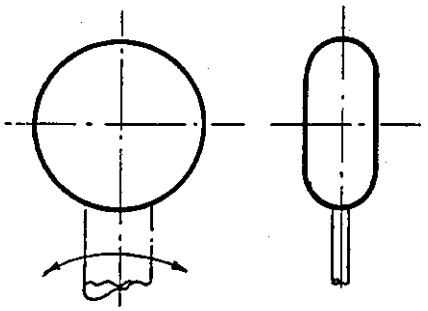

THROTTLE CONTROL KNOB

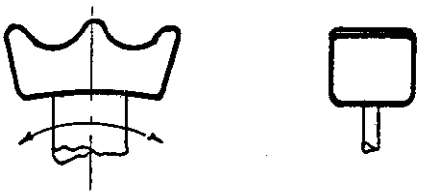

RPM CONTROL KNOB

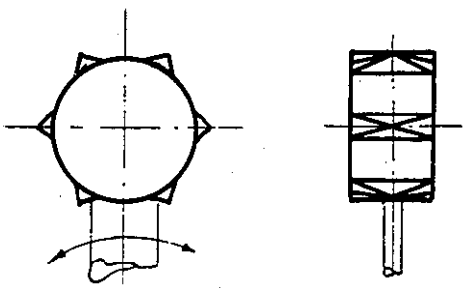

MIXTURE CONTROL KNOB

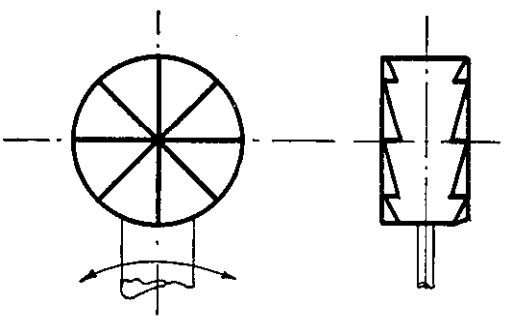

SUPERCHARGER CONTROL KNOB

Figure 4b–22.—Control knob shapes.

The next figure is Figure 4b–24a. (Figure 4b–23 was deleted by Amendment 4b–7.)

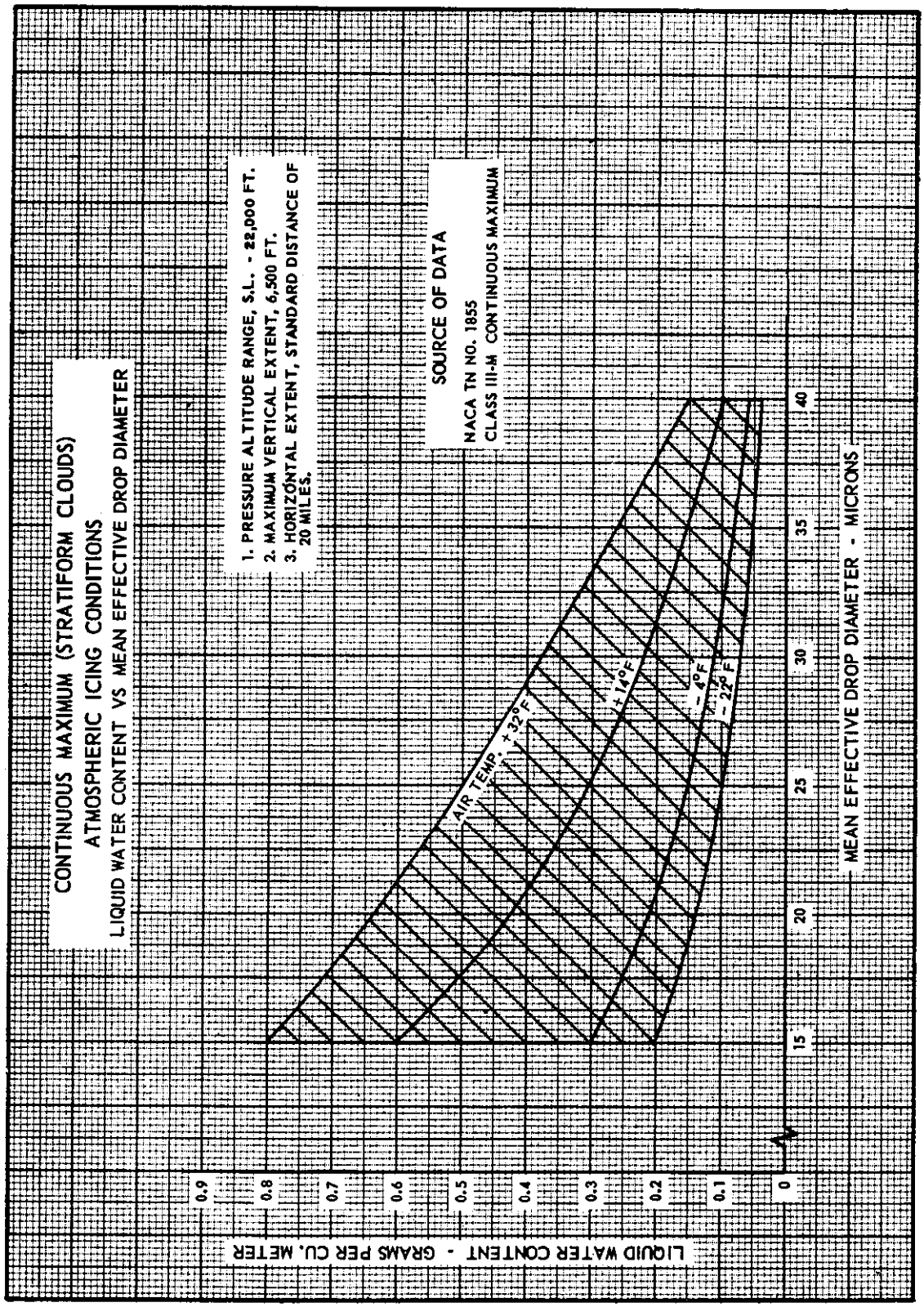

Figure 4b–24a.

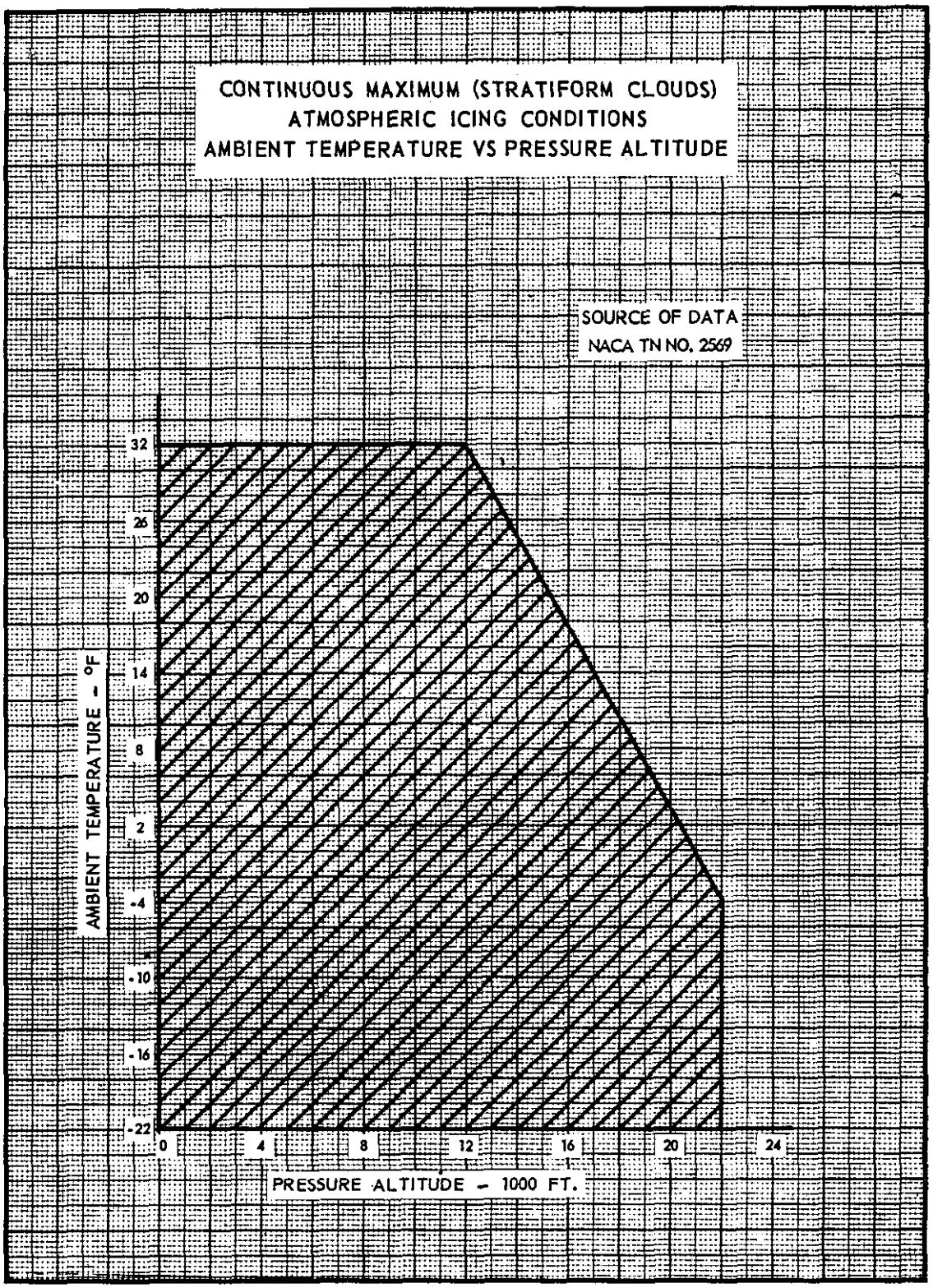

Figure 4b–24b.

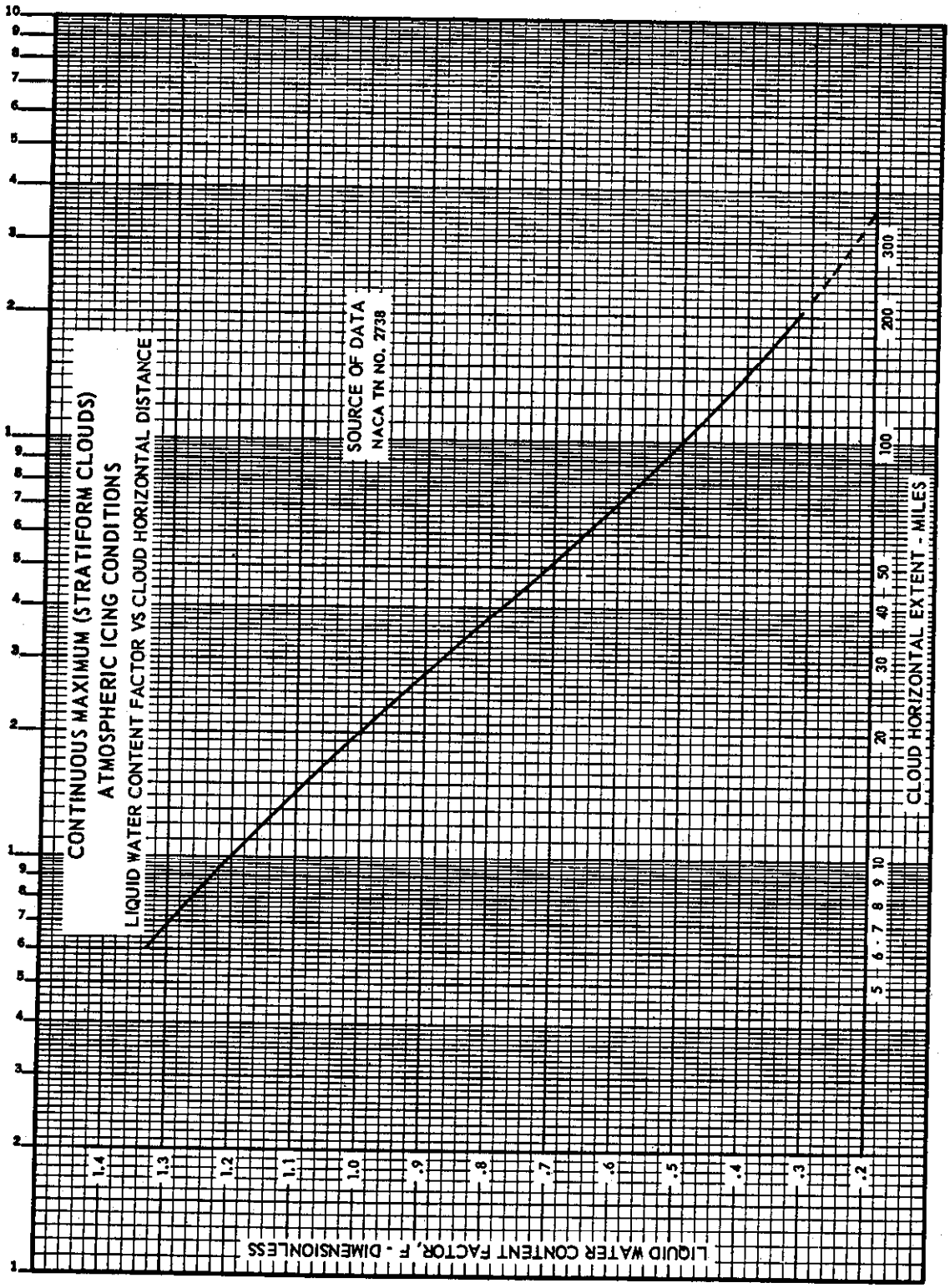

Figure 4b–24c.

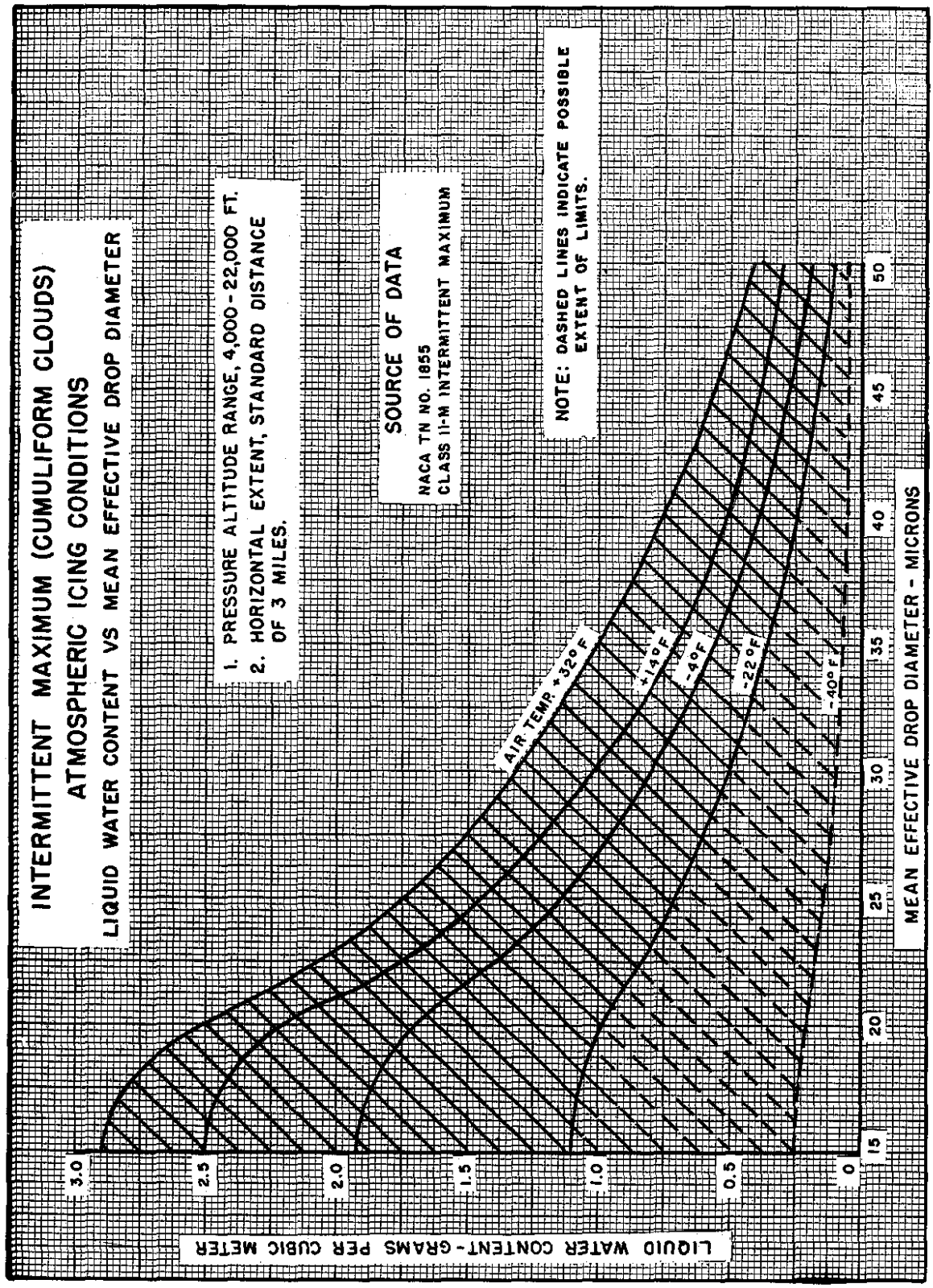

Figure 4b-25a.

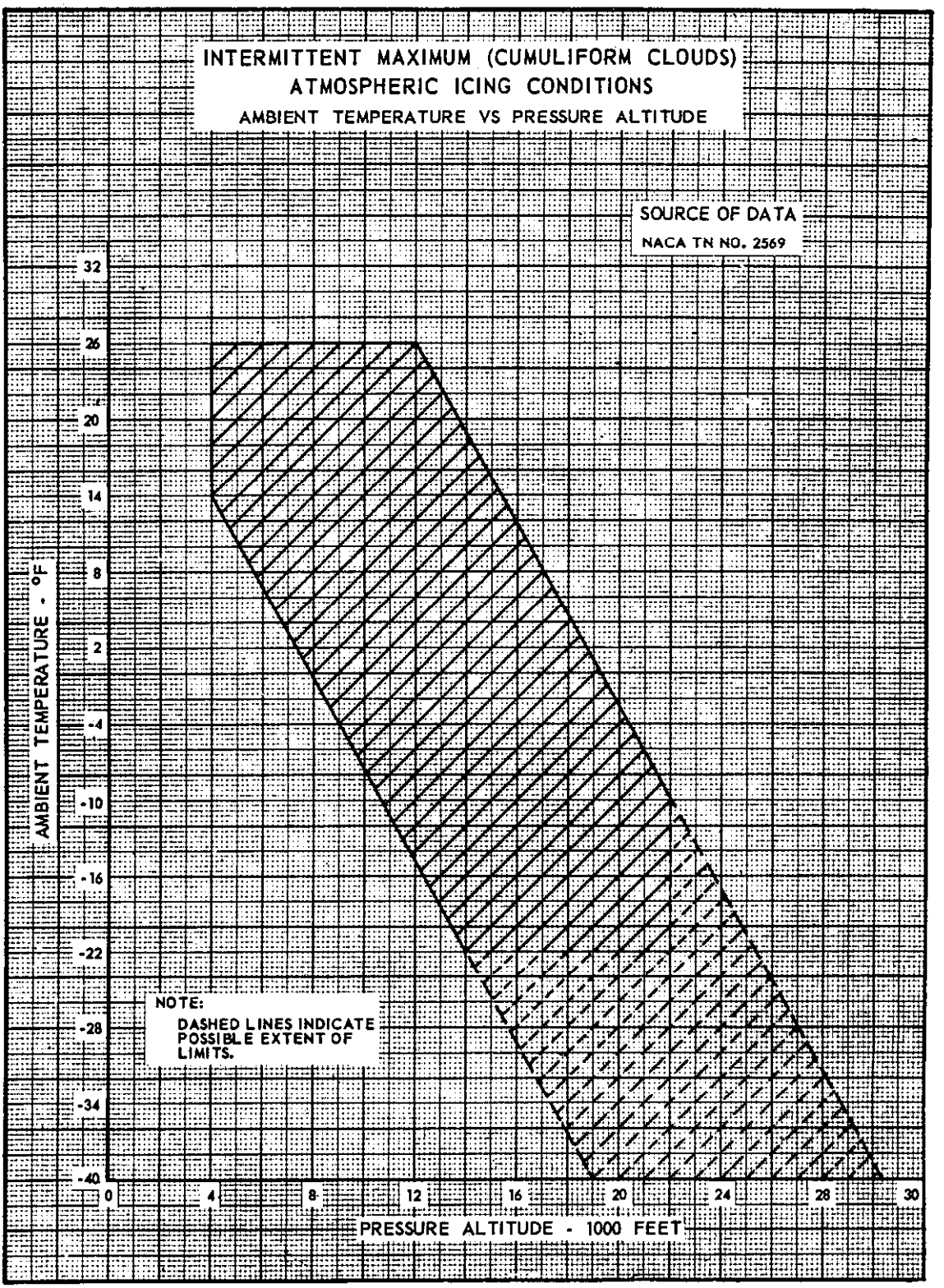

Figure 4b–25b.

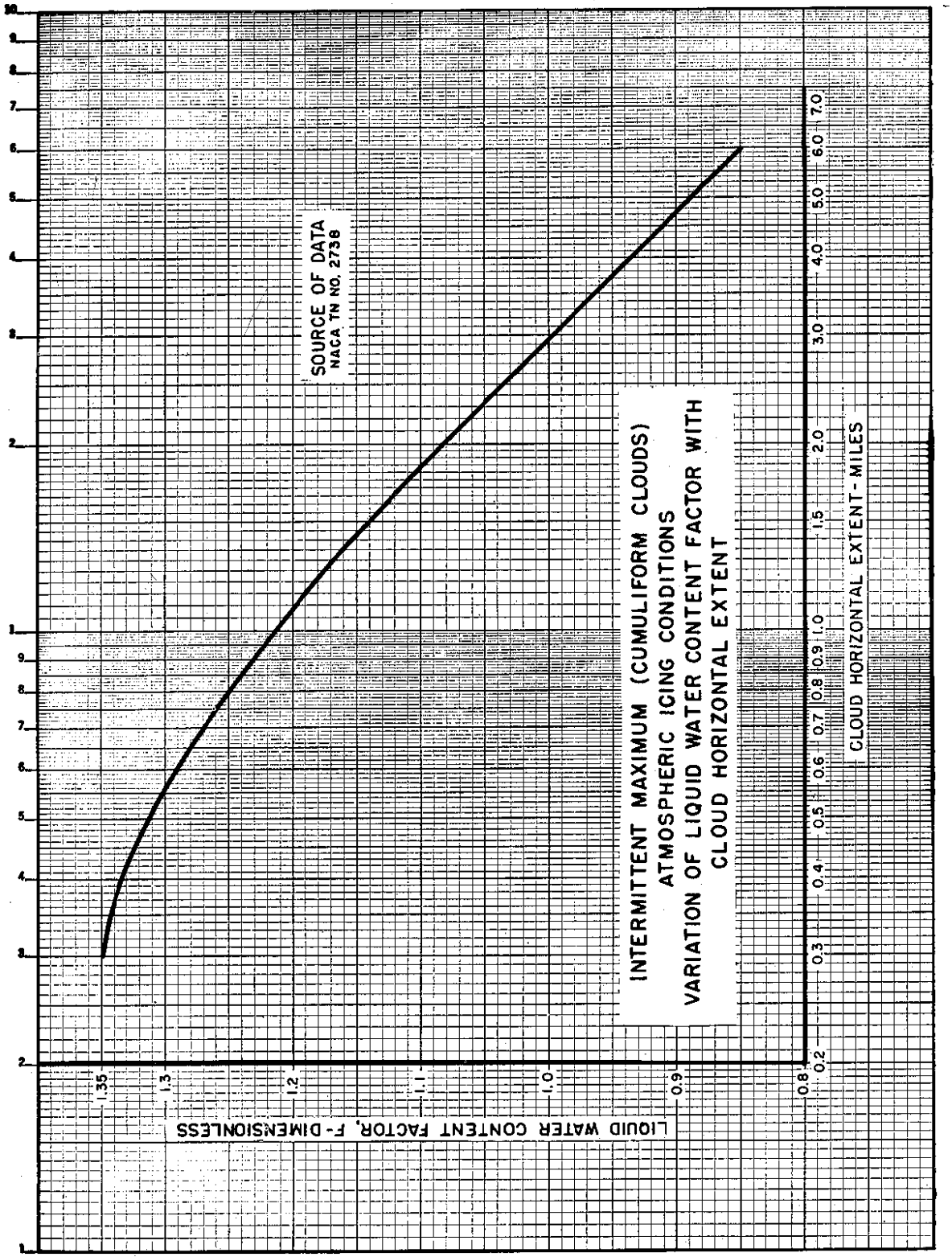

Figure 4b–25c.

Tow Point	Position	Load		
		Magnitude	No.	Direction
Main gear.		0.75 F_{TOW} per main gear unit.	1	Forward, parallel to drag axis.
			2	Forward, at 30° to drag axis.
			3	Aft, parallel to drag axis.
			4	Aft, at 30° to drag axis.
Auxiliary gear.	Swiveled forward.	1.0 F_{TOW}.	5	Forward.
			6	Aft.
	Swiveled aft.		7	Forward.
			8	Aft.
	Swiveled 45° from forward.	0.5 F_{TOW}.	9	Forward, in plane of wheel.
			10	Aft, in plane of wheel.
	Swiveled 45° from aft.		11	Forward, in plane of wheel.
			12	Aft, in plane of wheel.

BALANCING FORCES

The side component of the towing load at the main gear is reacted by a side force at the static ground line at the wheel to which load is applied.

The towing loads at the auxiliary gear and the drag components of the towing loads at the main gear are reacted in each of the following ways:

a. Reaction applied at the axle of the wheel to which load is applied, this reaction having a maximum value equal to the vertical reaction. Airplane inertia is applied as required for equilibrium.
b. The loads reacted by airplane inertia.

Figure 4b–26.—Towing Loads.

Angle above or below horizontal plane	Effective intensity (candles)
0° to 5°	100
5° to 10°	60
10° to 20°	20
20° to 30°	10

Figure 4b–27.—Minimum effective intensities for anti-collision lights.

Safety Equipment

4b.640 *Ice protection.* Compliance with this section is optional. The requirements of this section are intended to provide for safe flight in icing conditions. When compliance is shown with the provisions of this section, the type certificate shall include certification to that effect. When an airplane is certificated to include ice protection provisions, the recommended procedures for the use of the ice protection equipment shall be set forth in the Airplane Flight Manual (see sec. 4b.742 (a)). It shall be shown, as prescribed in paragraphs (a) and (b) of this section, that the airplane is capable of operating safely in continuous maximum and intermittent maximum icing conditions as defined in sections 4b.1 (b) (7) and 4b.1 (b) (8).

(a) An analysis shall be performed to establish, on the basis of the airplane's operational needs, the adequacy of the ice protection system for the various components of the airplane.

(b) In addition to the analysis and physical evaluation prescribed in paragraph (a) of this section, the effectiveness of the ice protection system and its components shall be shown by one or more of the following means:

(1) Laboratory dry air and/or simulated icing tests of the actual components or models thereof.

(2) Flight dry air tests of the ice protection system as a whole, or of its components individually.

(3) Flight tests of the airplane or its components in measured simulated icing conditions.

(4) Flight tests of the airplane in measured natural atmospheric icing conditions.

NOTE: For turbine-powered airplanes, the ice protection provisions of this section are considered to be primarily applicable to the airframe. For the powerplant installation, certain additional provisions of Subpart E of this Part may be found applicable.

4b.641 *Hand fire extinguishers.* (See secs. 4b.381, 4b.382, and 4b.383.)

4b.642 *Flare installation.*

(a) Parachute flares shall be releasable from the pilot compartment and installed to minimize the danger of accidental discharge.

(b) It shall be demonstrated in flight that the flare installation is such that ejection can be accomplished without hazard to the airplane and its occupants.

(c) If recoil loads are involved in the ejection of the flares, the structure of the airplane shall withstand such loads.

4b.642–1 *Procedure for testing flare ejection (FAA policies which apply to sec. 4b.642(b)).* When flares are released, they should clear the aircraft structure when the airplane is flown at a speed of 1.4 Vs_1 with the wing flaps and landing gear in both extended and retracted positions. If it is obvious that the flaps and gear have no effect upon the flare's path, the test may be conducted at one configuration. It is permissible to use dummy flares with parachutes for this test.

4b.643 *Safety belts.* Safety belts shall be of an approved type. In no case shall the rated strength of the safety belt be less than that corresponding with the ultimate load factors specified in section 4b.260 (a), taking due account of the dimensional characteristics of the safety belt installation for the specific seat or berth arrangement. Safety belts shall be attached so that no part of the anchorage will fail at a load lower than that corresponding with the ultimate load factors equal to those specified in section 4b.260 (a) multiplied by a factor of 1.33. In the case of safety belts for berths, the forward load factor need not be applied.

4b.644 *Safety belt signal.* When means are provided to indicate to the passengers when seat belts should be fastened, the device shall be so installed that it can be operated from the seat of either pilot or copilot.

4b.645 *Ditching equipment.* When the airplane is certificated for ditching in accordance with section 4b.361, and when required by the operating rules for the particular route to be flown, the ditching equipment shall be as prescribed in paragraphs (a) through (d) of this section.

(a) *Life rafts.* Life rafts shall be of an approved type. Unless excess rafts of sufficient capacity are provided, the buoyancy and seating capacity beyond the rated capacity of the rafts shall be such as to accommodate all occupants of the airplane in the event of a loss of one life raft of the largest rated capacity on board. Each life raft shall be equipped with a

trailing line and with a static line, the latter designed to hold the raft near the airplane but to release it in case the airplane becomes totally submerged. Each raft shall contain obvious markings of instruction on the operation of the raft.

(b) *Life raft equipment.* Approved equipment intended for survival shall be attached to each life raft and marked for identification and method of operation.

NOTE: The extent and type of survival equipment will depend upon the route over which the airplane is operated.

(c) *Long-range signalling device.* An approved long-range signalling device shall be provided for use in one of the life rafts.

(d) *Life preservers.* Life preservers shall be of an approved type.

(e) *Life line.* Provisions shall be made for the storage of life lines, one attached to each side of the fuselage and arranged so that they can be used to enable occupants to stay on the wing after a ditching.

4b.646 *Stowage of safety equipment.* Special stowage provisions shall be made for all prescribed safety equipment to be used in emergencies. The stowage provision shall be such that the equipment is directly accessible and its location is obvious. All safety equipment shall be protected against inadvertent damage. The stowage provisions shall be marked conspicuously to identify the contents and to facilitate removal of the equipment. In addition, the following shall specifically apply:

(a) *Emergency exit means.* The stowage provisions for the emergency exit means required by section 4b.362 (e) (7) shall be located at the exits which they are intended to serve.

(b) *Life rafts.* The provisions for the stowage of life rafts required by section 4b.645 (a) shall accommodate a sufficient number of rafts for the maximum number of occupants for which the airplane is certificated for ditching. Stowage shall be near exits through which the rafts can be launched during an unplanned ditching. Rafts automatically or remotely released on the outside of the airplane shall be attached to the airplane by means of the static line prescribed in section 4b.645 (a).

(c) *Long-range signalling device.* The stowage provisions for the long-range signalling device required by section 4b.645 (c) shall be located near an exit to be available during an unplanned ditching.

(d) *Life preservers.* The provisions for the stowage of life preservers required by section 4b.645 (d) shall accommodate one life preserver for each occupant for which the airplane is certificated for ditching. They shall be located so that a life preserver is within easy reach of each occupant while seated.

4b.647 *Flotation means.* If the airplane is not equipped with life preservers in accordance with section 4b.645(d), an approved individual flotation means shall be provided for each occupant. Such flotation means shall be within easy reach of each occupant while seated and readily removable from the airplane.

Miscellaneous Equipment

4b.650 *Radio and electronic equipment.* (a) In showing compliance with section 4b.606 (a) and (b) with respect to radio and electronic equipment and their installations, consideration shall be given to critical environmental conditions.

NOTE: Critical environmental conditions may include temperature, pressure, humidity, ventilation, position, acceleration, vibration, and presence of detrimental substances.

(b) Radio and electronic equipment shall be supplied with power in accordance with the provisions of section 4b.623 (c).

(c) All radio and electronic equipment, controls, and wiring shall be so installed that operation of any one unit or system of units will not affect adversely the simultaneous operation of any other radio or electronic unit or system of units required by the regulations in this subchapter.

4b.651 *Oxygen equipment and supply.* When required by the operating rules of the regulations in this subchapter, the supplemental and protective breathing equipment and its installation shall meet the following requirements:

(a) *General.* The oxygen system installed shall be free from hazards in itself, in its method of operation, and in its effect upon other compo-

nents of the airplane. Means shall be provided to enable the crew to determine readily during flight the quantity of oxygen available in each source of supply. For airplanes certificated for operation at flight altitudes above 40,000 feet, oxygen flow rate and equipment shall be approved by the Administrator.

(b) *Required minimum mass flow of supplemental oxygen.* The minimum mass flow of supplemental oxygen required per person at various cabin pressure altitudes shall be that necessary to comply with the following requirements as applicable:

(1) Where continuous flow equipment is used by flight crew members, the minimum mass flow of supplemental oxygen required for each crew member shall not be less than that which will maintain during inspiration a mean tracheal oxygen partial pressure of 149 mm. Hg. when breathing 15 liters per minute, BTPS, and having a maximum tidal volume of 700 cc. with a constant time interval between respirations.

(2) Where demand equipment is used by flight crew members, the minimum mass flow of supplemental oxygen required for each crew member shall not be less than that which will maintain during inspiration a mean tracheal oxygen partial pressure of 122 mm. Hg. to and including a cabin pressure altitude of 35,000 feet and 95 percent oxygen between cabin pressure altitudes of 35,000 and 40,000 feet, when breathing 20 liters per minute BTPS. Provision shall be made to allow use of undiluted oxygen by crew members when they so desire.

(3) For passengers and cabin attendants the minimum mass flow of supplemental oxygen required for each person at various cabin pressure altitudes shall not be less than that which will maintain during inspiration the following mean tracheal oxygen partial pressures when using the oxygen equipment provided, including masks:

(i) At cabin pressure altitudes above 10,000 feet to and including 18,500 feet, a mean tracheal oxygen partial pressure of 100 mm. Hg. when breathing 15 liters per minute, BTPS, and having a tidal volume of 700 cc. with a constant time interval between respirations.

(ii) At cabin pressure altitudes above 18,500 feet to and including 40,000 feet, a mean tracheal oxygen partial pressure of 83.8 mm. Hg. when breathing 30 liters per minute, BTPS, and having a tidal volume of 1,100 cc. with a constant time interval between respirations.

(4) Where first-aid oxygen equipment is required, the minimum mass flow of oxygen to each user shall not be less than 4 liters per minute, STPD, except that means may be provided to decrease this flow to not less than 2 liters per minute, STPD, at any cabin altitude. The quantity of oxygen required shall be based upon an average flow rate of 3 liters per minute per person for whom first-aid oxygen is required.

(5) Where portable oxygen equipment is required for crew members, the minimum mass flow of supplemental oxygen shall be as specified in section 4b.651 (b) (1) or (2), whichever is applicable.

(c) *Equipment standards for distribution system.* Where oxygen is to be supplied to both crew and passengers, the distribution system shall be designed to provide either:

(1) A source of supply for the flight crew on duty and a separate source for the passengers and other crew members, or

(2) A common source of supply with means provided so that the minimum supply required by the flight crew on duty can be separately reserved.

(d) *Equipment standards for dispensing units.* Where oxygen dispensing units are required, they shall comply with the provisions of subparagraphs (1) through (3) of this paragraph.

(1) An individual dispensing unit shall be provided for each occupant for whom supplemental oxygen is required to be furnished. All units shall be designed to cover the nose and mouth and shall be equipped with a suitable means for retaining the unit in position on the face for use. Flight crew masks for supplemental oxygen shall provide for the use of communication equipment. (For crew masks to be used for protective breathing purposes, see paragraph (h) of this section.)

(2) In airplanes certificated to operate at flight altitudes to and including 25,000 feet,

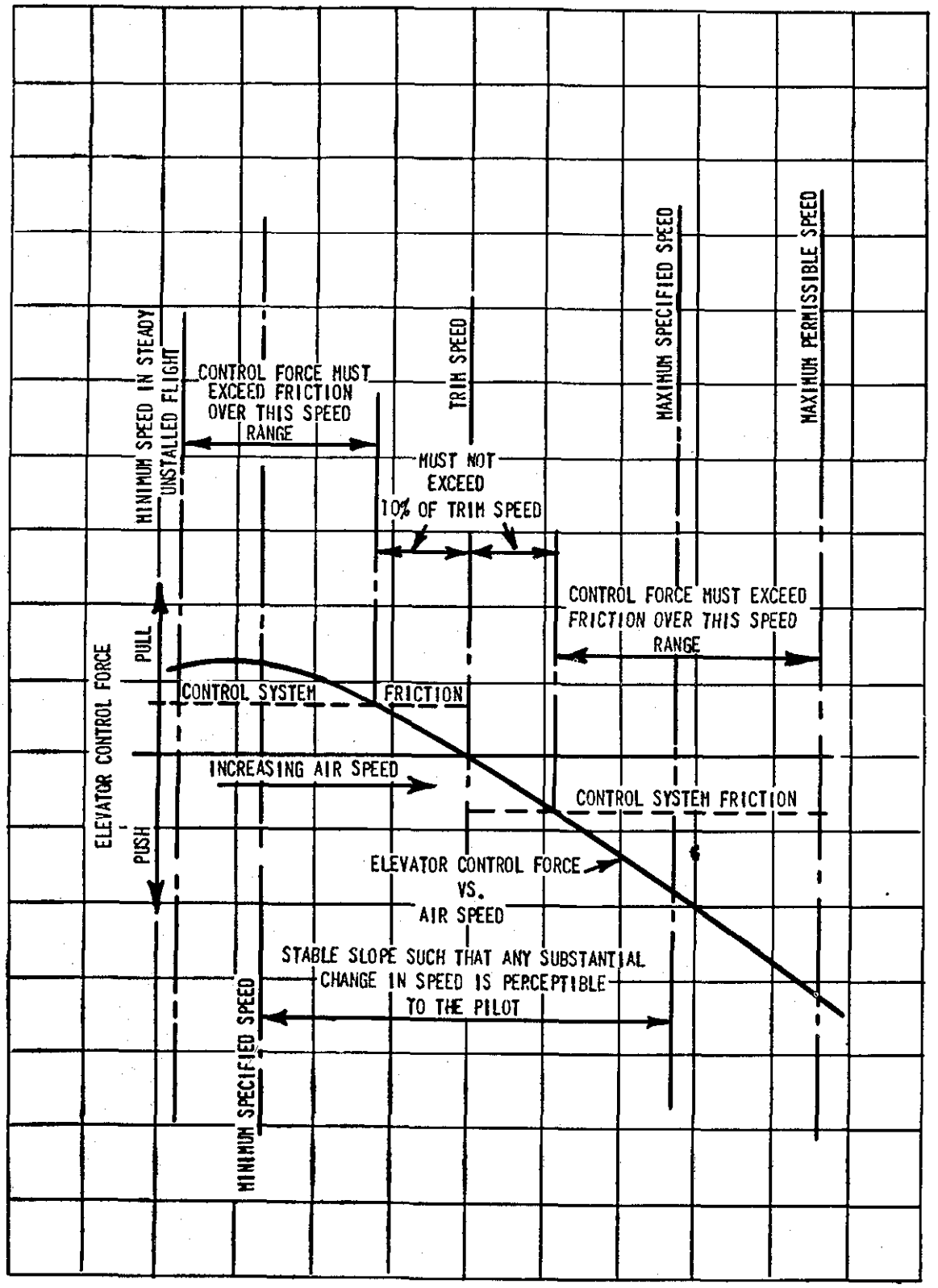

Figure 3.—Static longitudinal stability requirements.

542115 O—60——15

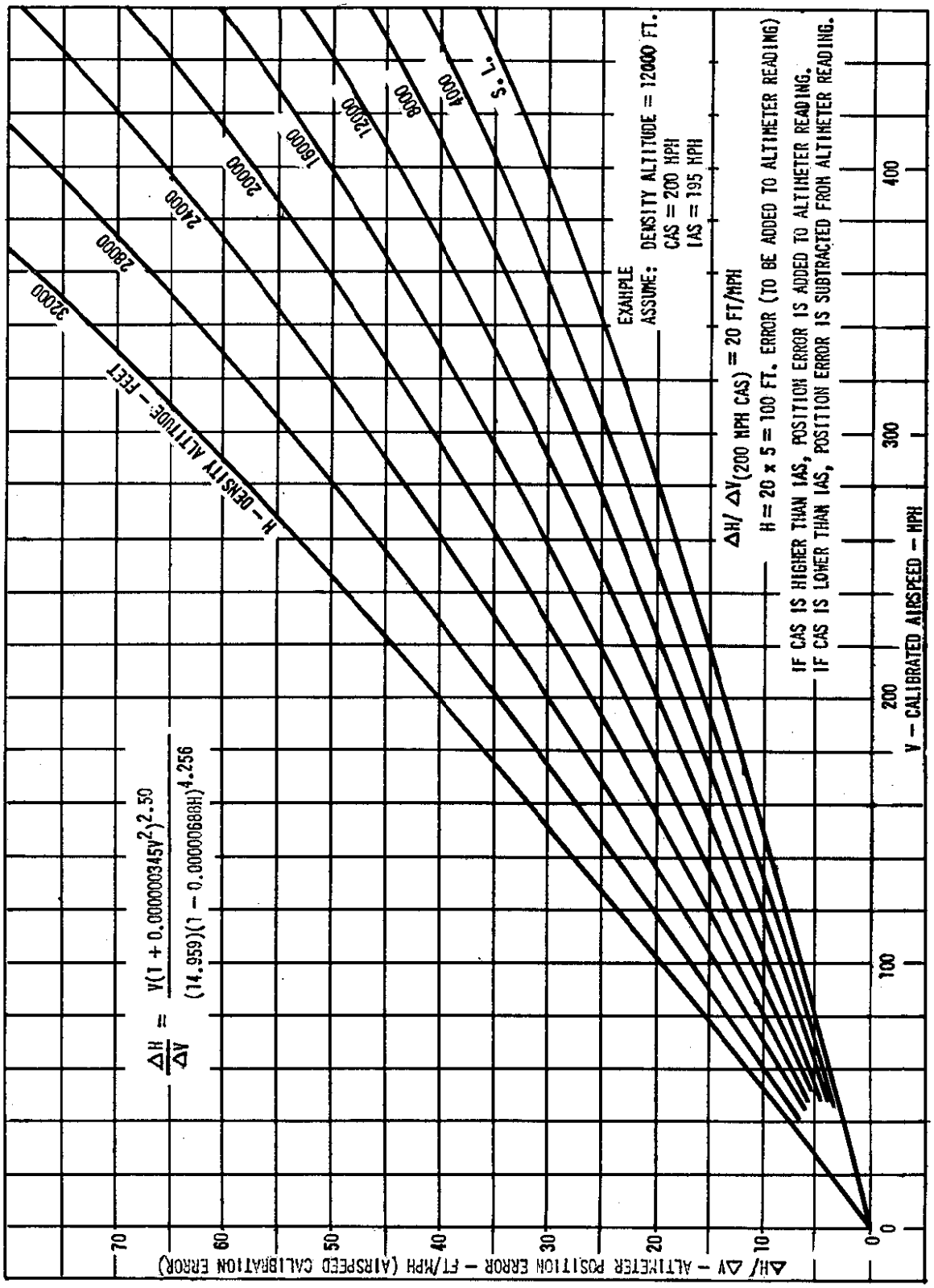

Figure 4.—Altimeter position error.

(22 F.R. 5793, July 20, 1957 effective Aug. 15, 1957.)

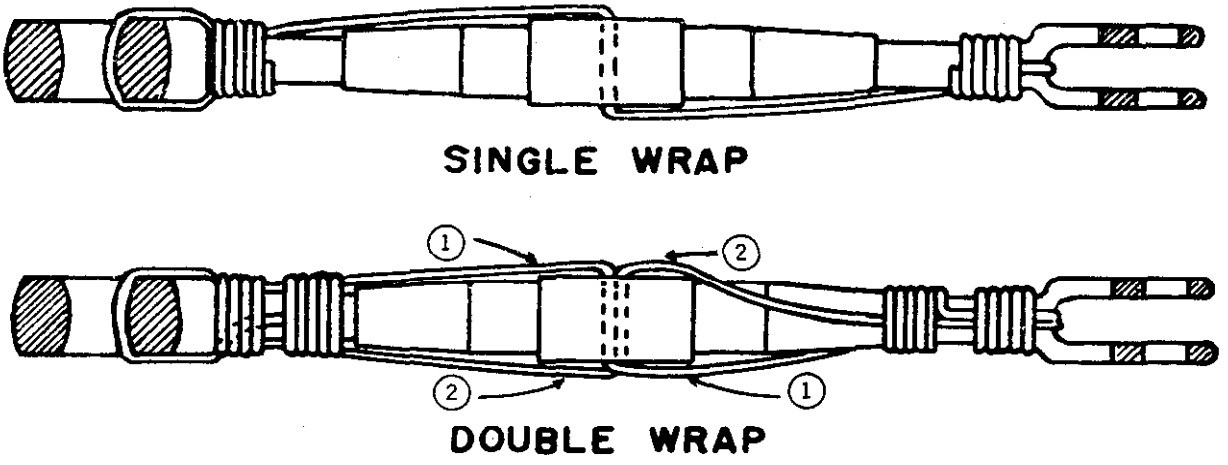

Figure 5.—Turnbuckle safety wiring.

1. Wire 1 is passed through the turnbuckle hole as shown, the two wire ends are passed through the right and left hand ends of the turnbuckle and are then bent back along the barrel of the turnbuckle.
2. Wire 2 is installed and wrapped (these wraps are next to the ends of the turnbuckle).
3. The two loose ends of wire 1 are then wrapped.

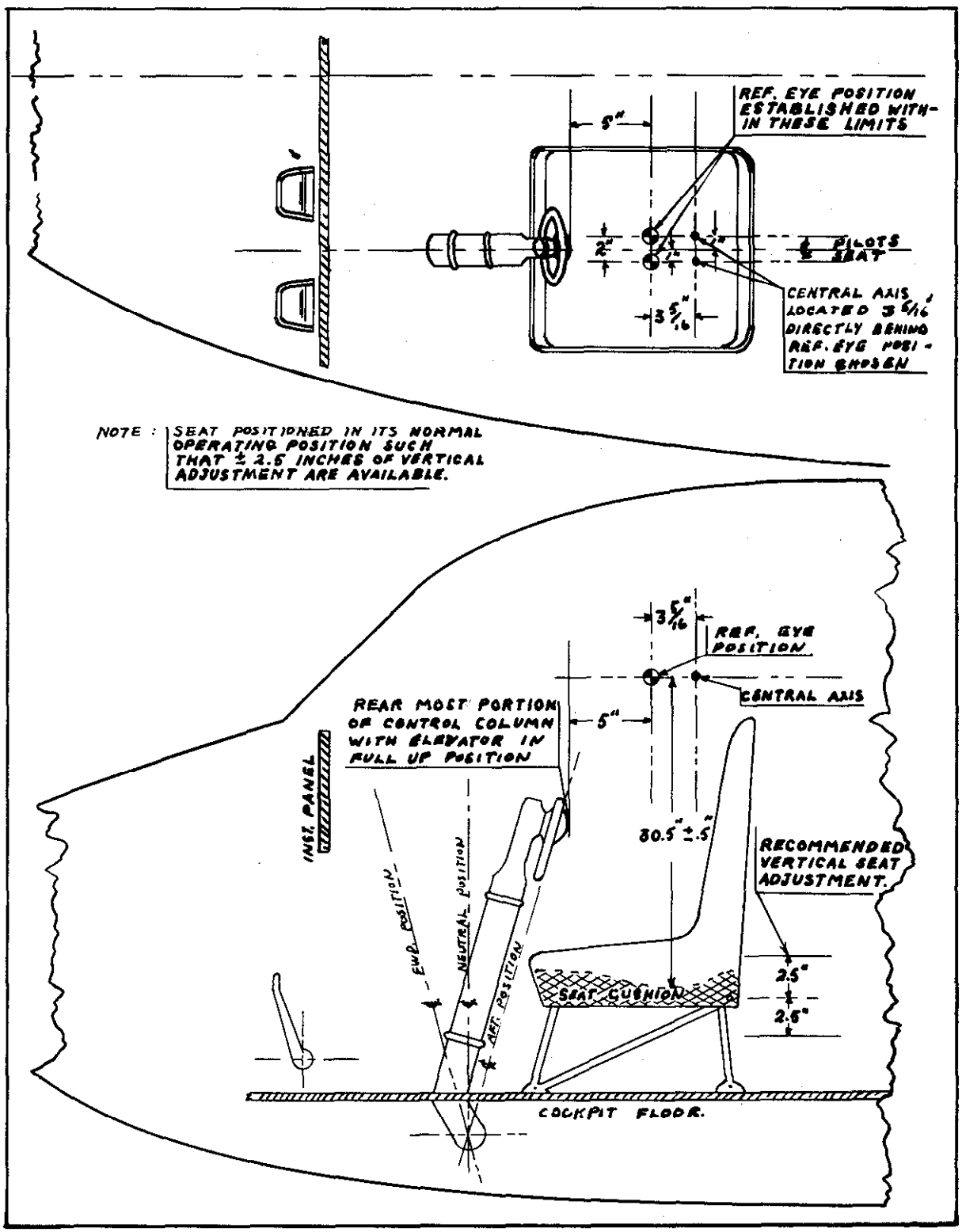

Figure 6.—Reference eye position.

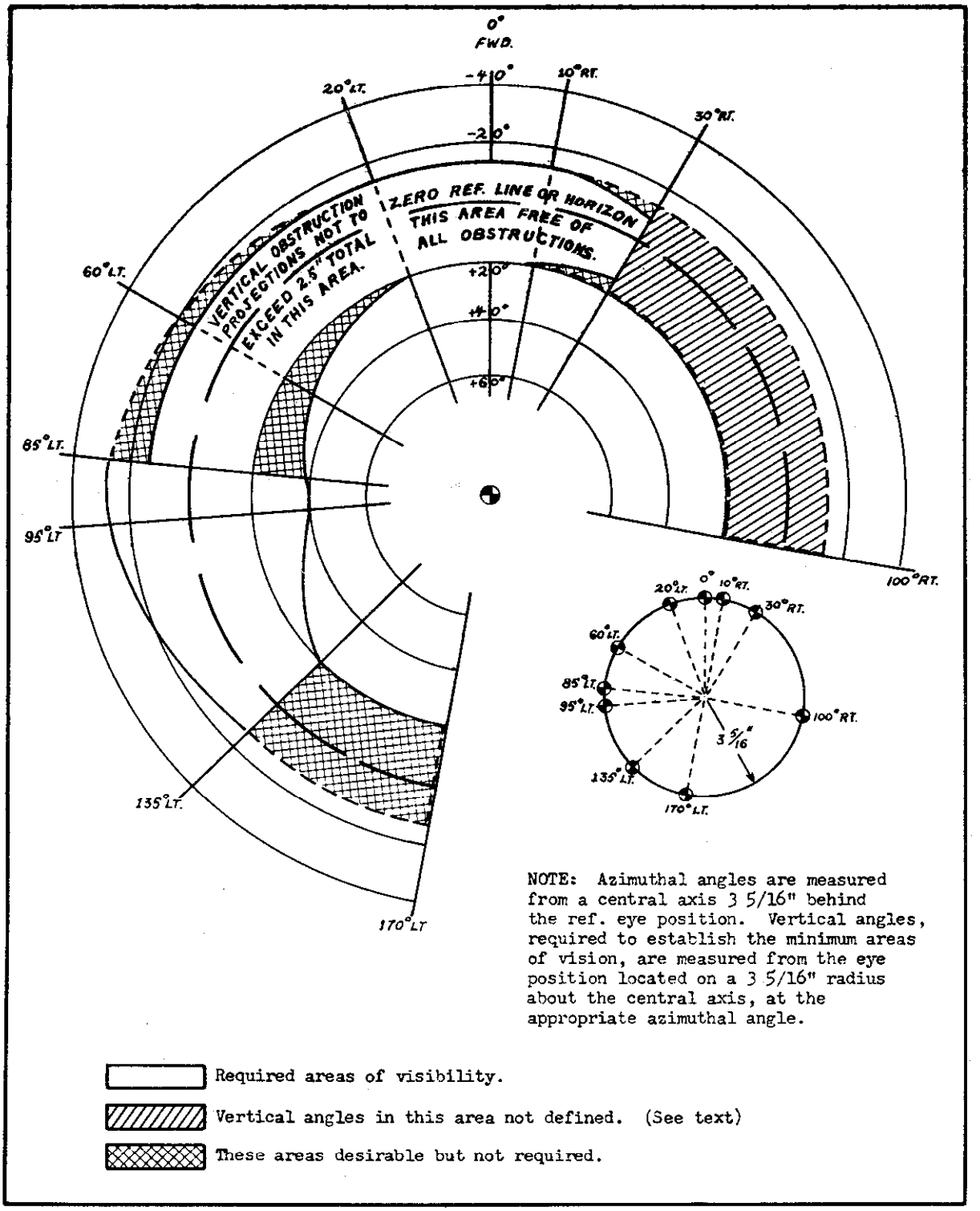

Figure 7.—Clear areas of vision.

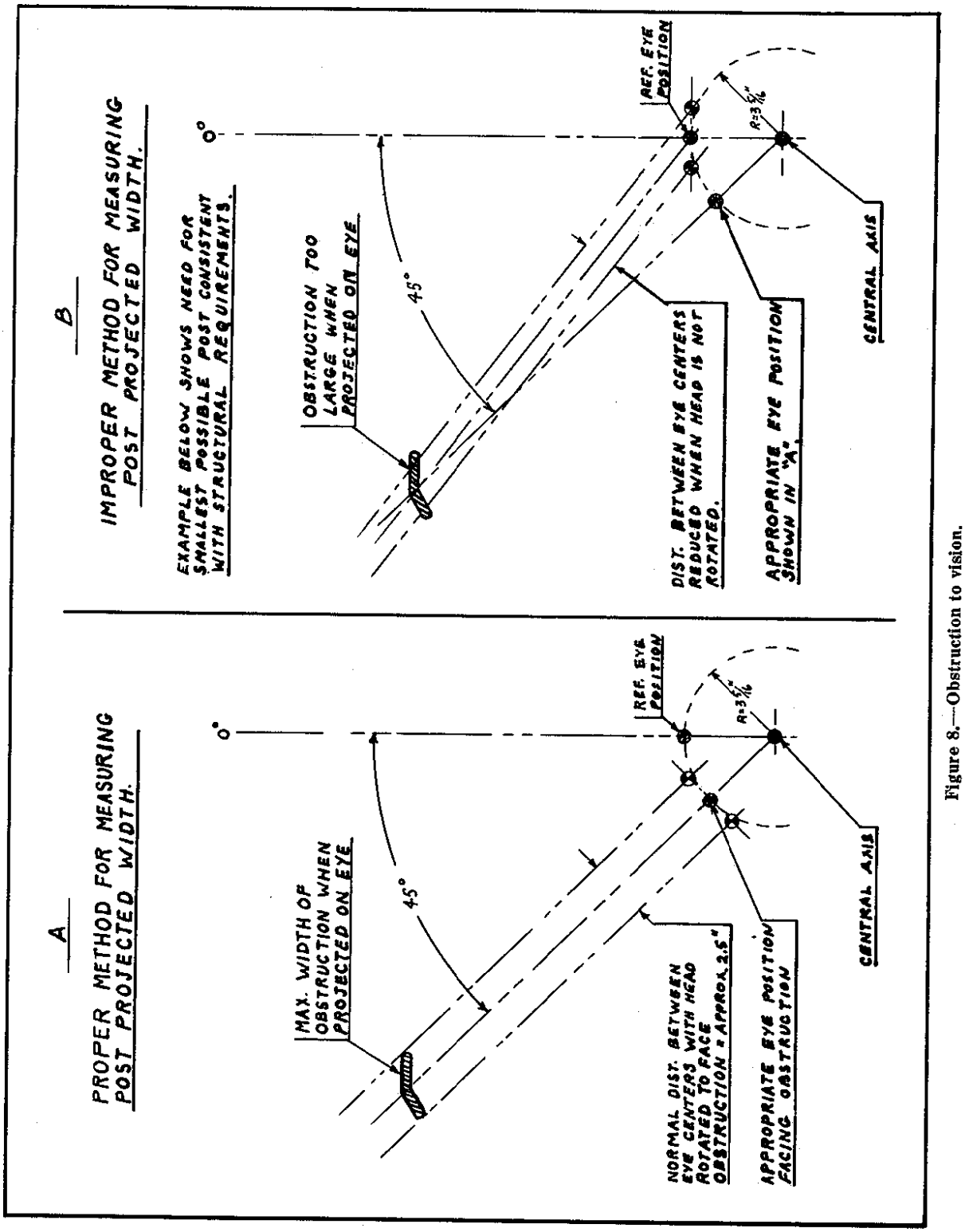

Figure 8.—Obstruction to vision.

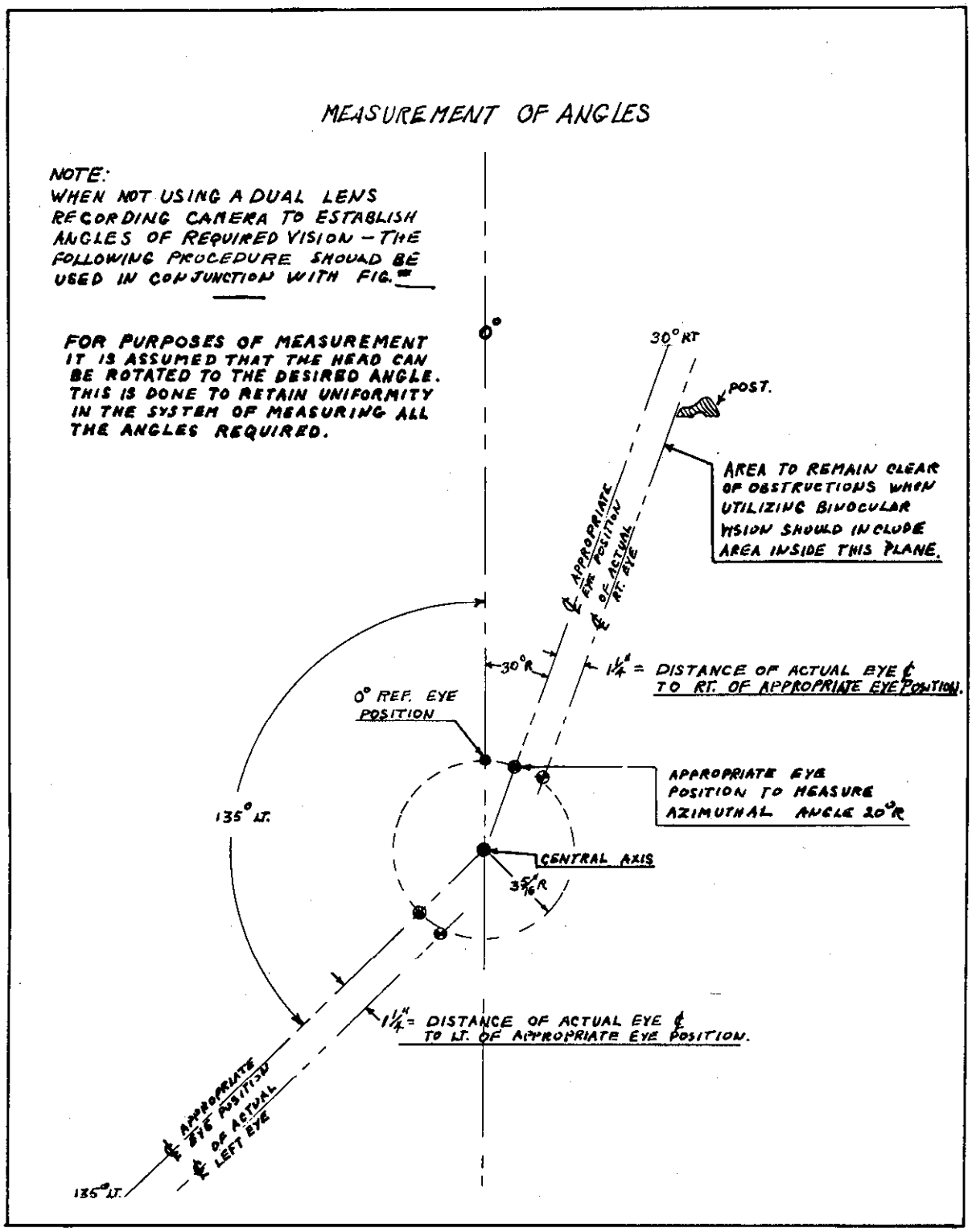

Figure 9.—Measurement of angles.

there shall be available to and within reach of each flight crew member an oxygen supply terminal and unit of oxygen dispensing equipment to provide for the immediate use of oxygen by such crew member. For all other occupants the supply terminals and dispensing equipment shall be located so as to permit the use of oxygen as required by the operating rules of the regulations in this subchapter.

(3) In airplanes certificated to operate above 25,000 feet flight altitude, the provisions of subdivisions (i) through (iv) of this subparagraph shall apply:

(i) An oxygen dispensing unit connected to oxygen supply terminals shall be immediately available to each occupant wherever seated. In addition, in airplanes certificated to operate above 30,000 feet, the dispensing units providing the required oxygen flow rate shall be automatically presented to the occupants. To insure that sufficient dispensing units and outlets are available for all occupants, the total number shall exceed the number of seats by at least 10 percent with the extra units being as uniformly distributed throughout the cabin as practicable;

(ii) Crew members on flight deck duty shall be provided with demand equipment. An oxygen dispensing unit connected to an oxygen supply terminal shall be immediately available to each flight crew member when seated at his station;

(iii) Not less than two outlets and units of dispensing equipment of a type similar to that required by section 4b.651(d)(3)(i) shall be located in each washroom; and in each lavatory if separate from the washroom; and

(iv) Portable oxygen equipment shall be immediately available for each cabin attendant.

(e) *Means for determining use of oxygen.* Means shall be provided to enable the crew to determine whether oxygen is being delivered to the dispensing units.

(f) *Fire protection.*

(1) Oxygen equipment and lines shall not be located in any designated fire zone.

(2) Oxygen equipment and lines shall be protected from heat which may be generated in or escape from any designated fire zone.

(3) Oxygen equipment and lines shall be so installed that escaping oxygen cannot cause ignition of accumulations of grease, fluids, or vapors which are likely to be present in normal operation or as a result of failure or malfunctioning of any system.

(g) *Protection from rupture.* Oxygen pressure tanks and lines between tanks and the shutoff means shall be protected from the effects of unsafe temperatures, and shall be so located in the airplane as to minimize the possibility and the hazards of rupture in a crash landing.

(h) *Protective breathing system.* When protective breathing equipment is required by the Civil Air Regulations, it shall be designed to protect the flight crew from the effects of smoke, carbon dioxide, and other harmful gases while on flight deck duty and while combating fires in cargo compartments (see sec. 4b.380(c)). The protective breathing equipment and the necessary supply of oxygen shall be in accordance with the following provisions:

(1) The protective breathing equipment shall include masks covering the eyes, nose, and mouth, or only the nose and mouth when accessory equipment is provided to protect the eyes. Such equipment while in use shall not prevent the flight crew from using the radio equipment of the airplane or from communicating with each other while at their assigned duty stations. That part of the equipment provided to protect the eyes shall be of a type and construction which will not cause any appreciable adverse effect on vision and shall permit wearing corrective glasses by individual members of the flight crew.

(2) A supply of protective oxygen per crew member shall be of 15-minute duration at a pressure altitude of 8,000 feet and a respiratory minute volume of 30 liters per minute BTPD.

NOTE: When a demand type oxygen system is employed, a supply of 300 liters of free oxygen at 70° F. and 760 mm. Hg. pressure is considered to be of 15-minute duration at the prescribed altitude and minute volume. When a continuous flow protective breathing system is used, including a mask with a standard rebreather bag, a flow rate of 60 liters per minute at 8,000 feet (45 liters per minute at sea level) and a supply of 600 liters of free oxygen at 70° F. and 760 mm Hg. pressure is considered to be of 15-minute duration at prescribed altitude and minute volume. (BTPD refers

Appendix B

Performance Tests

Item	CAR ref. No.	Test description	Wt.	C. G.	Altitude	Flap	Landing gear	Engines						Test	Special instrumentation
								Operating			Inoperative				
								Prop.	Power	Cowl flap	Prop.	Throtl.	Cowl flap		
1	§4b.612 (a)	Airspeed calibration	Between max. T. O. and max. land.	Opt.	Opt. greater than one span length	Retr.	Retr.	Opt.	Opt.	Opt.	----------	----------	----------	Airspeed indicating system should be calibrated over speed range from 1.3 V_{s_1} to V_{NO} or to max. cont. power whichever is lower.	Reference airspeed system or speed course.
						Land.	Ext.	Opt.	Opt.	Opt.	----------	----------	----------	Airspeed indicating system should be calibrated over speed range from 1.3 V_{s_0} to V_{FE} or max. level flight speed with max. cont. power whichever is lower.	
		Ground speed calibration	T. O.	----------	----------	T. O.	Ext.	T. O.	T. O.	T. O.	Wind milling in T. O. pitch	Closed	T. O.	Airspeed indicating system should be calibrated during ground run between 0.8 minimum value of V_1 to maximum value of V_2.	May be conducted during test item 5 with instrumentation for test item 4.
2 (a)	§4b.110	Engine calibration T. O. power	Opt.	Opt.	Opt.	T. O.	Retr.	T. O.	T. O.	T. O.	----------	----------	----------	Climb should be conducted at V_2 speed with appropriate M. P. until full throttle and then at F. T. through the desired altitude range for engine calibration data.	Instrumentation for measuring humidity.
(b)	§4b.110	Engine calibration max. cont. power	Opt.	Opt.	Opt.	All eng. en route climb	Retr.	Max. cont.	Max. cont.	All eng. en route climb position	----------	----------	----------	Same as above procedure except climb should be conducted at en route climb speed.	
3	§4b.112	Stalling speeds	Max. land. or max. at req'd c. g. position	Most fwd or varying	Opt.	En route T. O. appr. land.	Retr. Retr. Retr. Ext.	Opt.	Zero thrust or less	Closed	----------	----------	----------	Stalls should be conducted at each flap setting with not more than sufficient power for zero thrust at a speed not greater than 110% of the stalling speed.	Reference airspeed system or suitable calibrated system, instrument photo-recorder.
4	§4b.115	Accelerate to V_1 and stop distance	Max. T. O. and one lower	Most fwd [1]	S. L. to 2,000 ft.	T. O.	Ext.	T. O.	T. O.	T. O.	Windmilling in T. O. pitch [2]	Closed	T. O.	Airplane should be accelerated to V_1 speed, all engines cut and brought to a stop.	Graphically recording vertical and horizontal distance-time instrumentation, wind velocity, direction and humidity meteorological instrumentation.
5	§4b.116 (a)	Accelerate to V_2	Max. T. O. and one lower	Most fwd	S. L. to 2,000 ft.	T. O.	Ext.	T. O.	T. O.	T. O.	Windmilling in T. O. pitch [2]	Closed	T. O.	Airplane should be accelerated to V_1 one engine cut and acceleration continued to V_2. (If V_1 is less than V_2 a demonstration takeoff should be made at max. T. O. weight conditions.)	Same as item 4.
6 (a)	§ 4b.120 (a)	Climb initial T. O. segment	Max. T. O. and one lower	Opt.	Two opt. altitudes	T. O.	Ext.	T. O. [3]	T. O. [3]	T. O.	Windmilling in T. O. pitch [2]	Closed	T. O.	See §§ 4b.116-2 (b) (2) and 4b.118-1....	Instrumentation for measuring humidity.

For footnotes, see p.

Performance Tests—Continued

Item	CAR ref. No.	Test description	Wt.	C. G.	Altitude	Flap	Landing gear	Engines						Test	Special instrumentation
								Operating			Inoperative				
								Prop.	Power	Cowl flap	Prop.	Throtl.	Cowl flap		
6 (b)	§ 4b.120 (b)	Climb 2d T. O. segment	Max. T. O. and one lower	Opt.	Two opt. altitudes	T. O.	Retr.	T. O.[2]	T. O.[2]	T. O.	Windmilling in T. O. pitch[3]	Closed	T. O.	See §§ 4b.116-2 (b) (3) and 4b.118-1.	Instrumentation for measuring humidity—Con.
(c)	§ 4b.116 (d)	Climb 3d T. O. segment	Max. T. O. and one lower	Opt.	Two opt. altitudes	T. O.	Retr.	T. O.[2]	T. O.[2]	T. O.	Feath.	Closed	Opt.	See §§ 4b.116-2 (b) (4) and 4b.118-1.	
(d)	§ 4b.116 (e)	Climb 4th T. O. segment	Max. T. O. and one lower	Opt.	Two opt. altitudes	T. O.	Retr.	Max. cont.	Max. cont.	T. O.	Feath.	Closed	Opt.	See §§ 4b.116-2 (b) (5) and 4b.118-1.	
(e)	§ 4b.119 (a)	Climb cruising config. all engs.	Max. T. O. and one lower	Opt.	Two opt. altitudes	Opt.	Retr.	Max. cont.	Max. cont.	FAA hot day cooling position	----------	----------	----------	See §§ 4b.118-1 and 4b.119-1 (a).	
(f)	§ 4b.120 (c)	Climb en route one eng. inop.	Max. T. O. and one lower	Opt.	Two opt. altitudes	Opt.	Retr.	Max. cont.	Max. cont.	FAA hot day cooling	Feath.	Closed	Opt.	See §§ 4b.118-1 and 4b.120-2 (c).	
(g)	§ 4b.121	Climb two engs. inop.	Two opt. wts.	Opt.	Two opt. altitudes	Opt.	Retr.	Max. cont.	Max. cont.	FAA hot day cooling	Feath.	Closed	Opt.	See §§ 4b.118-1 and 4b.121-1.	
(h)	§ 4b.120 (d)	Climb approach	Max. land. and one lower	Opt.	Two opt. altitudes	Appr.	Retr.	T. O.[2]	T. O.[2]	Appr.	Feath.	Closed	Opt.	See §§ 4b.118-1 and 4b.120-2 (d).	
(i)	§ 4b.119 (b)	Climb landing	Max. land. and one lower	Opt.	Two opt. altitudes	Land.	Ext.	T. O.[2]	T. O.[2]	Appr.	----------	----------	----------	See §§ 4b.118-1 and 4b.119-1 (b).	
7	§ 4b.122 § 4b.123	Landing distance	Max. land. and one lower	Most fwd.	S. L. to 2,000 ft.	Land.	Ext.	Opt.	Opt.	Appr.	----------	----------	----------	Landings over 50' obstacle should be conducted to establish the landing distance.	Same as item 4.

NOTES

[1] C. G. should be in the most aft position for demonstration with reverse thrust propeller.
[2] Tests involving takeoff power may be demonstrated using maximum continuous power if additional tests are run at a lower power to determine effects of slipstream.
[3] Propeller should be in feathered position if automatic feathering device is installed.

Flying Qualities

Item	CAR ref. No.	Test description	Wt.	C. G.	Altitude	Flap	Landing gear	Engines						Test	Special instrumentation
								Operating			Inoperative				
								Prop.	Power	Cowl flap	Prop.	Throtl.	Cowl flap		
8 (a)	§ 4b.131 (a)	Long. control recovery to 1.4 V_{s_1} power on	Max. T. O. Max. land.	Most aft	Opt.	Retr. Ext.	Ext.	Max. cont.	Max. cont.	Opt.	----------	----------	----------	Prompt recovery to 1.4 V_{s_1} should be demonstrated from any speed between V_{s_1} and 1.4 V_{s_1} when airplane is pitched down.	
(b)	§ 4b.131 (a)	Long. control recovery to 1.4 V_{s_1} power off	Max. T. O. Max. land.	Most aft	Opt.	Retr. Ext.	Ext.	Opt.	Off	Opt.	----------	----------	----------	Same as test 8 (a).	
(c)	§ 4b.131 (b) (1)	Long. control sudden changes in flaps power off	Max. land.	Most fwd. and most aft	Opt.	Retr.	Ext.	Opt.	Off	Opt.	----------	----------	----------	One hand controllability should be demonstrated when flaps are extended rapidly without change in trim control.	
(d)	§ 4b.131 (b) (2)	Long. control sudden changes in flaps power off	Max. land.	Most fwd. and most aft	Opt.	Ext.	Ext.	Opt.	Off	Opt.	----------	----------	----------	One hand controllability should be demonstrated when flaps are retracted rapidly without change in trim control.	
(e)	§ 4b.131 (b) (3)	Long. control sudden changes in flaps power on	Max. land.	Most fwd. and most aft	Opt.	Ext.	Ext.	T. O.	T. O.	Opt.	----------	----------	----------	Test 8 (d) should be repeated with T. O. power.	
(f)	§ 4b.131 (b) (4)	Long. control sudden changes in power flaps retr.	Max. land.	Most fwd. and most aft	Opt.	Retr.	Ext.	Opt.	Off	Opt.	----------	----------	----------	One hand controllability should be demonstrated when T. O. power is applied quickly without change in trim control.	
(g)	§ 4b.131 (b) (5)	Long. control sudden changes flaps ext.	Max. land.	Most fwd. and most aft	Opt.	Ext.	Ext.	Opt.	Off	Opt.	----------	----------	----------	Test 8 (f) should be repeated with flaps extended.	
(h)	§ 4b.131 (b) (6)	Long. control variation in airspeed	Max. land.	Most fwd	Opt.	Ext.	Ext.	Opt.	Off	Opt.	----------	----------	----------	One hand controllability should be demonstrated throughout speed range of 1.1 V_{s_1} to 1.7 V_{s_1} or to V_{FE} without change in trim control.	
(i)	§ 4b.131 (c)	Long. control flap retraction	Max. land.	Most fwd. and most aft	Opt.	Ext.	Ext.	Opt.	Off	Opt.	----------	----------	----------	It should be possible to prevent altitude loss when flaps are retracted with simultaneous application of M. C. power.	
9 (a)	§ 4b.132 (a)	Directional control sudden changes in heading	Max. land.	Most aft	Opt.	Appr.	Retr.	Opt.	Power for level flight at 1.4 V_{s_1} but not more than max. cont.	Opt.	Feath.	Closed	Opt.	Satisfactory controllability should be demonstrated when sudden heading changes are executed in either direction with wings level.	Rudder force indicator if force is critical.

Flying Qualities—Continued

Item	CAR ref. No.	Test description	Wt.	C. G.	Altitude	Flap	Landing gear	Engines						Test	Special instrumentation
								Operating			Inoperative				
								Prop.	Power	Cowl flap	Prop.	Throtl.	Cowl flap		
9 (b)	§ 4b.132 (b)	Directional control sudden *changes* in heading	Max. land.	Most fwd.	Opt.	Climb	Retr.	Opt.	Power for level flight at 1.4 V_{s_1} but not *more than* max. cont.	Opt.	Feath.	Closed	Opt.	Test 9 (a) should be repeated with 2 crit. engs. inop.	Same as item 9 (a).
(c)	§ 4b.132 (c)	Lateral control 20° banked turns	Max. T. O.	Most aft	Opt.	Climb	Retr. and ext.	Max. cont.	Max. cont.	Opt.	Feath.	Closed	Opt.	20° banked turns with and against inoperative engine should be demonstrated from steady climb at speed of 1.4 V_{s_1}.	Bank angle indicator.
(d)	§ 4b.132 (d)	Lateral control 20° banked turns	Max. land.	Most *fwd.*	Opt.	Climb	Retr.	Max. *cont.*	Power for *level flight* at 1.4 V_{s_1} but not more than max. cont.	Opt.	Feath.	Closed	Opt.	Test 9 (c) should be repeated with 2 *crit. engs. inop.*	Same as item 9 (c).
10	§ 4b.133	Minimum control speed	Max. T. O. or less if necessary	Most aft	Opt. below T. O. power crit.	T. O.	Retr.	T. O.	T. O.	T. O.	Windmilling or any other logical position	Closed	T. O.	Minimum control speed should be determined when engine is suddenly made inoperative.	Same as item 9 (a). Bank indicator if bank is to be demonstrated.
11	§ 4b.130 § 4b.170 § 4b.171 § 4b.172 § 4b.173 § 4b.180 § 4b.181 § 4b.182	Controllability, maneuverability* and stability	App.	Opt. and noted	SEE APPROPRIATE REGULATIONS									Airplane should be demonstrated for: (1) Controllability (2) Attitude during ground roll (3) nose over tendency during takeoff, landing and ground operation (4) Directional stability and control during *power-off landings in* cross winds and taxying (5) Water handling characteristics.	
12 (a) (b)	§ 4b.115 § 4b.123 (c)	Control Reverse thrust operation of props.													
13	§ 4b.141	Lateral and directional trim [1]	Max. T. O. and land.	Most fwd and most aft.	Opt.	Retr. and ext.	Retr. and ext.	Opt.	Power for level flight	Opt.	----------	----------	----------	Hands-off lateral and directional trim should be demonstrated from 1.4 Vs_1 to V_{NO} or M_{NO} whichever is the lesser.	
14 (a)	§ 4b.142 (a)	Long. trim in climb	Max. T. O.	Most fwd.	Opt.	Retr. and T. O.	Retr.	Max. cont.	Max. cont.	Opt.	----------	----------	----------	Hands-off long. trim should be demonstrated at a speed not in excess of 1.4 V_{s_1}.	
(b)	§ 4b.142 (b)	Long. trim in glide	Max. Land.	Most fwd.	Opt.	Retr. and ext.	Ext.	Wind milling	Off	Opt.	----------	----------	----------	Hands-off long. trim should be demonstrated at a speed not in excess of 1.4 V_{s_1}.	

For footnotes, see p. 220.

(c)	§ 4b.142 (c)	Long. trim in level	Max. T. O. and land.	Most fwd and most aft.	Opt.	Retr. and ext.	Retr. and ext.	Opt.	Power for level flight	Opt.				Hands-off long. trim should be demonstrated from 1.4 V_{s_1} to V_{NO} or M_{NO} whichever is lesser with landing gear and flaps retracted and from 1.4 V_{s_1} to V_{LE} with gear extended.	
15	§ 4b.143	Long., directional and lateral trim	Max. T. O.	Most fwd	Opt.	Retr.	Retr.	Max. cont.	Max. cont.	Opt.	Feath.	Closed	Opt.	Hands-off long., directional and lateral trim should be demonstrated during climb at a speed of 1.4 V_{s_1}.	
16	§4b.144	Trim 2 engs. inop.	See note[3]	Most fwd.	Opt.	Opt.	Retr.	Max. cont.	Max. cont.	Opt.	Feath.	Closed	Opt.	Hands-off long., lateral and directional trim should be demonstrated in rectilinear flight at airspeed used in § 4b.121.	
17	§4b. 152	Static long. stability landing power-off	Max. land.	Most fwd and most aft	Opt.	Ext.	Ext.	Windmilling	Power-off	Opt.				Static long. stability should be demonstrated from 1.1 V_{s_1} to 1.8 V_{s_1} or to placard speed with airplane trimmed at 1.4 V_{s_1}.	Elevator control force indicator.
18	§ 4b.153	Static long. stability approach	Max. land.	Max. aft	Opt.	Appr.	Retr.	Power for level flight at 1.4 V_{s_1}		Appr.				Same as test 17	Same as item 17.
19	§ 4b.154	Static long. stability climb	Max. T. O.	Most aft	Opt.	Retr.	Retr.	75% max. cont. for reciprocating engines. For turbine engines, see § 4b.154–1(a).		Opt.				Static long. stability should be demonstrated from 85% to 115% of V_{trim} when airplane is trimmed at best R/C speed except that trim speed need not be less than 1.4 V_{s_1}.	Same as item 17.
20 (a)	§ 4b.155 (a)	Static long. stability cruise	Max. T. O.	Most aft	Opt.	Retr.	Retr.	75% max. cont. See § 4b.155–1(a) (1).		Opt.				Static long. stability should be demonstrated from 1.3 V_{s_1} to 1.8 V_{s_1} or to V_{NE} whichever is less, with airplane trimmed at speed for level flight with power specified in § 4b.155–1 (a)(1).	Same as item 17.
(b)	§ 4b.155 (b)	Static long. stability cruise	Max. T. O.	Most aft	Opt.	Retr.	Ext.	75% max. cont. See § 4b.155–1(b) (1).		Opt.				Same as test 20 (a) but speed should not be in excess of level flight trim or gear down placard speed.	
21	§ 4b.156	Dynamic long. stability	OPTIONAL											Damping of any short period oscillations between stalling speed and max. permissible speed should be demonstrated with controls free and in a fixed position.	
22 (a)	§ 4b.157 (a)	Static directional stability	Max. T. O. Max. land	Most aft	Opt.	Retr. Ext.	Retr. Ext.	See § 4b.157		Opt.				Recovery from skid with rudder free should be demonstrated.	
(b)	§ 4b.157 (b)	Static lateral stability	Max. T. O.	Most aft	Opt.	Retr.	Retr. Ext.			Opt.				Tendency of wing to raise in recovery from turn should be demonstrated.	Rudder force indicator.
(c)	§ 4b.157 (c)	Static directional and lateral stability	Max. T. O. Max. land	Most aft	Opt.	Retr. Ext.	Retr. Ext.			Opt.				Proportionality of aileron and rudder deflections and forces during sideslip should be demonstrated.	
23	§4b.158	Dynamic directional and lateral stability	Max. T. O. and land	Most aft	Opt.	Retr. and ext.	Retr. and ext.	Opt.	Opt.	Opt.				Damping of any short period oscillations should be demonstrated with controls free and fixed at all speeds.	

Flying Qualities—Continued

Item	CAR ref. No.	Test description	Wt.	C. G.	Altitude	Flap	Landing gear	Engines						Test	Special instrumentation
								Operating			Inoperative				
								Prop.	Power	Cowl flap	Prop.	Throtl.	Cowl flap		
24 (a)	§4b.160	Stalls symmetrical power straight flight	Land Land Land Land Land Land Land T. O. T. O. T. O. T. O.	Fwd Fwd Aft Aft Aft Aft Aft Aft Aft Aft Aft	Opt.	Appr. Land Appr. Land Appr. Appr. Land Land Retr. T. O. Retr. T. O.	Ext. Ext. Ext. Ext. Retr. Ext. Retr. Ext. Ext. Ext. Ext. Ext.	Opt.	On On Off Off On On On On Off Off On On	Opt.	----	----	----	See §4b.160 (c) (1)	Means for continuous recording of angle-of-attack indicator, accelerometer; swivel static and shielded total pressure heads; altimeter; pitch and bank angle indicator; accelerometer; elevator position and force indicator; aileron and rudder position indicator.
(b)		Stalls symmetrical power turns	T. O. T. O. Land Land	Aft Aft Aft Aft	Opt.	Retr. Retr. Land Land	Retr. Retr. Ext. Ext.	Opt.	Off On Off On	Opt.	----	----	----	Prompt recovery and regain of control with normal piloting skill should be demonstrated in left and right turns up to 30 degrees of bank.	
25	§4b.161	Stalls asymetrical power	Max. T. O.	Aft	Opt.	Retr.	Retr.	75% maximum continuous power		Opt.	Opt.	Closed	Opt.	Safe recovery from stall without excessive loss of altitude should be demonstrated. Operating engines may be throttled back during recovery.	Rudder control force indicator if force is critical.
26	§4b.173	Controllability T. O. and land. in cross wind	Max. T. O. Max. land	Most aft	Opt.	T. O. Ext.	Ext.	Takeoff and power off		Opt.	----	----	----	Takeoffs and landings in cross winds should be demonstrated.	Wind velocity and direction indicator.
27	§4b.190	Flutter and vibration	Max. T. O. Max. land	Most aft		Retr. Ext.	Retr. Ext.	Cruise power		Opt.	----	----	----	The airplane should be tested from V_{S_1} to V_D or to placard speed, gear up and down, flaps up, T. O. approach and landing.	
28	§4b.324	Wing flap interconnection	REQUIREMENTS SHOULD BE SET UP FOR INDIVIDUAL CASES												

[1] Additional lateral and directional trim should be demonstrated in other configurations in conjunction with tests in § 4b.150.
[2] Weight at which climb is equal to at least 0.01 $V_{s_0}^2$ at 5,000 feet altitude.

Powerplant Tests

Item	CAR ref. No.	Test description	Wt.	C. G.	Altitude	Flap	Landing gear	Engines						Test	Special instrumentation
								Operating			Inoperative				
								Prop.	Power	Cowl flap	Prop.	Throtl.	Cowl flap		
29 (a)	§ 4b.400	Powerplant operation	----	----	----	Opt.	Opt.	----	----	----	----	----	----	Powerplant and propeller operation should be observed for satisfactory operation during the flight test program.	
(b)	§ 4b.400	Propeller operation	----	----	----	Opt.	Opt.								
30 (a)	§ 4b.416 (b) (1)	Unusable fuel level flight	Opt.	Opt.	Opt.	Retr.	Retr.	See test		Opt.	----	----	----	Unusable fuel should be determined in level flight at power required for V_0 or at max. cont. power whichever is less. Fuel tank should be turned off when fuel pressure decreases, or the engine malfunctions.	
(b)	§ 4b.416 (b) (2)	Unusable fuel climb	Not more than max. land.	Opt.	Opt.	T. O.	Retr.	T. O.	T. O.	Opt.	----	----	----	Unusable fuel should be determined during climb at V_2 speed. Fuel tank should be turned off when fuel pressure decreases or engine malfunctions.	
(c)	§ 4b.416 (b) (3)	Unusable fuel glide to climb	Land.	Opt.	Opt.	Ext.	Ext.	See test		Opt.	----	----	----	Unusable fuel should be determined during rapid application of max. cont. power and subsequent transition to climb at speed V_2 with retraction of flaps from a power off glide at 1.3 V_{s_0} flaps and gear ext. Fuel tank should be turned off when fuel pressure decreases or the engine malfunctions.	
(d)	§ 4b.416 (c)	Fuel Pressure	----	----	----	Opt.	Opt.	----	----	----	----	----	----	Ability to regain full fuel pressure on an engine should be demonstrated when engine runs out of fuel from any tank which engine can be fed and when engine is then switched to any full tank.	
(e)	§ 4b.416 (d)	Unusable fuel in tanks not used in T. O. and landing	----	----	----	----	----	----	----	----	----	----	----	Fuel runout tests on ground or in flight should be conducted as required in § 4b.416 (b) (1).	
31	§ 4b.417	Fuel system hot weather operation	See test	Opt.	See test	Retr.	Retr.	Max. T. O. and max. cont.		----	----	----	----	Vapor lock or occurrence of any other malfunctioning should be determined when airplane is operated with fuel 110° F at climb speed which should not exceed that permitting compliance with climb requirement of § 4b.119 (a) to the max. operating alt. selected by applicant. Airplane wt. should correspond to operation with full fuel tanks, minimum crew, and ballast to keep airplane within c. g. limits. (This test may be conducted on ground.)	

Powerplant Tests—Continued

Item	CAR ref. No.	Test description	Wt.	C. G.	Altitude	Flap	Landing gear	Engines						Test	Special instrumentation
								Operating			Inoperative				
								Prop.	Power	Cowl flap	Prop.	Throtl.	Cowl flap		
32	§ 4b.430	Fuel pump	Opt.	Opt.	6000	Opt.	Opt.	Power to maintain level flight		Opt.	----------	----------	----------	Engine operation with fuel at 110° F. using engine-driven fuel pumps alone. This may be a ground test.	
33	§ 4b.452 § 4b.440 (e) § 4b.465	Cooling Climb	Max. T. O.	Opt.	See Test	Opt.	Opt.	Max. Cont.	Max. Cont.	FAA hot day cooling position	Feath.	Closed	Opt.	After temperatures are stabilized in level flight, cooling climb should be started at or below the lower of the two altitudes specified in requirement and continued until 5 minutes after peak climb temperatures have been noted or to max. operating alt.	Calibrated temperature indicators for critical head and base, oil inlet, coolant outlet, etc.
34	§ 4b.453 § 4b.440 (e) § 4b.465	Cooling Takeoff	Max. T. O.	Opt.	Lowest practicable	Opt.	Opt.	T. O.	T. O.	FAA hot day cooling	Feath.	Closed	Opt.	After temperatures are stabilized in level flight at 75% max. cont. power (all engines operating) using normal cowl flaps and shutter settings, one engine should be feathered and climb started at lowest practicable altitude and continued for the same time interval as takeoff power is used during the determination of the takeoff flight path, the power then being reduced to max. cont. and the climb continued until at least 5 minutes after occurrence of the peak temperature.	Same as item 33.
35	§ 4b.454	Cooling Seaplane operation	Max. T. O.	Opt.	----------	Opt.	-------	Opt.	Sufficient for test air speed	Opt.	----------	----------	----------	Seaplane should be taxied for 10 mins. at 5 m. p. h. above the step speed after temperatures are stabilized.	Same as item 33.
36	§ 4b.461	Carburetor air heat rise	Opt.	Opt.	Opt.	Opt.	Opt.	60% max. cont. power		Opt.	----------	----------	----------	Airplane should be stabilized in flight with full cold carburetor. Carburetor preheat should be applied slowly and maintained until carburetor air temperature has stabilized. Tests should be conducted at two different ambient air temperatures unless one test is conducted at temperature of 30° F.	

Functional and Miscellaneous Tests

Item	CAR ref. No.	Test description	Wt.	C. G.	Altitude	Flap	Landing gear	Engines						Test	Special instrumentation
								Operating			Inoperative				
								Prop.	Power	Cowl flap	Prop.	Throtl	Cowl flap		
37 (a)	§ 4b.334 § 4b.116 (b)	Land. gear retracting mechanism operation and time to retract.	Opt.	Opt.	----------	----------	----------	----------	----------	----------	----------	----------	----------	Landing gear retraction and extension at 1.6 V_{s1} and time to retract at V_1 speed should be demonstrated. Structure should be substantiated at 0.67 Vc.	
(b)	§ 4b.334 (c)	Emergency land. gear mechanism operation.	----------	----------	----------	----------	----------	----------	----------	----------	----------	----------	----------	Satisfactory gear extension by use of emergency system should be demonstrated.	
38	§ 4b.337	Brakes	Max. land.	Most fwd.	----------	----------	----------	----------	----------	----------	----------	----------	----------	Braking deceleration should be demonstrated to be at least 50% of that obtained in § 4b.122 with loss of any single source of brake operating energy supply.	
39	§ 4b.116 (c) § 4b.401 (c)	Propeller time to feather	----------	----------	----------	----------	----------	----------	----------	----------	----------	----------	----------	The time required for the propeller to change from windmilling position to feather position should be determined at V_2 speed. Feathering at max. operating altitude should also be demonstrated.	
40 (a)	§ 4b.437 (a) (1)	Fuel jettisoning power-off glide.	Max. T. O.	Opt.	Opt.	Retr. or desired approved position.	Retr. or ext.	Windmilling.	Off	Opt.	----------	----------	----------	The time required to jettison fuel from tanks and the path of jettisoned fuel as to whether it impinges on any part of the airplane during or after jettisoning should be determined.	
(b)	§ 4b.437 (a) (2)	Fuel jettisoning climb.	Max. T. O.	Opt.	Opt.	Retr. or desired approved position.	Retr. or ext.	Max. cont.	Max. cont.	Opt.	Feath.	Closed	Closed	Same as test 40 (a) during climb with critical eng. inoperative.	
(c)	§ 4b.437 (a) (3)	Fuel jettisoning level flight	Max. T. O.	Opt.	Opt.	Retr. or desired approved position	Retr. or ext.	----------	Opt.	----------	----------	----------	----------	Same as test 40 (a) during level flight.	
41 (a)	§ 4b.467	Exhaust system carbon monoxide	Opt.	Opt.	----------	----------	----------	----------	----------	----------	----------	----------	----------	Carbon monoxide concentration should be determined in personnel compartments during T. O., climb, level flight, approach or landing flight and during heater and cabin supercharger operation.	Carbon monoxide detection indicator.

Functional and Miscellaneous Tests—Continued

Item	CAR ref. No.	Test description	Wt.	C. G.	Altitude	Flap	Landing gear	Engines						Test	Special instrumentation
								Operating			Inoperative				
								Prop.	Power	Cowl flap	Prop.	Throtl.	Cowl flap		
41 (b)	§ 4b.467 (a) (5)	Visibility	Opt.	Opt.										The effect of any exhaust gas discharge on pilot visibility at night should be determined.	
42	§ 4b.612 (b)	Altimeter calibration	Between max. land and max. T. O.	Opt.	Opt.	Retr.	Retr. Ext.	Opt.	Opt.	Opt.				If altimeter and airspeed use the same static vent, theoretical calibration from airspeed calibration should be determined and checked by flights at a precise elevation at various speeds.	Instrumentation for accurately determining airplane elevation.
43	§ 4b.640	Pneumatic boots	Opt.	Opt.										Operation of pneumatic boots should be checked in flight from just above stall the buffeting speed to 1.6 V_{s_1} and at power off stall.	
44	§ 4b.642	Flare operation	Opt.	Opt.										Flight demonstration should be conducted to determine that flare ejection can be accomplished without danger to the airplane or its occupants.	

45 (a) § 4b.337 (b) Brake control forces and operation
(b) § 4b.337 (c) Parking brake
(c) § 4b.350 (g) Noise level
(d) § 4b.351 (a) Pilot compartment vision
(e) § 4b.351 (b) Windshield wiper and de-icer operation
(f) § 4b.353 Cockpit controls
(g) § 4b.376 Cabin pressurization
(h) § 4b.384 Cargo and baggage compartment fire precaution
(i) § 4b.404 Propeller pitch and speed limitation
(j) § 4b.406 Propeller de-icing fluid
(k) § 4b.418 Fuel overflow—interconnected tanks
(l) § 4b.426 Fuel overflow and syphoning—fuel tank vents
(m) § 4b.449 Propeller feathering—trapped oil supply
(n) § 4b.611 Visibility of instrument installation
(o) § 4b.630 Instrument lights
(p) § 4b.631 Landing lights

Appendix C

Suggested Flight Programs for Approval of Changes in Airplane Configuration

The following assumes that an airplane has been type certificated in the transport category, and that a change is made affecting the operating characteristics of the airplane. Suggested general flight programs are given for common type of changes. This is to be used as a guide only since individual cases may require additional or fewer tests than those listed.

1. Tests Affected by *Change in Propeller*

Items	*Test Description*
5	Accelerate to V_1 cut one engine and continue acceleration to V_2
6(b)	Climb—second T. O. segment
6(e)	Climb—en route—all engines
6(g)	Climb—en route—two engines inoperative
6(h)	Climb—approach
6(i)	Climb—landing
10	Minimum control speed
29(b)	Propeller operation
33, 34 and 35	Cooling tests
36	Time to feather propeller
45(i)	Propeller pitch and speed limitations

2. Tests Affected by *Change in Power Rating*

Items	*Test Description*
2 (a)	Critical altitude—takeoff power
2 (b)	Critical altitude—max. cont. power
5	Accelerate to V_1 cut one engine and continue acceleration to V_2
6 (b)	Climb—2d T. O. segment
6 (e)	Climb—en route—all engines
6 (g)	Climbs—two engines inoperative
6 (h)	Climb—approach
6 (i)	Climb—landing
8 (f)	Control—sudden changes in power
9 (c)	Control 20° banked turns
10	Minimum control speed
15	Trim 2 engines inoperative
30	Cooling climb—max. cont.
31	Cooling—takeoff

3. Tests Affected by *Addition of a Major Drag Item* (Such as External Tank)

Items	*Test Description*
3	Stalling speeds
5	Accelerate to V_1 cut engine and continue acceleration to V_2
6 (a)	Climb—takeoff first segment
6 (e)	Climb—en route—all engines
6 (g)	Climb—en route—2 engines inoperative
6 (h)	Climb—approach
6 (i)	Climb—landing
8 (h)	Control—variation in airspeed
27	Flutter and vibration

4. Tests Affected by *Change in Engines*

Items	*Test Description*
2 (a)	Critical altitude—T. O. power
2 (b)	Critical altitude—max. cont. power
5	Accelerate to V_1, cut one engine and continue acceleration to V_2
6 (b)	Climb, 2d T. O. segment
6 (e)	Climb—en route—all engines
6 (g)	Climb—two engines inoperative
6 (h)	Climb—approach
6 (i)	Climb—landing
8 (f)	Control—sudden changes in power
9 (c)	Control 20° banked turns
10	Minimum control speed
16	Trim 2 engines inoperative
33	Cooling climb—max. cont. power
34	Cooling—takeoff power
36	Carburetor air heat rise

Appendix D

A General Order of Testing

Order	*Test Description*	*Item*
1.	Airspeed and altimeter calibrations	1, 42
2.	Stall speeds	3
	Engine calibration	2
3.	Minimum control speed	10
4.	Engine cooling	33, 34, 35
5.	Ground speed calibration, accelerate and stop, accelerate, landing tests, and reverse thrust propeller control	1, 4, 5, 7, 12
6.	Climb tests	6 (a) through 6 (i)
7.	Fuel system operation and carburetor air heat rise	30 (a) through 30 (e), 31, 32, 36
8.	Control tests	8 (a) through 8 (i), 9 (a) through 9 (d), 11, 26
9.	Stall characteristics	24 (a), 24 (b), 25
10.	Trim characteristics and static longitudinal, directional and lateral stability	13, 14 (a) through 14 (c), 15, 16, 17, 18, 19, 20 (a), 20 (b), 21, 22 (a) through 22 (c), 23, 28
11.	Flutter and vibration	27
12.	Fuel jettisoning	40 (a) through 40 (c)
13.	Exhaust system, flare operation, pneumatic boots, landing gear, brakes, propeller feathering, and miscellaneous functional	41 (a), 41 (b), 44, 43, 37 (a), 37 (b), 38, 39, 45

Appendix E

Transport Category (Part 4b) Flight Tests Grouped According to Weight and C. G. Conditions

DEFINITIONS

1. Takeoff weight—The maximum takeoff weight at sea level.
2. Landing weight—The maximum landing weight at sea level.
3. Low weight—A specific weight either lower than maximum takeoff or maximum landing.
4. Optional weight—Any weight that the manufacturer elects to use.
5. Appropriate weight—Appropriate to the airplane configuration; i. e., takeoff or landing.
6. Forward c. g.—The maximum forward center of gravity for which approval is desired. If the manufacturer desires to obtain approval for center of gravity limits varying with weight, he may (1) make the test at the nominal weight at the most forward c. g. regardless of weight, or (2) make the critical tests at both the nominal weight and its forward center of gravity limit and at the weight which gives the most forward center of gravity.
7. Aft c. g.—The maximum aft center of gravity for which approval is desired. See 5.
8. Optional c. g.—Any center of gravity that the manufacturer elects to use.

WEIGHTS

The test numbers listed below correspond to the item numbers in Appendix B

1. Takeoff weight
   a. Forward c. g.—4, 5, 13, 14 (a), 14 (c), 15
   b. Aft c. g.—8 (a), 8 (b), 9 (c), 10, 13, 14 (c), 19, 20 (a), 20 (b), 22 (a) through 22 (c), 23, 24, 25, 26, 27
   c. Optional c. g.—6 (a) through 6 (f), 34, 35, 40 (a) through 40 (c)
2. Landing weight
   a. Forward c. g.—3, 7, 8 (c) through 8 (i), 9 (b), 9 (d), 13, 14 (b), 14 (c), 16, 17, 38
   b. Aft c. g.—8 (a), 8 (b), 9 (a), 13, 14 (c), 17, 18, 22 (a) through 22 (c), 23, 24, 26
   c. Optional c. g.—6 (h), 6 (i), 8 (c) through 8 (i), 30 (c)
3. Low weight
   a. Forward c. g.—4, 5, 7 [1]
   b. Aft c. g.—None
   c. Optional c. g.—6 (a) through 6 (f), 6 (g) (2 wgts.), 6 (h), 6 (i), 30 (b)
4. Optional weight
   a. Forward c. g.—None
   b. Aft c. g.—None
   c. Optional c. g.—1, 2 (a), 2 (b), 21, 27, 28, 29 (a), 29 (b), 30 (a), 30 (d), 30 (e), 32, 36, 37 (a), 37 (b), 39, 41 (a), 41 (b), 42, 43

[1] Most critical c. g. should be used if demonstrations are to be made using reverse thrust.

Appendix F

Instrumentation Summary

1. Performance Tests

Item	*Test Description*	*Special Instrumentation*
1	Airspeed calibration.	Reference airspeed system.
	Ground speed calibration.	May be conducted in conjunction with instrumentation for item 4.
2	Engine calibration.	Humidity indicator.
3	Stalling speeds.	Reference airspeed system, instrument photo-recorder.
4	Accel. to V_1 and stop.	Graphically recording vertical and horizontal distance-time instrumentation, wind velocity and direction meteorological instrumentation, humidity indicator.
5	Accel. to V_2.	Same as for item 4.
6 (a) thru 6 (i)	Climbs.	Humidity indicator.
7	Landings.	Same as for item 4.

2. Flying Qualities

Item	*Test Description*	*Special Instrumentation*
9 (a) and 9 (b)	Control—sudden changes in heading.	Rudder force indicator.
10	Minimum control speed.	Rudder force indicator.
17 thru 20 (b)	Static longitudinal stability.	Elevator stick force indicator.
22 (a), 22 (b), and 22 (c)	Directional and lateral stability.	Rudder control force indicator.
24	Stalls.	Angle-of-attack indicator, accelerometer; swivel static and shielded total pressure head; altimeter; pitch and bank angle indicator; elevator position and force indicator; aileron and rudder position indicator.
25	Stalls—one engine out.	Rudder control force indicator required only when rudder control forces are critical.
26	Control—takeoff and landing in crosswind.	Wind velocity and direction measurement instrumentation.

3. Power Plant Tests

Item	*Test Description*	*Special Instrumentation*
33, 34, and 35	Cooling tests.	Temperature indicators for critical head, base, oil inlet, coolant temperatures.
36	Carburetor air heat rise.	Temperature indicator for carburetor.

4. Functional and Miscellaneous Tests

Item	*Test Description*	*Special Instrumentation*
41 (a)	Exhaust system—carbon monoxide.	Carbon monoxide detection indicator.
42	Altimeter calibration.	Instrument for precisely determining airplane elevation.

Appendix G

Special Civil Air Regulations Which Affect Part 4b

SPECIAL CIVIL AIR REGULATION NO. SR–389B

Effective: January 30, 1959
Adopted: December 24, 1958

Emergency Exits for Airplanes Carrying Passengers for Hire

Special Civil Air Regulation No. SR–389A, effective September 13, 1957, superseded Special Civil Air Regulation No. SR–389. All of the provisions of SR–389 were retained in SR–389A. However, the latter special regulation as amended on October 17, 1957, contained an addition to the occupant/exit table which permitted the Viscount 700 series airplanes to carry 53 occupants when 7 exits were provided.

Special Civil Air Regulation No. SR–389, effective October 27, 1952, superseded Special Civil Air Regulation No. SR–387. Except for correcting some minor errors with respect to the number of exits authorized by the Civil Aeronautics Administration, there was no difference between the two special regulations.

Special Civil Air Regulation No. SR–387, effective October 27, 1952, was adopted in order to make applicable to the then operating transport airplanes more stringent rules regarding the number of occupants permitted per exit. SR–387 required, among other things, that all large airplanes (more than 12,500 pounds maximum certificated takeoff weight) comply with either section 4b.362 (a), (b), and (c) of Part 4b of the Civil Air Regulations as amended by Amendment 4b–4 effective December 20, 1951, or with the specific requirements set up in SR–387. Subsequently, the provisions of section 4b.362 (a), (b), and (c) of Part 4b were revised by Amendment 4b–5, effective April 9, 1957.

Special Civil Air Regulation No. SR–389A permits the airplanes listed in the occupant/exit table to carry additional occupants if additional exits are provided, except that in no case shall more than 8 additional occupants be carried for any one additional exit. The preamble to Civil Air Regulations Draft Release No. 58–11 stated that the intent of this provision was that no more than 8 additional occupants could be authorized if the most effective exit for emergency evacuation were provided, which, by reference to the rule proposed in the draft release, is seen to be one comparable to a Type I exit as prescribed in section 4b.362. As herein set forth, it is intended that as many as 8 additional occupants may be authorized with the addition of an exit of reasonably high effectiveness and that a lesser number of occupants would be authorized with the addition of a less effective exit. For the purpose of this regulation, it has been established that the addition of an exit, approximating a Type II or IV exit as prescribed in section 4b.362, would possibly permit the addition of 8 occupants. This relaxation over the rule proposed in Draft Release 58–11 was prompted by comments received to the draft release and the fact that a number of airplanes had already received approval to carry 8 additional occupants with the addition of an exit com-

parable to a Type IV based on the Administrator's interpretation of SR–389A. Justification for the relaxation is based upon the current requirements of section 4b.362(c) wherein it may be seen that for the addition of a Type IV exit on each side, an increase of 30 passengers is permitted. While such a ratio is not advocated for airplanes covered by this special regulation because of other factors considered in establishing these values for section 4b.362, permitting 8 occupants to be added for a Type IV exit represents a more reasonable and realistic view than that proposed in Draft Release 58–11. Therefore, it is expressly provided herein that since the effectiveness of the exit varies with the type, size, and location, 8 additional occupants shall be authorized only when an exit comparable to a Type II or a Type IV exit as prescribed in section 4b.362 is provided.

Special Civil Air Regulation No. SR–389A does not contain provisions regarding the required reduction in occupancy when the number of exits is reduced. In order to cover such cases, it is provided herein that upon removal of any exit the maximum number of occupants shall be reduced by at least 8.

The occupant/exit table has been modified by listing the "L–1049 Series" in lieu of the "L–1049," and the "CV–340 and CV–440" in lieu of the "CV–340."

Interested persons have been afforded an opportunity to participate in the making of this regulation (23 F.R. 3275), and due consideration has been given to all relevant matter presented.

In consideration of the foregoing, the Civil Aeronautics Board hereby makes and promulgates the following Special Civil Air Regulation, effective January 30, 1959.

1. Contrary provisions of the Civil Air Regulations notwithstanding, no large airplane (more than 12,500 pounds maximum certificated take-off weight) while carrying passengers for hire shall be operated with occupants in excess of the number permitted by applying the provisions of section 4b.362 (a), (b), and (c) of Part 4b of the Civil Air Regulations as amended by Amendment 4b–5, effective April 9, 1957, except that airplane types listed in the following table may be operated with the listed maximum number of occupants (including all crew members) and the listed corresponding number of exits (including emergency exits and doors) heretofore approved by the Administrator for emergency egress of passengers.

2. Additional occupants above the values listed in the table may be carried if additional exits are provided, except that in no case shall more than 8 additional occupants be carried for any one additional exit. For the addition of exits comparable to at least a Type II or Type IV exit as prescribed in section 4b.362, a maximum of 8 additional occupants may be authorized and for exits not comparable to at least a Type II or Type IV exit, the Administrator after consideration, among other factors, of the type, size, and location of the exit, may authorize a lesser number of additional occupants.

3. For airplanes which have a ratio (as computed from the table in this special regulation) of maximum number of occupants to number of exits greater than 14:1 and for airplanes which do not have installed at least one full-size door-type exit in the side of the fuselage in the

rearward portion of the cabin, the first additional exit approved by the Administrator for increased occupancy shall be a floor-level exit not less than 24 inches wide by 48 inches high located in the side of the fuselage in the rearward portion of the cabin. In no case shall an occupancy greater than 115 be allowed unless there is such an exit on each side of the fuselage.

4. The maximum number of occupants authorized (listed in the table) shall be reduced where the number of approved exits is less than that shown in the table. The reduction in the maximum number of occupants for each exit eliminated shall be determined by the Administrator taking due account of the effectiveness of the remaining exits for emergency evacuation, except that the maximum number of occupants shall be reduced by at least 8 for each eliminated exit. In no case, when exits are deleted, shall the resulting ratio of occupants to exits be greater than 14:1, and there shall be at least one exit on each side of the fuselage irrespective of the number of occupants.

Airplane type	Maximum number of occupants including all crew members	Corresponding number of exits authorized for passenger use
B–307	61	4
B–377	96	9
C–46	67	4
CV–240	53	6
CV–340 and CV–440	53	6
DC–3	35	4
DC–3 (Super)	39	5
DC–4	86	5
DC–6	87	7
DC–6B*	112	11
L–18	17	3
L–049, L–649, L–749	87	7
L–1049 series	96	9
M–202	53	6
M–404	53	7
Viscount 700 series	53	7

*The DC–6A, if converted to a passenger transport configuration, will be governed by the maximum number applicable to the DC–6B.

This regulation supersedes Special Civil Air Regulation No. SR–389A as amended by Amendment No. 1 and shall remain effective until superseded or rescinded by the Board or the Administrator of the Federal Aviation Agency, as appropriate.

AMENDMENT I TO SPECIAL CIVIL AIR REGULATION NO. SR–389B

Effective: September 11, 1959
Adopted: September 11, 1959

Emergency Exits for Airplanes Carrying Passengers for Hire

Special Civil Air Regulation No. SR–389B, adopted by the Civil Aeronautics Board on December 24, 1958, and effective January 30, 1959, specified in part that no large airplane while carrying passengers for hire shall be operated with occupants in excess of the number permitted by applying the provisions of section 4b.362 (a), (b), and (c) of Part 4b of the Civil Air Regulations as amended by Amendment 4b–5 effective April 9, 1957, except for those airplanes listed in the table in SR–389B. Special Civil Air Regulations SR–389A, which preceded SR–389B, contained a similar provision but referred to Amendment 4b–4 effective December 20, 1951. The effect of SR–389B was to apply the current Part 4b exit requirements referenced in SR–389A.

A review of the history of the development of SR–389B indicates that such retroactive application of current Part 4b requirements was included inadvertently and that it would impose an unnecessary burden on the operators of certain airplanes. SR–389B is therefore being amended to eliminate this retroactive provision.

Since this amendment imposes no additional burden on any person, notice and public procedure hereon are unnecessary, and the amendment is made effective immediately.

In consideration of the foregoing, Paragraph 1 of Special Civil Air Regulation No. SR–389B is hereby amended to read as follows, effective September 11, 1959.

1. Contrary provisions of the Civil Air Regulations notwithstanding, no large airplane (more than 12,500 pounds maximum certificated take-off weight) type certificated under Civil Air Regulations effective prior to April 9, 1957, while carrying passengers for hire, shall be operated with occupants in excess of the number permitted by applying the provisions of section 4b.362 (a), (b), and (c) of Part 4b of Civil Air Regulations as amended by Amendment 4b–4 effective December 20, 1951, except that airplane types listed in the following table may be operated with the listed maximum number of occupants (including all crew members) and the listed corresponding number of exits (including emergency exits and doors) heretofore approved by the Administrator for the emergency egress of passengers.

542115 O—60——17

SPECIAL CIVIL AIR REGULATION NO. SR–392B

Effective: February 25, 1957
Adopted: February 25, 1957

Facilitation of Experiments With Exterior Lighting Systems

Special Civil Air Regulation No. SR–392A adopted June 29, 1955, permits air carriers, subject to the approval of the Administrator, to install and use experimentally, on a limited number of their airplanes, exterior lighting systems which do not conform to the specifications contained in Part 4b of the Civil Air Regulations. The purpose of SR–392A was to permit experimentation on large airplanes while retaining their standard airworthiness certification. Prior to that time such experimentation was conducted either on Government-owned aircraft or on private aircraft limited in operations to the conditions of an experimental certificate.

SR–392A does not extend the permission for experimentation with exterior lights to non-air-carrier aircraft because at the time of its adoption only air carrier operators indicated interest in this activity. Recently, however, new experimental developments in anti-collision light systems have aroused the interest of private and corporate operators to the extent that some of the operators apparently wish to install the new systems on their aircraft for purposes of experimentation. The Board sees no valid reason why operators other than air carriers should not be permitted to participate, if they wish, in experiments intended to improve the effectiveness of aircraft exterior lighting, provided that the number of such aircraft is reasonably limited.

Since future experimentation is to be conducted more widely and by private individuals, the Board believes that conditions should be imposed which will assure that the experimental exterior lights are in fact installed for purposes of bona fide experimentation and that the results of such experimentation become available to the Government and to all other interested persons.

Interested persons have been afforded an opportunity to participate in the making of this regulation (21 F.R. 3388), and due consideration has been given to all relevant matter presented. Since this regulation imposes no additional burden on any person, it may be made effective on less than 30 days' notice.

In consideration of the foregoing, the Civil Aeronautics Board hereby makes and promulgates the following Special Civil Air Regulation, effective February 25, 1957.

Contrary provisions of the Civil Air Regulations notwithstanding, experimental exterior lighting equipment which does not comply with the relevant specifications contained in the Civil Air Regulations may, subject to the approval of the Administrator, be installed and used on air-

craft for the purpose of experimentation intended to improve exterior lighting for a period not to exceed six months: *Provided,* That

(1) The Administrator may grant approval for additional periods if he finds that the experiments can be reasonably expected to contribute to improvements in exterior lighting;

(2) Not more than 15 aircraft possessing a U.S. certificate of airworthiness may have installed at any one time experimental exterior lighting equipment of one basic type;

(3) The Administrator shall prescribe such conditions and limitations as may be necessary to insure safety and avoid confusion in air navigation;

(4) The person engaged in the operation of the aircraft shall disclose publicly the deviations of the exterior lighting from the relevant specifications contained in the Civil Air Regulations at times and in a manner prescribed by the Administrator; and

(5) Upon application for approval to conduct experimentation with exterior lighting, the applicant shall advise the Administrator of the specific purpose of the experiments to be conducted; and at the conclusion of the approved period of experimentation, he shall advise the Administrator of the detailed results thereof.

This regulation supersedes Special Civil Air Regulation No. SR–392A and shall terminate February 25, 1962, unless sooner superseded or rescinded.

SPECIAL CIVIL AIR REGULATION NO. SR–403A

Adopted: Aug. 4, 1960
Effective: Aug. 9, 1960

Certification and Operation of Certain Airplanes for the Department of the Interior in the Trust Territory of the Pacific Islands

Special Civil Air Regulation No. SR–403 waived certain provisions of Part 4b of the Civil Air Regulations to permit the certification thereunder of three Grumman SA–16A airplanes owned or controlled by the Department of the Interior. These airplanes were certificated for operation by Transocean Air Lines, under contract with the Department of the Interior, to provide transportation within the Trust Territory of the Pacific Islands and between those islands and the island of Guam. The airworthiness certificate for each airplane certificated under SR–403 was required to bear the following legend: "This certificate is issued pursuant to Special Civil Air Regulation SR–403 and is valid only for operation by Transocean Air Lines under contract with the Department of the Interior within the Trust Territory of the Pacific Islands and between these islands and the island of Guam."

By letter dated July 1, 1960, the Department of the Interior informed the Administrator that the contract with Transocean Air Lines expired June 30, 1960. The Department has requested that SR–403 be revised to permit the issuance of airworthiness certificates which will be valid when the Grumman SA–16A airplanes are operated by either the Trust Territory Government or by a contractor selected by that Agency. With minor exceptions, other terms and conditions of SR–403 would remain unchanged.

The circumstances which led to the adoption of SR–403 continue to exist. The safety record in operations conducted under the provisions of this regulation has been satisfactory, and the Federal Aviation Agency can continue to monitor the safety practices of any contractor by means of the air carrier operating certificate or the commercial operator certificate such persons are required to hold.

Special Civil Air Regulations Nos. SR–364 and SR–364A, which permitted Transocean Air Lines to operate PBY aircraft in the Trust Territory, are obsolete and are being rescinded by this regulation.

Since this regulatory action involves minor changes, and imposes no additional burden on any person, notice and public procedure hereon are unnecessary, and it may be made effective on less than 30 days' notice.

In consideration of the foregoing, the following Special Civil Air Regulation is hereby adopted:

1. Contrary provisions of the Civil Air Regulations notwithstanding, Grumman SA–16A airplanes owned or controlled by the Department of the Interior will be certificated under the provisions of Part 4b of the Civil Air Regulations, effective December 31, 1953, except that compliance need not be shown with the following provisions of that part. Airplanes so certificated shall be restricted to operations conducted within the Trust Territory of the Pacific Islands and between these islands and the island of Guam by the

Trust Territory Government or by an air carrier or commercial operator under contract with the Trust Territory Government.

a. Sections 4b.120(a) and 4b.120(b) to the extent that the maximum certificated takeoff weight with respect to performance cannot be met at weights of 29,000 pounds or less.

b. Section 4b.120(c).

c. Sections 4b.115, 4b.116, 4b.117, 4b.122, 4b.123, 4b.124, 4b.324(a), 4b.337(a)(1), 4b.337(a)(2), 4b.441(b)(1), 4b.474(c), 4b.484(a)(2), 4b.485(c), 4b.604(d), 4b.604(f), 4b.604(h), and 4b.622(c) to the extent that the airplane cannot comply with the provisions of these sections: ***Provided,*** That the Military Flight Manual, placards, or similar means shall be provided which shall contain the appropriate procedures and warnings necessary to overcome or explain the deficiencies resulting from noncompliance with these sections.

d. Sections 4b.226(b), 4b.352(b), 4b.356(b), 4b.383(b)(2), 4b.612(d), 4b.612(f), 4b.624(b) to the extent that the airplane cannot comply with the provisions of these sections.

e. Section 4b.443 to the extent that it requires the oil tank to be located outside a fire zone unless it is constructed of fire-proof materials.

f. Sections 4b.740 through 4b.743: ***Provided,*** That the Military Flight Manual shall be used as supplemented by such limitations and procedural data as found necessary by the Director, Bureau of Flight Standards, or his authorized representative, or as required by this regulation.

2. The airworthiness certificate for each airplane certificated hereunder shall bear the following legend: "This certificate is issued pursuant to Special Civil Air Regulation SR–403A and is valid only for operations conducted within the Trust Territory of the Pacific Islands and between these islands and the island of Guam by the Trust Territory Government or by an air carrier or commercial operator under contract with the Trust Territory Government."

3. The operations referred to herein shall be conducted in accordance with Part 42 of the Civil Air Regulations with the exception of sections 42.21 (a)(15), section 42.30 to the extent necessary to permit the use of military overhauled parts and supplies, and of those provisions which are inconsistent with the requirements of Part 4b for which noncompliance is authorized herein: ***Provided,*** That appropriate Bureau of Flight Standards personnel shall establish operating limitations consistent with the standards established herein.

4. The air carrier operating certificate or commercial operator certificate of any contractor selected by the Trust Territory Government shall be amended to the extent necessary to permit the use of said Grumman SA–16A airplanes in operations conducted pursuant to the terms of the contract.

This Special Civil Air Regulation shall become effective on August 9, 1960, and supersedes Special Civil Air Regulations Nos. SR–364, SR–364A, and SR–403.

U. S. GOVERNMENT PRINTING OFFICE : 1961 O - 582636

SPECIAL CIVIL AIR REGULATION NO. SR–406C

Effective: July 1, 1956
Adopted: June 28, 1956

Application of Transport Category Requirements to C–46-Type Airplanes

On June 30, 1954, the Civil Aeronautics Board adopted Special Civil Air Regulation No. SR–406, effective July 1, 1954, which provided for the modification and operation of C–46 type airplanes in passenger service. On June 7, 1955, the Board adopted Special Civil Air Regulation No. SR–406A, effective June 7, 1955, which added certain substantive and clarifying amendments to SR–406. On March 30, 1956, the Board adopted Special Civil Air Regulation No. SR–406B, effective April 1, 1956, which extended the date for modification of C–46 airplanes in passenger service from April 1, 1956, to July 1, 1956. The preamble material of these three Special Civil Air Regulations is incorporated herein by reference.

SR–406B provided only temporary relief from those provisions of Special Civil Air Regulation No. SR–406A which prevented the use of C–46 airplanes in passenger operations under Part 42 of the Civil Air Regulations on and after April 1, 1956, unless recertificated in accordance with the regulation. In SR–406B, the Board indicated that subject to persuasive reasons for failing, type certification had to be accomplished before July 1, 1956, and that, within the effective period of the regulation, the Board would determine a later end effective date by which recertification of these airplanes in the transport category must be completed. It was expressly stated that the later end effective date for recertification would depend on a bona fide showing of meeting the type certification requirements.

Since the adoption of Special Civil Air Regulation No. SR–406B, two type certificates have been issued under its provisions and one application for a type certificate has been received although complete data have not been submitted to the Civil Aeronautics Administration as of the date of adoption of this regulation, SR–406C.

In adopting SR–406B, the Board anticipated obtaining a schedule of modification of C–46 airplanes from the applicants for type certification. In its attempt to obtain this information, not only has the Board not received such a schedule, but has been advised that only a comparatively few operators have actual contractual agreements with holders of type certificates to accomplish the required modification.

The Board has previously stated that a final compliance date for modification would depend on a bona fide showing that the aircraft certification requirements will be met in the reasonably near future. However, in the absence of such a showing by more than a few operators, the Board must establish an end compliance date without the benefit of any complete and detailed modification schedules. In the only formal request for an extension of the effective date of these regulations which the Board has received, it is indicated that required modifications are

expected to be completed by January 1, 1957. No other information available to the Board indicates that this is not a reasonable end effective date; therefore, January 1, 1957, is hereby established as the date when recertification is required.

Since October 1, 1955, the Administrator has been authorized to permit the continued operation of C–46 aircraft in passenger service on a showing by operators that "genuine and diligent efforts" have been made to accomplish the required modifications. In the light of the fact that there now exist at least two persons possessing type certificates on the basis of which such modifications may be made, there no longer appears to be any reason for not requiring the showing of a firm contract between the operator and the holder of such a type certificate indicating that the required modifications will be completed prior to January 1, 1957, prior to such operations. Accordingly, this Special Civil Air Regulation contains a requirement that before the Administrator is authorized to continue to permit operation of C–46 airplanes in passenger service, between July 1, 1956, and January 1, 1957, there must be a showing by the operator that he has a firm contract with the holder of a type certificate to complete modifications prior to January 1, 1957, except that the Administrator may authorize during the period July 1, 1956, through July 15, 1956, such operations without a showing of such firm contract where the Administrator has previously permitted such operations based on genuine and diligent efforts to complete the required modifications. In other words, the Administrator may authorize continued operations of C–46 airplanes in passenger service from July 1, 1956, to July 16, 1956, where he has previously given such authority. However, on and after July 16, 1956, the Administrator may authorize such continued operations only upon a showing by the operator that he has a firm contract with the holder of a type certificate to complete modifications prior to January 1, 1957.

As stated hereinbefore, all the preamble material pertinent to the application of transport category requirements to C–46 type airplanes appearing in SR–406, SR–406A, and SR–406B is incorporated herein by reference. However, in order to obviate any possible confusion as to which specific regulations are presently applicable to accomplish the recertification of the C–46 in passenger service, all such regulations are included in this Special Civil Air Regulation.

Since this regulation continues in effect the same rules as are presently applicable to C–46 type airplanes, with the exception of the compliance date listed herein, without diminution in safety standards, and since it would be in the public interest to prescribe rules to become effective on July 1, 1956, to permit the continuation of operation of C–46 type airplanes in passenger service, the Board finds that omission of notice and public procedure is not contrary to public interest and that good cause exists for making this regulation effective on less than 30 days' notice.

In consideration of the foregoing, the Civil Aeronautics Board hereby makes and promulgates the following Special Civil Air Regulation, effective July 1, 1956:

1. Contrary provisions of the Civil Air Regulations notwithstanding (in particular the provisions of section 42.15(b) of Part 42), C–46 airplanes may be used in passenger operations conducted under Part 42 of the Civil Air Regulations. Such airplanes shall be operated in accord-

ance with section 42.15(a) of Part 42 and the provisions of this special regulation.

2. C–46 type airplanes, when used in passenger operations in accordance with paragraph 4 of this regulation, shall not be operated at weights exceeding those which are demonstrated to the Administrator will allow compliance with the performance requirements of Part 4b, except that in determining the maximum take-off weight, such weight shall be limited only to a value at which the airplane has a rate of climb equal to 0.035 V_{s1}^2 in the take-off configuration at sea level with the landing gear retracted but with the propeller of the inoperative engine feathered rather than windmilling.

3. Provisionally, pending a determination by the Administrator of the weights at which C–46 airplanes will meet the standards prescribed by paragraph 2 of this regulation, the maximum take-off weight of such airplanes, when used in the manner herein referred to, shall not exceed 44,300 pounds: *Provided*, That in the case of C–46 airplanes equipped with Hamilton Standard propellers with blades Model Number 6419A–9 or approved equivalent which have been clipped in accordance with specifications approved by the Administrator, such provisional maximum weight shall be increased by 1,000 pounds until such time as the Administrator shall have determined by suitable tests another value to correspond to the additional efficiency obtainable by the use of such propellers, and thereafter by such other value.

4. The Administrator of Civil Aeronautics may authorize continued operation of C–46 airplanes in passenger service in accordance with paragraphs 2 and 3 of this regulation until January 1, 1957, if he finds that the applicant for such authorization has a bona fide, firm contract with the holder of a type certificate indicating that the required modifications will be completed prior to January 1, 1957, except that the Administrator may authorize during the period July 1, 1956, through July 15, 1956, such continued operation without a showing of such firm contract where the Administrator has previously permitted such operations based on genuine and diligent efforts to complete the required modifications. Such type certificate shall indicate that it meets the transport category requirements of Part 4b of the Civil Air Regulations in effect on July 20, 1950, with the exceptions authorized in SR–406A.

5. On and after July 1, 1956, (except as provided in paragraph 4) C–46 airplanes in passenger service shall comply with the provisions of Part 4b as in effect on July 20, 1950, except as otherwise provided hereinafter:

a. The provisions of sections 4b.0 through 4b.19 of Part 4b, effective May 18, 1954, shall be complied with.

b. The provisions of sections 4b.100 through 4b.190 need not be complied with.

c. The birdproof windshield requirements of section 4b.352 need not be complied with.

d. The provision of sections 4b.480 through 4b.490 effective May 16, 1953, shall be complied with in lieu of sections 4b.480 through 4b.489 effective July 20, 1950, with the exception of subparagraph 4b.484(a)(1) which shall be applicable as effective July 20, 1950, and paragraph 4b.487(e) which has no counterpart in the 1950 regulations.

6. On and after January 1, 1957, C–46 airplanes in passenger service shall be recertificated in the transport category in accordance with paragraph 5 of this regulation, and shall comply with the provisions of sections 4b.100 through 4b.190 with the following exception: In determining the take-off path in accordance with section 4b.116 and the one-engine-inoperative climb in accordance with section 4b.120 (a) and (b), the propeller of the inoperative engine may be assumed to be feathered if there is installed either an approved means for automatically indicating when the particular engine has failed or an approved means for automatically feathering the propeller of the inoperative engine.

7. In applying the provisions of paragraphs 5 and 6 of this regulation, where literal compliance with the requirements of sections 4b.130 through 4b.190 of Subpart B and Subparts C, D, E, and F of Part 4b is extremely difficult to accomplish, and where the Administrator finds that service experience with the C–46 type airplane so justifies, the Administrator may authorize deviations from specific details of these requirements, taking into account the effect of design changes.

8. On or after January 1, 1957, C–46 airplanes in passenger service shall be operated in accordance with the performance operating limitations applicable to transport category airplanes.

9. C–46 airplanes which comply with the provisions of paragraphs 5 and 6 of this regulation may be used in passenger operations conducted under the provisions of Parts 40 and 41 provided they are operated in accordance with paragraph 8.

10. This Special Civil Air Regulation supersedes Special Civil Air Regulation SR–406B.

SPECIAL CIVIL AIR REGULATION NO. SR-407

Effective: September 10, 1954
Adopted: August 6, 1954

Basis for Approval of Modification of Airplane Types Douglas DC-3 and Lockheed L-18

On October 7, 1953, the Civil Aeronautics Board adopted Special Civil Air Regulation SR-398, effective November 11, 1953, (18 F.R. 6448) which provided a basis for approval of modifications of DC-3 and L-18 airplanes, but limited the scope of that regulation to increases in engine takeoff power limit ation up to 1,350 horsepower per engine, to installation of engines of not more than 1,830 cubic inches displacement, and to the establishment of new maximum certificated weights not in excess of 26,900 pounds for the DC-3 and 19,500 pounds for the L-18. This regulation expands the scope of SR-398 to cover approval of additional modifications and maximum certificated weights for DC-3 and L-18 airplanes. In order to have all the regulations applicable to modifications and weight increases of the DC-3 and L-18 appear in one document, this regulation embodies herein the provisions of SR-398 and the additional regulations which are made applicable to these airplanes. SR-398 is thus superseded by this regulation.

The Douglas DC-3 and the Lockheed L-18 airplane types were originally designed and certificated on the basis of airworthiness standards in effect prior to 1940. These were contained in Bulletin 7-A promulgated by the former Bureau of Air Commerce and in the initial Part 04 of the Civil Air Regulations which was basically a recodification of Bulletin 7-A. Subsequently the Civil Aeronautics Board promulgated and kept up to date newer airworthiness requirements contained in Parts 3, 4a, and 4b of the Civil Air Regulations, the latter two parts containing rules for transport category airplanes. The DC-3 and L-18 are the only large airplane types now in general use in the United States which retain the old standards as a basis for their certification.

For a number of years after the initial certification of these two airplane types relatively few important design changes were introduced, and the airplane specifications regarding maximum certificated weights remained practically unchanged. More recently, however, several operators have made significant design changes in DC-3 and L-18 airplanes and it has become apparent that with the continued use of these airplanes, more operators are considering design changes, such as the installation of higher powered engines and increases in maximum certificated weights. Although the basis for certification of these airplanes remains unchanged, the Administrator of Civil Aeronautics in some instances has made changes to the pertinent aircraft specifications by applying certain provisions of Part 4a of the Civil Air Regulations. The Board does not consider Bulletin 7-A and the early versions of Part 04 adequate regulatory bases upon which further modifications to these airplane types can be approved by the Administrator.

The provisions of this Special Civil Air Regulation provide the basis for approval by the Administrator of future modifications of individual DC-3 and L-18 airplanes. The provisions in section 1 of SR-398 permit-

ting the Administrator to waive the requirements of the regulation when it was shown that a particular airplane was in the process of modification at the time that regulation became effective, has been omitted from this regulation because SR–398 has been in effect for sufficient time to eliminate the need for waiver authority by the Administrator.

This regulation continues the general provisions of SR–398 which required that modifications of DC–3 and L–18 airplanes be accomplished in accordance with the provisions of either Part 4a or Part 4b of the Civil Air Regulations applicable to the modification being made, and which were in effect on September 1, 1953, unless the applicant elects to make the modification in accordance with Part 4b as in effect on the date of modification. This regulation requires, also, that in electing to perform a modification under either Part 4a or Part 4b, each specific modification must be accomplished in accordance with all of the provisions of either Part 4a or Part 4b related to the particular modification. It does not permit selection of certain provisions of Part 4a and other provisions of Part 4b. For example, if it were desired to make a modification of the landing gear, it could be made under either Part 4a or Part 4b, but not partially under Part 4a and partially under Part 4b. This also applies when the applicant elects to make a modification in accordance with the provisions of Part 4b in effect on the date of modification in lieu of Part 4a or Part 4b as in effect on September 1, 1953.

In addition to the general provisions for modification, this regulation contains the specific requirements of SR–398 with respect to approval of increases in takeoff power limitation and the installation of new type engines in DC–3 and L–18 airplanes and provides some additional requirements. The intent of these specific requirements is to ensure that such changes will not result in a decrease in safety. This is in general consistent with the policy followed by the Administrator in approving changes made prior to the adoption of SR–398.

In the case of an increase in the takeoff power limitation beyond 1,200 horsepower per engine, but not to exceed 1,350 horsepower per engine, this regulation continues the provisions of SR–398 which required that the increase in power shall not adversely affect the flight characteristics of the airplane. The intent of this provision is to permit increases in takeoff power only if the applicant can show that the use of the increased power does not result in deterioration of the flight characteristics of the airplane when compared to its previous characteristics. It is believed, however, that increases in takeoff power limitation above 1,350 horsepower per engine may result in changes in the engine installation and the airplane's flight characteristics to such an extent that the basis for approval of increases in horsepower provided in SR–398 is no longer appropriate. Since Part 4b represents the most recent design practices, this regulation provides that the takeoff power limitation may be increased beyond 1,350 horsepower if compliance is shown with Part 4b at the increased power with respect to the engine installation provisions, the flight characteristics, and the ground handling requirements.

This regulation contains the provisions of SR–398 which established either Part 4a or Part 4b as the basis for approving the installation of engines not exceeding 1,830 cubic inches displacement which necessitate major modification or redesign, on the condition that there is no de-

crease in engine fire prevention and protection when compared to the prior engine installation. Since the use of engines with more than 1,830 cubic inches displacement will necessitate extensive modification of the entire engine installation, it appears necessary that such an installation be accomplished in accordance with the most recent airworthiness provisions of the regulations. This regulation, therefore, requires that the installation of these larger engines be accomplished in accordance with the requirements of Part 4b of the Civil Air Regulations.

This regulation also continues the provisions of SR–398 which permitted establishment of new maximum certificated weights not to exceed 26,900 pounds for the DC–3 and 19,500 pounds for the L–18. Where such new maximum weights are desired, the airworthiness certificates may be amended and the maximum weights established in accordance with the transport category performance requirements of either Part 4a or Part 4b, subject to the structural limitations of the airplane. With respect to maximum weights in excess of 26,900 pounds for the DC–3 and 19,500 pounds for the L–18, however, it is considered that such increases in weight may seriously affect not only the structural limitations, but also the flight and ground handling characteristics of the airplane. This regulation requires that weights in excess of 26,900 pounds for the DC–3 and 19,500 pounds for the L–18 shall be established in accordance with the performance, structural, flight characteristics, and ground handling requirements of Part 4b.

It should be noted that in certain cases, showing of compliance is required on the basis of Part 4b of the Civil Air Regulations. In some instances, literal compliance with the provisions of Part 4b may be extremely difficult to accomplish and would not contribute materially to the objective sought. In such cases this regulation provides that the Administrator may take into account the experience gained with the DC–3 and L–18 airplanes. Where such experience justifies it, he is authorized to accept in lieu of the literal provisions of Part 4b such measures of compliance as he finds will effectively accomplish the basic objectives.

SR–398 also required, as a basis for approval of new maximum certificated weights, that the applicant provide flight manual material containing information which will permit the application of the transport category performance operating limitations in the operation of the airplane. This Special Civil Air Regulation continues this requirement. In view of the fact that an applicant for new maximum certificated weights has such weights established in accordance with the transport category performance requirements of either Part 4a or Part 4b, this regulation also provides that an airplane having such newly established weights shall be considered a transport category airplane in applying the operating rules of the Civil Air Regulations. As a result, therefore, such airplanes when used in air carrier passenger service must be operated in accordance with the transport category performance operating limitations, but when used in other types of services the transport category performance operating limitations are not applicable as at present. Consideration is being given, however, to the problem of making them applicable to all types of operations conducted in transport category airplanes. If such rules are established, then all DC–3 and L–18 airplanes, having

certificated weights increased in accordance with SR–398 or this regulation, will have to comply with these rules also. In the meantime, it is recommended that operators, whose airplanes are approved for increased weights by reason of SR–398 or by this regulation, make use of this information to aid in assuring safety in their operations.

Interested persons have been afforded an opportunity to participate in the making of this regulation, and due consideration has been given to all relevant matter presented.

In consideration of the foregoing, the Civil Aeronautics Board hereby makes and promulgates the following Special Civil Air Regulation effective September 10, 1954:

1. *Applicability.* Contrary provisions of the Civil Air Regulations regarding certification notwithstanding,[1] this regulation shall provide the basis for approval by the Administrator of modifications of individual Douglas DC–3 and Lockheed L–18 airplanes subsequent to the effective date of this regulation.

2. *General Modifications.* Except as modified in sections 3 and 4 of this regulation, an applicant for approval of modifications to a DC–3 or L–18 airplane which result in changes in design or in changes to approved limitations shall show that the modifications were accomplished in accordance with the rules of either Part 4a or Part 4b in effect on September 1, 1953, which are applicable to the modification being made: *Provided,* That an applicant may elect to accomplish a modification in accordance with the rules of Part 4b in effect on the date of application for the modification in lieu of Part 4a or Part 4b as in effect on September 1, 1953: *And provided further,* That each specific modification must be accomplished in accordance with all of the provisions contained in the elected rules relating to the particular modification.

3. *Specific conditions for approval.* An applicant for any approval of the following specific changes shall comply with section 2 of this regulation as modified by the applicable provisions of this section:

(a) *Increase in takeoff power limitation—1,200 to 1,350 horsepower.* The engine take-off power limitation for the airplane may be increased to more than 1,200 horsepower but not to more than 1,350 horsepower per engine if the increase in power does not adversely affect the flight characteristics of the airplane.

(b) *Increase in takeoff power limitation to more than 1,350 horsepower.* The engine takeoff power limitation for the airplane may be increased to more than 1,350 horsepower per engine if compliance is shown with the flight characteristics and ground handling requirements of Part 4b.

(c) *Installation of engines of not more than 1,830 cubic inches displacement and not having a certificated take-off rating of more than 1,350 horsepower.* Engines of not more than 1,830 cubic inches displacement and not having a certificated takeoff rating of more than 1,350 horsepower which necessitate a major modification or redesign of the engine installation may be installed, if the engine fire prevention and fire protection are equivalent to that on the prior engine installation.

[1] It is not intended to waive compliance with such airworthiness requirements as are included in the operating parts of the Civil Air Regulations for specific types of operation.

(d) *Installation of engines of more than 1,830 cubic inches displacement or having certificated takeoff rating of more than 1,350 horsepower.* Engines of more than 1,830 cubic inches displacement or having certificated takeoff rating of more than 1,350 horsepower may be installed if compliance is shown with the engine installation requirements of Part 4b: *Provided,* That where literal compliance with the engine installation requirements of Part 4b is extremely difficult to accomplish and would not contribute materially to the objective sought, and the Administrator finds that the experience with the DC–3 or L–18 airplanes justifies it, he is authorized to accept such measures of compliance as he finds will effectively accomplish the basic objective.

4. *Establishment of new maximum certificated weights.* An applicant for approval of new maximum certificated weights shall apply for an amendment of the airworthiness certificate of the airplane and shall show that the weights sought have been established, and the appropriate manual material obtained, as provided in this section. (Note: Transport category performance requirements result in the establishment of maximum certificated weights for various altitudes.)

(a) *Weights—25,200 to 26,900 for the DC–3 and 18,500 to 19,500 for the L–18.* New maximum certificated weights of more than 25,200 but not more than 26,900 pounds for DC–3 and more than 18,500 but not more than 19,500 pounds for L–18 airplanes may be established in accordance with the transport category performance requirements of either Part 4a or Part 4b, if the airplane at the new maximum weights can meet the structural requirements of the elected part.

(b) *Weights of more than 26,900 for the DC–3 and 19,500 for the L–18.* New maximum certificated weights of more than 26,900 pounds for DC–3 and 19,500 pounds for L–18 airplanes shall be established in accordance with the structural, performance, flight characteristics, and ground handling requirements of Part 4b: *Provided,* That where literal compliance with the structural requirements of Part 4b is extremely difficult to accomplish and would not contribute materially to the objective sought, and the Administrator finds that the experience with the DC–3 or L–18 airplanes justifies it, he is authorized to accept such measures of compliance as he finds will effectively accomplish the basic objective.

(c) *Airplane flight manual—performance operating information.* An approved airplane flight manual shall be provided for each DC–3 and L–18 airplane which has had new maximum certificated weights established under this section. The airplane flight manual shall contain the applicable performance information prescribed in that part of the regulations under which the new certificated weights were established and such additional information as may be necessary to enable the application of the takeoff, en route, and landing limitations prescribed for transport category airplanes in the operating parts of the Civil Air Regulations.

(d) *Performance operating limitations.* Each airplane for which new maximum certificated weights are established in accordance with paragraphs (a) or (b) of this section shall be considered a transport category airplane for the purpose of complying with the performance operating limitations applicable to the operations in which it is utilized.

5. *Reference.* Unless otherwise provided, all references in this regulation to Part 4a and Part 4b are those parts of the Civil Air Regulations in effect on September 1, 1953.

Note: Parts 4a and 4b as amended and in effect on September 1, 1953, were published in the Federal Register at the following citations:

Part 4a, 14 F.R. 4072, 14 F.R. 3742, 14 F.R. 6769, 15 F.R. 28, 17 F.R. 11631.

Part 4b, 15 F.R. 3543, 15 F.R. 8903, 15 F.R. 9184, 16 F.R. 314, 16 F.R. 11759, 16 F.R. 12220, 17 F.R. 1087, 17 F.R. 11631, 18 F.R. 2213.

This regulation supersedes Special Civil Air Regulation SR–398 and shall remain effective until superseded or rescinded by the Board.

SPECIAL CIVIL AIR REGULATION NO. SR-411A

Effective: July 1, 1957
Adopted: June 28, 1957

Trial Operation of Transport Category Airplanes in Cargo Service at Increased Zero Fuel and Landing Weights

On June 30, 1955, the Civil Aeronautics Board adopted Special Civil Air Regulation No. SR-411 authorizing for a period of 2 years' trial operations of transport category airplanes in cargo service at weights in excess of those permitted in passenger service. The weights involved are the zero fuel weight (maximum weight of the airplane with no disposable fuel and oil) and the structural landing weight. The use of the higher weights is made contingent upon certain findings by the Administrator and upon certain conditions of operation and inspection.

Prior to the adoption of SR-411, trial operations of Douglas DC-6A airplanes at higher weights were authorized in orders issued by the Board to individual carriers. The first of such orders was issued on July 21, 1954. Authorization of the trial operations was predicated on the premise that such operations could eventually lead to the establishment of a sound basis for differentiating between standards for passenger and cargo air carrier operations. The success of the trial operations under the Board's orders led to the promulgation of SR-411 which permits any number of any type of transport category airplane to be operated at increased weights in cargo service. The basic intent of SR-411 was to obtain a more extensive background of operating experience to assure that the conditions governing the trial operations do in fact provide a sound basis for establishing possible future standards for airplanes in cargo operations.

Prior to the effective date of SR-411, there were a total of 6 DC-6A airplanes being used by 3 operators under waivers at higher weights. As of December 30, 1956, such operations encompassed 23 DC-6A airplanes and 5 operators. More recently Lockheed L1049-H airplanes have been introduced in cargo service at increased weights. Results of inspections submitted thus far to the Board have revealed no serious structural defects which could be attributed to operation at the increased weights.

In the preamble to SR-411, the Board indicated that it expected to have interested persons submit their evaluation of the trial operations and recommendations with respect to future regulatory action. In this regard, industry segments directly related to the trial operations under SR-411 recommended that the authorization for trial operations be continued on the basis that such operations have not resulted in any indications of structural distress and on the basis of the economic importance of such trial operations to the promotion and success of cargo service. Based on the foregoing and on the evaluation of the inspection and operational reports submitted by the air carriers, the Board finds that there is sufficient justification to permit the continuation of trial operations beyond June 30, 1957, the termination date of Special Civil Air Regulation No. SR-411. From the operational data submitted by the operators, the scope of operations under SR-411 has been such that substantiation of the conditions for these operations for inclusion in the regulations

542115 O—60——18

on a permanent basis will entail a long range program. Consequently, the termination date of this regulation is being established to permit trial operations for an additional five-year period.

In connection with the rulemaking procedures effected on this matter, it was suggested that the Board extend the trial operations for a period no longer than one or two years on the premise that the shorter time extension would permit closer control of these operations. The Board fails to find any relationship between the extension period and the quality of control exerted over the trial operations inasmuch as the Board intends to continue its evaluation of the inspection reports submitted by the operators at regular intervals and envisions that the industry and the Administrator will do likewise.

Suggestions were also received to the effect that the trial operations should not be limited only to the older type airplanes, as proposed in the notice of proposed rulemaking; i.e., to airplanes certificated prior to March 13, 1956. In this regard, the Board considers that in view of the new concept of structural design requirements as well as other related changes in these requirements which were introduced on the aforementioned date into Part 4b of the Civil Air Regulations along with the new concept of structural design, it is advisable that some experience be gained with airplanes certificated under those provisions at the normal transport category weights before permitting such airplanes to operate at the higher weight. Accordingly, this special regulation extends the authorization to operate at higher weights only to airplanes certificated in accordance with the transport category requirements in effect prior to March 13, 1956.

It should be noted that, as indicated in the preamble to SR–411, the Board envisions that most of the airplanes taking advantage of this regulation will continue to be used in cargo service solely. However, if any of the airplanes operated under the provisions of this regulation are to be made eligible at any later time for passenger service, the provisions of this regulation require accomplishment of a special inspection and an evaluation of the fatigue limitations. It is suggested that, if it is contemplated to return the airplane to passenger service, the establishment of special inspections and the evaluation of the fatigue limitations be accomplished prior to increasing the airplane weight for cargo service. It is not the intent of this regulation to permit intermittent operations in passenger and cargo service.

The provisions of this regulation differ from the provisions of Special Civil Air Regulation No. SR–411 in that they are made applicable only to airplanes certificated in accordance with the transport category structural requirements effective prior to March 13, 1956; they require inspection and flight data records to be kept available for no longer than one year; and they require flight records (as distinguished from inspection records) to be made only with respect to those flights involving increased weights, rather than for all flights regardless of whether or not they are made at the increased weights.

Interested persons have been afforded an opportunity to participate in the making of this regulation (22 F.R. 3416), and due consideration has been given to all relevant matter presented. Since this regulation

imposes no additional burden on any persons, it may be made effective on less than 30 days' notice.

In consideration of the foregoing, the Civil Aeronautics Board hereby makes and promulgates the following Special Civil Air Regulation, effective July 1, 1957.

Notwithstanding the applicable structural provisions of the Civil Air Regulations, any air carrier may operate in cargo service transport category airplanes which were certificated under the provisions of Part 4a or Part 4b, effective prior to March 13, 1956, subject to the conditions hereinafter set forth:

(1) The air carrier shall submit an application to the Administrator indicating its desire to operate its airplane(s) under the provisions of this special regulation, and indicating which airplane(s) would be involved.

(2) The air carrier shall furnish a statement from each manufacturer for each type of airplane involved indicating in each case that the airplane manufacturer approves the operation of such type of airplane under the provisions of this regulation and that the airplane manufacturer will establish the inspection procedure prescribed in paragraph (4) of this Special Civil Air Regulation and will supervise such inspection as necessary.

(3) The zero fuel weight (maximum weight of the airplane with no disposable fuel and oil) and the structural landing weight may be increased beyond the maxima approved in full compliance with the applicable Civil Air Regulations: *Provided,* That the Administrator of Civil Aeronautics finds that the increase in either such weight is not likely to reduce seriously the structural strength, that the probability of sudden fatigue failure is not noticeably increased, and that the flutter, deformation, and vibration characteristics do not fall below those required by the Civil Air Regulations: *And provided further,* That any increase in the zero fuel weight approved shall not exceed 5 percent and that the increase in the structural landing weight shall not exceed the amount, in pounds, of the increase in the zero fuel weight.

(4) Airplanes for which the increased weights become effective shall be subject to inspections in addition to those normally performed, such inspections to be established by the manufacturer of the type airplane concerned, subject to the approval of the Administrator of Civil Aeronautics and to be supervised as found necessary by that manufacturer, to safeguard against possible structural distress resulting from the higher operating stress levels. The air carrier shall keep for a period of at least one year, and make available upon request to the Civil Aeronautics Board, the Administrator of Civil Aeronautics, or the manufacturer of the type of airplane concerned, the records of such inspections.

(5) Airplanes for which the increased weights become effective shall be operated in accordance with the transport category performance operating limitations prescribed in Part 40, 41, or 42 of the Civil Air Regulations, whichever is applicable.

(6) The air carrier shall keep for a period of at least one year and make available upon request to the Civil Aeronautics Board, the

Administrator of Civil Aeronautics, or the manufacturer of the type airplane concerned, records of all flights conducted at increased weights with airplanes for which the increased weights become effective, such records to include the actual takeoff, zero fuel, and landing weights.

(7) The Airplane Flight Manual of each airplane operating under the provisions of this special regulation shall be appropriately revised so as to include the necessary operating limitations and operating information.

(8) An airplane which has been operated at increased weights under the provisions of this regulation shall not be used for the carriage of passengers, except under the following conditions:

(a) Special inspections established by the manufacturer and approved by the Administrator of Civil Aeronautics shall have been accomplished.

(b) The effects of the operations at increased weights on structural fatigue shall have been evaluated by the airplane manufacturer and taken into account in any fatigue limitations established for the airplane.

This regulation shall terminate on June 30, 1962, unless sooner superseded or rescinded by the Board.

SPECIAL CIVIL AIR REGULATION NO. SR–422

Effective: August 27, 1957
Adopted: July 23, 1957

Turbine-Powered Transport Category Airplanes of Current Design

Part 4b of the Civil Air Regulations contains rules governing the design of transport category airplanes. For a number of years, this part has established airworthiness requirements for this category of airplanes by prescribing detailed provisions to be met for the issuance of a type certificate. However, the advent of turbine-powered airplanes (jets, turboprops, etc.) has brought about operations at considerably higher speeds and altitudes than those involving reciprocating engine airplanes. These higher speeds and altitudes as well as certain inherent characteristics of turbine engines have introduced numerous new technical and design problems and have necessitated re-evaluation and amendment of many provisions in Part 4b.

In recent years the Board has amended Part 4b by introducing numerous technical provisions more specifically applicable to turbine-powered airplanes. These were included in amendments pertaining to structural, flight characteristic, powerplant installation, and other provisions. It is believed that Part 4b as now written is applicable to turbine-powered airplanes with but one exception; namely, airplane performance. In the future, further amendments to this part, other than those relating to performance, will be comparatively minor in nature mainly reflecting the latest experience in the certification and operation of these airplanes.

The performance requirements presently in Part 4b were first promulgated almost twelve years ago. They are now considered by the Board to be in a form not suitable for direct application to turbine-powered airplanes.

The administrator of Civil Aeronautics is in receipt of a large number of applications for type certification of turbine-powered airplanes. However, the so-called "non-retroactive"clause of section 4b.11(a) of Part 4b does not make applicable to a particular airplane type any amendment which is adopted after an application is filed by the manufacturer for type certification of that airplane. Thus, most of these airplanes are not now required to meet some of the latest effective provisions of Part 4b unless the Board prescribes otherwise. With so many applications for type certificates pending, it is essential that the Board establish adequate requirements which will effectively apply to the type certification of turbine-powered transport category airplanes. This Special Civil Air Regulation is being promulgated for that purpose.

This Special Civil Air Regulation is being made effective with respect to all turbine-powered transport category airplanes not yet certificated. In essence, it prescribes a revised set of performance requirements for turbine-powered airplanes and incorporates such of the recent amend-

ments to Part 4b as the Administrator finds necessary to insure that the level of safety of turbine-powered airplanes is equivalent to that generally intended by Part 4b.

The performance requirements contained herein include not only the performance requirements necessary for the certification of an airplane, but also the complementary performance operating limitations as applicable under Parts 40, 41, and 42 of the Civil Air Regulations. In promulgating this new performance code, the Board intends that the resulting level of safety will be generally similar to the level of safety established by the performance code as expressed by the provisions now contained in Parts 4b and 40 (or 41 or 42 as appropriate) for reciprocating engine airplanes. To attain this, many of the performance provisions have been modified for better applicability to turbine-powered airplanes, some in the direction of liberalization, others in the direction of improvement in the required performance.

A significant change being made is the introduction of full temperature accountability in all stages of performance, except the landing distances required. The introduction of full temperature accountability will insure that the airplane's performance is satisfactory irrespective of the existing atmospheric temperature. The performance requirements heretofore applicable did not give sufficient assurance in this respect.

The reason for omitting the direct application of temperature accountability in the requirement for landing distances is that this stage of performance always has been treated in a highly empirical fashion whereby temperature effects are taken into account indirectly together with the effects of other operational factors. Long range studies on rationalization of airplane performance so far have not yielded a satisfactory solution to the landing stage of performance. The Board hopes, however, that continued studies will result in a solution of this problem in the near future.

The introduction of full temperature accountability has necessitated a complete re-evaluation of the minimum climb requirements. Since the prescribed climb must now be met at all temperatures rather than to be associated with standard temperature, the specific values of climb have been altered. In each instance, the change has been in the downward direction because, although the previous values were related to standard temperature, a satisfactory resultant climb performance was attained at temperatures substantially above standard. While values of minimum climb performance specified in the new code will tend to increase the maximum certificated weights of the airplane for the lower range of temperatures, they will limit these weights for the upper range of temperatures, giving adequate assurance of satisfactory climb performance at all temperatures.

In considering the various stages of flight where minimum values of climb have been heretofore established, the Board finds that in two of the stages (all-engines-operating en route and one-engine-inoperative en route) the establishment of minimum values of climb is unnecessary because, in the case of the all-engines-operating stage, it has been found not to be critical and the case of the one-engine-inoperative stage is now more effectively covered by the en route performance operating limitations.

Considering that the minimum climbs being prescribed affect mainly the maximum certificated weights of the airplane but not the maximum operating weights, the Board, in adopting the new performance code, places considerable emphasis on the ability of the airplane to clear obstacles on take-off and during flight. To this end, criteria for the take-off path, the en route flight paths, and the transition from take-off to the en route stage of flight have been prescribed to reflect realistic operating procedures. Temperature is fully accounted for in establishing all flight paths and an expanding clearance between the take-off path and the terrain or obstacles is required until the en route stage of flight is reached.

In order to insure that the objectives of the prescribed performance are in fact realized in actual operations, the manufacturer is required to establish procedures to be followed in the operation of the airplane in the various conditions specified in the regulation. These procedures, each designed for a specific airplane, will permit the operator to utilize the full performance capabilities of the airplane more readily than if the regulations prescribed all-inclusive procedures. The use of these procedures in determining compliance with the requirements governing take-off, en route, and landing stages, will also add considerable flexibility to the regulation.

The new performance requirements established more clearly than heretofore which of the performance limitations are conditions on the airworthiness certificate of the airplane. In addition to the maximum certificated take-off and landing weights, there are included limitations on the take-off distances and on the use of the airplane within the ranges of operational variables, such as altitude, temperature, and wind. Since these limitations are in the airworthiness certificate, they are applicable to all type operations conducted with the airplane.

The new performance code contains values for minimum climb expressed as gradients of climb, in percent, rather than as rates of climb, in feet per minute, as has been the case heretofore. The Board believes that the gradient of climb is more direct in expressing the performance margins of the airplane. Use of the gradient eliminates the influence of the stalling speed on the required climb. Heretofore, higher rates of climb were required for airplanes with higher stalling speeds. The only differentiation in the new code with respect to the required climb is between two and four-engine airplanes. This type of differentiation is of long standing in the regulations, being applicable to the one-engine-inoperative stage of flight. It is now being expanded to the take-off and approach stages.

The new performance requirements contained herein are based on the best information presently available to the Board. It is realized, however, that due to the present limited operating experience with turbine-powered transport airplanes, improvement in the requirements can be expected as a result of the direct application of the code to specific designs of new airplanes. There are certain areas in the new requirements where additional refinement of details might be advisable. This is so particularly in the case of the requirements pertaining to the landing stage of flight. It is anticipated that, after further study of the regulation and especially after its application in the design, certification, and operation of forthcoming turbine-powered airplanes, the desirability of changes

may become more apparent. It is the intent of the Board to consider without delay such changes as might be found necessary. Only after the provisions of this Special Civil Air Regulation are reasonably verified by practical application will the Board consider incorporating them on a more permanent basis into Parts 4b, 40, 41, and 42 of the Civil Air Regulations.

This Special Civil Air Regulation is not intended to compromise the authority of the Administrator under section 4b.10 to impose such special conditions as he finds necessary in any particular case to avoid unsafe design features and otherwise to insure equivalent safety.

Interested persons have been afforded an opportunity to participate in the making of this regulation (21 F.R. 6091), and due consideration has been given to all relevant matter presented.

In consideration of the foregoing, the Civil Aeronautics Board hereby makes and promulgates the following Special Civil Air Regulation, effective August 27, 1957.

Contrary provisions of the Civil Air Regulations notwithstanding, all turbine-powered transport category airplanes for which a type certificate is issued after the effective date of this Special Civil Air Regulation shall comply with the following:

1. The provisions of Part 4b of the Civil Air Regulations, effective on the date of application for type certificate; and such of the provisions of all subsequent amendments to Part 4b, in effect prior to the effective date of this special regulation, as the Administrator finds necessary to insure that the level of safety of turbine-powered airplanes is equivalent to that generally intended by Part 4b.

2. In lieu of sections 4b.110 through 4b.125, and 4b.743 of Part 4b of the Civil Air Regulations, the following shall be applicable:

PERFORMANCE

4T.110 *General.*

(a) The performance of the airplane shall be determined and scheduled in accordance with, and shall meet the minima prescribed by, the provisions of sections 4T.110 through 4T.123. The performance limitations, information, and other data shall be given in accordance with section 4T.743.

(b) Unless otherwise specifically prescribed, the performance shall correspond with ambient atmospheric conditions and still air. Humidity shall be accounted for as specified in paragraph (c) of this section.

(c) The performance as affected by engine power and/or thrust shall be based on a relative humidity of 80 percent at and below standard temperatures and on 34 percent at and above standard temperatures plus 50° F. Between these two temperatures the relative humidity shall vary linearly.

(d) The performance shall correspond with the propulsive thrust available under the particular ambient atmospheric conditions, the particular flight conditions, and the relative humidity specified in paragraph (c) of this section. The available propulsive thrust shall correspond with engine power and/or thrust not exceeding the approved power and/or thrust less the installational losses and less the power and/or

equivalent thrust absorbed by the accessories and services appropriate to the particular ambient atmospheric conditions and the particular flight condition.

4T.111 *Airplane configuration, speed, power, and/or thrust; general.*

(a) The airplane configuration (setting of wing and cowl flaps, air brakes, landing gear, propeller, etc.), denoted respectively as the take-off, en route, approach, and landing configurations, shall be selected by the applicant except as otherwise prescribed.

(b) It shall be acceptable to make the airplane configurations variable with weight, altitude, and temperature, to an extent found by the Administrator to be compatible with operating procedures required in accordance with paragraph (c) of this section.

(c) In determining the accelerate-stop distances, take-off flight paths, take-off distances, and landing distances, changes in the airplane's configuration and speed, and in the power and/or thrust shall be in accordance with procedures established by the applicant for the operation of the airplane in service, except as otherwise prescribed. The procedures shall comply with the provisions of subparagraphs (1) through (3) of this paragraph.

(1) The Administrator shall find that the procedures can be consistently executed in service by crews of average skill.

(2) The procedures shall not involve methods or the use of devices which have not been proven to be safe and reliable.

(3) Allowance shall be made for such time delays in the execution of the procedures as may be reasonably expected to occur during service.

4T.112 *Stalling speeds.*

(a) The speed V_{s_0} shall denote the calibrated stalling speed, or the minimum steady flight speed at which the airplane is controllable, in knots, with:

(1) Zero thrust at the stalling speed, or engines idling and throttles closed if it is shown that the resultant thrust has no appreciable effect on the stalling speed;

(2) If applicable, propeller pitch controls in the position necessary for compliance with subparagraph (1) of this paragraph;

(3) The airplane in the landing configuration;

(4) The center of gravity in the most unfavorable position within the allowable landing range;

(5) The weight of the airplane equal to the weight in connection with which V_s is being used to determine compliance with a particular requirement.

(b) The speed V_{s_1} shall denote the calibrated stalling speed, or the minimum steady flight speed at which the airplane is controllable, in knots, with:

(1) Zero thrust at the stalling speed, or engines idling and throttles closed if it is shown that the resultant thrust has no appreciable effect on the stalling speed;

(2) If applicable, propeller pitch controls in the position necessary for compliance with subparagraph (1) of this paragraph; the air-

plane in all other respects (flaps, landing gear, etc.) in the particular configuration corresponding with that in connection with which V_{s_1} is being used;

(3) The weight of the airplane equal to the weight in connection with which V_{s_1} is being used to determine compliance with a particular requirement.

(c) The stall speeds defined in this section shall be the minimum speeds obtained in flight tests conducted in accordance with the procedure of subparagraphs (1) and (2) of this paragraph.

(1) With the airplane trimmed for straight flight at a speed of 1.4 V_s and from a speed sufficiently above the stalling speed to insure steady conditions, the elevator control shall be applied at a rate such that the airplane speed reduction does not exceed one knot per second.

(2) During the test prescribed in subparagraph (1) of this paragraph, the flight characteristics provisions of section 4b.160 of Part 4b of the Civil Air Regulations shall be complied with.

4T.113 *Take-off; general.*

(a) The take-off data in sections 4T.114 through 4T.117 shall be determined under the conditions of subparagraphs (1) and (2) of this paragraph.

(1) At all weights, altitudes, and ambient temperatures within the operational limits established by the applicant for the airplane.

(2) In the configuration for take-off (see sec. 4T.111).

(b) Take-off data shall be based on a smooth, dry, hard-surfaced runway, and shall be determined in such a manner that reproduction of the performance does not require exceptional skill or alertness on the part of the pilot. In the case of seaplanes or float planes, the take-off surface shall be smooth water, while for skiplanes it shall be smooth dry snow. In addition, the take-off data shall be corrected in accordance with subparagraphs (1) and (2) of this paragraph for wind and for runway gradients within the operational limits established by the applicant for the airplane.

(1) Not more than 50 percent of nominal wind components along the take-off path opposite to the direction of take-off, and not less than 150 percent of nominal wind components along the take-off path in the direction of take-off.

(2) Effective runway gradients.

4T.114 *Take-off speeds.*

(a) The critical-engine-failure speed V_1, in terms of calibrated air speed, shall be selected by the applicant, but shall not be less than the minimum speed at which controllability by primary aerodynamic controls alone is demonstrated during the take-off run to be adequate to permit proceeding safely with the take-off using average piloting skill, when the critical engine is suddenly made inoperative.

(b) The minimum take-off safety speed V_2, in terms of calibrated air speed, shall be selected by the applicant so as to permit the gradient of climb required in section 4T.120 (a) and (b), but it shall not be less than:

(1) 1.2 V_{s_1} for two-engine propeller-driven airplanes and for airplanes without propellers which have no provisions for obtaining a significant reduction in the one-engine-inoperative power-on stalling speed.

(2) 1.15 V_{s_1} for propeller-driven airplanes having more than two engines and for airplanes without propellers which have provisions for obtaining a significant reduction in the one-engine-inoperative power-on stalling speed;

(3) 1.10 times the minimum control speed V_{MC}, established in accordance with section 4b.133 of Part 4b of the Civil Air Regulations.

(c) If engine failure is assumed to occur at or after the attainment of V_2, the demonstration in which the take-off run is continued to include the take-off climb, as provided in paragraph (a) of this section, shall not be required.

4T.115 *Accelerate-stop distance.*

(a) The accelerate-stop distance shall be the sum of the following:

(1) The distance required to accelerate the airplane from a standing start to the speed V_1;

(2) Assuming the critical engine to fail at the speed V_1, the distance required to bring the airplane to a full stop from the point corresponding with the speed V_1.

(b) In addition to, or in lieu of, wheel brakes, the use of other braking means shall be acceptable in determining the accelerate-stop distance, provided that such braking means shall have been proven to be safe and reliable, that the manner of their employment is such that consistent results can be expected in service, and that exceptional skill is not required to control the airplane.

(c) The landing gear shall remain extended throughout the accelerate-stop distance.

4T.116 *Take-off path.* The take-off path shall be considered to extend from the standing start to a point in the take-off where a height of 1,000 feet above the take-off surface is reached or to a point in the take-off where the transition from the take-off to the en route configuration is completed and a speed is reached at which compliance with section 4T.120(c) is shown, whichever point is at a higher altitude. The conditions of paragraphs (a) through (i) of this section shall apply in determining the take-off path.

(a) The take-off path shall be based upon procedures prescribed in accordance with section 4T.111(c).

(b) The airplane shall be accelerated on or near the ground to the speed V_2 during which time the critical engine shall be made inoperative at speed V_1 and shall remain inoperative during the remainder of the take-off.

(c) Landing gear retraction shall not be initiated prior to reaching the speed V_2.

(d) The slope of the airborne portion of the take-off path shall be positive at all points.

(e) After the V_2 speed is reached, the speed throughout the take-off path shall not be less than V_2 and shall be constant from the point where the landing gear is completely retracted until a height of 400 feet above the take-off surface is reached.

(f) Except for gear retraction and propeller feathering, the airplane configuration shall not be changed before reaching a height of 400 feet above the take-off surface.

(g) At all points along the take-off path starting at the point where the airplane first reaches a height of 400 feet above the take-off surface, the available gradient of climb shall not be less than 1.4 percent for two-engine airplanes and 1.8 percent for four-engine airplanes.

(h) The take-off path shall be determined either by a continuous demonstration take-off, or alternatively, by synthesizing from segments the complete take-off path.

(i) If the take-off path is determined by the segmental method, the provisions of subparagraphs (1) through (4) of this paragraph shall be specifically applicable.

(1) The segments of a segmental take-off path shall be clearly defined and shall be related to the distinct changes in the configuration of the airplane, in power and/or thrust, and in speed.

(2) The weight of the airplane, the configuration, and the power and/or thrust shall be constant throughout each segment and shall correspond with the most critical condition prevailing in the particular segment.

(3) The segmental flight path shall be based on the airplane's performance without ground effect.

(4) Segmental take-off path data shall be checked by continuous demonstrated take-offs to insure that the segmental path is conservative relative to the continuous path.

4T.117 *Take-off distance.* The take-off distance shall be the horizontal distance along the take-off path from the start of the take-off to the point where the airplane attains a height of 35 feet above the take-off surface as determined in accordance with 4T.116.

4T.118 *Climb; general.* Compliance shall be shown with the climb requirements of sections 4T.119 and 4T.120 at all weights, altitudes, and ambient temperatures, within the operational limits established by the applicant for the airplane. The airplane's center of gravity shall be in the most unfavorable position corresponding with the applicable configuration.

4T.119 *All-engine-operating landing climb.* In the landing configuration, the steady gradient of climb shall not be less than 4.0 per cent, with:

(a) All engines operating at the available take-off power and/or thrust;

(b) A climb speed not in excess of 1.4 V_{s_0}.

4T.120 *One-engine-inoperative climb.*

(a) *Take-off; landing gear extended.* In the take-off configuration at the point of the flight path where the airplane's speed first reaches V_2, in accordance with section 4T.116 but without ground effect, the steady gradient of climb shall be positive with:

(1) The critical engine inoperative, the remaining engine(s) operating at the available take-off power and/or thrust existing in accordance with section 4T.116 at the time the airplane's landing gear is fully retracted;

(2) The weight equal to the airplane's weight existing in accordance with section 4T.116 at the time retraction of the airplane's landing gear is initiated;

(3) The speed equal to the speed V_2.

(b) *Take-off; landing gear retracted.* In the take-off configuration at the point of the flight path where the airplane's landing gear is fully retracted, in accordance with section 4T.116 but without ground effect, the steady gradient of climb shall not be less than 2.5 percent for two-engine airplanes and not less than 3.0 percent for four-engine airplanes, with:

(1) The critical engine inoperative, the remaining engine(s) operating at the take-off power and/or thrust available at a height of 400 feet above the take-off surface and existing in accordance with section 4T.116;

(2) The weight equal to the airplane's weight existing in accordance with section 4T.116 at the time the airplane's landing gear is fully retracted;

(3) The speed equal to the speed V_2.

(c) *Final take-off.* In the en route configuration, the steady gradient of climb shall not be less than 1.4 percent for two-engine airplanes and not less than 1.8 percent for four-engine airplanes, at the end of the take-off path as determined by section 4T.116, with:

(1) The critical engine inoperative, the remaining engine(s) operating at the available maximum continuous power and/or thrust;

(2) The weight equal to the airplane's weight existing in accordance with section 4T.116 at the time retraction of the airplane's flaps is initiated;

(3) The speed equal to not less than 1.25 V_{s_1}.

(d) *Approach.* In the approach configuration such that V_{s_1} does not exceed 1.10 V_{s_0}, the steady gradient of climb shall not be less than 2.2 percent for two-engine airplanes and not less than 2.8 percent for four-engine airplanes, with:

(1) The critical engine inoperative, the remaining engine(s) operating at the available take-off power and/or thrust;

(2) The weight equal to the maximum landing weight;

(3) A climb speed in excess of 1.5 V_{s_1};

4T.121 *En route flight paths.* With the airplane in the en route configuration, the flight paths prescribed in paragraphs (a) and (b) of this section shall be determined at all weights, altitudes, and ambient temperatures within the limits established by the applicant for the airplane.

(a) *One engine inoperative.* The one-engine-inoperative net flight path data shall be determined in such a manner that they represent the airplane's actual climb performance diminished by a gradient of climb equal to 1.4 percent for two-engine airplanes and 1.8 percent for four-engine airplanes. It shall be acceptable to include in these data the variation of the airplane's weight along the flight path to take into account the progressive consumption of fuel and oil by the operating engine(s).

(b) *Two engines inoperative.* For airplanes with four engines, the two-engine-inoperative net flight path data shall be determined in such a manner that they represent the airplane's actual climb performance diminished by a gradient of climb equal to 0.6 percent. It shall be acceptable to include in these data the variation of the airplane's weight

along the flight path to take into account the progressive consumption of fuel and oil by the operating engines.

(c) *Conditions.* In determining the flight paths prescribed in paragraphs (a) and (b) of this section, the conditions of subparagraphs (1) through (4) of this paragraph shall apply.

(1) The airplane's center of gravity shall be in the most unfavorable position.

(2) The critical engine(s) shall be inoperative, the remaining engine(s) operating at the available maximum continuous power and/or thrust.

(3) Means for controlling the engine cooling air supply shall be in the position which provides adequate cooling in the hot-day condition.

(4) The speed shall be selected by the applicant.

4T.122 *Landing distance.* The landing distance shall be the horizontal distance required to land and to come to a complete stop (to a speed of approximately 3 knots in the case of seaplanes or float planes) from a point at a height of 50 feet above the landing surface. Landing distances shall be determined for standard temperatures at all weights, altitudes, and winds within the operational limits established by the applicant for the airplane. The conditions of paragraphs (a) through (f) of this section shall apply.

(a) The airplane shall be in the landing configuration. During the landing, changes in the airplane's configuration, in power and/or thrust, and in speed shall be in accordance with procedures established by the applicant for the operation of the airplane in service. The procedures shall comply with the provisions of section 4T.111(c).

(b) The landing shall be preceded by a steady gliding approach down to the 50-foot height with a calibrated air speed of not less than 1.3 V_{s_0}.

(c) The landing distance shall be based on a smooth, dry, hard-surfaced runway, and shall be determined in such a manner that reproduction does not require exceptional skill or alertness on the part of the pilot. In the case of seaplanes or float planes, the landing surface shall be smooth water, while for skiplanes it shall be smooth dry snow. During landing, the airplane shall not exhibit excessive vertical acceleration, a tendency to bounce, nose over, ground loop, porpoise, or water loop.

(d) The landing distance shall be corrected for not more than 50 percent of nominal wind components along the landing path opposite to the direction of landing and not less than 150 percent of nominal wind components along the landing path in the direction of landing.

(e) During landing, the operating pressures on the wheel braking system shall not be in excess of those approved by the manufacturer of the brakes, and the wheel brakes shall not be used in such a manner as to produce excessive wear of brakes and tires.

(f) If the Administrator finds that a device on the airplane other than wheel brakes has a noticeable effect on the landing distance and if the device depends upon the operation of the engine and the effect of such a device is not compensated for by other devices in the event of engine failure, the landing distance shall be determined by assuming the critical engine to be inoperative.

4T.123 *Limitations and information.*

(a) *Limitations.* The performance limitations on the operation of the airplane shall be established in accordance with subparagraphs (1) through (4) of this paragraph. (See also sec. 4T.743.)

(1) *Take-off weights.* The maximum take-off weights shall be established at which compliance is shown with the generally applicable provisions of this regulation and with section 4T.120 (a), (b), and (c) for altitudes and ambient temperatures within the operational limits of the airplane (see subparagraph (4) of this paragraph).

(2) *Landing weights.* The maximum landing weights shall be established at which compliance is shown with the generally applicable provisions of this regulation and with sections 4T.119 and 4T.120(d) for altitudes and ambient temperatures within the operational limits of the airplane (see subparagraph (4) of this paragraph).

(3) *Take-off and accelerate-stop distances.* The minimum distances required for takeoff shall be established at which compliance is shown with the generally applicable provisions of this regulation and with sections 4T.115 and 4T.117 for weights, altitudes, temperatures, wind components, and runway gradients, within the operational limits of the airplane (see subparagraph (4) of this paragraph).

(4) *Operational limits.* The operational limits of the airplane shall be established by the applicant for all variable factors required in showing compliance with this regulation (weight, altitude, temperature, etc.). (See secs. 4T.113(a) (1) and (b), 4T.118, 4T.121, and 4T.122.)

(b) *Information.* The performance information on the operation of the airplane shall be scheduled in compliance with the generally applicable provisions of this regulation and with sections 4T.116, 4T.121, and 4T.122 for weights, altitudes, temperatures, wind components, and runway gradients, as these may be applicable, within the operational limits of the airplane (see subparagraph (a)(4) of this section). In addition, the performance information specified in subparagraphs (1) through (3) of this paragraph shall be determined by extrapolation and scheduled for the ranges of weights between the maximum landing and maximum take-off weights established in accordance with subparagraphs (a)(1) and (a)(2) of this section. (See also sec. 4T.743.)

(1) Climb in the landing configuration (see sec. 4T.119);

(2) Climb in the approach configuration (see sec. 4T.120(d));

(3) Landing distance (see sec. 4T.122).

AIRPLANE FLIGHT MANUAL

4T.743 *Performance limitations, information, and other data.*

(a) *Limitations.* The airplanes' performance limitations shall be given in accordance with section 4T.123(a).

(b) *Information.* The performance information prescribed in section 4T.123(b) for the application of the operating rules of this regulation shall be given together with descriptions of the conditions, air speeds, etc., under which the data were determined.

(c) *Procedures.* For all stages of flight, procedures shall be given with respect to airplane configurations, power and/or thrust settings, and indicated air speeds, to the extent such procedures are related

to the limitations and information set forth in accordance with paragraphs (a) and (b) of this section.

(d) *Miscellaneous.* An explanation shall be given of significant or unusual flight or ground handling characteristics of the airplane.

3. In lieu of sections 40.70 through 40.78, 41.27 through 41.36(d), and 42.70 through 42.83, of Parts 40, 41, and 42 of the Civil Air Regulations, respectively, the following shall be applicable:

OPERATING RULES

40T.80 *Transport category airplane operating limitations.*

(a) In operating any passenger-carrying transport category airplane certificated in accordance with the performance requirements of this regulation, the provisions of sections 40T.80 through 40T.84 shall be complied with, unless deviations therefrom are specifically authorized by the Administrator on the ground that the special circumstances of a particular case make a literal observance of the requirements unnecessary for safety.

(b) The performance data in the Airplane Flight Manual shall be applied in determining compliance with the provisions of sections 40T.81 through 40T.84. Where conditions differ from those for which specific tests were made compliance shall be determined by approved interpolation or computation of the effects of changes in the specific variables if such interpolations or computations give results substantially equalling in accuracy the results of a direct test.

40T.81 *Airplane's certificate limitations.*

(a) No airplane shall be taken off at a weight which exceeds the take-off weight specified in the Airplane Flight Manual for the elevation of the airport and for the ambient temperature existing at the time of the take-off. (See secs. 4T.123(a)(1) and 4T.743(a).)

(b) No airplane shall be taken off at a weight such that, allowing for normal consumption of fuel and oil in flight to the airport of destination, the weight on arrival will exceed the landing weight specified in the Airplane Flight Manual for the elevation of the airport of destination and for the ambient temperature anticipated there at the time of landing. (See secs. 4T.123(a)(2) and 4T.743(a).)

(c) No airplane shall be taken off at a weight which exceeds the weight shown in the Airplane Flight Manual to correspond with the minimum distance required for take-off on the runway to be used. The take-off distance shall correspond with the elevation of the airport, the effective runway gradient, and the ambient temperature and wind component existing at the time of take-off. (See secs. 4T.123(a)(3) and 4T.743 (a).)

(d) No airplane shall be operated outside the operational limits specified in the Airplane Flight Manual. (See secs. 4T.123(a)(4) and 4T.743(a).)

40T.82 *Take-off obstacle clearance limitations.* No airplane shall be taken off at a weight in excess of that shown in the Airplane Flight Manual to correspond with a take-off path which clears all obstacles either by at least a height equal to $(35+0.01D)$ feet vertically, where D is the distance out along the intended flight path from the end of the runway in feet, or by at least 200 feet horizontally within the airport boundaries and by at

least 300 feet horizontally after passing beyond the boundaries. In determining the allowable deviation of the flight path in order to avoid obstacles by at least the distances prescribed, it shall be assumed that the airplane is not banked before reaching a height of 50 feet as shown by the take-off path data in the Airplane Flight Manual, and that a maximum bank thereafter does not exceed 15 degrees. The take-off path considered shall be for the elevation of the airport, the effective runway gradient, and for the ambient temperature and wind component existing at the time of take-off. (See secs. 4T.123(b) and 4T.743(b).)

40T. 83 *En route limitations.*

(a) *One engine inoperative.* No airplane shall be taken off at a weight in excess of that which, according to the one-engine-inoperative en route net flight path data shown in the Airplane Flight Manual, will permit compliance with either subparagraph (1) or subparagraph (2) of this paragraph at all points along the route. The net flight path used shall be for the ambient temperatures anticipated along the route. (See secs. 4T.123(b) and 4T.743(b).)

(1) The slope of the net flight path shall be positive at an altitude of at least 1,000 feet above all terrain and obstructions along the route within 5 miles on either side of the intended track.

(2) The net flight path shall be such as to permit the airplane to continue flight from the cruising altitude to an alternate airport where a landing can be made in accordance with the provisions of section 40T.84 (b), the net flight path clearing vertically by at least 2,000 feet all terrain and obstructions along the route within 5 miles on either side of the intended track. The provisions of subdivisions (i) through (vii) of this paragraph shall apply.

(i) The engine shall be assumed to fail at the most critical point along the route.

(ii) The airplanes shall be assumed to pass over the critical obstruction following engine failure at a point no closer to the critical obstruction than the nearest approved radio navigational fix, except that the Administrator may authorize a procedure established on a different basis where adequate operational safeguards are found to exist.

(iii) The net flight path shall have a positive slope at 1,000 feet above the airport used as the alternate.

(iv) An approved method shall be used to account for winds which would otherwise adversely affect the flight path.

(v) Fuel jettisoning shall be permitted if the Administrator finds that the operator has an adequate training program, proper instructions are given to the flight crew, and all other precautions are taken to insure a safe procedure.

(vi) The alternate airport shall be specified in the dispatch release and shall meet the prescribed weather minima.

(vii) The consumption of fuel and oil after the engine becomes inoperative shall be that which is accounted for in the net flight path data shown in the Airplane Flight Manual.

(b) *Two engines inoperative.* No airplane shall be flown along an intended route except in compliance with either subparagraph (1) or subparagraph (2) of this paragraph.

(1) No place along the intended track shall be more than 90

542115 O—60——19

minutes away from an airport at which a landing can be made in accordance with the provisions of section 40T.84(b), assuming all engines to be operating at cruising power.

(2) No airplane shall be taken off at a weight in excess of that which, according to the two-engine-inoperative en route net flight path data shown in the Airplane Flight Manual, will permit the airplane to continue flight from the point where two engines are assumed to fail simultaneously to an airport where a landing can be made in accordance with the provisions of section 40T.84(b), the net flight path having a positive slope at an altitude of at least 1,000 feet above all terrain and obstructions along the route within 5 miles on either side of the intended track or at an altitude of 5,000 feet, whichever is higher. The net flight path considered shall be for the ambient temperatures anticipated along the route. The provisions of subdivision (i) through (iii) of this subparagraph shall apply. (See secs. 4T.123(b) and 4T.743(b).)

(i) The two engines shall be assumed to fail at the most critical point along the route.

(ii) If fuel jettisoning is provided, the airplane's weight at the point where the two engines are assumed to fail shall be considered to be not less than that which would include sufficient fuel to proceed to the airport and to arrive there at an altitude of at least 1,000 feet directly over the landing area.

(iii) The consumption of fuel and oil after the engines become inoperative shall be that which is accounted for in the net flight path data shown in the Airplane Flight Manual.

40T.84 *Landing limitations.*

(a) *Airport of destination.* No airplane shall be taken off at a weight in excess of that which, in accordance with the landing distances shown in the Airplane Flight Manual for the elevation of the airport of intended destination and for the wind conditions anticipated there at the time of landing, would permit the airplane to be brought to rest at the airport of intended destination within 60 percent of the effective length of the runway from a point 50 feet directly above the intersection of the obstruction clearance plane and the runway. The weight of the airplane shall be assumed to be reduced by the weight of the fuel and oil expected to be consumed in flight to the airport of intended destination. Compliance shall be shown with the conditions of subparagraphs (1) and (2) of this paragraph. (See secs. 4T.123(b) and 4T.743(b).)

(1) It shall be assumed that the airplane is landed on the most favorable runway and direction in still air.

(2) It shall be assumed that the airplane is landed on the most suitable runway considering the probable wind velocity and direction and taking due account of the ground handling characteristics of the airplane and of other conditions (i.e., landing aids, terrain, etc.). If full compliance with the provisions of this subparagraph is not shown, the airplane may be taken off if an alternate airport is designated which permits compliance with paragraph (b) of this section.

(b) *Alternate airport.* No airport shall be designated as an alternate airport in a dispatch release unless the airplane at the weight anticipated at the time of arrival at such airport can comply with the provisions of paragraph (a) of this section, provided that the airplane can be brought to rest within 70 percent of the effective length of the runway.

SPECIAL CIVIL AIR REGULATION NO. SR–422A

Adopted: July 2, 1958
Effective: July 2, 1958

Turbine-Powered Transport Category Airplanes of Current Design

On July 23, 1957, the Board adopted Special Civil Air Regulation No. SR–422 which sets forth airworthiness requirements applicable to the type certification and operation of turbine-powered transport category airplanes for which a type certificate is issued after August 27, 1957. Included in that regulation was a new set of performance requirements, with respect to which the Board indicated that consideration would be given to any changes found necessary as a result of further study and experience. The preamble to SR–422 contains the relevant considerations leading to its promulgation and is considered to provide the basic background for this regulation.

Since the adoption of SR–422, considerable study has been devoted to the new performance requirements by all interested parties. As a result of these studies and of further experience gained in the design, certification, and operation of turbine-powered airplanes, certain issues with respect to SR–422 require re-evaluation. This regulation reflects the resolution of most of the outstanding issues in the light of the best information presently available to the Board.

The following provisions of this regulation differ from, or are additional to, the provisions of SR–422; Introductory paragraph; item 1; sections 4T.111(c); 4T.112; 4T.114 (b), (b)(1), (b)(4), and (c); introductory paragraph of 4T.116; 4T.116 (b), (c), (e), and (g); 4T.117; 4T.117a; 4T.119; 4T.120 (a), (a)(1), (b), (b)(1), (c), (c)(2), (c)(3), (d), and (d)(3); 4T.121 (a) and (b); introductory paragraph of 4T.122; 4T.122 (b), (f), and (g); 4T.123 (a)(1), (a)(2), (a)(3), and (b); 4T.743(c); 40T.81 (b) and (c); 40T.82; 40T.83 (a)(2)(iii), (b)(2), and (b)(2)(ii); item 4; and item 5. Of these provisions, the following differ from those proposed in Civil Air Regulations Draft Release No. 58–6: sections 4T.111(c); 4T.112(a)(4); 4T.114 (b)(4), (c), (c)(2), (c)(3), and (c)(4); 4T.116 (c) and (e); 4T.117 (b)(1) and (b)(2); 4T.119(a); 4T.120(a); 40T.81(c) and 43T.11(c).

With respect to the applicability of this regulation, experience with certification under SR–422 indicates that a lead time of about two months between the date of adoption of the regulation and the date of issuance of the type certificate should provide a reasonable period of time within which to show compliance with this regulation. In view of this, and in the interest of having uniform regulations applicable to most of the turbine-powered airplanes, it is considered advisable to have this regulation apply to all such airplanes for which a type certificate is issued after September 30, 1958. Turbine-powered transport category airplanes for which a type certificate is issued on or prior to September 30, 1958, may comply with the provisions of this regulation in lieu of SR–422. If

this option is exercised, it is intended that compliance be shown with all the provisions of this regulation and it is not intended to permit a showing of compliance with portions of this regulation and portions of SR–422.

The provisions of this regulation involve the following technical issues:

A substantive change is made by introducing an all-engines-operating take-off in establishing the take-off distance. Presently, the take-off distance is based only on a one-engine-out take-off. To insure that an adequate margin of safety will exist for day-in and day-out operations, the minimum take-off distance is being related to both the one-engine-inoperative distance now prescribed and to the distance with all engines operating, with a factor of 1.15 being applied to the latter.

There are also included important changes with respect to the speeds applicable to the take-off path. The provisions of SR–422 prescribe that the airplane shall be accelerated on or near the ground to the speed V_2. This provision has been subject to varying interpretations having a marked difference in effect on the resultant level of performance. The issue in this matter is whether or not the airplane should be permitted to lift off the runway at some speed below V_2. Because of the increased acceleration of turbine-powered airplanes, the tendency to overshoot the lift-off speed will be greater than on piston-engine airplanes and this tendency increases with the reduction in weight of the airplane. To restrict lift-off to the minimum take-off safety speed V_2 would unduly extend the take-off distance in cases where such overshooting of speed occurs. Such a restriction would be unnecessarily conservative and would not reflect realistic take-off procedures. For these reasons this regulation permits the airplane to lift off the ground at a speed lower than the V_2 speed, but prescribes certain limiting conditions. The lift-off speed is related to a rotational speed V_R which must not be less than 95 percent of the minimum V_2 speed and must be 10 percent greater than a speed at which no hazardous characteristics are displayed by the airplane, such as a relatively high drag condition or a ground stall. The V_2 speed has been re-defined to take into account the increment in speed arising from overshoot tendencies. Under the new definition, the minimum V_2 speed corresponds with the minimum take-off safety speed as now defined in SR–422. With respect to the take-off path, the V_2 speed is required to be attained prior to reaching a height of 35 feet above the take-off surface and thus is related to the selection of the rotational speed. Further, there is a revision which requires V_2 to be maintained as close as practicable at a constant value from the 35-foot point to a height of 400 feet above the take-off surface. This speed is the speed at which the prescribed minimum take-off gradients must be met.

There is introduced in this regulation the concept of unbalanced take-off field lengths. SR–422 does not preclude unbalancing of field lengths, provided that the unbalancing is within the length of the runway. Other countries have employed unbalancing with respect to so-called "stopways" and "clearways." It appears that United States operators ultimately will find it advantageous to resort to the use of unbalancing, but probably not to the same extent as practiced in other countries. On the premise that only clearways will be utilized, the amendments have been formulated accordingly. Clearways, as defined herein, are areas not suitable

for stopping the airplane in the event of an aborted take-off, but adequate to provide additional take-off distance for climb-out. To safeguard operations utilizing clearways, there is introduced the concept of a take-off run which operationally relates to the determination of the minimum runway length required. The take-off run is defined as the greater of the horizontal distances along the take-off path to a given point with one engine inoperative or with all engines operating, with a margin of 15 percent being added to the latter. The take-off run is measured from the beginning of take-off to a point equidistant between the point where the airplane lifts off and the point where a height of 35 feet is reached. The required runway length must not be less than the take-off run nor less than the accelerate stop distance.

According to the definition given, a clearway is subjected to the control of the airport authorities. It is not intended, however, that there be ownership by the airport authorities of the area in which the clearway lies. The objective for requiring control by the airport authorities is to insure that no flight will be initiated using a clearway unless it is determined with certainty that no movable obstacle will exist within the clearway when the airplane flies over.

It is anticipated that the introduction of clearways will offer further possibilities of increasing the utility of existing airport facilities in this country. When such areas can be integrated into existing facilities, economical benefits will accrue to the community and the operators. In addition, since clearways are presently available at some of the airports in other countries, United States operators will have the opportunity of taking advantage of such facilities.

There are included changes with respect to the prescribed minimum altitude of 1,000 feet relative to the take-off path and to the one-engine-inoperative and two-engine-inoperative requirements applicable to the vicinity of the airport. Heretofore, the Civil Air Regulations have incorporated the reference altitude of 1,000 feet in respect of performance criteria over the airport. Obscure as is the significance of this altitude operationally, the altitude of 1,500 feet has worldwide precedent of being used as the altitude above the airport at which, generally, IFR approaches are initiated and go-around procedures executed. For this reason, the changes made extend the take-off path to a minimum altitude of 1,500 feet and make this altitude applicable to the prescribed performance criteria above the airport for the one- and two-engine-inoperative en route requirements. It is not anticipated that these changes will create any problems with respect to the en route stages of flight; however, it is realized that a further extension of the take-off path might add to the problem of obtaining accurate data on obstacles relatively distant from the airport. The Board finds that the extension of the flight path to 1,500 feet is warranted in light of the operational significance of this altitude and because the extended flight paths will provide more fully for adequate terrain clearance at the end of the take-off path.

There is included a change with respect to the take-off path whereby the take-off flight path is established as starting from a 35-foot height at the end of the take-off distance and a net take-off flight is prescribed for operational use. This latter change is for consistency with the specification of net flight paths for the en route stages of flight and to simplify

determination of obstacle clearances operationally. The net flight path is specified to be the actual flight path diminished by a gradient of 1.0 percent. It is intended that the net flight path be obtained from the gross flight path by simple geometric means.

The change in the altitude from 1,000 to 1,500 feet previously mentioned, as well as a re-evaluation in other respects of some of the climb gradients in SR-422, justify certain changes. The gradients of 1.4 and 1.8 applicable to the take-off path and the final take-off climb are being reduced to 1.2 and 1.7 for two-engine and four-engine airplanes, respectively. In addition, the gradients of 1.4 and 1.8 in the one-engine-inoperative en route case are being reduced to 1.1 and 1.6, respectively.

Changes are made with respect to the one-engine-inoperative take-off climb by interrelating more realistically the prescribed airplane configuration, weight, and power. These changes, in effect, permit meeting the prescribed gradients of climb at slightly higher airplane weights than would be possible under the presently effective provisions.

There is included a change to the provisions applicable to the one-engine-inoperative take-off climb with landing gear extended which increases the prescribed minimum gradient from substantially zero to 0.5 percent for four-engine airplanes. This change is made to attain consistency in the difference between gradients applicable to twins and fours.

Changes are incorporated in connection with the two-engine-inoperative en route requirement. Representations have been made that the gradient of 0.6 percent now prescribed is unduly conservative. On the other hand, it has been pointed out that the fuel requirements for this case are not realistically covered. Both of these contentions warrant consideration and changes are included which reduce the margin gradient from 0.6 to 0.5 percent, reduce the prescribed altitude from 5,000 to 2,000 feet, and require scheduling the flight so that there is sufficient fuel on board to reach the airport and subsequently to fly for 15 minutes at cruise power or thrust.

Changes are also made relative to the approach and landing stages of flight. There is a new provision which requires the establishment of procedures for the execution of missed approaches and balked landings. A question has been raised as to whether the speed limitation of 1.5 V_s applicable to the approach condition is realistically related to the normal day-in and day-out landing procedures. To insure that it will be so related, it is required that the speed used for demonstrating the approach climb be established consistent with the landing procedures, but that it not exceed 1.5 V_s. In addition, the approach gradient of 2.8 percent prescribed for four-engine airplanes is being reduced to 2.7 percent to obtain consistency in the differences between gradients applicable to twins and fours.

A change is made to the "all-engines-operating landing climb" provisions which now require a 4.0 percent gradient of climb in the landing configuration. On the premise that requiring the landing configuration during the climb after a balk is unduly conservative, consideration was given to a proposal to permit showing of compliance with the 4.0 percent gradient of climb in the configuration which would exist 5 seconds after the initiation of the climb. Further study of this proposal indicated that such a rule would tend to introduce complications in design and lead to

less favorable operating procedures which ultimately would not contribute to safety. One of the most important factors in connection with this configuration is the response of the engines to throttle movement. Therefore, there is a provision which requires that the power used in showing compliance with the climb gradient be that power or thrust attained 8 seconds after initiation of movement of the power controls to the take-off position from the minimum flight idle position. In addition, for consistency with the procedures used for determining the landing distance, the speed limitation of 1.4 V_s is reduced to 1.3 V_s. Concern has been indicated to the effect that any reduction in the prescribed gradient of 4.0 percent might not insure in all cases the ability of the airplane to continue a safe climb after a balk. To provide a further safeguard, the take-off weight-altitude-temperature limitations (WAT limitations stemming from the application of the one-engine-inoperative take-off climb requirements) are being made applicable to the maximum landing weight at the airport of landing. In the past, the landing weight limitations were applicable to the airport of destination but not to the weather alternates. This regulation makes both the take-off weight and landing weight limitations equally applicable to the airport of destination and the weather alternates. In view of the aforementioned changes, a reduction of the required climb gradient from 4.0 to 3.2 percent is justified and included in this regulation.

In addition to the substantive changes which have been discussed, there are three significant changes of a clarifying nature. The first deals with the determination of the landing distance as affected by devices or means other than wheel brakes. There is included a provision similar to the one applicable to the accelerate-stop distance for application to the landing distance. This provision permits the use of means other than wheel brakes in the determination of the landing distance. Additionally, there is a change to the provision which requires in some cases the determination of the landing distance with one engine inoperative. It is believed that the new requirement expresses the intent more clearly. One of the more obvious applications of this provision is in respect of turbopropeller airplanes. Such airplanes usually are landed with the propellers in a relatively high drag position. If one of the engines becomes inoperative, its propeller would be expected to be in a relativly low drag position with the consequence of a longer landing distance than with all engines operating. In such a case it is required that the landing distance be determined with one engine inoperative unless use could be made by the crew of other means (e.g., reverse thrust not otherwise considered in determining the landing distance) which would reduce the landing distance at least to that determined for all-engine operation.

The second clarification being included deals with the provision setting forth the procedures which must be included in the Airplane Flight Manual. This provision in SR–422 does not make clear what procedures are involved and whether the procedures are considered to be limitations on the operation of the airplane. The clarification in language specifies that the procedures which are included with the performance limitations shall be considered only as guidance material.

The third clarification concerns the applicability of the performance limitations prescribed in SR=422. These consist of the "certificate limita-

tions" and the "operating limitations." The former relate to maximum take-off and landing weights, minimum take-off distances, accelerate-stop distances, and the operational limits imposed upon the airplane. These limitations, being part of the conditions of the type and airworthiness certificates, must be complied with at all times irrespective of the type of operation being conducted (e.g., air carrier, private, cargo). The "operating limitations," distinct from the "certificate limitations," are only applicable when required by the operating parts of the regulations (Parts 40, 41, and 42 require compliance for passenger operations). Although it appeared that previous Board pronouncements regarding this general principle as well as the explanation contained in the preamble to SR–422 would make the issue quite clear, it has come to the Board's attention that there is still some misunderstanding of this matter. Apparently this misunderstanding stems from the fact that SR–422 prescribes operating rules for air carrier operations which contain both the "certificate limitations" and the "operating limitations" while no prescription is given to non-air-carrier operations; thus giving an impression that not even the "certificate limitations" are applicable to non-air-carriers. The inclusion of "certificate limitations" for air carrier operations with the "operating limitations" was meant only to provide the operators with the convenience of having together the complete prescription of the applicable performance limitations, notwithstanding that such an inclusion, in fact, duplicates the general requirement of compliance with the "certificate limitations" contained in the Airplane Flight Manual. In view of the possible misunderstanding which might exist from the aforementioned inclusion, there are included in this regulation the same "certificate limitations" for application to all operations under the provisions of Part 43 of the Civil Air Regulations.

In addition, other changes of a minor nature are included herein, the most significant of which is the generalization of the stall speed V_s, eliminating reference to V_{s_0} and V_{s_1}.

Of the changes to SR–422 made in this regulation, there are a number which might require further consideration as studies continue and as additional experience is gained with the application of these new rules. Several of these involve new concepts with which U.S. operators have had little or no experience. These entail the requirements relative to unbalanced field lengths with respect to clearways, to the rotational speed, and to the all-engine take-off distance. Strong representation has been made to the Board to the effect that the numerical factors applicable to the aforementioned rules are too high and should be reduced pending further experience. The Board considers that it would not be in the public interest to reduce any of these factors until such time as further experience indicates that they are in fact overly conservative. Realizing, however, that these issues are of considerable importance in prescribing a practicable level of performance, the Board stands ready to reconsider the relevant provisions of this regulation at such time as substantiating information is received.

There are areas other than those previously mentioned where additional refinement of details may be advisable. This is so particularly in the case of the requirements pertaining to the landing stage of flight, to the take-off lateral clearances, and to the two-engine-inoperative en route

gradient margin. It is anticipated that, after further study of the regulation and especially after its application in the design, certification, and operation of forthcoming turbine-powered airplanes, the desirability of changes may become more apparent. It is the intent of the Board to consider without delay such changes as might be found necessary. Only after the provisions of this Special Civil Air Regulation are reasonably verified by practical application will the Board consider incorporating them on a more permanent basis into Parts 4b, 40, 41, 42, and 43 of the Civil Air Regulations.

This Special Civil Air Regulation is not intended to compromise the authority of the Administrator under section 4b.10 to impose such special conditions as he finds necessary in any particular case to avoid unsafe design features and otherwise to insure equivalent safety.

Interested persons have been afforded an opportunity to participate in the making of this regulation (23 F.R. 2139), and due consideration has been given to all relevant matter presented.

In consideration of the foregoing, the Civil Aeronautics Board hereby makes and promulgates the following Special Civil Air Regulation, effective July 2, 1958:

Contrary provisions of the Civil Air Regulations notwithstanding, all turbine-powered transport category airplanes for which a type certificate is issued after August 27, 1957, shall comply with Special Civil Air Regulation No. SR–422 or, alternatively, with the following provisions, except that those airplanes for which a type certificate is issued after September 30, 1958, shall comply with the following provisions:

1. The provisions of Part 4b of the Civil Air Regulations, effective on the date of application for type certificate; and such of the provisions of all subsequent amendments to Part 4b, in effect prior to August 27, 1957, as the Administrator finds necessary to insure that the level of safety of turbine-powered airplanes is equivalent to that generally intended by Part 4b.

2. In lieu of sections 4b.110 through 4b.125, and 4b.743 of Part 4b of the Civil Air Regulations, the following shall be applicable:

PERFORMANCE

4T.110 *General.*

(a) The performance of the airplane shall be determined and scheduled in accordance with, and shall meet the minima prescribed by, the provisions of sections 4T.110 through 4T.123. The performance limitations, information, and other data shall be given in accordance with section 4T.743.

(b) Unless otherwise specifically prescribed, the performance shall correspond with ambient atmospheric conditions and still air. Humidity shall be accounted for as specified in paragraph (c) of this section.

(c) The performance as affected by engine power and/or thrust shall be based on a relative humidity of 80 percent at and below standard temperatures and on 34 percent at and above standard temperatures plus 50° F. Between these two temperatures the relative humidity shall vary linearly.

(d) The performance shall correspond with the propulsive thrust available under the particular ambient atmospheric conditions, the particular flight condition, and the relative humidity specified in paragraph (c) of this section. The available propulsive thrust shall correspond with engine power and/or thrust not exceeding the approved power and/or thrust less the installational losses and less the power and/or equivalent thrust absorbed by the accessories and services appropriate to the particular ambient atmospheric conditions and the particular flight condition.

4T.111 *Airplane configuration, speed, power, and/or thrust; general.*

(a) The airplane configuration (setting of wing and cowl flaps, air brakes, landing gear, propeller, etc.), denoted respectively as the take-off, en route, approach, and landing configurations, shall be selected by the applicant except as otherwise prescribed.

(b) It shall be acceptable to make the airplane configurations variable with weight, altitude, and temperature, to an extent found by the Administrator to be compatible with operating procedures required in accordance with paragraph (c) of this section.

(c) In determining the accelerate-stop distances, take-off flight paths, take-off distances, and landing distances, changes in the airplane's configuration and speed, and in the power and/or thrust shall be in accordance with procedures established by the applicant for the operation of the airplane in service, except as otherwise prescribed. In addition, procedures shall be established for the execution of balked landings and missed approaches associated with the conditions prescribed in sections 4T.119 and 4T.120(d), respectively. All procedures shall comply with the provisions of subparagraphs (1) through (3) of this paragraph.

(1) The Administrator shall find that the procedures can be consistently executed in service by crews of average skill.

(2) The procedures shall not involve methods or the use of devices which have not been proven to be safe and reliable.

(3) Allowance shall be made for such time delays in the execution of the procedures as may be reasonably expected to occur during service.

4T.112 *Stalling speeds.*

(a) The speed V_s shall denote the calibrated stalling speed, or the minimum steady flight speed at which the airplane is controllable, in knots, with:

(1) Zero thrust at the stalling speed, or engines idling and throttles closed if it is shown that the resultant thrust has no appreciable effect on the stalling speed;

(2) If applicable, propeller pitch controls in the position necessary for compliance with subparagraph (1) of this paragraph; the airplane in all other respects (flaps, landing gear, etc.) in the particular configuration corresponding with that in connection with which V_s is being used;

(3) The weight of the airplane equal to the weight in connection with which V_s is being used to determine compliance with a particular requirement;

(4) The center of gravity in the most unfavorable position within the allowable range.

(b) The stall speed defined in this section shall be the minimum speed obtained in flight tests conducted in accordance with the procedure of subparagraphs (1) and (2) of this paragraph.

(1) With the airplane trimmed for straight flight at a speed of 1.4 V_s and from a speed sufficiently above the stalling speed to insure steady conditions, the elevator control shall be applied at a rate such that the airplane speed reduction does not exceed one knot per second.

(2) During the test prescribed in subparagraph (1) of this paragraph, the flight characteristics provisions of section 4b.160 of Part 4b of the Civil Air Regulations shall be complied with.

4T.113 *Take-off; general.*

(a) The take-off data in sections 4T.114 through 4T.117 shall be determined under the conditions of subparagraphs (1) and (2) of this paragraph.

(1) At all weights, altitudes, and ambient temperatures within the operational limits established by the applicant for the airplane.

(2) In the configuration for take-off (see sec. 4T.111).

(b) Take-off data shall be based on a smooth, dry, hard-surfaced runway and shall be determined in such a manner that reproduction of the performance does not require exceptional skill or alertness on the part of the pilot. In the case of seaplanes or float planes, the take-off surface shall be smooth water, while for skiplane it shall be smooth dry snow. In addition, the take-off data shall be corrected in accordance with subparagraphs (1) and (2) of this paragraph for wind and for runway gradients within the operational limits established by the applicant for the airplane.

(1) Not more than 50 percent of nominal wind components along the take-off path opposite to the direction of take-off, and not less than 150 percent of nominal wind components along the take-off path in the direction of take-off.

(2) Effective runway gradients.

4T.114 *Take-off speeds.*

(a) The critical-engine-failure speed V_1, in terms of calibrated air speed, shall be selected by the applicant, but shall not be less than the minimum speed at which controllability by primary aerodynamic controls alone is demonstrated during the take-off run to be adequate to permit proceeding safely with the take-off using average piloting skill, when the critical engine is suddenly made inoperative.

(b) The take-off safety speed V_2, in terms of calibrated air speed, shall be selected by the applicant so as to permit the gradient of climb required in section 4T.120 (a) and (b), but it shall not be less than:

(1) 1.2 V_s for two-engine propeller-driven airplanes and for airplanes without propellers which have no provisions for obtaining a significant reduction in the one-engine-inoperative power-on stalling speed;

(2) 1.15 V_s for propeller-driven airplanes having more than two engines and for airplanes without propellers which have provisions for obtaining a significant reduction in the one-engine-inoperatve power-on stalling speed;

(3) 1.10 times the minimum control speed V_{MC}, established in accordance with section 4b.133 of Part 4b of the Civil Air Regulations;

(4) The rotation speed V_R plus the increment in speed attained in compliance with section 4T.116(e).

(c) The minimum rotation speed V_R, in terms of calibrated air speed, shall be selected by the applicant, except that it shall not be less than:

(1) The speed V_1;

(2) A speed equal to 95 percent of the highest speed obtained in compliance with subparagraph (1) or (2), whichever is applicable, and with subparagraph (3) of paragraph (b) of this section;

(3) A speed which permits the attainment of the Speed V_2 prior to reaching a height of 35 feet above the take-off surface as determined in accordance with section 4T.116(e);

(4) A speed equal to 110 percent of the minimum speed above which the airplane, with all engines operating, can be made to lift off the ground and to continue the take-off without displaying any hazardous characteristics.

4T.115 *Accelerate-stop distance.*

(a) The accelerate-stop distance shall be the sum of the following:

(1) The distance required to accelerate the airplane from a standing start to the speed V_1;

(2) Assuming the critical engine to fail at the speed V_1, the distance required to bring the airplane to a full stop from the point corresponding with the speed V_1.

(b) In addition to, or in lieu of, wheel brakes, the use of other braking means shall be acceptable in determining the accelerate-stop distance, provided that such braking means shall have been proven to be safe and reliable, that the manner of their employment is such that consistent results can be expected in service, and that exceptional skill is not required to control the airplane.

(c) The landing gear shall remain extended throughout the accelerate-stop distance.

4T.116 *Take-off path.* The take-off path shall be considered to extend from the standing start to a point in the take-off where a height of 1,500 feet above the take-off surface is reached or to a point in the take-off where the transition from the take-off to the en route configuration is completed and a speed is reached at which compliance with section 4T.120(c) is shown, whichever point is at a higher altitude. The conditions of paragraphs (a) through (i) of this section shall apply in determining the take-off path.

(a) The take-off path shall be based upon procedures prescribed in accordance with section 4T.111(c).

(b) The airplane shall be accelerated on the ground to the speed V_1 at which point the critical engine shall be made inoperative and shall remain inoperative during the remainder of the take-off. Subsequent to attaining speed V_1, the airplane shall be accelerated to speed V_2 during which time it shall be permissible to initiate raising the nose gear off the ground at a speed not less than the rotation speed V_R.

(c) Landing gear retraction shall not be initiated until the airplane becomes airborne.

(d) The slope of the airborne portion of the take-off path shall be positive at all points.

(e) The airplane shall attain the speed V_2 prior to reaching a height of 35 feet above the take-off surface and shall continue at a speed as close as practical to, but not less than, V_2 until a height of 400 feet above the take-off surface is reached.

(f) Except for gear retraction and propeller feathering, the airplane configuration shall not be changed before reaching a height of 400 feet above the take-off surface.

(g) At all points along the take-off path starting at the point where the airplane first reaches a height of 400 feet above the take-off surface, the available gradient of climb shall not be less than 1.2 percent for two-engine airplanes and 1.7 percent for four-engine airplanes.

(h) The take-off path shall be determined either by a continuous demonstrated take-off, or alternatively, by synthesizing from segments the complete take-off path.

(i) If the take-off path is determined by the segmental method, the provisions of subparagraphs (1) through (4) of this paragraph shall be specifically applicable.

(1) The segments of a segmental take-off path shall be clearly defined and shall be related to the distinct changes in the configuration of the airplane, in power and/or thrust, and in speed.

(2) The weight of the airplane, the configuration, and the power and/or thrust shall be constant throughout each segment and shall correspond with the most critical condition prevailing in the particular segment.

(3) The segmental flight path shall be based on the airplane's performance without ground effect.

(4) Segmental take-off path data shall be checked by continuous demonstrated take-offs to insure that the segmental path is conservative relative to the continuous path.

4T.117 *Take-off distance and take-off run.*

(a) *Take-off distance.* The take-off distance shall be the greater of the distances established in accordance with subparagraphs (1) and (2) of this paragraph.

(1) The horizontal distance along the take-off path from the start of the take-off to the point where the airplane attains a height of 35 feet above the take-off surface, as determined in accordance with section 4T.116.

(2) A distance equal to 115 percent of the horizontal distance along the take-off path, with all engines operating, from the start of the take-off to the point where the airplane attains a height of 35 feet above the take-off surface, as determined by a procedure consistent with that established in accordance with section 4T.116.

(b) *Take-off run.* If the take-off distance is intended to include a clearway (see item 5 of this regulation), the take-off run shall be determined and shall be the greater of the distances established in accordance with subparagraphs (1) and (2) of this paragraph.

(1) The horizontal distance along the take-off path from the start of the take-off to a point equidistant between the point where the airplane first becomes airborne and the point where it attains a height of 35 feet above the take-off surface, as determined in accordance with section 4T.116.

(2) A distance equal to 115 percent of the horizontal distance along the take-off path, with all engines operating, from the start of the take-off to a point equidistant between the point where the airplane first becomes airborne and the point where it attains a height of 35 feet above the take-off surface, as determined by a procedure consistent with that established in accordance with section 4T.116.

4T.117a *Take-off flight path.*

(a) The take-off flight path shall be considered to begin at a height of 35 feet above the take-off surface at the end of the take-off distance as determined in accordance with section 4T.117(a).

(b) The net take-off flight path data shall be determined in such a manner that they represent the airplane's actual take-off flight paths, determined in accordance with paragraph (a) of this section, diminished by a gradient of climb equal to 1.0 percent.

4T.118 *Climb; general.* Compliance shall be shown with the climb requirements of sections 4T.119 and 4T.120 at all weights, altitudes, and ambient temperatures, within the operational limits established by the applicant for the airplane. The airplane's center of gravity shall be in the most unfavorable position corresponding with the applicable configuration.

4T.119 *All-engine-operating landing climb.* In the landing configuration the steady gradient of climb shall not be less than 3.2 percent, with:

(a) All engines operating at the power and/or thrust which is available 8 seconds after initiation of movement of the power and/or thrust controls from the minimum flight idle to the take-off position;

(b) A climb speed not in excess of 1.3 V_s.

4T.120 *One-engine-inoperative climb.*

(a) *Take-off; landing gear extended.* In the take-off configuration existing at the point of the flight path where the airplane first becomes airborne, in accordance with section 4T.116 but without ground effect, the steady gradient of climb shall be positive for two-engine airplanes and shall not be less than 0.5 percent for four-engine airplanes, with:

(1) The critical engine inoperative, the remaining engine(s) operating at the available take-off power and/or thrust existing in accordance with section 4T.116 at the time retraction of the airplane's landing gear is initiated, unless subsequently a more critical power operating condition exists along the flight path prior to the point where the landing gear is fully retracted;

(2) The weight equal to the airplane's weight existing in accordance with section 4T.116 at the time retraction of the airplane's landing gear is initiated;

(3) The speed equal to the speed V_2.

(b) *Take-off; landing gear retracted.* In the take-off configuration existing at the point of the flight path where the airplane's landing gear is fully retracted, in accordance with section 4T.116 but without ground effect, the steady gradient of climb shall not be less than 2.5 percent for two-engine airplanes and not less than 3.0 percent for four-engine airplanes, with:

(1) The critical engine inoperative, the remaining engine(s) operating at the available take-off power and/or thrust existing in accordance with section 4T.116 at the time the landing gear is fully retracted, unless subsequently a more critical power operating condition exists along the flight path prior to the point where a height of 400 feet above the take-off surface is reached;

(2) The weight equal to the airplane's weight existing in accordance with section 4T.116 at the time the airplane's landing gear is fully retracted;

(3) The speed equal to the speed V_2.

(c) *Final take-off.* In the en route configuration, the steady gradient of climb shall not be less than 1.2 percent for two-engine airplanes and not less than 1.7 percent for four-engine airplanes, at the end of the take-off path as determined by section 4T.116, with:

(1) The critical engine inoperative, the remaining engine(s) operating at the available maximum continuous power and/or thrust;

(2) The weight equal to the airplane's weight existing in accordance with section 4T.116 at the end of the take-off path;

(3) The speed equal to not less than 1.25 V_s.

(d) *Approach.* In the approach configuration such that the corresponding V_s for this configuration does not exceed 110 percent of the V_s corresponding with the related landing configuration, the steady gradient of climb shall not be less than 2.2 percent for two-engine airplanes and not less than 2.7 percent for four-engine airplanes with:

(1) The critical engine inoperative, the remaining engine(s) operating at the available take-off power and/or thrust;

(2) The weight equal to the maximum landing weight;

(3) A climb speed established by the applicant in connection with normal landing procedures, except that it shall not exceed 1.5 V_s (see sec. 4T.111(c)).

4T.121 *En route flight paths.* With the airplane in the en route configuration, the flight paths prescribed in paragraphs (a) and (b) of this section shall be determined at all weights, altitudes, and ambient temperatures within the limits established by the applicant for the airplane.

(a) *One engine inoperative.* The one-engine-inoperative net flight path data shall be determined in such a manner that they represent the airplane's actual climb performance diminished by a gradient of climb equal to 1.1 percent for two-engine airplanes and 1.6 percent for four-engine airplanes. It shall be acceptable to include in these data the varia-

tion of the airplane's weight along the flight path to take into account the progressive consumption of fuel and oil by the operating engine(s).

(b) *Two engines inoperative.* For airplanes with four engines, the two-engine-inoperative net flight path data shall be determined in such a manner that they represent the airplane's actual climb performance diminished by a gradient of climb equal to 0.5 percent. It shall be acceptable to include in these data the variation of the airplane's weight along the flight path to take into account the progressive consumption of fuel and oil by the operating engines.

(c) *Conditions.* In determining the flight paths prescribed in paragraphs (a) and (b) of this section, the conditions of subparagraphs (1) through (4) of this paragraph shall apply.

(1) The airplane's center of gravity shall be in the most unfavorable position.

(2) The critical engine(s) shall be inoperative, the remaining engine(s) operating at the available maximum continuous power and/or thrust.

(3) Means for controlling the engine cooling air supply shall be in the position which provides adequate cooling in the hot-day condition.

(4) The speed shall be selected by the applicant.

4T.122 *Landing distance.* The landing distance shall be the horizontal distance required to land and to come to a complete stop (to a speed of approximately 3 knots in the case of seaplanes or float planes) from a point at a height of 50 feet above the landing surface. Landing distances shall be determined for standard temperatures at all weights, altitudes, and winds within the operational limits established by the applicant for the airplane. The conditions of paragraphs (a) through (g) of this section shall apply.

(a) The airplane shall be in the landing configuration. During the landing, changes in the airplane's configuration, in power and/or thrust, and in speed shall be in accordance with procedures established by the applicant for the operation of the airplane in service. The procedures shall comply with the provisions of section 4T.111(c).

(b) The landing shall be preceded by a steady gliding approach down to the 50-foot height with a calibrated air speed of not less than 1.3 V_s.

(c) The landing distance shall be based on a smooth, dry, hard-surfaced runway, and shall be determined in such a manner that reproduction does not require exceptional skill or alertness on the part of the pilot. In the case of seaplanes or float planes, the landing surface shall be smooth water, while for skiplanes it shall be smooth dry snow. During landing, the airplane shall not exhibit excessive vertical acceleration, a tendency to bounce, nose over, ground loop, porpoise, or water loop.

(d) The landing distance shall be corrected for not more than 50 percent of nominal wind components along the landing path opposite to the direction of landing and not less than 150 percent of nominal wind components along the landing path in the direction of landing.

(e) During landing, the operating pressures on the wheel brak-

ing system shall not be in excess of those approved by the manufacturer of the brakes, and the wheel brakes shall not be used in such a manner as to produce excessive wear of brakes and tires.

(f) In addition to, or in lieu of, wheel brakes, the use of other braking means shall be acceptable in determining the landing distance, provided such braking means shall have been proven to be safe and reliable, that the manner of their employment is such that consistent results can be expected in service, and that exceptional skill is not required to control the airplane.

(g) If the characteristics of a device (e.g., the propellers) dependent upon the operation of any of the engines noticeably increase the landing distance when the landing is made with the engine inoperative, the landing distance shall be determined with the critical engine inoperative unless the Administrator finds that the use of compensating means will result in a landing distance not greater than that attained with all engines operating.

4T.123 *Limitations and information.*

(a) *Limitations.* The performance limitations on the operation of the airplane shall be established in accordance with subparagraphs (1) through (4) of this paragraph. (See also sec. 4T.743.)

(1) *Take-off weights.* The maximum take-off weights shall be established at which compliance is shown with the generally applicable provisions of this regulation and with the take-off climb provisions prescribed in section 4T.120 (a), (b), and (c) for altitudes and ambient temperatures within the operational limits of the airplane (see subparagraph (4) of this paragraph).

(2) *Landing weights.* The maximum landing weights shall be established at which compliance is shown with the generally applicable provisions of this regulation and with the landing and take-off climb provisions prescribed in sections 4T.119 and 4T.120 for altitudes and ambient temperatures within the operational limits of the airplane (see subparagraph (4) of this paragraph).

(3) *Accelerate-stop distance, take-off distance, and take-off run.* The minimum distances required for take-off shall be established at which compliance is shown with the generally applicable provisions of this regulation and with sections 4T.115 and 4T.117(a), and with 4T.117(b) if the take-off distance is intended to include a clearway, for weights, altitudes, temperatures, wind components, and runway gradients, within the operational limits of the airplane (see subparagraph (4) of this paragraph).

(4) *Operational limits.* The operational limits of the airplane shall be established by the applicant for all variable factors required in showing compliance with this regulation (weight, altitude, temperature, etc.). (See secs. 4T.113 (a)(1) and (b), 4T.118, 4T.121, and 4T.122.)

(b) *Information.* The performance information on the operation of the airplane shall be scheduled in compliance with the generally applicable provisions of this regulation and with sections 4T.117a(b), 4T.121, and 4T.122 for weights, altitudes, temperatures, wind components, and runway gradients, as these may be applicable, within the operational limits of the airplane (see subparagraph (a)(4) of this section). In addition, the

542115 O—60——20

performance information specified in subparagraphs (1) through (3) of this paragraph shall be determined by extrapolation and scheduled for the ranges of weights between the maximum landing and maximum take-off weights established in accordance with subparagraphs (a)(1) and (a)(2) of this section. (See also sec. 4T.743.)

(1) Climb in the landing configuration (see sec. 4T.119);

(2) Climb in the approach configuration (see sec. 4T.120(d));

(3) Landing distance (see sec. 4T.122).

AIRPLANE FLIGHT MANUAL

4T.743 *Performance limitations, information, and other data.*

(a) *Limitations.* The airplane's performance limitations shall be given in accordance with section 4T.123(a).

(b) *Information.* The performance information prescribed in section 4T.123(b) for the application of the operating rules of this regulation shall be given together with descriptions of the conditions, air speeds, etc., under which the data were determined.

(c) *Procedures.* Procedures established in accordance with section 4T.111(c) shall be given to the extent such procedures are related to the limitations and information set forth in accordance with paragraphs (a) and (b) of this section. Such procedures, in the form of guidance material, shall be included with the relevant limitations or information, as applicable.

(d) *Miscellaneous.* An explanation shall be given of significant or unusual flight or ground handling characteristics of the airplane.

3. In lieu of sections 40.70 through 40.78, 41.27 through 41.36(d), and 42.70 through 42.83, of Parts 40, 41, and 42 of the Civil Air Regulations, respectively, the following shall be applicable:

OPERATING RULES

40T.80 *Transport category airplane operating limitations.*

(a) In operating any passenger-carrying transport category airplane certificated in accordance with the performance requirements of this regulation, the provisions of sections 40T.80 through 40T.84 shall be complied with, unless deviations therefrom are specifically authorized by the Administrator on the ground that the special circumstances of a particular case make a literal observance of the requirements unnecessary for safety.

(b) The performance data in the Airplane Flight Manual shall be applied in determining compliance with the provisions of sections 40T.81 through 40T.84. Where conditions differ from those for which specific tests were made, compliance shall be determined by approved interpolation or computation of the effects of changes in the specific variables if such interpolations or computations give results substantially equalling in accuracy the results of a direct test.

40T.81 *Airplane's certificate limitations.*

(a) No airplane shall be taken off at a weight which exceeds the take-off weight specified in the Airplane Flight Manual for the elevation of the airport and for the ambient temperature existing at the time of the take-off. (See secs. 4T.123(a)(1) and 4T.743(a).)

(b) No airplane shall be taken off at a weight such that, allowing for normal consumption of fuel and oil in flight to the airport of destination and to the alternate airports, the weight on arrival will exceed the landing weight specified in the Airplane Flight Manual for the elevation of each of the airports involved and for the ambient temperatures anticipated at the time of landing. (See secs. 4T.123(a)(2) and 4T.743(a).

(c) No airplane shall be taken off at a weight which exceeds the weight shown in the Airplane Flight Manual to correspond with the minimum distances required for take-off. These distances shall correspond with the elevation of the airport, the runway to be used, the effective runway gradient, and the ambient temperature and wind component existing at the time of take-off. (See secs. 4T.123(a)(3) and 4T.743(a).) If the take-off distance includes a clearway as defined in Item 5 of this regulation, the take-off distance shall not include a clearway distance greater than one-half of the take-off run.

(d) No airplane shall be operated outside the operational limits specified in the Airplane Flight Manual. (See secs. 4T.123(a)(4) and 42.743(a).)

40T.82 *Take-off obstacle clearance limitations.* No airplane shall be taken off at a weight in excess of that shown in the Airplane Flight Manual to correspond with a net take-off flight path which clears all obstacles either by at least a height of 35 feet vertically or by at least 200 feet horizontally within the airport boundaries and by at least 300 feet horizontally after passing beyond the boundaries. In determining the allowable deviation of the flight path in order to avoid obstacles by at least the distances prescribed, it shall be assumed that the airplane is not banked before reaching a height of 50 feet as shown by the take-off path data in the Airplane Flight Manual, and that a maximum bank thereafter does not exceed 15 degrees. The take-off path considered shall be for the elevation of the airport, the effective runway gradient, and for the ambient temperature and wind component existing at the time of take-off. (See secs. 4T.123(b) and 4T.743(b).)

40T.83 *En route limitations.*

(a) *One engine inoperative.* No airplane shall be taken off at a weight in excess of that which, according to the one-engine-inoperative en route net flight path data shown in the Airplane Flight Manual, will permit compliance with either subparagraph (1) or subparagraph (2) of this paragraph at all points along the route. The net flight path used shall be for the ambient temperatures anticipated along the route. (See secs. 4T.123(b) and 4T.743(b).)

(1) The slope of the net flight path shall be positive at an altitude of at least 1,000 feet above all terrain and obstructions along the route within 5 miles on either side of the intended track.

(2) The net flight path shall be such as to permit the airplane to continue flight from the cruising altitude to an alternate airport where a landing can be made in accordance with the provisions of section 40T.84(b), the net flight path clearing vertically by at least 2,000 feet all terrain and obstructions along the route within 5 miles on either side of the intended track. The provisions of subdivisions (i) through (vii) of this subparagraph shall apply.

(i) The engine shall be assumed to fail at the most critical point along the route.

(ii) The airplane shall be assumed to pass over the critical obstruction following engine failure at a point no closer to the critical obstruction than the nearest approved radio navigational fix, except that the Administrator may authorize a procedure established on a different basis where adequate operational safeguards are found to exist.

(iii) The net flight path shall have a positive slope at 1,500 feet above the airport used as the alternate.

(iv) An approved method shall be used to account for winds which would otherwise adversely affect the flight path.

(v) Fuel jettisoning shall be permitted if the Administrator finds that the operator has an adequate training program, proper instructions are given to the flight crew, and all other precautions are taken to insure a safe procedure.

(vi) The alternate airport shall be specified in the dispatch release and shall meet the prescribed weather minima.

(vii) The consumption of fuel and oil after the engine becomes inoperative shall be that which is accounted for in the net flight path data shown in the Airplane Flight Manual.

(b) *Two engines inoperative.* No airplane shall be flown along an intended route except in compliance with either subparagraph (1) or subparagraph (2) of this paragraph.

(1) No place along the intended track shall be more than 90 minutes away from an airport at which a landing can be made in accordance with the provisions of section 40T.84(b), assuming all engines to be operating at cruising power.

(2) No airplane shall be taken off at a weight in excess of that which, according to the two-engine-inoperative en route net flight path data shown in the Airplane Flight Manual, will permit the airplane to continue flight from the point where two engines are assumed to fail simultaneously to an airport where a landing can be made in accordance with the provisions of section 40T.84(b), the net flight path having a positive slope at an altitude of at least 1,000 feet above all terrain and obstructions along the route within 5 miles on either side of the intended track or at an altitude of 2,000 feet, whichever is higher. The net flight path considered shall be for the ambient temperatures anticipated along the route. The provisions of subdivisions (i) through (iii) of this subparagraph shall apply. (See secs. 4T.123(b) and 4T.743(b).)

(i) The two engines shall be assumed to fail at the most critical point along the route.

(ii) The airplane's weight at the point where the two engines are assumed to fail shall be considered to be not less than that which would include sufficient fuel to proceed to the airport and to arrive there at an altitude of at least 1,500 feet directly over the landing area and thereafter to fly for 15 minutes at cruise power and/or thrust.

(iii) The consumption of fuel and oil after the engines become inoperative shall be that which is accounted for in the net flight path data shown in the Airplane Flight Manual.

40T.84 *Landing limitations.*

(a) *Airport of destination.* No airplane shall be taken off at a weight in excess of that which, in accordance with the landing distances shown in the Airplane Flight Manual for the elevation of the airport of intended destination and for the wind conditions anticipated there at the time of landing, would permit the airplane to be brought to rest at the airport of intended destination within 60 percent of the effective length of the runway from a point 50 feet directly above the intersection of the obstruction clearance plane and the runway. The weight of the airplane shall be assumed to be reduced by the weight of the fuel and oil expected to be consumed in flight to the airport of intended destination. Compliance shall be shown with the conditions of subparagraphs (1) and (2) of this paragraph. (See secs. 4T.123(b) and 4T.743(b).)

(1) It shall be assumed that the airplane is landed on the most favorable runway and direction in still air.

(2) It shall be assumed that the airplane is landed on the most suitable runway considering the probable wind velocity and direction and taking due account of the ground handling characteristics of the airplane and of other conditions (i.e., landing aids, terrain, etc.). If full compliance with the provisions of this subparagraph is not shown, the airplane may be taken off if an alternate airport is designated which permits compliance with paragraph (b) of this section.

(b) *Alternate airport.* No airport shall be designated as an alternate airport in a dispatch release unless the airplane at the weight anticipated at the time of arrival at such airport can comply with the provisions of paragraph (a) of this section, provided that the airplane can be brought to rest within 70 percent of the effective length of the runway.

4. In lieu of section 43.11 of Part 43 of the Civil Air Regulations, the following shall be applicable:

43T.11 *Transport category airplane weight limitations.* The performance data in the Airplane Flight Manual shall be applied in determining compliance with the following provisions:

(a) No airplane shall be taken off at a weight which exceeds the take-off weight specified in the Airplane Flight Manual for the elevation of the airport and for the ambient temperature existing at the time of the take-off. (See secs. 4T.123(a)(1) and 4T.743(a).)

(b) No airplane shall be taken off at a weight such that, allowing for normal consumption of fuel and oil in flight to the airport of destination and to the alternate airports, the weight on arrival will exceed the landing weight specified in the Airplane Flight Manual for the elevation of each of the airports involved and for the ambient temperatures anticipated at the time of landing. (See secs. 4T.123(a)(2) and 4T.743(a).)

(c) No airplane shall be taken off at a weight which exceeds the weight shown in the Airplane Flight Manual to correspond with the minimum distances required for take-off. These distances shall correspond with the elevation of the airport, the runway to be used, the effective runway gradient, and the ambient temperature and wind component existing at the time of take-off. (See secs. 4T.123(a)(3) and 4T.743(a).) If the take-off distance includes a clearway as defined in Item 5 of this regulation, the take-off distance shall not include a clearway distance greater than one-half of the take-off run.

(d) No airplane shall be operated outside the operational limits specified in the Airplane Flight Manual. (See secs. 4T.123(a)(4) and 4T.743(a).)

5. The following definitions shall apply:

Clearway. A clearway is an area beyond the airport runway not less than 300 feet on either side of the extended center line of the runway, at an elevation no higher than the elevation at the end of the runway, clear of all fixed obstacles, and under the control of the airport authorities.

SPECIAL CIVIL AIR REGULATION NO. SR–422B

Effective: July 9, 1959
Issued: July 9, 1959

Turbine-Powered Transport Category Airplane of Current Design

Special Civil Air Regulation No. SR–422, effective August 27, 1957, prescribes requirements applicable to the type certification and operation of turbine-powered transport category airplanes for which a type certificate is issued after August 27, 1957. Special Civil Air Regulation No. SR–422A, effective July 2, 1958, included substantive changes to SR–422 and was made applicable to all turbine-powered transport category airplanes for which a type certificate is issued after September 30, 1958.

This Special Civil Air Regulation makes further changes to the airworthiness rules for turbine-powered transport category airplanes to be applicable to all such airplanes for which a type certificate is issued after August 29, 1959. These changes were proposed in Draft Release No. 58–1C (24 F.R. 128) by the Civil Aeronautics Board in connection with the 1958 Annual Airworthiness Review. The amendments herein have been adopted after careful consideration of all the discussion and comment received thereon.

Substantive and minor changes have been made to the provisions of SR–422A. For ease in identification they are listed as follows:

(a) Substantive changes: introductory paragraphs; 4T.114 (b), (c), (d), (e), and (f); 4T.115(d); 4T.117a(b); 4T.120 (a)(3), (b), and (d); 40T.81(c); 43T.11(c); and item 5 (a) and (b).

(b) Minor changes; item 2; 4T.112 (title), (b)(1), (c), (d), and (e); 4T.113(b); 4T.116(i)(4); 4T.117(b) (1) and (2); 4T.120(a); 4T.121; 4T.122(d); 4T.123(a); 40T.82; and 40T.83.

Pertinent background information to this regulation is contained in the preambles to SR–422 and SR–422A. Following is a discussion of important issues relevant to the changed provisions contained herein.

One of the most important changes being introduced concerns the rotation speed V_R of the airplane during takeoff (4T.114). Experience gained in the certification of airplanes under the provisions of SR–422 and SR–422A indicates that relating V_R to the stall speed is not essential and might unduly penalize airplanes with superior flying qualities. It has been found that the primary limitations on V_R should be in terms of a margin between the actual lift-off speeds V_{LOF} and the minimum unstick speed V_{MU} at which the airplane can proceed safely with the takeoff. The provisions contained herein require that V_R speeds be established to be applicable to takeoffs with one engine inoperative as well as with all engines operating. The V_{MU} speeds can be established from free air data provided that the data are verified by ground takeoff tests. Certain safeguards are included in conjunction with the establishment of V_R speeds to ensure that takeoffs in service can be made with consistent safety.

A change is being introduced to the provision in 4T.117a(b) concerning the manner in which the net takeoff flight path is obtained. In accordance with this provision as contained in SR–422A, the net takeoff flight path would have a negative slope throughout the acceleration segment. Since this segment usually represents level flight easily controlled by reference to the normal flight instruments, a significant reduction in the flight path's gradient would not be expected. For these reasons, the provision is being changed to permit an equivalent reduction in acceleration in lieu of a reduction in gradient.

Section 4T.117a(b) is being amended additionally by changing the value of gradient margin in the net flight path for two-engine airplanes from 1.0 percent to 0.8 percent. The value for four-engine airplanes remains 1.0 percent. Differentiation in gradient values in the net flight path between two and four-engine airplanes is consistent with the differentiation in the climb gradients for the takeoff, enroute, and approach stages of flight. Statistical analysis substantiates the specific reduction of the net flight path gradient to a value of 0.8 percent. Correlatively, a reevaluation of the climb gradients for twin-engine airplanes in the second segment takeoff and in the approach climb indicates that the respective values should be 2.4 percent and 2.1 percent and these changes are being made in 4T.120 (b) and (d).

A change is introduced in the conditions prescribed for meeting the climb gradient in the first segment takeoff climb (4T.120(a)), by changing the speed V_2 to the speed V_{LOF}. The intent of this requirement is to use the speed at which the airplane lifts off the ground. In SR–422 this speed was considered to be V_2; however, in SR–422A and in this regulation the speed V_2 is a higher speed which is reached at the end of the takeoff distance and no longer reflects the conditions pertinent to the first segment climb. In making this change consistent with relevant changes in SR–422A and in this regulation, no consideration has been given to the appropriateness of the minimum climb gradient values prescribed for the first segment climb. These are subject to alteration if results of further studies so indicate.

There is being introduced in this regulation the concept of "stopways," the definition of which is contained in item 5(b). Stopways have been used outside the United States in meeting the accelerate-stop distances in case of aborted takeoffs. They are considered to result in more practical operations. In order to ensure that they can be used without detrimental effects on safety, a provision is being included in 4T.115(d) requiring taking into account the surface characteristics of the stopways to be used in scheduling the accelerate-stop distances in the Airplane Flight Manual.

In conjunction with the introduction of stopways, there are changes being made in the definition of a "clearway" (item 5(a)). One of the changes is to specify that a clearway begins at the end of the runway whether or not a stopway is being used. Of the other changes, the most significant one expresses the clearway in terms of a clearway plane and permits this plane to have an upward slope of 1.25 percent. In effect, this change will allow, in some cases, use of clearways which would not be allowed under the definition in SR–422A because of relatively small obstacles or slightly sloping terrain. (See also 40T.81(c) and 43T.11(c).)

There are also included in this regulation a number of minor, editorial, or clarifying changes.

Draft Release No. 58–1C included a proposal for expanding lateral obstacle clearances in the takeoff flight path. Studies indicate that some expanding lateral clearances are necessary for safety in operations with all turbine-powered airplanes. It appears, therefore, that an appropriate rule should be made applicable not only to airplanes certificated in accordance with this regulation, but also to those certificated in accordance with SR–422 and SR–422A. Accordingly, no change is being made in this regulation to the lateral obstacle clearance provisions, instead, a Notice of Proposed Rule Making is now being prepared to amend SR–422, SR–422A, and this regulation, to require expanding lateral obstacle clearances for all airplanes certificated thereunder.

This Special Civil Air Regulation is not intended to compromise the authority of the Administrator under section 4b.10 to impose such special conditions as are found necessary in any particular case to avoid unsafe design features and otherwise to ensure equivalent safety.

Interested persons have been afforded an opportunity to participate in the making of this regulation (24 F.R. 128), and due consideration has been given to all relevant matter presented.

This regulation does not require compliance until after August 29, 1959; however, since applicants for a type certificate for turbine-powered transport category airplanes may elect to show compliance with this regulation before that date, it is being made effective immediately.

In consideration of the foregoing, the following Special Civil Air Regulation is hereby promulgated to become effective immediately:

Contrary provisions of the Civil Air Regulations notwithstanding, all turbine-powered transport category airplanes for which a type certificate is issued after August 29, 1959, shall comply with the following requirements. Applicants for a type certificate for a turbine-powered transport category airplane may elect and are authorized to meet the requirements of this Special Civil Air Regulation prior to August 29, 1959, in which case however, all of the following provisions must be complied with.

1. The provisions of Part 4b of the Civil Air Regulations, effective on the date of application for type certificate; and such of the provisions of all subsequent amendments to Part 4b, in effect prior to August 27, 1957, as the Administator finds necessary to ensure that the level of safety of turbine-powered airplanes is equivalent to that generally intended by Part 4b.

2. In lieu of sections 4b. 110 through 4b.125, 4b.183, and 4b.743 of Part 4b of the Civil Air Regulations, the following shall be applicable:

PERFORMANCE

4T.110 *General.*

(a) The performance of the airplane shall be determined and scheduled in accordance with, and shall meet the minima prescribed by, the provision of sections 4T.110 through 4T.123. The performance limitations, information, and other data shall be given in accordance with section 4T.743.

(b) Unless otherwise specifically prescribed, the performance shall correspond with ambient atmospheric conditions and still air.

Humidity shall be accounted for as specified in paragraph (c) of this section.

(c) The performance as affected by engine power and/or thrust shall be based on a relative humidity of 80 percent at and below standard temperatures and on 34 percent at and above standard temperatures plus 50° F. Between these two temperatures the relative humidity shall vary linearly.

(d) The performance shall correspond with the propulsive thrust available under the particular ambient atmospheric conditions, the particular flight condition, and the relative humidity specified in paragraph (c) of this section. The available propulsive thrust shall correspond with engine power and/or thrust not exceeding the approved power and/or thrust less the installational losses and less the power and/or equivalent thrust absorbed by the accessories and services appropriate to the particular ambient atmospheric conditions and the particular flight condition.

4T.111 *Airplane configuration, speed, power, and/or thrust; general.*

(a) The airplane configuration (setting of wing and cowl flaps, air brakes, landing gear, propeller, etc.), denoted respectively as the takeoff, en route, approach, and landing configurations, shall be selected by the applicant except as otherwise prescribed.

(b) It shall be acceptable to make the airplane configurations variable with weight, altitude, and temperature, to an extent found by the Administrator to be compatible with operating procedures required in accordance with paragraph (c) of this section.

(c) In determining the accelerate-stop distances, takeoff flight paths, takeoff distances, and landing distances, changes in the airplane's configuration and speed, and in the power and/thrust shall be in accordance with procedures established by the applicant for the operation of the airplane in service, except as otherwise prescribed. In addition, procedures shall be established for the execution of balked landings and missed approaches associated with the conditions prescribed in sections 4T.119 and 4T.120(d), respectively. All procedures shall comply with the provisions of subparagraphs (1) through (3) of this paragraph.

(1) The Administrator shall find that the procedures can be consistently executed in service by crews of average skill.

(2) The procedures shall not involve methods or the use of devices which have not been proven to be safe and reliable.

(3) Allowance shall be made for such time delays in the execution of the procedures as may be reasonably expected to occur during service.

4T.112 *Stalling and minimum control speeds.*

(a) The speed V_s shall denote the calibrated stilling speed, or the minimum steady flight speed at which the airplane is controllable, in knots, with:

(1) Zero thrust at the stalling speed, or engines idling and throttles closed if it is shown that the resultant thrust has no appreciable effect on the stalling speed;

(2) If applicable, propeller pitch controls in the position

necessary for compliance with subparagraph (1) of this paragraph; the airplane in all other respects (flaps, landing gear, etc.) in the particular configuration corresponding with that in connection with which V_s is being used;

(3) The weight of the airplane equal to the weight in connection with which V_s is being used to determine compliance with a particular requirement;

(4) The center of gravity in the most unfavorable position within the the allowable range.

(b) The stall speed defined in this section shall be the minimum speed obtained in flight tests conducted in accordance with the procedure of subparagraphs (1) and (2) of this paragraph.

(1) With the airplane trimmed for straight flight at a speed chosen by the applicant, but not less than 1.2 V_s nor greater than 1.4 V_s, and from a speed sufficiently above the stalling speed to ensure steady conditions, the elevator control shall be applied at a rate such that the airplane speed reduction does not exceed 1 knot per second.

(2) During the test prescribed in subparagraph (1) of this paragraph, the flight characteristics provisions of section 4b.160 of Part 4b of the Civil Air Regulations shall be complied with.

(c) The minimum control speed V_{MC}, in terms of calibrated air speeed, shall be determined under the conditions specified in this paragraph so that, when the critical engine is suddenly made inoperative at that speed, it is possible to recover control of the airplane with the engine still inoperative and to maintain it in straight flight at that speed, either with zero yaw or, at the option of the applicant, with an angle of bank not in excess of 5 degrees. V_{MC} shall not exceed 1.2 V_s with:

(1) Engines operating at the maximum available takeoff thrust and/or power;

(2) Maximum sea level takeoff weight or such lesser weight as might be necessary to demonstrate V_{MC}.

(3) The airplane in the most critical takeoff configuration existing along the flight path after the airplane becomes airborne, except that the landing gear is retracted;

(4) The airplane trimmed for takeoff;

(5) The airplane airborne and the ground effect negligible;

(6) The center of gravity in the most unfavorable position;

(d) In demonstrating the minimum speed specified in paragraph (c) of this section, the rudder force required to maintain control shall not exceed 180 pounds and it shall not be necessary to reduce the power and/or thrust of the operative engine(s).

(e) During recovery from the maneuver specified in paragraph (c) of this section, the airplane shall not assume any dangerous attitude, nor shall it require exceptional skill, strength, or alertness on the part of the pilot to prevent a change of heading in excess of 20 degrees before recovery is complete.

4T.113 *Takeoff; general.*

(a) The takeoff data in sections 4T.114 through 4T.117 shall be determined under the conditions of subparagraphs (1) and (2) of this paragraph.

(1) At all weights, altitudes, and ambient temperatures, within the operational limits established by the applicant for the airplane.

(2) In the configuration for takeoff (see sec. 4T.111).

(b) Takeoff data shall be based on a smooth, dry, hard-surfaced runway and shall be determined in such a manner that reproduction of the performance does not require exceptional skill or alertness on the part of the pilot. In the case of seaplanes or float planes, the takeoff surface shall be smooth water, while for skiplane it shall be smooth, dry snow. In addition, the takeoff data shall include operational correction factors in accordance with subparagraphs (1) and (2) of this paragraph for wind and for runway gradients, within the operational limits established by the applicant for the airplane.

(1) Not more than 50 percent of nominal wind components along the takeoff path opposite to the direction of takeoff, and not less than 150 percent of nominal wind components along the takeoff path in the direction of takeoff.

(2) Effective runway gradients.

4T.114 *Takeoff speeds.*

(a) The critical-engine-failure speed V_1 in terms of calibrated air speed, shall be selected by the applicant, but shall not be less than the minimum speed at which controllability by primary aerodynamic controls alone is demonstrated during the takeoff run to be adequate to permit proceeding safely with the takeoff using average piloting skill, when the critical engine is suddenly made inoperative.

(b) The minimum takeoff safety speed $V_{2\,min}$, in terms of calibrated air speed, shall not be less than:

(1) 1.2 V_s for two-engine propeller-driven airplanes and for airplanes without propellers which have no provisions for obtaining a significant reduction in the one-engine-inoperative power-on stalling speed;

(2) 1.15 V_s for propeller-driven airplanes having more than two engines and for airplanes without propellers which have provisions for obtaining a significant reduction in the one-engine-inoperative power-on stalling speed;

(3) 1.10 times the minimum control speed V_{MC}.

(c) The takeoff safety speed V_2, in terms of calibrated air speed, shall be selected by the applicant so as to permit the gradient of climb required in section 4T.120(b), but it shall not be less than:

(1) The speed $V_{2\,min}$,

(2) The rotation speed V_R (see paragraph (e) of this section) plus the increment in speed attained prior to reaching a height of 35 feet above the takeoff surface in compliance with section 4T.116(e).

(d) The minimum unstick speed V_{MU}, in terms of calibrated air speed, shall be the speed at and above which the airplane can be made to lift off the ground and to continue the takeoff without displaying any hazardous characteristics. V_{MU} speeds shall be selected by the applicant for the all-engines-operating and the one-engine-inoperative conditions. It shall be acceptable to establish the V_{MU} speeds from free air data: *Provided*, That these data are verified by ground takeoff tests.

NOTE: In certain cases, ground takeoff tests might involve some takeoffs at the V_{MU} speeds.

(e) The rotation speed V_R, in terms of calibrated air speed, shall be selected by the applicant in compliance with the conditions of subparagraphs (1) through (4) of this paragraph.

(1) The V_R speed shall not be less than:

(i) The speed V_1;

(ii) A speed equal to 105 percent of V_{MC};

(iii) A speed which permits the attainment of the speed V_2 prior to reaching a height of 35 feet above the takeoff surface as determined in accordance with section 4T.116(e);

(iv) A speed which, if the airplane is rotated at its maximum practicable rate, will result in a lift-off speed V_{LOF} (see paragraph (f) of this section) not less than 110 percent of V_{MU} in the all-engines-operating condition nor less than 105 percent of V_{MU} in the one-engine-inoperative condition.

(2) For any given set of conditions (weight, configuration, temperature, etc.), a single value of V_R speed obtained in accordance with this paragraph shall be used in showing compliance with both the one-engine-inoperative and the all-engines-operating takeoff provisions.

(3) It shall be shown that the one-engine-inoperative takeoff distance determined with a rotation speed 5 knots less than the V_R speed established in accordance with subparagraphs (1) and (2) of this paragraph does not exceed the corresponding one-engine-inoperative takeoff distance determined with the established V_R speed. The determination of the takeoff distances shall be in accordance with section 4T.117(a)(1).

(4) It shall be demonstrated that reasonably expected variations in service from the takeoff procedures established by the applicant for the operation of the airplane (see sec. 4T.111(c)) (e.g., over-rotation of the airplane, out of trim conditions) will not result in unsafe flight characteristics nor in marked increases in the scheduled takeoff distances established in accordance with section 4T.117(a).

(f) The lift-off speed V_{LOF}, in terms of calibrated air speed, shall be the speed at which the airplane first becomes airborne.

4T.115 *Accelerate-stop distance.*

(a) The accelerate-stop distance shall be the sum of the following:

(1) The distance required to accelerate the airplane from a standing start to the speed V_1;

(2) Assuming the critical engine to fail at the speed V_1, the distance required to bring the airplane to a full stop from the point corresponding with the speed V_1.

(b) In addition to, or in lieu of, wheel brakes, the use of other braking means shall be acceptable in determining the accelerate-stop distance, provided that such braking means shall have been proven to be safe and reliable, that the manner of their employment is such that consistent results can be expected in service and that exceptional skill is not required to control the airplane.

(c) The landing gear shall remain extended throughout the accelerate-stop distance.

(d) If the accelerate-stop distance is intended to include a stopway with surface characteristics substantially different from those of a

smooth hard-surfaced runway, the takeoff data shall include operational correction factors for the accelerate-stop distance to account for the particular surface characteristics of the stopway and the variations in such characteristics with seasonal weather conditions (i.e., temperature, rain, snow, ice, etc.), within the operational limits established by the applicant.

4T.116 *Takeoff path.* The takeoff path shall be considered to extend from the standing start to a point in the takeoff where a height of 1,500 feet above the takeoff surface is reached or to a point in the takeoff where the transition from the takeoff to the en route configuration is completed and a speed is reached at which compliance with section 4T.120(c) is shown, whichever point is at a higher altitude. The conditions of paragraphs (a) through (i) of this section shall apply in determining the takeoff path.

(a) The takeoff path shall be based upon procedures prescribed in accordance with section 4T.111(c).

(b) The airplane shall be accelerated on the ground to the speed V_1 at which point the critical engine shall be made inoperative and shall remain inoperative during the remainder of the takeoff. Subsequent to attaining speed V_1, the airplane shall be accelerated to speed V_2 during which time it shall be permissible to initiate raising the nose gear off the

(c) Landing gear retraction shall not be initiated until the ground at a speed not less than the rotating speed V_R.
airplane becomes airborne.

(d) The slope of the airborne portion of the takeoff path shall be positive at all points.

(e) The airplane shall attain the speed V_2 prior to reaching a height of 35 feet above the takeoff surface and shall continue at a speed as close as practical to, but not less than, V_2 until a height of 400 feet above the takeoff surface is reached.

(f) Except for gear retraction and propeller feathering, the airplane configuration shall not be changed before reaching a height of 400 feet above the takeoff surface.

(g) At all points along the takeoff path starting at the point where the airplane first reaches a height of 400 feet above the takeoff surface, the available gradient of climb shall not be less than 1.2 percent for two-engine airplanes, and 1.7 percent for four-engine airplanes.

(h) The takeoff path shall be determined either by a continuous demonstrated takeoff, or alternatively, by synthesizing from segments the complete takeoff path.

(i) If the takeoff path is determined by the segmental method, the provisions of subparagraphs (1) through (4) of this paragraph shall be specifically applicable.

(1) The segments of a segmental takeoff path shall be clearly defined and shall be related to the distinct changes in the configuration of the airplane, in power and/or thrust, and in speed.

(2) The weight of the airplane, the configuration, and the power and/or thrust shall be constant throughout each segment and shall correspond with the most critical condition prevailing in the particular segment.

(3) The segmental flight path shall be based on the airplane's performance without ground effect.

(4) Segmental takeoff path data shall be checked by continuous demonstrated takeoffs up to the point where the airplane's performance is out of ground effect and the airplane's speed is stabilized, to ensure that the segmental path is conservative relative to the continuous path.

NOTE: The airplane usually is considered out of ground effect when it reaches a height above the ground equal to the airplane's wing span.

4T.117 *Takeoff distance and takeoff run.*

(a) *Takeoff distance.* The takeoff distance shall be the greater of the distances established in accordance with subparagraphs (1) and (2) of this paragraph.

(1) The horizontal distance along the takeoff path from the start of the takeoff to the point where the airplane attains a height of 35 feet above the takeoff surface, as determined in accordance with section 4T.116.

(2) A distance equal to 115 percent of the horizontal distance along the takeoff path, with all engines operating, from the start of the takeoff to the point where the airplane attains a height of 35 feet above the takeoff surface, as determined by a procedure consistent with that established in accordance with section 4T.116.

(b) *Takeoff run.* If the takeoff distance is intended to include a clearway (see item 5 of this regulation), the takeoff run shall be determined and shall be the greater of the distances established in accordance with subparagraphs (1) and (2) of this paragraph.

(1) The horizontal distance along the takeoff path from the start of the takeoff to a point equidistant between the point where the speed V_{LOF} is reached and the point where the airplane attains a height of 35 feet above the takeoff surface, as determined in accordance with section 4T.116.

(2) A distance equal to 115 percent of the horizontal distance along the takeoff path, with all engines operating, from the start of the takeoff to a point equidistant between the point where the speed V_{LOF} is reached and the point where the airplane attains a height of 35 feet above the takeoff surface, as determined by a procedure consistent with that established in accordance with section 4T.116.

4T.117a *Takeoff flight path.*

(a) The takeoff flight path shall be considered to begin at a height of 35 feet above the takeoff surface at the end of the takeoff distance as determined in accordance with section 4T.117(a).

(b) The net takeoff flight path data shall be determined in such a manner that they represent the airplane's actual takeoff flight paths, determined in accordance with section 4T.116 and with paragraph (a) of this section, reduced at each point by a gradient of climb equal to 0.8 percent for two-engine airplanes and equal to 1.0 percent for four-engine airplanes. It shall be acceptable to apply the prescribed reduction in climb gradient as an equivalent reduction in the airplane's acceleration along that portion of the actual takeoff flight path where the airplane is accelerated in level flight.

4T.118 *Climb; general.* Compliance shall be shown with the climb requirements of sections 4T.119 and 4T.120 at all weights, altitudes, and ambient temperatures, within the operational limits established by the applicant for the airplane. The airplane's center of gravity shall be in the most unfavorable position corresponding with the applicable configuration.

4T.119 *All-engine-operating landing climb.* In the landing configuration the steady gradient of climb shall not be less than 3.2 percent, with:

(a) All engines operating at the power and/or thrust which are available 8 seconds after initiation of movement of the power and/or thrust controls fromthe minimum flight idle to the takeoff position;

(b) A climb speed not in excess of 1.3 V_s.

4T.120 *One-engine-inoperative climb.*

(a) *Takeoff; landing gear extended.* In the critical takeoff configuration existing along the flight path between the points where the airplane reaches the speed V_{LOF} and where the landing gear is fully retracted, in accordance with section 4T.116 but without ground effect, the steady gradient of climb shall be positive for two-engine airplanes and shall not be less than 0.5 percent for four-engine airplanes, with:

(1) The critical engine inoperative, the remaining engine(s) operating at the available takeoff power and/or thrust existing in accordance with section 4T.116 at the time retraction of the airplane's landing gear is initiated, unless subsequently a more critical power operating condition exists along the flight path prior to the point where the landing gear is fully retracted;

(2) The weight equal to the airplane's weight existing in accordance with section 4T.116 at the time retraction of the airplane's landing gear is initiated;

(3) The speed equal to the speed V_{LOF}.

(b) *Takeoff; landing gear retracted.* In the takeoff configuration existing at the point of the flight path where the airplane's landing gear is fully retracted, in accordance with section 4T.116 but without ground effect, the steady gradient of climb shall not be less than 2.4 percent for two-engine airplanes and not less than 3.0 percent for four-engine airplanes, with:

(1) The critical engine inoperative, the remaining engine(s) operating at the available takeoff power and/or thrust existing in accordance with section 4T.116 at the time the landing gear is fully retracted, unless subsequently a more critical power operating condition exists along the flight path prior to the point where a height of 400 feet above the takeoff surface is reached;

(2) The weight equal to the airplane's weight existing in accordance with section 4T.116 at the time the airplane's landing gear is fully retracted;

(3) The speed equal to the speed V_2.

(c) *Final takeoff.* In the en route configuration, the steady gradient of climb shall not be less than 1.2 percent for two-engine airplanes and not less than 1.7 percent for four-engine airplanes, at the end of the takeoff path as determined by section 4T.116, with:

(1) The critical engine inoperative, the remaining engine(s) operating at the available maximum continuous power and/or thrust;

(2) The weight equal to the airplane's weight existing in accordance with section 4T.116 at the end of the takeoff path.

(3) The speed equal to not less than 1.25 V_s.

(d) *Approach.* In the approach configuration corresponding with the normal all-engines-operating procedure such that V_s related to this configuration does not exceed 110 percent of the V_s corresponding with the related landing configuration, the steady gradient of climb shall not be less than 2.1 percent for two-engine airplanes and not less than 2.7 percent for four-engine airplanes with:

(1) The critical engine inoperative, the remaining engine(s) operating at the available takeoff power and/or thrust;

(2) The weight equal to the maximum landing weight;

(3) A climb speed established by the applicant in connection with normal landing procedures, except that it shall not exceed 1.5 V_s (see sec. 4T.111(c)).

4T.121 *En route flight paths.* With the airplane in the en route configuration, the flight paths prescribed in paragraphs (a) and (b) of this section shall be determined at all weights, altitudes, and ambient temperatures, within the operational limits established by the applicant for the airplane.

(a) *One engine inoperative.* The one-engine-inoperative net flight path data shall be determined in such a manner that they represent the airplane's actual climb performance diminished by a gradient of climb equal to 1.1 percent for two-engine airplanes and 1.6 percent for four-engine airplanes. It shall be acceptable to include in these data the variation of the airplane's weight along the flight path to take into account the progressive consumption of fuel and oil by the operating engine(s).

(b) *Two engines inoperative.* For airplanes with four engines, the two-engine-inoperative net flight path data shall be determined in such a manner that they represent the airplane's actual climb performance diminished by a gradient of climb equal to 0.5 percent. It shall be acceptable to include in these data the variation of the airplane's weight along the flight path to take into account the progressive consumption of fuel and oil by the operating engines.

(c) *Conditions.* In determining the flight paths prescribed in paragraphs (a) and (b) of this section, the conditions of subparagraphs (1) through (4) of this paragraph shall apply.

(1) The airplane's center of gravity shall be in the most unfavorable position.

(2) The critical engine(s) shall be inoperative, the remaining engine(s) operating at the available maximum continuous power and/or thrust.

(3) Means for controlling the engine cooling air supply shall be in the position which provides adequate cooling in the hot-day condition.

(4) The speed shall be selected by the applicant.

4T.122 *Landing distance.* The landing distance shall be the horizontal distance required to land and to come to a complete stop (to a speed

542115 O—60——21

of approximately 3 knots in the case of seaplanes or float planes) from a point at a height of 50 feet above the landing surface. Landing distances shall be determined for standard temperatures at all weights, altitudes, and winds, within the operational limits established by the applicant for the airplane. The conditions of paragraphs (a) through (g) of this section shall apply.

(a) The airplane shall be in the landing configuration. During the landing, changes in the airplane's configuration, in power and/or thrust, and in speed shall be in accordance with procedures established by the applicant for the operation of the airplane in service. The procedures shall comply with the provisions of section 4T.111(c).

(b) The landing shall be preceded by a steady gliding approach down to the 50-foot height with a calibrated air speed of not less than 1.3 V_s.

(c) The landing distance shall be based on a smooth, dry, hard-surfaced runway, and shall be determined in such a manner that reproduction does not require exceptional skill or alertness on the part of the pilot. In the case of seaplanes or float planes, the landing surface shall be smooth water, while for skiplanes it shall be smooth, dry snow. During landing, the airplane shall not exhibit excessive vertical acceleration, a tendency to bounce, nose over, ground loop, porpoise, or water loop.

(d) The landing distance data shall include operational correction factors for not more than 50 percent of nominal wind components along the landing path opposite to the direction of landing and not less than 150 percent of nominal wind components along the landing path in the direction of landing.

(e) During landing, the operating pressures on the wheel braking system shall not be in excess of those approved by the manufacturer of the brakes, and the wheel brakes shall not be used in such a manner as to produce excessive wear of brakes and tires.

(f) In addition to, or in lieu, of, wheel brakes, the use of other braking means shall be acceptable in determining the landing distance, provided such braking means shall have been proven to be safe and reliable, that the manner of their employment is such that consistent results can be expected in service, and that exceptional skill is not required to control the airplane.

(g) If the characteristics of a device (e.g., the propellers) dependent upon the operation of any of the engines noticeably increase the landing distance when the landing is made with the engine inoperative, the landing distance shall be determined with the critical engine inoperative unless the Administrator finds that the use of compensating means will result in a landing distance not greater than that attained with all engines operating.

4T.123 *Limitations and information.*

(a) *Limitations.* The performance limitations on the operation of the airplane shall be established in accordance with subparagraph (1) through (4) of this paragraph. (See also sec. 4T.743.)

(1) *Takeoff weights.* The maximum takeoff weights shall be established at which compliance is shown with the generally applicable provisions of this regulation and with the takeoff climb provisions pre-

scribed in section 4T.120 (a), (b), and (c) for altitudes and ambient temperatures, within the operational limits of the airplane (see subparagraph (4) of this paragraph).

(2) *Landing weights.* The maximum landing weights shall be established at which compliance is shown with the generally applicable provisions of this regulation and with the landing and takeoff climb provisions prescribed in sections 4T.119 and 4T.120 for altitudes and ambient temperatures, within the operational limits of the airplane (see subparagraph (4) of this paragraph).

(3) *Accelerate-stop distance, takeoff distance, and takeoff run.* The minimum distances required for takeoff shall be established at which compliance is shown with the generally applicable provisions of this regulation and with sections 4T.115 and 4T.117(a) and with 4T.117(b) if the takeoff distance is intended to include a clearway, for weights, altitudes, temperatures, wind components, and runway gradients, within the operational limits of the airplane (see subparagraph (4) of this paragraph).

(4) *Operational limits.* The operational limits of the airplane shall be established by the applicant for all variable factors required in showing compliance with this regulation (weight, altitude, temperature, etc.). (See secs. 4T.113 (a)(1) and (b), 4T.115(d), 4T.118, 4T.121, and 4T.122.)

(b) *Information.* The performance information on the operation of the airplane shall be scheduled in compliance with the generally applicable provisions of this regulation and with sections 4T.117a(b), 4T.121, and 4T.122 for weights, altitudes, temperatures, wind components, and runway gradients, as these may be applicable, within the operational limits of the airplane (see subparagraph (a)(4) of this section). In addition, the performance information specified in subparagraphs (1) through (3) of this paragraph shall be determined by extrapolation and scheduled for the ranges of weights between the maximum landing and maximum takeoff weights established in accordance with subparagraphs (a)(1) and (a)(2) of this section. (See also sec. 4T.743.)

(1) Climb in the landing configuration (see sec. 4T.119);

(2) Climb in the approach configuration (see sec. 4T.120(d));

(3) Landing distance (see sec. 4T.122).

AIRPLANE FLIGHT MANUAL

4T.743 *Performance limitations, information, and other data.*

(a) *Limitations.* The airplane's performance limitations shall be given in accordance with section 4T.123(a).

(b) *Information.* The performance information prescribed in section 4T.123(b) for the application of the operating rules of this regulation shall be given together with descriptions of the conditions, air speeds, etc., under which the data were determined.

(c) *Procedures.* Procedures established in accordance with section 4T.111(c) shall be given to the extent such procedures are related to the limitations and information set forth in accordance with paragraphs (a) and (b) of this section. Such procedures, in the form of

guidance material, shall be included with the relevant limitations or information, as applicable.

(d) *Miscellaneous.* An explanation shall be given of significant or unusual flight or ground handling characteristics of the airplane.

3. In lieu of sections 40.70 through 40.78, 41.27 through 41.36(d), and 42.70 through 42.83, of Parts 40, 41, and 42, respectively, of the Civil Air Regulations, the following shall be applicable:

OPERATING RULES

40T.80 *Transport category airplane operating limitations.*

(a) In operating any passenger-carrying transport category airplane certificated in accordance with the performance requirements of this regulation, the provisions of sections 40T.80 through 40T.84 shall be complied with, unless deviations therefrom are specifically authorized by the Administrator on the ground that the special circumstances of a particular case make a literal observance of the requirements unnecessary for safety.

(b) The performance data in the Airplane Flight Manual shall be applied in determining compliance with the provisions of sections 40T.81 through 40T.84. Where conditions differ from those for which specific tests were made, compliance shall be determined by approved interpolation or computation of the effects of changes in the specific variables if such interpolations or computations give results substantially equalling in accuracy the results of a direct test.

40T.81 *Airplane's certificate limitations.*

(a) No airplane shall be taken off at a weight which exceeds the takeoff weight specified in the Airplane Flight Manual for the elevation of the airport and for the ambient temperature existing at the time of the takeoff. (See secs. 4T.123(a)(1) and 4T.743(a).)

(b) No airplane shall be taken off at a weight such that, allowing for normal consumption of fuel and oil in flight to the airport of destination and to the alternate airports, the weight on arrival will exceed the landing weight specified in the Airplane Flight Manual for the elevation of each of the airports involved and for the ambient temperatures anticipated at the time of landing. (See secs. 4T.123(a)(2) and 4T.743(a).)

(c) No airplane shall be taken off at a weight which exceeds the weight at which, in accordance with the minimum distances for takeoff scheduled in the Airplane Flight Manual, compliance with subparagraphs (1) through (3) of this paragraph is shown. These distances shall correspond with the elevation of the airport, the runway to be used, the effective runway gradient, and the ambient temperature and wind component existing at the time of takeoff. (See secs. 4T.123(a)(3) and 4T.743(a).)

(1) The accelerate-stop distance shall not be greater than the length of the runway plus the length of the stopway if present.

(2) The takeoff distance shall not be greater than the length of the runway plus the length of the clearway if present, except that the length of the clearway shall not be greater than one-half of the length of the runway.

(3) The takeoff run shall not be greater than the length of the runway.

(d) No airplane shall be operated outside the operational limits specified in the Airplane Flight Manual. (See secs. 4T.123(a)(4) and 4T.743(a).)

40T.82 *Takeoff obstacle clearance limitations.* No airplane shall be taken off at a weight in excess of that shown in the Airplane Flight Manual to correspond with a net takeoff flight path which clears all obstacles either by at least a height of 35 feet vertically or by at least 200 feet horizontally within the airport boundaries and by at least 300 feet horizontally after passing beyond the boundaries. In determining the allowable deviation of the net takeoff flight path in order to avoid obstacles by at least the distances prescribed, it shall be assumed that the airplane is not banked before reaching a height of 50 feet as shown by the net takeoff flight path data in the Airplane Flight Manual, and that a maximum bank thereafter does not exceed 15 degrees. The net takeoff flight path considered shall be for the elevation of the airport, the effective runway gradient, and for the ambient temperature and wind component existing at the time of takeoff. (See secs. 4T.123(b) and 4T.743(b).)

40T.83 *En route limitations.* All airplanes shall be operated in compliance with paragraph (a) of this section. In addition, no airplane shall be flown along an intended route if any place along the route is more than 90 minutes away from an airport at which a landing can be made in accordance with section 40T.84(b), assuming all engines to be operating at cruising power, unless compliance is shown with paragraph (b) of this section.

(a) *One engine inoperative.* No airplane shall be taken off at a weight in excess of that which, according to the one-engine-inoperative en route net flight path data shown in the Airplane Flight Manual, will permit compliance with either subparagraphs (1) or (2) of this paragraph at all points along the route. The net flight path shall have a positive slope at 1,500 feet above the airport where the landing is assumed to be made after the engine fails. The net flight path used shall be for the ambient temperatures anticipated along the route. (See secs. 4T.123(b) and 4T.743(b).)

(1) The slope of the net flight path shall be positive at an altitude of at least 1,000 feet above all terrain and obstructions along the route within 5 statute miles (4.34 nautical miles) on either side of the intended track.

(2) The net flight path shall be such as to permit the airplane to continue flight from the cruising altitude to an airport where a landing can be made in accordance with the provisions of section 40T.84(b), the net flight path clearing vertically by at least 2,000 feet all terrain and obstructions along the route within 5 statute miles (4.34 nautical miles) on either side of the intended track. The provisions of subdivisions (i) through (vi) of this subparagraph shall apply.

(i) The engine shall be assumed to fail at the most critical point along the route.

(ii) The airplane shall be assumed to pass over the critical obstruction following engine failure at a point no closer to the critical

obstruction than the nearest approved radio navigational fix, except that the Administrator may authorize a procedure established on a different basis where adequate operational safeguards are found to exist.

(iii) An approved method shall be used to account for winds which would otherwise adversely affect the flight path.

(iv) Fuel jettisoning shall be permitted if the Administrator finds that the operator has an adequate training program, proper instructions are given to the flight crew, and all other precautions are taken to ensure a safe procedure.

(v) The alternate airport shall be specified in the dispatch release and shall meet the prescribed weather minima.

(vi) The consumption of fuel and oil after the engine is assumed to fail shall be that which is accounted for in the net flight path data shown in the Airplane Flight Manual.

(b) *Two engines inoperative.* No airplane shall be taken off at a weight in excess of that which, according to the two-engine-inoperative en route net flight path data shown in the Airplane Flight Manual, will permit the airplane to continue flight from the point where two engines are assumed to fail simultaneously to an airport where a landing can be made in accordance with the provisions of section 40T.84(b), the net flight path clearing vertically by at least 2,000 feet all terrain and obstructions along the route within 5 statute miles (4.34 nautical miles) on either side of the intended track. The net flight path considered shall be for the ambient temperatures anticipated along the route. The provisions of subparagraphs (1) through (5) of this paragraph shall apply. (See secs. 4T.123(b) and 4T.734(b).)

(1) The two engines shall be assumed to fail at the most critical point along the route.

(2) The net flight path shall have a positive slope at 1,500 feet above the airport where the landing is assumed to be made after failure of two engines.

(3) Fuel jettisoning shall be permitted if the Administrator finds that the operator has an adequate training program, proper instructions are given to the flight crew, and all other precautions are taken to ensure a safe procedure.

(4) The airplane's weight at the point where the two engines are assumed to fail shall be considered to be not less than that which would include sufficient fuel to proceed to the airport and to arrive there at an altitude of at least 1,500 feet directly over the landing area and thereafter to fly for 15 minutes at cruise power and/or thrust.

(5) The consumption of fuel and oil after the engines are assumed to fail shall be that which is accounted for in the net flight path data shown in the Airplane Flight Manual.

40T.84 *Landing limitations.*

(a) *Airport of destination.* No airplane shall be taken off at a weight in excess of that which, in accordance with the landing distances shown in the Airplane Flight Manual for the elevation of the airport of intended destination and for the wind conditions anticipated there at the time of landing, would permit the airplane to be brought to rest at the airport of intended destination within 60 percent of the effective length of the runway from a point 50 feet directly above the intersection of the

obstruction clearance plane and the runway. The weight of the airplane shall be assumed to be reduced by the weight of the fuel and oil expected to be consumed in flight to the airport of intended destination. Compliance shall be shown with the conditions of subparagraphs (1) and (2) of this paragraph. (See secs. 4T.123(b) and 4T.743(b).)

(1) It shall be assumed that the airplane is landed on the most favorable runway and direction in still air.

(2) It shall be assumed that the airplane is landed on the most suitable runway considering the probable wind velocity and direction and taking due account of the ground handling characteristics of the airplane and of other conditions (i.e., landing aids, terrain, etc.). If full compliance with the provisions of this subparagraph is not shown, the airplane may be taken off if an alternate airport is designated which permits compliance with paragraph (b) of this section.

(b) *Alternate airport.* No airport shall be designated as an alternate airport in a dispatch release unless the airplane at the weight anticipated at the time of arrival at such airport can comply with the provisions of paragraph (a) of this section, provided that the airplane can be brought to rest within 70 percent of the effective length of the runway.

4. In lieu of section 43.11 of Part 43 of the Civil Air Regulations the following shall be applicable.

43T.11 *Transport category airplane weight limitations.* The performance data in the Airplane Flight Manual shall be applied in determining compliance with the following provisions:

(a) No airplane shall be taken off at a weight which exceeds the takeoff weight specified in the Airplane Flight Manual for the elevation of the airport and for the ambient temperature existing at the time of the takeoff. (See secs. 4T.123(a)(1) and 4T.743(a).)

(b) No airplane shall be taken off at a weight such that, allowing for normal consumption of fuel and oil in flight to the airport of destination and to the alternate airports, the weight on arrival will exceed the landing weight specified in the Airplane Flight Manual for the elevation of each of the airports involved and for the ambient temperatures anticipated at the time of landing. (See secs. 4T.123(a)(2) and 4T.743(a).)

(c) No airplane shall be taken off at a weight which exceeds the weight at which, in accordance with the minimum distances for takeoff scheduled in the Airplane Flight Manual, compliance with subparagraphs (1) through (3) of this paragraph is shown. These distances shall correspond with the elevation of the airport, the runway to be used, the effective runway gradient, and the ambient temperature and wind component existing at the time of takeoff. (See secs. 4T.123(a)(3) and 4T.734(a).)

(1) The accelerate-stop distance shall not be greater than the length of the runway plus the length of the stopway if present.

(2) The takeoff distance shall not be greater than the length of the runway plus the length of the clearway if present, except that the length of the clearway shall not be greater than one-half of the length of the runway.

(3) The takeoff run shall not be greater than the length of the runway.

(d) No airplane shall be operated outside the operational limits specified in the Airplane Flight Manual. (See secs. 4T.123(a)(4) and 4T.743(a).)

5. The following definitions shall apply:

(a) *Clearway.* A clearway is an area beyond the runway, not less than 500 feet wide, centrally located about the extended center line of the runway, and under the control of the airport authorities. The clearway is expressed in terms of a clearway plane, extending from the end of the runway with an upward slope not exceeding 1.25 percent, above which no object nor any portion of the terrain protrudes, except that threshold lights may protrude above the plane if their height above the end of the runway is not greater than 26 inches and if they are located to each side of the runway.

NOTE: For the purpose of establishing takeoff distances and takeoff runs, in accordance with section 4T.117 of this regulation, the clearway plane is considered to be the takeoff surface.

(b) *Stopway.* A stopway is an area beyond the runway, not less in width than the width of the runway, centrally located about the extended center line of the runway, and designated by the airport authorities for use in decelerating the airplane during an aborted takeoff: To be considered as such, a stopway must be capable of supporting the airplane during an aborted takeoff without inducing structural damage to the airplane. (See also sec. 4T.115(d) of this regulation.)

SPECIAL CIVIL AIR REGULATIONS NO. SR–423

Effective: December 20, 1957
Adopted: November 15, 1957

Type Certification of Transport Category Airplanes With Turbo-Prop Replacements

The airworthiness requirements with which a particular airplane is required to comply are established by the date of application for the type certificate. After the type certificate is issued, the holder of the type certificate or an applicant for a supplemental type certificate, at his option, can obtain approval of changes in the design in accordance with requirements in effect at the time of the original application for type certificate or in accordance with later requirements in effect at the time of the change.

Prior to May 18, 1954, the regulations placed no specific limit on the extent of changes to the airplane which could be approved in this manner nor did they define a new type design for which a new application for type certification would be required. Amendment 4b–1 effective on that date, among other changes in Part 4b, lists certain changes in design which if made to an airplane would require it to be considered as a new type. In such a case, a new application for type certification would be required and the regulations, together with all amendments thereto effective on the date of the new application, would have to be complied with (sec. 4b.11(a)). One such change which would require a new type certificate is a change to engines employing different priciples of operation or propulsion (sec 4b.11(e)(2)).

Interest has been shown recently within the aviation industry in the installation of turbo-propeller engines on airplanes presently equipped with reciprocating engines. In accordance with sec. 4b.11(e)(2) such a change would require a showing of compliance with the latest airworthiness requirements of Part 4b. The Board is of the opinion that showing of compliance with all of the latest requirements might be burdensome, impractical, and not essential to safety.

This Special Civil Air Regulation will permit the certification of a turbo-propeller-powered airplane, which previously was type certificated with the same number of reciprocating engines, if compliance is shown with the airworthiness provisions applicable to the airplane as type certificated with reciprocating engines, together with certain later provisions of the Civil Air Regulations in effect on the date of application for a supplemental or new type certificate which are applicable or related to the powerplant of the turbo-propeller-powered version.

In order to insure that the level of safety of the turbine-powered airplane is equivalent to that intended by Part 4b, the Board considers that compliance must be shown with the later provisions of Part 4b which apply to the powerplant installation, airplane performance, and cockpit standardization, such other requirements as the Administrator finds are otherwise related to the changes made in the engines.

Special Civil Air Regulation No. SR–422 establishes certain certification and operational requirements for all turbine-powered airplanes for which a type certificate is issued after the effective date of that regulation. Except as otherwise provided, all of the provisions of SR–422 remain applicable to airplanes certificated in accordance with the regulation prescribed herein. Therefore, to be certificated in accordance with the regulation prescribed herein compliance must be shown with the certification performance requirements prescribed in paragraph 2 of SR–422.

It must be emphasized that the certification performance limitations established by the performance requirements; i.e., the take-off weights, landing weights, take-off and accelerate-stop distances, and the operational limits, become part of the airworthiness certificate and must be complied with at all times, regardless of the type of operations conducted with the airplane. (See sec. 43.10, as amended, of Part 43 of the Civil Air Regulations.)

In addition to certification performance limitations, SR–422 prescribes performance operating limitations which are applicable to turbine-powered transport category airplanes when used in air carrier passenger operations. Since turbo-propeller-powered airplanes certificated in accordance with the regulation prescribed herein are required to comply with the certification performance requirements of SR–422, they are also subject to the performance operating limitations prescribed in paragraph 3 of SR–422 when used in air carrier passenger operations.

Since a change in engines will require a rather extensive change in the cockpit to accommodate the new instruments and controls for turbine engines, the Board considers that compliance with the latest cockpit standardization requirements can be accomplished without any undue burden and such compliance would speed up the cockpit standardization of other airplanes in an airline's fleet in accordance with the Board's objectives. Therefore, this regulation makes the latest cockpit standardization requirements applicable, with the exception of such detailed requirements as the Administrator finds are impracticable, and do not contribute materially to standardization. It should be noted that in referring to this exception in the preamble to Draft Release No. 56–29, the use of the conjunction "or" after the word "impracticable" was inadvertent. As the language of the proposed regulation clearly indicated, "and" was the proper conjunction following the word "impracticable."

The Board also considers it appropriate to call attention to the fact that if other changes to the airplane are made simultaneously with, or subsequent to, such an engine change, then compliance will also have to be shown with all requirements related to the additional changes in effect on the date of the new application for a supplemental or new type certificate. In this regard, if an airplane converted to turbo-propeller power is to be certificated for operation at altitudes, speeds, or weights higher than those which are applicable to the reciprocating-engine-powered airplane, compliance will be required with all the latest provisions of the regulations which are related to such changes.

In order to assure that all airplanes converted to turbo-propeller power meet the minimum requirements considered essential to safety, this regulation is made retroactive and requires compliance with the provisions of the Civil Air Regulations as set forth herein for all of such

airplanes for which application for a supplemental or new type certificate was made prior to the effective date of this regulation.

This Special Civil Air Regulation shall continue in effect for 5 years, at the end of which time the effectiveness of the regulation will be evaluated for the purpose of considering the incorporation of the substance of these rules in the permanent body of the Civil Air Regulations.

Interested persons have been afforded an opportunity to participate in the making of this Special Civil Air Regulation (21 F.R. 9436), and due consideration has been given to all relevant matter presented.

In consideration of the foregoing, the Civil Aeronautics Board hereby makes and promulgates the following Special Civil Air Regulation effective December 20, 1957.

Contrary provisions of section 4b.11(a) as it applies to section 4b.11 (e)(2) of Part 4b of the Civil Air Regulations and paragraph (1) of Special Civil Air Regulation No. SR–422 notwithstanding, the following provisions shall be applicable to the certification of a turbo-propeller-powered airplane which was previously type certificated with the same number of reciprocating engines:

(1) The airworthiness regulations applicable to the airplane as type certificated with reciprocating engines and, in addition thereto or in lieu thereof as appropriate, the following provisions of the Civil Air Regulations effective on the date of application for a supplemental or new type certificate (see paragraph (3)):

(a) The certification performance requirements prescribed in Special Civil Air Regulation No. SR–422;

(b) The powerplant installation requirements of Part 4b applicable to the turbo-propeller-powered airplane;

(c) The requirements of Part 4b for the standardization of cockpit controls and instruments, except where the Administrator finds that showing of compliance with a particular detailed requirement would be impractical and would not contribute materially to standardization; and

(d) Such other requirements of Part 4b applicable to the turbo-propeller-powered airplane as the Administrator finds are related to the changes in engines and are necessary to insure a level of safety of the turbo-propeller-powered airplane equivalent to that generally intended by Part 4b.

(2) If new limitations are established with respect to weight, speed, or altitude of operation and the Administrator finds that such limitations are significantly altered from those approved for the airplane with reciprocating engines, compliance shall be shown with all of the requirements, applicable to the specific limitations being changed, which are in effect on the date of application for the new or supplemental type certificate.

(3) Airplanes converted to turbo-propeller power, for which application for a supplemental or a new type certificate was made prior to the effective date of this Special Civil Air Regulation, shall comply with all of the provisions of the Civil Air Regulations specified in paragraphs (1) and (2) effective on the date of this special regulation, rather than those provisions effective on the date application was made for the supplemental or the new type certificate.

This Special Civil Air Regulation shall terminate December 20, 1962 unless sooner superseded or rescinded by the Board.

SPECIAL CIVIL AIR REGULATION NO. 425C

Effective: June 6, 1961
Adopted: May 31, 1961
Published: June 6, 1961
(26 F.R. 4990)

Provisional Certification and Operation of Aircraft

Special Civil Air Regulation No. SR–425A was adopted on July 22, 1958, to provide for provisional certification of turbine-powered transport category airplanes in order to permit certain air carriers and manufacturers to conduct crew training, service testing, and simulated air carrier operations prior to introduction of the airplanes into commercial service. The objective of this regulation was to provide a means whereby the air carriers and manufacturers could obtain as much experience as possible with turbine-powered airplanes which, although safe for flight, had not been approved for the issuance of a type certificate.

Special Civil Air Regulation No. SR–425B, which superseded SR–425A, was adopted on April 7, 1960, to extend the application of the regulation to: (1) piston-engine transport category aircraft, including rotorcraft; and (2) personal and executive type aircraft, including rotorcraft, irrespective of powerplant type. In addition, this regulation permitted operations such as sales demonstrations and market surveys with aircraft having a provisional type and airworthiness certificate.

To accomplish this, SR–425B provided for, among other things, the issuance of two classes of provisional type and airworthiness certificates. Class I provisional and airworthiness certificates could be issued for all types of aircraft for operation by the aircraft manufacturer. Class II provisional type and airworthiness certificates could be issued only for transport category aircraft, but these aircraft could be operated by either the aircraft manufacturer or a certificated air carrier. In general, the requirements for the issuance of Class I provisional certificates were less stringent, and the operating limitations less confining, than those for the issuance of Class II provisional certificates.

Under the provisions of SR–425B, however, eligibility to apply for Class I provisional certificates was limited to aircraft manufacturers. A recommendation that this eligibility be extended to include engine manufacturers had been evaluated by the Agency prior to the adoption of SR–425B, but rule making action on such extension was deferred until additional experience with provisional certification could be acquired.

Experience accumulated since the adoption of SR–425B has indicated that it would be practicable for engine manufacturers, who have altered a type certificated aircraft by installing type certificated engines of their own manufacture in place of the original engines, to show compliance with the currently effective requirements for issuance of Class I provisional type and provisional airworthiness certificates; and that compliance with these requirements will insure safe operation of provisionally certificated aircraft by such engine manufacturers. Further, the Agency

believes that operations conducted by engine manufacturers under the terms of Class I provisional certificates, for the purpose of sales demonstrations, market surveys, and other similar activities related to the sale of their engines, would contribute to the promotion and development of civil aeronautics in the United States.

SR–425B is therefore being superseded by SR–425C to permit certain engine manufacturers to apply for Class I provisional type and provisional airworthiness certificates if they have applied for the issuance of a supplemental type certificate.

Since this is a superseding regulation which relieves restrictions and imposes no additional burden on any person, notice and public procedures hereon are unnecessary, and this regulation may be made effective on less than 30 days' notice.

In consideration of the foregoing, the following Special Civil Air Regulation is adopted to become effective June 6, 1961:

GENERAL

1. *Applicability.* Contrary provisions of the Civil Air Regulations notwithstanding, provisional type and airworthiness certificates, amendments to provisional type certificates, and provisional amendments to type certificates, will be issued as prescribed in this regulation to a manufacturer or an air carrier. As used in this regulation, a manufacturer shall mean only a manufacturer who is a citizen of the United States; and the term air carrier shall not include an air taxi operator.

2. *Eligibility.*

(a) A manufacturer of aircraft manufactured by him within the United States may apply for Class I or Class II provisional type and provisional airworthiness certificates, for amendments to provisional type certificates held by him, and for provisional amendments to type certificates held by him.

(b) An air carrier holding an air carrier operating certificate authorizing him to conduct operations under Parts 40, 41, 42, or 46 of the Civil Air Regulations may apply for Class II provisional airworthiness certificates for transport category aircraft which meet the conditions of either subparagraphs (1) or (2) of this paragraph.

(1) The aircraft has a currently valid Class II provisional type certificate or an amendment thereto;

(2) The aircraft has a currently valid provisional amendment to a type certificate which was preceded by a corresponding Class II provisional type certificate.

(c) An engine manufacturer who has altered a type certificated aircraft by installing different type certificated engines, manufactured by him within the United States, in place of the original engines, may apply for Class I provisional type and provisional airworthiness certificates for such aircraft, and for amendments to Class I provisional type certificates held by him, if the basic aircraft, before alteration was type certificated in the normal, utility, acrobatic, or transport category.

3. *Application.*

(a) *General.* Applications for provisional type and airworthiness certificates, for amendments to provisional type certificates, and for

provisional amendments to type certificates, shall be submitted to the Chief, Flight Standards Division, FAA, of the Regional Office in which the manufacturer or air carrier is located and shall be accompanied by the pertinent information specified in this regulation.

4. *Duration.* Unless sooner surrendered, superseded, revoked, or otherwise terminated, certificates and amendments thereto, shall have periods of duration in accordance with paragraphs (a) through (f) of this section.

(a) A Class I provisional type certificate shall remain in effect for 24 months after the date of its issuance or until the date of issuance of the corresponding type or supplemental type certificate, whichever occurs first.

(b) A Class I provisional type certificate shall expire immediately upon issuance of a Class II provisional type certificate for aircraft of the same type design.

(c) A Class II provisional type certificate shall remain in effect for 6 months after the date of its issuance or 60 days after the date of issuance of the corresponding type certificate, whichever occurs first.

(d) An amendment to a Class I or a Class II provisional type certificate shall remain in effect for the duration of the corresponding provisional type certificate.

(e) A provisional amendment to a type certificate shall remain in effect for 6 months after its approval or until the amendment to the type certificate is approved, whichever occurs first.

(f) Provisional airworthiness certificates shall remain in effect for the duration of the corresponding provisional type certificate, amendment to a provisional type certificate, or a provisional amendment to the type certificate.

5. *Transferability of certificates.* Certificates issued pursuant to this regulation are not transferable except that a Class II provisional airworthiness certificate may be transferred to an air carrier eligible to apply for such certificate under section 2 of this regulation.

6. *Display of certificates and markings.* A provisional airworthiness certificate shall be prominently displayed in the aircraft for which it is issued. The words "Provisional Airworthiness" shall be painted in letters not less than 2 inches high on the exterior of such aircraft adjacent to each entrance to the cabin and cockpit of the aircraft.

REQUIREMENTS FOR ISSUANCE

7. *Class I provisional type certificates.* A Class I provisional type certificate and amendments thereto will be issued for a particular type design when the eligible aircraft or engine manufacturer shows compliance with the provisions of paragraphs (a) through (f) of this section, and an authorized representative of the Administrator finds, on the basis of information submitted to him by the manufacturer in compliance with the provisions of this section and of other relevant information, that there is no feature, characteristic, or condition which would render the aircraft unsafe when operated in accordance with the limitations established in paragraph (d) of this section and in section 13 of this regulation.

(a) The manufacturer has applied for the issuance of a type or supplemental type certificate for the aircraft.

(b) The manufacturer certifies that the aircraft has met the provisions of subparagraphs (1) through (3) of this paragraph.

(1) The aircraft has been designed and constructed in accordance with the airworthiness requirements applicable to the issuance of the type or supplemental type certificate for the aircraft;

(2) The aircraft substantially complies with the applicable flight characteristics requirements for the type or supplemental type certificate;

(3) The aircraft can be operated safely under the appropriate operating limitations specified in this regulation.

(c) The manufacturer has submitted a report showing that the aircraft had been flown in all maneuvers necessary to show compliance with the flight requirements for the issuance of the type or supplemental type certificate and to establish that the aircraft can be operated safely in accordance with the limitations specified in this regulation.

(d) The manufacturer has established limitations with respect to weights, speeds, flight maneuvers, loading, operation of controls and equipment, and all other relevant factors. The limitations shall include all the limitations required for the issuance of a type or supplemental type certificate for the aircraft: *Provided,* That, where such limitations have not been established, appropriate restrictions on the operation of the aircraft shall be established.

(e) The manufacturer has established an inspection and maintenance program for the continued airworthiness of the aircraft.

(f) A prototype aircraft has been flown by the manufacturer for at least 50 hours pursuant to the authority of an experimental certificate issued under Part 1 of the Civil Air Regulations or under the auspices of a United States military service: *Provided,* That the number of flight hours may be reduced by the authorized representative of the Administrator in the case of an amendment to a provisional type certificate.

8. *Class I provisional airworthiness certificates.* Except as provided in section 12 of this regulation, a Class I provisional airworthiness certificate will be issued for an aircraft, for which a Class I provisional type certificate is in effect, when the eligible aircraft or engine manufacturer shows compliance with the provisions of paragraphs (a) through (d) of this section, and an authorized representative of the Administrator finds that there is no feature, characteristic, or condition of the aircraft which would render the aircraft unsafe when operated in accordance with the limitations established in sections 7(d) and 13 of this regulation.

(a) The manufacturer is the holder of the provisional type certificate for the aircraft.

(b) The manufacturer submits a statement that the aircraft conforms to the type design corresponding with the provisional type certificate and has been found by him to be in safe operating condition under the applicable limitations.

(c) The aircraft has been flown at least 5 hours by the manufacturer.

(d) The aircraft has been supplied with a provisional aircraft flight manual or other document and appropriate placards containing the limitations required by sections 7(d) and 13 of this regulation.

9. *Class II provisional type certificates.* A Class II provisional type certificate and amendments thereto will be issued for a particular transport category type design when the manufacturer of the aircraft shows compliance with the provisions of paragraphs (a) through (h) of this section, and an authorized representative of the Administrator finds, on the basis of information submitted to him by the manufacturer in compliance with the provisions of this section and of other relevant information, that there is no feature, characteristic, or condition which would render the aircraft unsafe when operated in accordance with the limitations established in paragraph (f) of this section and in sections 13 and 14 of this regulation.

(a) The manufacturer has applied for the issuance of a transport category type certificate for the aircraft.

(b) The manufacturer holds a type certificate and a currently effective production certificate for at least one other aircraft in the same transport category as the subject aircraft.

(c) The Agency's official flight test program with respect to the issuance of a type certificate for the aircraft is in progress.

(d) The manufacturer certifies that the aircraft has met the provisions of subparagraphs (1) through (3) of this paragraph.

(1) The aircraft has been designed and constructed in accordance with the airworthiness requirements applicable to the issuance of the type certificate for the aircraft;

(2) The aircraft substantially complies with the applicable flight characteristics requirements for the type certificate;

(3) The aircraft can be operated safely under the appropriate operating limitations specified in this regulation.

(e) The manufacturer has submitted a report showing that the aircraft had been flown in all maneuvers necessary to show compliance with the flight requirements for the issuance of the type certificate and to establish that the aircraft can be operated safely in accordance with the limitations specified in this regulation.

(f) The manufacturer has prepared a provisional aircraft flight manual which includes limitations with respect to weights, speeds, flight maneuvers, loading, operation of controls and equipment, and all other relevant factors. The limitations shall include all the limitations required for the issuance of a type certificate for the aircraft: *Provided,* That, where such limitations have not been established, the provisional flight manual shall contain appropriate restrictions on the operation of the aircraft.

(g) The manufacturer has established an inspection and maintenance program for the continued airworthiness of the aircraft.

(h) A prototype aircraft has been flown by the manufacturer for at least 100 hours pursuant to the authority of either an experimental certificate issued under Part 1 of the Civil Air Regulations or a Class I provisional airworthiness certificate: *Provided,* That the number of flight hours may be reduced by the authorized representative of the Administrator in the case of an amendment to a provisional type certificate.

10. *Class II provisional airworthiness certificates.* Except as provided in section 12 of this regulation, a Class II provisional airworthiness certificate will be issued for an aircraft, for which a Class II provisional type certificate is in effect, when the applicant shows compliance with the provisions of paragraphs (a) through (e) of this section, and an authorized representative of the Administrator finds that there is no feature, characteristic, or condition of the aircraft which would render the aircraft unsafe when operated in accordance with the limitations established in sections 9(f), 13, and 14 of this regulation.

(a) The applicant submits evidence that a Class II provisional type certificate for the aircraft has been issued to the manufacturer.

(b) The applicant submits a statement by the manufacturer that the aircraft has been manufactured under a quality control system adequate to insure that the aircraft conforms to the type design corresponding with the provisional type certificate.

(c) The applicant submits a statement that the aircraft has been found by him to be in a safe operating condition under the applicable limitations.

(d) The applicant submits a statement that the aircraft has been flown at least 5 hours by the manufacturer.

(e) The aircraft has been supplied with a provisional aircraft flight manual containing the limitations required by sections 9(f), 13, and 14 of this regulation.

11. *Provisional amendments to type certificate.* A provisional amendment to a type certificate will be approved when the manufacturer of the type certificated aircraft shows compliance with the provisions of paragraphs (a) through (g) of this section, and an authorized representative of the Administrator finds, on the basis of information submitted to him by the manufacturer in compliance with the provisions of this section and of other relevant information, that there is no feature, characteristic, or condition which would render the aircraft unsafe when operated in accordance with the limitations established in paragraph (e) of this section, and section 13 and, if applicable, section 14 of this regulation.

(a) The manufacturer has applied for an amendment to the type certificate.

(b) The Agency's official flight test program with respect to the amendment of the type certificate is in progress.

(c) The manufacturer certifies that the aircraft has met the provisions of subparagraphs (1) through (3) of this paragraph.

(1) The modification involved in the amendment to the type certificate has been designed and constructed in accordance with the airworthiness requirements applicable to the issuance of the type certificate for the aircraft;

(2) The aircraft substantially complies with the applicable flight characteristics requirements for the type certificate;

(3) The aircraft can be operated safely under the appropriate operating limitations specified in this regulation.

(d) The manufacturer has submitted a report showing that the aircraft incorporating the modifications involved had been flown in all maneuvers necessary to show compliance with the flight require-

ments applicable to these modifications and to establish that the aircraft can be operated safely in accordance with the limitations specified in this regulation.

(e) The manufacturer has established, in a provisional aircraft flight manual or other document and appropriate placards, limitations with respect to weights, speeds, flight maneuvers, loading, operation of controls and equipment, and all other relevant factors. The limitations shall include all the limitations required for the issuance of a type certificate for the aircraft: *Provided,* That, where such limitations have not been established, appropriate restrictions on the operation of the aircraft shall be established.

(f) The manufacturer has established an inspection and maintenance program for the continued airworthiness of the aircraft.

(g) An aircraft modified in accordance with the corresponding amendment to the type certificate has been flown by the manufacturer for the number of hours found necessary by the authorized representative of the Administrator, such flights having been conducted pursuant to the authority of an experimental certificate issued under Part 1 of the Civil Air Regulations.

12. *Provisional airworthiness certificates corresponding with provisional amendment to type certificate.* A Class I or a Class II provisional airworthiness certificate, as specified in section 2 of this regulation, will be issued for an aircraft, for which a provisional amendment to the type certificate has been issued, when the applicant shows compliance with the provisions of paragraphs (a) through (e) of this section, and an authorized representative of the Administrator finds that there is no feature, characteristic, or condition of the aircraft, as modified in accordance with the provisionally amended type certificate, which would render the aircraft unsafe when operated in accordance with the limitations established in sections 11(e) and 13 and, if applicable, section 14 of this regulation.

(a) The applicant submits evidence that approval has been obtained for the relevant provisional amendment to the type certificate for the aircraft.

(b) The applicant submits evidence that the modification to the aircraft was accomplished under a quality control system adequate to insure that the modification conforms to the provisionally amended type certificate.

(c) The applicant submits a statement that the aircraft has been found by him to be in a safe operating condition under the applicable limitations.

(d) The applicant submits a statement that the aircraft has been flown at least 5 hours by the manufacturer.

(e) The aircraft has been supplied with a provisional aircraft flight manual or other document and appropriate placards containing the limitations required by sections 11(e) and 13 and, if applicable, section 14 of this regulation.

OPERATING LIMITATIONS

13. *Operation of provisionally certificated aircraft.* An aircraft for which a provisional airworthiness certificate has been issued shall

be operated only by a person eligible to apply for a provisional airworthiness certificate in accordance with section 2 of this regulation. Operations shall be in compliance with paragraphs (a) through (j) of this section.

(a) The aircraft shall not be operated in air transportation unless so authorized in a particular case by the Director, Bureau of Flight Standards.

(b) Operations shall be restricted to the United States, its Territories and possessions.

(c) The aircraft shall be limited to the types of operations listed in subparagraphs (1) through (7) of this paragraph.

(1) Flights conducted by the aircraft or engine manufacturer in direct conjunction with the type or supplemental type certification of the aircraft;

(2) Training of flight crews, including simulated air carrier operations;

(3) Demonstration flights conducted by the manufacturer for prospective purchasers;

(4) Market surveys by the manufacturer;

(5) Flight checking of instruments, accessories, and equipment, the functioning of which does not adversely affect the basic airworthiness of the aircraft;

(6) Service testing of the aircraft;

(7) Such additional operations as may be specifically authorized by the authorized representative of the Administrator.

(d) All operations shall be conducted within the prescribed limitations displayed in the aircraft or set forth in the provisional aircraft flight manual or other document containing the limitations for the safe operation of the aircraft: *Provided,* That operations conducted in direct conjunction with the type or supplemental type certification of the aircraft shall be subject to the experimental aircraft limitations of section 1.74 of Part 1 of the Civil Air Regulations, and all "flight tests" as defined in section 60.60 of the Civil Air Regulations shall be conducted in accordance with the requirements of section 60.24 of that part.

(e) The operator shall establish procedures for the use and guidance of flight and ground personnel in the conduct of operations under this section. Specific procedures shall be established for operations from and into airports where the runways require takeoffs or approaches over populated areas. All procedures shall be approved by an authorized representative of the Administrator. All operations shall be conducted in accordance with such approved procedures.

(f) The operator shall insure that each flight crewmember is properly certificated and possesses adequate knowledge of, and familiarity with, the aircraft and the procedures to be used by him.

(g) The aircraft shall be maintained in accordance with applicable Civil Air Regulations, with the inspection and maintenance program established in accordance with this regulation, and with any special inspections and maintenance conditions prescribed by an authorized representative of the Administrator.

(h) No aircraft shall be operated under authority of a provisional airworthiness certificate if the manufacturer or the authorized

representative of the Administrator determines that a change in design, construction, or operation is necessary to insure safe operation, until such change is made and approved by the authorized representative of the Administrator. Section 1.24 of Part 1 of the Civil Air Regulations shall be applicable to operations under this section.

(i) Only those persons who have a bona fide interest in the operations permitted under this section or who are specifically authorized by both the manufacturer and the authorized representative of the Administrator may be carried in provisionally certificated aircraft: *Provided,* That they have been advised by the operator of the provisional certification status of the aircraft.

(j) The authorized representative of the Administrator may prescribe such additional limitations or procedures as he finds necessary. This shall include limitations on the number of persons who may be carried aboard the aircraft.

14. *Additional limitations to operations by air carriers.* In addition to the limitations in section 13 of this regulation, operations by air carriers shall be subject to the provisions of paragraphs (a) through (d) of this section.

(a) In addition to crewmembers, the aircraft may carry only those persons who are listed in section 40.356(c) of Part 40 of the Civil Air Regulations or who are specifically authorized by both the air carrier and the authorized representative of the Administrator.

(b) The air carrier shall maintain current records for each flight crewmember. These records shall include such information as is necessary to show that each flight crewmember is properly trained and qualified to perform his assigned duties.

(c) The appropriate instructor, supervisor, or check airman shall certify to the proficiency of each flight crewmember and such certification shall become a part of the flight crewmember's record.

(d) A log of all flights conducted under this regulation, and accurate and complete records of inspections made and maintenance accomplished, shall be kept by the air carrier and made available to the manufacturer and to an authorized representative of the Administrator.

15. *Other operations.* The Director, Bureau of Flight Standards, may credit toward the aircraft proving test requirements of the applicable air carrier regulations such operations conducted pursuant to this special regulation as he finds have met the applicable aircraft proving test requirements: *Provided,* That he also finds that there is no significant difference between the provisionally certificated aircraft and the aircraft for which application is made for operation pursuant to an air carrier operating certificate.

CERTIFICATES ISSUED UNDER SR–425A AND SR–425B

16. *Duration.* Currently valid provisional type and airworthiness certificates issued in accordance with Special Civil Air Regulations Nos. SR–425A and SR–425B shall remain in effect for the durations and under the conditions prescribed in those regulations.

This special regulation supersedes Special Civil Air Regulation No. SR–425B and shall terminate on June 30, 1963, unless sooner superseded, rescinded, or otherwise terminated.

U.S. GOVERNMENT PRINTING OFFICE : 1961 O - 600000

SPECIAL CIVIL AIR REGULATION NO. SR-426

Effective: October 27, 1958
Adopted: September 22, 1958

Performance Credit for Transport Category Airplanes Equipped with Standby Power

Standby power is power and/or thrust obtained from rocket engines and is separate from the power obtained from the airplane's main engines. Such power and/or thrust is available for a relatively short period for use in cases of emergency. The standby power system may be capable of producing more than a single thrust period. This special regulation authorizes the Administrator to grant performance credit to transport category airplanes when standby power is used in one or more of the following regimes of flight: Takeoff with one engine inoperative, approach climb with one engine inoperative, and the balked landing climb. By "performance credit" is meant the taking into account the increased performance of the airplane with standby power and, because thereof, the approval of higher maximum weights for the airplane than the weights approved on the basis of the airplane's performance without standby power. In granting performance credit, this regulation prescribes the applicable conditions and limitations.

Rocket assist takeoff units were developed initially for the military services to provide additional takeoff power for heavily loaded flying boats and carrier-based aircraft. The additional thrust improved the climb performance in the takeoff regime and permitted the airplane to attain a safe altitude and air speed in the event of engine failure. The reliability of such units has increased to the point where some civil operators have adopted them for use as emergency standby power in the event of engine failure. Other operators have been reluctant to adopt standby power installations and the attendant weight penalties without reasonable performance credit being given the airplane. With the performance credit granted by this regulation for the use of standby power, it is anticipated that such credit might be considered a compensating economic factor justifying the installation of standby power on such airplanes.

The currently effective regulations did not contemplate the use of standby power; however, the Administrator of Civil Aeronautics has established for an interim period a conservative policy permitting transport category airplanes equipped with standby power to operate at an increase in the normally approved weights by an amount equal to the weight of the standby power units.

In this regulation, the criteria for granting performance credit were formulated with the intent of providing an overall level of performance equivalent to that intended by the currently effective regulations. To this end, appropriate criteria are established with respect to the amount of performance credit which may be applied in determining the new takeoff paths, the extent to which the maximum certificated takeoff and landing weights may be increased, and operating procedures to be followed in service for the use of standby power and for the associated changes in the airplane's configuration and speed.

The basic element of the various criteria established in this regulation entails a comparison of flight paths. In Civil Air Regulations

Draft Release No. 57–28, all of the flight paths were based on procedures involving attainment of the en route configuration and the acceleration to a safe en route speed. Further consideration of this proposal indicates that an undue amount of flight testing and computation would be required for those flight conditions which presently do not involve the establishment of such flight paths. In addition, it appears that comparison of flight paths involving a particular procedure is not essential for the purpose of establishing an equivalent level of safety. In view of the foregoing, this regulation requires comparison of flight paths with respect to the takeoff regime consistent only with that required by the currently effective airworthiness performance requirements; i.e., Part 4b and Special Civil Air Regulations Nos. SR–422 and SR–422A. Further, the establishment of maximum landing weights is based on a comparison of flight paths obtained with a fixed airplane configuration and at the speed and power condition appropriate to the all-engines-operating landing climb or the one-engine-inoperative approach climb, as applicable.

Performance credit for standby power with respect to the takeoff path is limited by the specification that the all-engines-operating takeoff path reflect a conservatively greater margin of overall performance than the one-engine-inoperative takeoff path with standby power in use. It is intended that this margin exist throughout the takeoff path prescribed by the applicable performance requirements. This regulation provides for the establishment of the margin by the Administrator; however, in no case can this margin be less than 15 percent. In view of the many different types of airplanes to which this regulation is applicable, a higher margin might be necessary in certain cases to insure safe day-to-day operations.

For reciprocating-engine-powered airplanes, the provisions of this regulation require that the applicant establish a procedure for the use of standby power for attaining the en route configuration and a safe en route speed in the event of an engine failure during the takeoff. Provisions for such procedures are contained in the regulations for turbine-powered airplanes and will therefore be applicable to such airplanes. The establishment of the procedures made applicable to reciprocating-engine-powered airplanes is left to the discretion of the applicant to select the altitude at which the acceleration is to take place, the basic limitation being that the slope along all points of the airborne portion of the takeoff path must be positive. This will provide for the critical operation of cleanup and acceleration during the takeoff which are not covered by the performance requirements of Part 4b and which have been cited in the past in connection with several accidents. In addition, with respect to the clearing of obstacles, the takeoff path scheduled in the Airplane Flight Manual for airplanes for which the performance requirements of Part 4b are applicable must be appropriately modified to reflect the effect of the aforementioned procedure.

The criteria for the establishment of maximum certificated takeoff weights involve two separate comparisons of takeoff paths. These comparisons must be carried out to a height of 400 feet above the takeoff surface. This minimum height is intended to be associated with a procedure where standby power is actuated within the neighborhood of

the critical engine failure speed V_1. These provisions are intended to limit the increase in maximum takeoff weight consistent with the overall level of performance currently attained with respect to the one-engine-inoperative takeoff and to limit the amount of standby power for which performance credit can be granted to insure a reasonable margin of performance for the all-engine day-to-day operations.

The provisions for the establishment of maximum certificated landing weights require only a comparison between two flight paths based on a steady climb and fixed configuration. One represents a climb path at the maximum weight previously certificated without standby power and the other a climb path at the increased weight with standby power. In addition, there is a provision which requires the establishment of procedures for the execution of balked landings and missed approaches in conjunction with the use of standby power.

A question has been raised as to whether duplicate sets of standby power units are required to obtain performance credit for both the takeoff and the approach stages of flight. It is intended by this regulation to require duplicate sets of standby power for a flight for which the use of standby power is necessary to comply with both the maximum certificated takeoff and the maximum certificated approach weight limitations. Where the use of standby power is necessary for compliance with the maximum certificated weight limitations for only one regime of flight, i.e., takeoff or approach, one set of standby power units is required.

There are also included safety criteria for the installation and operation of the standby power system.

The Board presently has under consideration a special regulation which would be applicable to nontransport category airplanes equipped with standby power.

Interested persons have been afforded an opportunity to participate in the making of this regulation (22 F.R. 10464), and due consideration has been given to all relevant matter presented.

In consideration of the foregoing, the Civil Aeronautics Board hereby makes and promulgates the following Special Civil Air Regulation, effective October 27, 1958.

Contrary performance provisions of the Civil Air Regulations notwithstanding, the Administrator may grant performance credit for the use of standby power on transport category airplanes. Such credit shall be applicable only to the maximum certificated takeoff and landing weights, the takeoff distance, and the takeoff paths, and shall not exceed that found by the Administrator to result in an overall level of safety in the takeoff, approach, and landing regimes of flight equivalent to that prescribed in the regulations under which the airplane was originally certificated without standby power. (Note: Standby power is power and/or thrust obtained from rocket engines for a relatively short period and actuated only in cases of emergency.) The following provisions shall apply:

(1) *Takeoff; general.* The takeoff data prescribed in sections (2) and (3) shall be determined at all weights and altitudes, and at ambient temperatures if applicable, at which performance credit is to be applied.

(2) *Takeoff path.*

(a) The one-engine-inoperative takeoff path with standby power in use shall be determined in accordance with the performance requirements of the applicable airworthiness regulations.

(b) The one-engine-inoperative takeoff path (excluding that portion where the airplane is on or just above the takeoff surface) determined in accordance with paragraph (a) of this section shall lie above the one-engine-inoperative takeoff path without standby power at the maximum takeoff weight at which all of the applicable airworthiness requirements are met. For the purpose of this comparison, the flight path shall be considered to extend to at least a height of 400 feet above the takeoff surface.

(c) The takeoff path with all engines operating, but without the use of standby power, shall reflect a conservatively greater overall level of performance than the one-engine-inoperative takeoff path established in accordance with paragraph (a) of this section. The aforementioned margin shall be established by the Administrator to insure safe day-to-day operations, but in no case shall it be less than 15 percent. The all-engines-operating takeoff path shall be determined by a procedure consistent with that established in complying with paragraph (a) of this section.

(d) For reciprocating-engine-powered airplanes, the takeoff path to be scheduled in the Airplane Flight Manual shall represent the one-engine-inoperative takeoff path determined in accordance with paragraph (a) of this section and modified to reflect the procedure (see sec. (6)) established by the applicant for flap retraction and attainment of the en route speed. The scheduled takeoff path shall have a positive slope at all points of the airborne portion and at no point shall it lie above the takeoff path specified in paragraph (a) of this section.

(3) *Takeoff distance.* The takeoff distance shall be the horizontal distance along the one-engine-inoperative takeoff path determined in accordance with section (2)(a) from the start of the takeoff to the point where the airplane attains a height of 50 feet above the takeoff surface for reciprocating-engine-powered airplanes and a height of 35 feet above the takeoff surface for turbine-powered airplanes.

(4) *Maximum certificated takeoff weights.* The maximum certificated takeoff weights shall be determined at all altitudes, and at ambient temperatures if applicable, at which performance credit is to be applied and shall not exceed the weights established in compliance with paragraphs (a) and (b) of this section.

(a) The conditions of section (2) (b) through (d) shall be met at the maximum certificated takeoff weight.

(b) Without the use of standby power, the airplane shall meet all of the en route requirements of the applicable airworthiness regulations under which the airplane was originally certificated. In addition, turbine-powered airplanes without the use of standby power shall meet the final takeoff climb requirements prescribed in the applicable airworthiness regulations.

(5) *Maximum certificated landing weights.*

(a) The maximum certificated landing weights (one-engine-inoperative approach and all-engines-operating landing climb) shall be

determined at all altitudes, and at ambient temperatures if applicable, at which performance credit is to be applied and shall not exceed that established in compliance with the provisions of paragraph (b) of this section.

(b) The flight path, with the engines operating at the power and/or thrust appropriate to the airplane configuration and with standby power in use, shall lie above the flight path without standby power in use at the maximum weight at which all of the applicable airworthiness requirements are met. In addition, the flight paths shall comply with the provisions of subparagraphs (i) and (ii) of this paragraph.

(i) The flight paths shall be established without changing the appropriate airplane configuration.

(ii) The flight paths shall be carried out for a minimum height of 400 feet above the point where standby power is actuated.

(6) *Airplane configuration, speed, and power and/or thrust; general.* Any change in the airplane's configuration, speed, and power and/or thrust shall be made in accordance with the procedures established by the applicant for the operation of the airplane in service and shall comply with the provisions of paragraphs (a) through (c) of this section. In addition, procedures shall be established for the execution of balked landings and missed approaches.

(a) The Administrator shall find that the procedure can be consistently executed in service by crews of average skill.

(b) The procedure shall not involve methods or the use of devices which have not been proven to be safe and reliable.

(c) Allowances shall be made for such time delays in the execution of the procedures as may be reasonably expected to occur during service.

(7) *Installation and operation; standby power.* The standby power unit and its installation shall comply with the provisions of paragraphs (a) and (b) of this section.

(a) The standby power unit and its installation shall not adversely affect the safety of the airplane.

(b) The operation of the standby power unit and its control shall have proven to be safe and reliable.

Appendix H

FATIGUE EVALUATION OF FLIGHT STRUCTURE

The procedures outlined in this appendix are acceptable to the FAA for showing compliance with the fatigue evaluation requirements of Civil Air Regulation 4b.270. However, the information contained in this appendix is presented merely for guidance purposes and is not mandatory nor regulatory in nature.

Although a uniform approach to fatigue evaluation is desirable, it is recognized that in such a complex and highly controversial field, new design features and methods of fabrication, new approaches to fatigue evaluation, and new configurations may require variations and deviations from the procedures described in this appendix. Therefore, engineering judgment should be exercised for each particular application.

Experience with the application of methods of fatigue evaluation indicates that fatigue tests are essential to achieve the design objective. Even under the fail-safe method discussed in section II of this appendix, it is the general practice within industry to conduct fatigue tests for design information and guidance purposes. Fatigue tests are also useful in establishing a recommended inspection program; in assessing in the early design stages the fatigue characteristics of certain structural elements, such as major fittings, joints, typical skin units, and splices; in insuring that the anticipated service life assumed at the inception of the design can reasonably be attained; and in determining the crack propagation qualities of materials selected in specific design applications.

Section I.—FATIGUE STRENGTH EVALUATION

A. *General.* The evaluation of the flight structure under the fatigue strength evaluation method is intended to insure that a serious fatigue failure will not occur as a result of the repeated loads of variable magnitude expected in service. The evaluation usually includes the following procedures:

1. Estimating or measuring the expected loading spectrum for the structure.
2. Conducting a structural analysis including consideration of the stress concentration effects.
3. Fatigue testing the structure to cover the typical loading spectrum expected in service.
4. Determining reliable service periods by interpreting the results of the loading history, the variable load stress analyses, the fatigue tests, the service experience, and the fatigue analyses.
5. Providing inspection and maintenance instructions and guidance information to the operators to minimize the possibility of a serious fatigue failure in service.

In some instances, it may be desirable to verify the loadings used in the analyses by flight load and strain surveys.

B. *Typical loading spectrum expected in service.* The loading spectrum should be based on measured statistical data of the type derived from government and industry load history studies, and where insufficient data are available, a conservative estimate of the anticipated use of the aircraft. The principal loads to be considered in establishing a loading spectrum for the flight structure are:

1. Flight loads—gust and maneuver.
2. Ground loads—taxiing, landing impact, turning, engine runup, braking.
3. Pressurization loads.
4. Other loads—ground-air-ground cycle, vibratory.

The development of the loading spectrum requires the definition of the expected flight

plan which involves climb, cruise, descent, flight times, operational speeds and altitudes, the approximate percentage of time to be spent in each of the operating regimes, and any other pertinent effects, such as dynamic overstress and the stress decay characteristics of a flexible structure excited by turbulence.

For pressure cabins, the typical loading spectrum should include the repeated application of the normal operating pressure, and the superimposed effects of flight loads and external aerodynamic pressures. A recommended source of information in the development of a loading spectrum is the *Aircraft Fatigue Handbook, Volume I—Environmental Conditions*, published by the Aircraft Industries Association.

C. *Fatigue analysis.* Some better-known methods for structural fatigue evaluation are briefly outlined in the *Aircraft Fatigue Handbook, Volume II—Design and Analysis*, published by the Aircraft Industries Association. Experience with these methods indicates that no one method is wholly satisfactory in yielding accurate or consistently reliable results, but that in many cases they may be used as approximations in design. Any method used in the fatigue analysis should be supported by test or service experience.

D. *Components to be analyzed and tested.* In assessing the possibility of serious fatigue failure, the design should be carefully examined to determine possible points of failure in service. In this examination, consideration should be given to the results of stress analyses, static tests, strain gage surveys, tests of similar structural configurations, and service experience. Service experience has shown that special attention should be focused on the design details of important discontinuities, main attach fittings, tension joints and splices, and cutouts such as windows, doors, and other openings.

Unless it is determined from the foregoing examination that the normal operating stresses at critical regions in the structure are of such a low order that the possibility of serious fatigue damage is extremely remote, repeated load tests should be conducted on complete full-scale components such as the wing, control surfaces, and pressure cabin. In any event, it is advisable that repeated load tests be conducted on representative portions of the complete flight structure.

Test specimens for the wing and empennage should include attachment fittings, major joints, changes in section, tensile area cutouts, and discontinuities. Test specimens for a pressure fuselage should include the cockpit area; typical joints; a sufficient part of the cabin area to include typical windows, doors, and other cutouts; and the pressure bulkheads and attachments.

E. *Life determination-scatter.* The main purpose of the fatigue tests is to establish for the first and subsequent failures, the component involved and its corresponding fatigue life. If possible, the structure should be repaired after each failure until a stage is reached where further repair is impossible or further testing is considered unnecessary.

In the interpretation of fatigue test data, the effect of variability should be accounted for by an appropriate factor. Relating of such factors to the recommended service life is extremely difficult as there are a number of considerations peculiar to each design that require evaluation by the applicant. The factor will depend on the number of representative test specimens, the material, the type of specimen employed, the type of repeated load test, the load levels, and environmental conditions.

F. Replacement times. Parts should be replaced or retired at the established reliable service period unless additional data indicate that an extension of the service period is possible. Important factors in the consideration of such extensions would be:

1. *Satisfactory service experience.* Satisfactory service experience includes establishing from the history of operation of the aircraft that no significant or premature fatigue failure has occurred.
2. *Recorded load data.* Recorded load data entails instrumenting aircraft in service to obtain a representative sampling of actual loads experienced. The data measured should include airspeed, altitude, and load factor versus time; or the airspeed, altitude, and strain ranges versus time, or similar data. The data obtained by instrumenting aircraft in service should provide a basis

for correlating the estimated loading spectrum with the actual service experience.

3. *Additional analyses and tests.* If test data and analyses based on repeated load tests of additional specimens are obtained, a reevaluation of the initial scatter factor may be made.
4. *Tests of parts removed from service.* Repeated load tests of replaced parts may be utilized to reevaluate the initial scatter factor selected. The tests should closely simulate service loading conditions. Repeated load testing of parts removed from service is especially useful where recorded load data obtained in service are available, since the actual loading experienced by the part prior to replacement is known.
5. *Repair or rework of the structure.* In some cases, repair or rework of the structure may gain further service life.

G. *Type design developments and changes.* For design developments or changes involving structural configurations similar to those of a design already shown to comply with the provisions of CAR 4b.270 (a), it may be possible to evaluate the variations in critical portions of the structure on a comparative basis. Typical examples would be redesign of the wing structure for increased loads, and the introduction of different locations and/or shapes of cutouts in pressure cabins. This evaluation involves analysis of the estimated stresses of the redesigned primary structure and correlation of the analysis with the analytical and test results obtained in showing compliance of the original design with CAR 4b.270 (a).

Section II.—FAIL-SAFE STRENGTH EVALUATION

A. *General.* The fail-safe strength evaluation of the flight structure is intended to insure that should a serious fatigue failure occur, the remaining structure can withstand reasonable flight loads without excessive structural deformation. The fail-safe evaluation generally encompasses establishing the components which are to be made fail-safe, defining the loading conditions and extent of damage for which the structure is to be designed, conducting structural tests and analyses to substantiate that the design objective has been achieved, and establishing inspection programs aimed at detection of fatigue damage. Design features which may be used in attaining a fail-safe structure are:

1. Use of multipath construction and the provision of crack stoppers to limit the growth of cracks.
2. Use of composite duplicate structures so that a fatigue failure occurring in one-half of the composite member will be confined to the failed half and the remaining structure will still possess appreciable load-carrying ability.
3. Use of backup structure wherein one member carries all the load, with a second member available and capable of assuming the extra load if the primary member fails.
4. Selection of materials and stress levels that provide a controlled slow rate of crack propagation combined with high residual strength after initiation of cracks.
5. Arrangement of design details to permit easy detection of failures in all critical structural elements before the failures can become dangerous or result in appreciable strength loss, and to permit replacement or repair.

B. *Identification of principal structural elements.* Principal structural elements are those which contribute significantly to carrying flight and pressurization loads and whose failure could result in catastrophic failure of the aircraft. Typical examples of such elements are:

1. *Wing and empennage—*
   - *a.* Control surface attachment hinges and fittings.
   - *b.* Integrally stiffened plates.
   - *c.* Primary fittings.
   - *d.* Principal splices.
   - *e.* Skin or reinforcement around cutouts or discontinuities.
   - *f.* Skin-stringer combinations.
   - *g.* Spar cap.
   - *h.* Spar web.
2. *Fuselage.—*
   - *a.* Circumferential frame and adjacent skin.
   - *b.* Door frames.

c. Pilot window post.
d. Pressure bulkheads.
e. Skin and any single frame or stiffener element around a cutout.
f. Skin and/or skin splices under circumferential loads.
g. Skin and/or skin splices under fore-and-aft loads.
h. Skin around a cutout.
i. Skin and stiffener combination under fore-and-aft loads.
j. Window frames.

C. *Extent of fail-safe damage.* Each particular design should be carefully assessed to establish appropriate damage criteria. In any fatigue damage determination, when it is not possible to establish the extent of damage in terms of an "obvious partial failure," the damage should be considered in terms of the complete failure of the single element involved. Thus, an obvious partial failure can be considered to be the extent of the fail-safe damage, provided a positive determination is made that the fatigue cracks will propagate in the open; for example, cracks that occur in exterior skins and which can be detected by a visual inspection at an early stage of the crack development. In a pressurized fuselage, an obvious partial failure can be verified through the inability of the cabin to maintain operating pressure or controlled decompression after occurrence of the damage.

Typical examples of the fatigue damage which should be considered are outlined below:

1. Skin cracks emanating from the edge of structural openings or cutouts which can be readily detected by visual inspection of the area.
2. A circumferential or longitudinal skin crack in the basic fuselage structure of such a length that it can be readily detected by visual inspection of the surface area.
3. Complete severence of interior frame elements or stiffeners in addition to a visually detectable crack in the adjacent skin.
4. Failure of one element where dual construction is utilized in components such as spar caps, window posts, window or door frames, and skin structure.
5. The presence of a fatigue failure in at least the tension portion of the spar web or similar elements.
6. Failure of primary attachments, including control surface hinges and fittings.

D. *Inaccessible areas.* In cases where inaccessible or blind areas are unavoidable, emphasis should be placed on determining crack propagation and residual strength of the particular fatigue-damaged structure in order to assure continued airworthiness of the structure with reasonable inspection methods and controls by the operator. Alternative procedures would be to provide additional fatigue strength to preclude fatigue cracking in the blind element or to conduct fatigue tests of the blind areas to establish that a high service life is provided.

E. *Testing of principal structural elements.* The nature and extent of tests on complete structures and/or portions of the primary structure will depend upon previous experience with similar types of structures regarding tests of this nature and the crack propagation characteristics of the structure. Single elements or members such as stringers, spar caps, and frames should be completely severed and 1.15 times the critical fail-safe load applied after severing. In cases where definite evidence is furnished that the dynamic failure effects are not present, the 1.15 factor may be eliminated or reduced in accordance with the effects noted. Alternatively, the fail-safe loads may be applied to the structure before severing and the 1.15 factor omitted.

In the case of distributed members such as a sheet-stringer combination or an integrally stiffened tension skin, a cut may be made to represent an initial crack in the element under test. If there is no failure, the length of the cut may be increased and the fail-safe load applied until either:

1. The fail-safe damage has been simulated, or
2. The crack propagation rate decreases due to redistribution of load paths, or
3. The crack propagation stops due to a crack stopper.

The simulated cracks should be as representative as possible of actual fatigue damage. In cases where it is not practical to produce

actual fatigue cracks, damage may be simulated by cuts made with a fine saw, sharp blades, or a guillotine. In those cases where it is necessary to simulate damage at joints or fittings, bolts may be removed to simulate the failure if this condition would be representative of an actual failure.

F. *Analysis of principal structural elements.* In some instances, the fail-safe characteristics may be shown analytically. The analytical approach may be used when the structural configuration involved is essentially similar to one already verified by fail-safe tests, whether conducted on a previously approved type design, or whether conducted on other similar areas of the design currently being evaluated.

The analytical approach may also be used when conservative failures are assumed such that the failure would be detected considerably before the critical crack length is approached, and margins of safety resulting from the analysis are well in excess of the fail-safe residual static strength level. In any such analysis, the 1.15 factor should be included unless it can be shown, as indicated in section II H, that this factor is not required.

G. *Selection of a critical area.* Single principal structural elements and detail design points requiring investigation are identified under section II B. The process of actually locating where fail-safe damage should be simulated in an element, such as a wing spar chord or fuselage frame, requires use of sound engineering judgment that takes into account a variety of factors, such as:

1. Conducting an analysis to locate areas of maximum stress and low margin of safety.
2. Conducting strain gage surveys on undamaged structure to establish points of high stress concentration as well as the magnitude of such concentration.
3. Examining static test results to determine locations where execssive deformations occurred.
4. Determining from repeated load tests where failure may have initiated or where the crack propagation rate is a maximum.
5. Selecting locations in an element (such as a spar cap) where the stresses in adjacent elements (such as the spar web or wing skin) would be the maximum with the spar failed.
6. Selecting points in an element (such as a spar web or frame) wherein high stress concentrations are present in the residual structure with the web failed.
7. Assessing detail design areas which service experience records of similarly designed components indicate are prone to fatigue damage.

H. *Dynamic effects.* The dynamic magnification factor of 1.15 should be applied to all loads, including pressure cabin loads, unless fail-safe tests are preformed under load, or the dynamic effects are shown to be negligible by dynamic test data from a similar structure.

I. *Inspection.* Detection of fatigue cracks before they become dangerous is the ultimate control in insuring the fail-safe characteristics of the flight structure. Therefore, the aircraft manufacturer should provide sufficient guidance information to assist operators in establishing the frequency and extent of the repeated inspections of the critical structure.

Appendix I

ENVIRONMENTAL TEST PROCEDURES: ELECTRICAL EQUIPMENT

(Refer to CAM 4b.625-1)

A. TEST EQUIPMENT STANDARDS

1. *Test facilities.*—The apparatus used in conducting the tests described in this Appendix should be capable of producing the specified environmental conditions. The equipment under test should not occupy more than 50 percent of the volume of the test chamber. Heat sources should be disposed so that radiant heat does not fall directly on the equipment under test.

2. *Measurement tolerances.*—Allowable tolerances on test condition measurements are as follows:

(*a*) *Temperature.*—Plus or minus 4° F.
(*b*) *Altitude.*—Plus or minus 5 percent.
(*c*) *Humidity.*—Plus or minus 5 percent relative.
(*d*) *Vibration amplitude.*—Plus or minus 5 percent.
(*e*) *Vibration frequency.*—Plus or minus 2 percent.

3. *Standard room conditions.*—Room conditions for conducting the equipment functional performance check (specified in par. B1) should be as follows:

(*a*) *Temperature.*—77° plus or minus 18° F.
(*b*) *Relative humidity.*—90 percent or less.
(*c*) *Barometric pressure.*—28 to 32 inches of mercury.

4. *Temperature stabilization.* — Temperature stabilization may be checked by a temperature sensing device in good thermal contact with the largest centrally-located internal mass in the equipment under test.

B. BASIS FOR EVALUATION OF ENVIRONMENTAL TEST RESULTS

1. *Functional performance.*—Before conducting any of the tests described in Section C, the equipment should be operated under standard room conditions (refer to par. A3) and a record made of all data necessary to demonstrate satisfactory functional performance in all respects affecting safety. This record constitutes the reference performance level for equipment undergoing the environmental tests in Section C. Failure to achieve this reference performance, in any respect significant to safety, denotes failure to meet the environmental test to which the equipment was subjected.

2. *Deterioration.*—Deterioration or corrosion of any internal or external components which could in any manner prevent the continued safe operation of the equipment during its service life would constitute failure to meet the environmental test to which the equipment was subjected.

C. TEST PROCEDURES

1. *High temperature test.* The equipment should be placed within the test chamber and the internal temperature of the chamber raised to 160° F. with an internal relative humidity of not more than 5 percent. The item of equipment should be maintained at 160° F. for a period of 50 hours. While still at this temperature, the equipment should be operated and the results checked against the data obtained in paragraph B1. The temperature should then be reduced to prevailing room conditions and a visual examination conducted in accordance with paragraph B2.

2. *Low temperature tests.*—

(*a*) *Method I.*—The item of equipment should be placed within the test chamber and the chamber cooled to and maintained at a temperature of −65° F. until temperature stabilization (see par. A4) of the equipment is reached. While at this temperature,

the equipment should be operated and the results checked against the data obtained in paragraph B1.

(*b*) *Method II (alternate to Method I).*— The equipment should be placed within the test chamber and the chamber cooled to and maintained at a temperature of −80° F. for a period of 48 hours, at which time the equipment should be examined in accordance with paragraph B2. The temperature of the chamber should then be raised to −65° F. and maintained for an additional 24-hour period, or until temperature stabilization is reached (see par. A4), whichever is the longer. At the conclusion of this exposure period and while at this temperature, the equipment should be operated and the results checked against the data obtained in paragraph B1 and visually examined in accordance with paragraph B2.

3. *Temperature shock tests.*—

(*a*) *Method I.*—The equipment should be placed within a test chamber wherein a temperature of 185° F. is maintained. The equipment should be subjected to this temperature for a period of 4 hours, at the conclusion of which, and within 5 minutes, the equipment should be transferred to a chamber having an internal temperature of −40° F. The equipment should be subjected to this temperature for a period of 4 hours. This completes one cycle. The equipment may be restored to room temperature before starting the next cycle. The number of complete cycles should be three. At the conclusion of the third cycle, the equipment should be removed from the test chamber and within a period of 1 hour operated and the results checked against the data obtained in paragraph B1. A visual examination should then be completed in accordance with paragraph B2.

(*b*) *Method II (alternate to Method I).*— The equipment should be placed within the test chamber and maintained for a period of at least 1 hour or until the equipment performance stabilizes at a temperature of 77°±27° F. The chamber temperature should then be reduced to − 67° F. and maintained at this condition for at least 1 hour or until the equipment performance stabilizes. The internal temperature of the chamber should then be increased to 160° F. and maintained at this condition for at least 1 hour or until the equipment performance stabilizes. The internal temperature should then be returned to 77°±27° F. and the performance of the equipment checked against data obtained in paragraph B1.

4. *Humidity tests.*—

(*a*) *Method I.*—The equipment should be placed in the test chamber and set up to simulate installed conditions. The chamber temperature should be between 68° F. and 100° F. with uncontrolled humidity. During the first 2-hour period the temperature should be gradually raised to 160° F. The 160° F. temperature should be maintained during the next 6-hour period. During the following 16-hour period, the temperature in the chamber should be gradually reduced to between 68° F. and 100° F., which constitutes one cycle. The relative humidity throughout the cycle should be 95 percent. The cycle should be repeated a sufficient number of times to extend the total time of the test to 240 hours (10 cycles). At the conclusion of the 240-hour period, the equipment should be operated and the data checked against that obtained in paragraph B1, and a visual examination made in accordance with paragraph B2. Distilled or demineralized water having a pH value of between 6.5 and 7.5 at 77° F. should be used to obtain the desired humidity. The velocity of the air throughout the test area should not exceed 150 feet per minute.

(*b*) *Method II (alternate to Method I).*— The equipment should be placed in the

test chamber and set up to simulate installed conditions. The temperature and relative humidity in the chamber should be 120° F. and 95 percent respectively. The test conditions should be maintained for 360 hours. At the conclusion of this period, the equipment should be operated and the results checked against those obtained in paragraph B1. An examination in accordance with paragraph B2 should then be made.

5. *Altitude test.*—The equipment should be placed within the test chamber and the internal pressure of the chamber reduced to correspond to an altitude exceeding by 15 percent the maximum altitude to which the equipment would be exposed in normal service. The ambient temperature in the chamber (irrespective of test altitude) should be −65° F. The equipment should be maintained at this condition until temperature stabilized (see par. A4). While at this condition, the equipment should be operated and the results checked against those obtained in paragraph B1.

6. *Vibration tests.*—

(a) *Method I (Apply to items of equipment which mount directly on the structure of aircraft powered by reciprocating, turbojet or turbo-propeller engines and to items of equipment which mount directly on gas turbine engines).*—The test specimen should be mounted on the apparatus in a manner which is dynamically similar to the most severe condition likely to be encountered in service. The test specimen should be performing its function during the entire test period whenever practicable. At the end of the test period, the test specimen should be inspected thoroughly for damage or defects resulting from the vibration tests. The amplitude or acceleration for the frequency cycling test should be within ±10 percent of the specified values. Vibration tests should be conducted under both resonant and cycling conditions according to the following vibration test schedule (table 1):

Table 1.—VIBRATION TEST SCHEDULE

Type	Vibration at—		
	Room temp.	160° F.	−65° F.
	(*Minutes*)	(*Minutes*)	(*Minutes*)
Resonance	60	15	15
Cycling	60	15	15

NOTE: Times shown refer to one axis of vibration.

(i) *Resonance.*—Resonant frequencies of the test specimen should be determined by varying the frequency of applied vibration slowly through the specified range of frequencies at vibratory accelerations not exceeding those shown in figure 1. Individual resonant frequency surveys should be conducted with vibration applied along each of any set of three mutually perpendicular axes of the test specimen. Whenever practicable, functioning of the test specimen should be checked (against the data obtained in par. B1) concurrently with the operation of scanning the frequency range for resonant frequencies. The test specimen should be vibrated at the indicated resonant conditions for the periods shown in the vibration test schedule (table 1) and with the applied double amplitude or vibratory acceleration specified in figure 1. These periods of vibration should be accomplished with vibration applied along each of three mutually perpendicular axes of vibration. When more than one resonant frequency is encountered with vibration applied along any one axis, the test period may be accomplished at the most severe resonance or the period may be divided among

the resonant frequencies, whichever is considered most likely to produce failure. However, in no instance should the specimen be vibrated on any resonant mode for periods less than half as long as those shown for resonance in the vibration test schedule. When resonant frequencies are not apparent within the specified frequency range, the specimen should be vibrated for periods twice as long as those shown for resonance in the vibration test schedule (table 1) at a frequency of 55 cps. and an applied double amplitude of 0.060 inch.

(ii) *Cycling.*—For test specimens mounted on vibration isolators, a vibration test should be conducted with a constant applied double amplitude of 0.060 inch and the frequency cycling between 10 and 55 cps. in 1-minute cycles. Vibration should be applied along each of three mutually perpendicular axes according to the vibration test schedule (table 1). For specimens which are to be installed in aircraft without vibration isolators, a vibration test should be conducted with the frequency cycling between 10 and 500 cps. in 15-minute cycles at an applied double amplitude of 0.036 inch or an applied acceleration of ± 10g, whichever is the limiting value. Vibration should be applied along each of three mutually perpendicular axes according to the vibration test schedule (table 1).

(*b*) *Method II* (*Apply to items of equipment which mount directly to reciprocating engines*).—The test specimen should be mounted on the apparatus in a position dynamically similar to the most severe mounting likely to be used in service. Resonant frequencies of the test specimen should be determined by varying the frequency of applied vibration slowly through the specified frequency range at vibratory accelerations not exceeding those shown in figure 1. Individual resonant frequency surveys should be conducted with vibration applied along each of any set of three perpendicular axes of the test specimen. Whenever practicable, the functioning of the test specimen should be checked (against the data obtained in par. B1) concurrently with the operation of scanning the frequency range for resonant frequencies. If resonant frequencies are encountered, the test specimen should be vibrated successively along each of three mutually perpendicular axes for 4 hours at the resonant conditions with the applied double amplitude or vibratory acceleration shown in figure 1. When more than one resonant frequency is encountered with vibration applied along any one axis, the test period may be carried out at the most severe resonance, or the period may be divided uniformly among the resonant frequencies, whichever procedure is considered most likely to produce failure. When clearly defined resonant frequencies are not encountered within the specified frequency range, the test specimen should be vibrated for 12 hours along each of its mutually perpendicular axes at an applied double amplitude of 0.018 inch and a frequency of 150 cycles per second. The test specimen should be performing its function during the entire test period whenever practicable. At the end of the test period the test specimen should be inspected thoroughly for damage or defects resulting from the vibration tests.

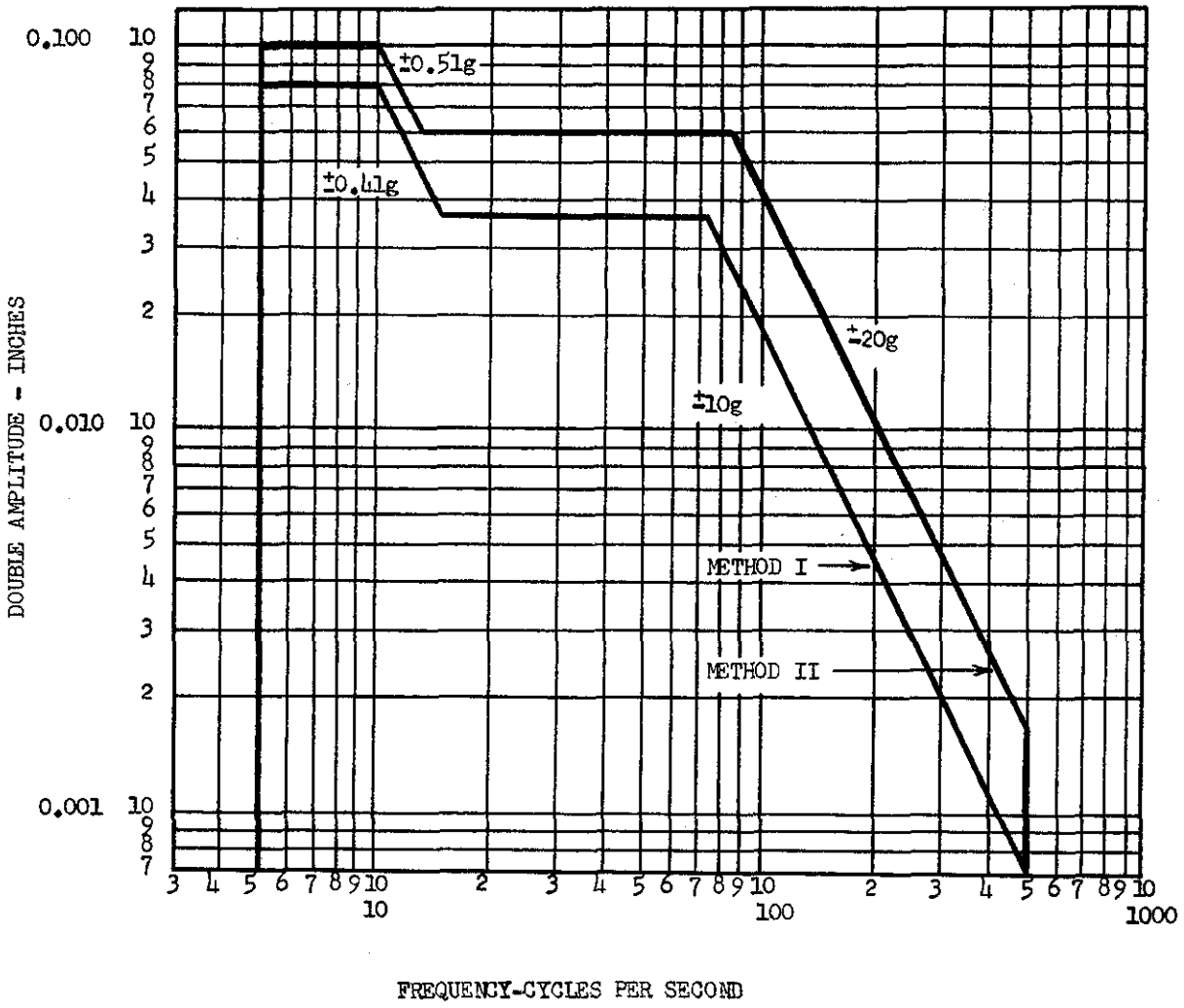

Figure 1.—Range curves for vibration tests.

7. *Fungus resistance test.*—Five groups of fungi are listed below, and one species of fungus from each group should be used. In the preparation of the spore suspension, distilled water having a pH value between 5.8 and 7.2 at temperatures between 72° F. and 89° F. should be used. Approximately 10 ml. of distilled water should then be introduced directly into a tube culture of the fungus and the spores brought into suspension by vigorous shaking or by gentle rubbing of the spore layer with an inoculating loop without disturbing the agar surface. This process is repeated for each species of fungus. The separate spore suspensions from the five species of fungi should be mixed together to provide a composite suspension. Actively sporulating cultures between 7 and 21 days old after initial inoculation should be used for the preparation of the spore suspension. After preparation the spore suspension should not be kept for more than a 24-hour period at temperatures between 72° F. and 89° F. and not more than 48 hours at refrigerator temperatures of 35° F. to 45° F. The equipment, including applicable external connections, should be placed in a chamber maintaining an internal temperature of 86° ± 3.6° F. and a relative humidity of 95±5 percent, and sprayed with the suspension of mixed spores. The test period should be 28 days. At

the end of the test period the test item should be examined visually in accordance with paragraph B2.

(*a*) *Organisms.*—

Group I— *Chaetomium globosum* USDA 1042.4 or *Myrothecium verrucaria* USDA 1334.2

Group II— *Rhizopus nigricans* S. N. 32 or *Aspergillus niger* USDA Tc215–4247

Group III—*Aspergillus flavus* WADC No. 26 or *Aspergillus terreus* PQMD 82J

Group IV—*Penicillium luteum* USDA 1336.1, *Penicillium sp.* USDA 1336.2, or *Penicillium citrinum* ATCC 9849

Group V— *Memnoniella echinata* WADC No. 37 or *Fusarium moniliforme* USDA 1004.1

(*b*) *Stock culture designations and sources.*—

Symbols	*Source*
USDA	U. S. Dept. of Agriculture, Beltsville, Md.
ATCC	American Type Culture Collection, 2029 M Street, NW., Washington 6, D. C.
PQMD	Philadelphia Q. M. Depot, 2800 South 20th Street, Philadelphia, Pa.
WADC	Wright Air Development Center, Materials Laboratory, Wright-Patterson Air Force Base, Ohio.
S.N.	Dr. W. B. Weston, Biological Laboratories, Harvard University, Cambridge, Mass.

8. *Salt spray test.*—

(*a*) *Apparatus.*—Apparatus used in the salt spray test should include the following:

(i) Exposure chamber with racks for supporting specimens.

(ii) Salt solution reservoir.

(iii) Means for atomizing salt solution, including suitable nozzles and compressed air supply.

(iv) Chamber heating means and control.

(v) Means for humidifying the compressed air at a temperature above the chamber temperature.

(*b*) *Chamber.*—The chamber and all accessories should be made of material which will not affect the corrosiveness of the fog, such as glass, hard rubber, plastic, or wood other than plywood. In addition, all parts which come in contact with test items should be of materials that will not cause electrolytic corrosion. The chamber and accessories should be so constructed and arranged that there is no direct impinging of the spray or dripping of the condensate on the test items, that the spray circulates freely about all items to the same degree and that no liquid which has come in contact with the test specimens returns to the salt solution reservoir. The chamber should be properly vented.

(*c*) *Atomizers.*—The atomizers used should be of such design and construction as to produce a finely divided, wet, dense fog.

(*d*) *Air supply.*—The compressed air entering the atomizers should be free from all impurities such as oil and dirt. Means should be provided to humidify and warm the compressed air as required to meet the operating conditions. The air pressure should be suitable to produce a finely divided dense fog with the atomizer or atomizers used. To insure against clogging the atomizers by salt deposition, the air should have a relative humidity of

at least 85 percent at the point of release from the nozzle. A satisfactory method is to pass the air in very fine bubbles through a tower containing heated water. The temperature of the water should be 95° F. and often higher. The permissible temperature increases with increasing volume of air and with decreasing heat insulation of the chamber and temperature of its surroundings. It should not exceed a value above which an excess of moisture is introduced into the chamber (for example, 109° F. at an air pressure of 12 psi) or a value which makes it impossible to meet the requirement for operating temperature.

(e) *Salt solution.* The salt used should be sodium chloride containing on the dry basis not more than 0.1 percent of sodium iodide and not more than 0.2 percent of total impurities. The solution should be prepared by dissolving 20 ± 2 parts by weight of salt in 80 parts by weight of distilled or other water containing not more than 200 parts per million of total solids. The solution should be kept free from solids by filtration or decantation. The solution should be adjusted to and maintained at a specific gravity of from 1.126 to 1.157 and at a pH of between 6.5 to 7.2 when measured at a temperature between 92° F. and 97° F. Only C. P. hydrochloric acid or C. P. sodium hydroxide should be used to adjust the pH. The pH measurement should be made electrometrically using a glass electrode with a saturated potassium chloride bridge or by a colorimetric method such as bromothynol blue provided the results are equivalent to those obtained with the electrometric method.

(f) *Operating conditions.*—

(i) *Temperature.*—The test should be conducted with a temperature in the exposure zone maintained at 95° F. Satisfactory methods for controlling the temperature accurately are by housing the apparatus in a properly controlled constant-temperature room, by thoroughly insulating the apparatus and preheating the air to the proper temperature prior to atomization and by jacketing the apparatus and controlling the temperature of the water or of the air used. Immersion heaters should not be used to maintain the temperature within the chamber.

(ii) *Atomization.*—The conditions maintained in all parts of the exposure zone should be such that a suitable receptacle placed at any point in the exposure zone will collect from 0.5 to 3 ml. of solution per hour for each 30 sq. cm. of horizontal collecting area (10 cm. diameter) based on an average of at least 16 hours. The solution thus collected shall have a sodium chloride content of from 18 to 22 percent (specific gravity of from 1.126 to 1.157 when measured at a temperature between 91.4 and 96.8° F.). At least two clean fog collecting receptacles should be used, one placed nearest to any nozzle and one farthest from all nozzles. Receptacles should be fastened so that they are not shielded by specimens and so that no drops of solution from specimens or other sources will be collected. When using nozzles made of material nonreactive to the salt solution, suitable atomization has been obtained in boxes having a volume of less than 12 cubic feet with the following conditions: Nozzle pressure between 12 and 18 pounds per square inch; orifices between 0.02 and 0.03

inch in diameter; atomization of approximately 3 quarts of the salt solution per 10 cubic feet of box volume per 24 hours. When using large size boxes having a volume considerably in excess of 12 cubic feet, these conditions may have to be modified to meet the requirements for operating conditions.

(iii) *Preparation of equipment.*—The equipment should be mounted in the chamber and electrical and mechanical connections completed where operation is required during the test period. Access covers and inspection plates should be in place except when such covers would normally be removed for service use. When operation is not required, external connections may be plugged to simulate actual service conditions.

(*g*) *Conclusion.*—The length of the salt spray test should be not less than 50 hours. At the end of the test period, the equipment should be operated and the results checked against the data obtained in paragraph B1. Salt deposits resulting from the test conditions may be removed prior to operation. A visual examination should be conducted in accordance with paragraph B2.

9. *Sand and dust tests.*—The equipment should be placed within the test chamber and the sand and dust density raised and maintained at 0.1 to 0.5 grams per cubic foot within the test space. The relative humidity should not exceed 30 percent at any time during the test. Sand and dust used in the test should be of angular structure and should have characteristics as follows:

(*a*) 100 percent of the sand and dust should pass through a 100-mesh screen, U. S. Standard Sieve Series.

(*b*) 98 ± 2 percent of the sand and dust should pass through a 140-mesh screen, U. S. Standard Sieve Series.

(*c*) 90 ± 2 percent of the sand and dust should pass through a 200-mesh screen, U. S. Standard Sieve Series.

(*d*) 75 ± 2 percent of the sand and dust should pass through a 325-mesh screen, U. S. Standard Sieve Series.

(*e*) Chemical analysis of the dust should be as follows:

Substance	*Percent by Weight*
SiO_2	97 to 99
Fe_2O_3	0 to 2
Al_2O_3	0 to 1
TiO_2	0 to 2
MgO	0 to 1
Ign Losses	0 to 2

The internal temperature of the test chamber should be maintained at 77° F. for a period of 6 hours with sand and dust velocity through the test chamber between 100 and 500 feet per minute. After 6 hours at these conditions, the temperature should be raised to and maintained at 160° F. These conditions should be maintained for 6 hours. At the end of this test period, the equipment should be removed and allowed to cool to room temperature. When cooled to room temperature, the equipment should be operated and the results checked against those obtained in paragraph B1. An examination in accordance with paragraph B2 should be conducted.

10. *Shock test.*—The equipment should be subjected to the shock conditions as normally used in service, including any shock mount assembly. A shock testing machine conforming to Military Specification MIL–S–4456 is suitable for this test.

The test specimen should be subjected to 18 impact shocks of 10g, each shock impulse having a time duration of 11 ± 1 milliseconds. The intensity should be within ± 10 percent when measured with a filter having a band width of 5 to 100 cycles per second. The maximum g should be reached in approximately 5½ milliseconds. The shock should be applied in the following directions:

(*a*) Vertically, 3 shocks in each direction.
(*b*) Parallel to the major horizontal axis, 3 shocks in each direction.
(*c*) Parallel to the minor horizontal axis, 3 shocks in each direction.

The test specimen should not suffer damage.

The equipment should be operated and the results checked against those obtained in paragraph B1. An examination in accordance with paragraph B2 should be conducted.

11. *Acceleration test.*—The test specimen should be mounted on the apparatus (centrifuge) successively in three positions so that each of the three major axes of the test specimen in turn extend in a radial direction with respect to the centrifuge center of rotation. A 15g acceleration should be attained, stabilized, and maintained for a period of not less than one minute for each position. Functional tests should be conducted during application of the acceleration to assure that safe performance (refer to par. B1) of the equipment is obtained. There should be no mechanical failures or malfunctions due to the applied acceleration.

U. S. GOVERNMENT PRINTING OFFICE: 1960 O—542115