CIVIL AERONAUTICS BOARD

WASHINGTON, D. C.

CIVIL AIR REGULATIONS

# PART 04—AIRPLANE AIRWORTHINESS

As Amended to August 15, 1942.

UNITED STATES
GOVERNMENT PRINTING OFFICE
WASHINGTON : 1942

For sale by the Superintendent of Documents, Washington, D. C. - - - - - - - - - - - - - - - Price 15 cents

# CIVIL AIR REGULATIONS

## PART 04—AIRPLANE AIRWORTHINESS


| | Page |
|---|---|
| 04.0 **General** | 2 |
| 04.00 Scope | 2 |
| 04.01 Airplane categories | 2 |
| 04.02 Airworthiness certificate | 2 |
| 04.03 Data required | 2 |
| 04.04 Inspection and tests | 2 |
| 04.05 Procedure for type certification | 2 |
| 04.06 Changes | 2 |
| 04.1 **Definitions** | 3 |
| 04.2 **Structural Loading Conditions** | 5 |
| 04.20 General structural requirements | 5 |
| 04.21 Flight loads | 5 |
| 04.22 Control surface loads | 8 |
| 04.23 Control system loads | 10 |
| 04.24 Ground loads | 11 |
| 04.25 Water loads | 12 |
| 04.26 Special loading conditions | 15 |
| 04.27 Multiplying factors of safety | 16 |
| 04.3 **Proof of Structure** | 17 |
| 04.30 General | 17 |
| 04.31 Proof of wings | 18 |
| 04.32 Proof of tail and control surfaces | 19 |
| 04.33 Proof of control systems | 19 |
| 04.34 Proof of landing gear | 20 |
| 04.35 Proof of hulls and floats | 20 |
| 04.36 Proof of fuselages and engine mounts | 20 |
| 04.37 Proof of fittings and parts | 20 |
| 04.4 **Detail Design and Construction** | 20 |
| 04.40 General | 20 |
| 04.41 Detail design of wings | 22 |
| 04.42 Detail design of tail and control surfaces | 23 |
| 04.43 Detail design of control systems | 23 |
| 04.44 Detail design of landing gear | 24 |
| 04.45 Hulls and floats | 25 |
| 04.46 Fuselage and cabins | 26 |
| 04.5 **Equipment** | 28 |
| 04.50 General | 28 |
| 04.51 Non-air-carrier (NAC) airplanes | 28 |
| 04.52 Air carrier airplanes—Goods (ACG) | 29 |
| 04.53 Air carrier airplanes—Passengers (ACP) | 29 |
| 04.54 (Unassigned) | 30 |
| 04.55 (Unassigned) | 31 |
| 04.56 (Unassigned) | 31 |
| 04.57 (Unassigned) | 31 |
| 04.58 Installation requirements | 31 |
| 04.6 **Powerplant Installation** | 33 |
| 04.60 Engines | 33 |
| 04.61 Propellers | 33 |
| 04.62 Fuel systems | 33 |
| 04.63 Lubrication systems | 33 |
| 04.64 Cooling systems | 35 |

| 04.6 **Powerplant Installation**—Continued. | Page |
|---|---|
| 04.65 Powerplant instruments, controls and accessories | 35 |
| 04.66 Manifolding, cowling and firewall | 36 |
| 04.67 (Unassigned) | 36 |
| 04.68 (Unassigned) | 36 |
| 04.69 Miscellaneous powerplant requirements | 36 |
| 04.7 **Performance** | 37 |
| 04.70 Performance requirements | 37 |
| 04.71 Modified performance requirements for air carrier airplanes not certificated in the transport category | 38 |
| 04.72 Performance tests | 39 |
| 04.73 Performance characteristics of air carrier aircraft | 40 |
| 04.74 Operation limitations | 40 |
| 04.75-T Performance requirements for transport category airplanes | 41 |
| 04.8 (Unassigned) | 46 |
| 04.9 **Miscellaneous Requirements** | 46 |
| 04.90 Standard weights | 46 |
| 04.91 Leveling means | 46 |
| **Tables:** | |
| Table 04–1 Symmetrical flight conditions (flaps retracted) | 46 |
| Table 04–2 Symmetrical flight conditions (flaps extended) | 46 |
| Table 04–3 Loading conditions for horizontal tail surfaces | 47 |
| Table 04–4 Loading conditions for vertical tail surfaces | 47 |
| Table 04–5 Loading conditions for ailerons | 47 |
| Table 04–6 Loading conditions for control systems | 47 |
| Table 04–7 Additional (multiplying) factors of safety | 48 |
| **Figures:** | |
| Fig. 04–1 Gliding speed factor | 49 |
| Fig. 04–2 Pull-up speed factor | 49 |
| Fig. 04–3 Maneuvering load factor increment, Conditions I and II | 50 |
| Fig. 04–4 "Balancing" distribution—horizontal tail | 51 |
| Fig. 04–5 "Maneuvering" tail load distribution | 51 |
| Fig. 04–6 "Damping" tail load distribution | 51 |
| Fig. 04–7 Aileron load distribution | 51 |
| Fig. 04–8 Elevator control force limits | 52 |
| Fig. 04–9 Aileron control force limits | 52 |
| Fig. 04–10 Limit load factors for level and 3-point landing conditions | 53 |
| Fig. 04–11 Distribution of local pressures—boat seaplanes | 54 |

## 04.0 GENERAL

**04.00 Scope.** The airworthiness requirements set forth in this Part shall be used as a basis for obtaining airworthiness or type certificates: *Provided,* That (1) deviations from these requirements which, in the opinion of the Administrator, insure the equivalent condition for safe operation and, (2) equivalent requirements of the United States Army or Navy with respect to airworthiness, may be accepted in lieu of the requirements set forth in this Part. Unless otherwise specified an amendment to this Part will apply only to airplanes for which applications for type certificates are received subsequent to the effective date of such amendment.

**04.01 Airplane categories.** At the election of the applicant, an airplane may be certificated under the requirements for a particular category according to the intended use of the airplane. Sections of this part which affect only one particular category are designated by a suffix added to the appropriate section numbers, as follows:

| | |
|---|---|
| Normal Category | Suffix "N" |
| Transport Category | Suffix "T" |
| Acrobatic Category | Suffix "A" |

All sections not designated by a suffix are applicable to all categories, except as otherwise specified.

**04.02 Airworthiness certificate.** The airworthiness requirements specified hereinafter shall be used as a basis for the certification of airplanes: *Provided,* That an airplane manufactured in accordance with, and conforming to, the currently effective aircraft specifications issued therefor, will be eligible for an airworthiness certificate if the Administrator determines such airplane is in condition for safe operation: *Provided, further,* That an airplane which has not demonstrated compliance with the airworthiness requirements specified hereinafter but which, in the opinion of the Administrator, is in condition for safe operation for experimental purposes or for particular activities, will be eligible for an airworthiness certificate.

**04.03 Data required.**

**04.030** (Unassigned.)

**04.031 Data required for airworthiness certificate.** When an airworthiness certificate is sought and a type certificate is not involved, data which are adequate to establish compliance of the aircraft with the requirements listed hereinafter shall be submitted to the Administrator.

**04.032 Data required for type certificate.** Data which are adequate to establish compliance of the aircraft with the airworthiness requirements listed hereinafter and which are adequate for the reproduction of other airplanes of the same type shall be submitted to the Administrator. The procedure for submitting the required data, the technical contents of such data, and the methods of testing aircraft with respect to the prescribed airworthiness requirements shall be in accordance with Civil Aeronautics Manual 04. Airplane Airworthiness.

**04.04 Inspection and tests.** Authorized representatives of the Administrator shall have access to the airplane and may witness or conduct such inspections and tests as are deemed necessary by the Administrator. Prior to, or at the time of, presentation of the airplane for official flight tests, the applicant for an airworthiness or type certificate shall submit to the Administrator a detailed report of pertinent flight tests conducted, and satisfactory proof of conformity of the airplane with the technical data submitted to the Administrator.

**04.05 Procedure for type certification.** Acceptable procedures for type certification are outlined in Civil Aeronautics Manual 04.

**04.06 Changes.** Changes to certificated aircraft shall be substantiated to demonstrate continued compliance of the aircraft with the pertinent airworthiness requirements.

**04.060 Minor changes.** Minor changes to airplanes being manufactured under the terms of a type certificate and which obviously do not impair the condition of the airplane for safe operation may be approved by authorized representatives of the Administrator prior to submittal to the Administrator of any required revised drawings. The approval of such minor changes shall be based on the airworthiness requirements in effect when the particular airplane model was originally certificated, unless, in the opinion of the Administrator, compliance with current airworthiness requirements is necessary.

**04.061 Major changes.** Major changes to airplanes being manufactured under the terms of a type certificate may require the issuance of a new type certificate and the Administrator may, in his discretion, require such changes to comply with current airworthiness requirements.

**04.062 Changes required by the Administrator.** In the case of aircraft models approved under the airworthiness requirements in effect prior to the currently effective regulations, the Administrator may require that aircraft submitted for original airworthiness certification comply with such portions of the currently effective regulations as are considered necessary.

## 04.1 DEFINITIONS

**04.100 *Weight, W.*** *The total weight of the airplane and its contents.*

**04.101 Design weight.** The weight of the airplane assumed for purposes of showing compliance with the structural requirements hereinafter specified.

**04.1010 Minimum design weight.** Weight empty with standard equipment, plus crew, plus fuel of 0.25 lb. per maximum (except take-off) horsepower, plus oil as per capacity.

**04.102 Standard weight.** The maximum weight for which the airplane is certificated as complying with all the airworthiness requirements for normal operations.

**04.103 Provisional weight.** The maximum weight for which the airplane is certificated as complying with the airworthiness requirements as modified for scheduled air carriers in § 04.71.

**04.104 Design wing area, *S*.** The area enclosed by the projection of the wing outline, including ailerons and flaps but ignoring fairings and fillets, on a surface containing the wing chords. The outline is assumed to extend through nacelles and through the fuselage to the plane of symmetry.

**04.105 Design Power, *P*.** The total engine horsepower chosen for use in determining the maneuvering load factors. The corresponding engine output will be incorporated in the aircraft certificate as a maximum operational limitation in all flight operations other than take-off or climbing flight. (See § 04.744.)

**04.106 Design wing loading, *W*/S.** The design weight (§ 04.101) divided by the design wing area (§ 04.104).

**04.107 Design power loading, *W*/P.** The design weight (§ 04.101) divided by the design power. (See § 04.105 and Figure 04–3.)

**04.108 Air density $\rho$.** The mass density of the air through which the airplane is moving, in terms of the weight of a unit volume of air divided by the acceleration of gravity. The symbol $\rho_o$ denotes the mass density of air at sea level under standard atmospheric conditions and has the value of 0.002378 slugs per cubic foot. (See § 04.130 for definition of standard atmosphere.)

**04.109 True airspeed $V_t$.** The velocity of the airplane, along its flight path, with respect to the body of air through which the airplane is moving.

**04.110 Indicated airspeed, *V*.** The true airspeed multiplied by the term $\sqrt{\rho/\rho_o}$. (See § 04.108.)

**04.111 Design level speed, $V_L$.** The indicated airspeed chosen for use in determining the pertinent structural loading conditions. This value will be incorporated in the aircraft certificate as a maximum operational limitation in level and climbing flight. (See § 04.743.)

**04.112 Design gliding speed, $V_g$.** The maximum indicated airspeed to be used in determining the pertinent structural loading conditions. (See §§ 04.211 and 04.743.)

**04.113 Design stalling speed, $V_s$.** The computed indicated airspeed in unaccelerated flight based on the maximum lift coefficient of the wing and the design gross weight. The effects of slipstreams and nacelles shall be neglected in computing $V_s$. When high-lift devices are in operation the corresponding stalling speed will be denoted by $V_{sf}$.

**04.114 Design flap speed, $V_f$.** The indicated airspeed at which maximum operation of high-lift devices is assumed. (See §§ 04.211 and 04.743.)

**04.115 Maximum vertical speed, $V_m$.** A fictitious value of indicated airspeed computed for unaccelerated flight in a vertical dive with zero propeller thrust.

**04.116 Design maneuvering speed, $V_p$.** The indicated airspeed at which maximum operation of the control surfaces is assumed. (See § 04.211.)

**04.117 Design gust velocity, $U$.** A specific gust velocity assumed to act normal to the flight path. (See § 04.2121.)

**04.118 Dynamic pressure, $q$.** The kinetic energy of a unit volume of air.

$q = \frac{1}{2}\rho V_t^2$ (in terms of true airspeed).

$= \frac{1}{2}\rho_o V^2$ (in terms of indicated airspeed).

$= V^2/391$ pounds per square foot, when $V$ is miles per hour indicated airspeed.

(See § 04.108 for definition of $\rho$.)

**04.119 Load factor or acceleration factor, $n$.** The ratio of a load to the design weight. When the load in question represents the net external load acting on the airplane in a given direction, $n$ represents the acceleration factor in that direction.

**04.120 Limit load.** A load (or load factor, or pressure) which it is assumed or known may be safely experienced but will not be exceeded in operation.

**04.121 Factor of safety, $j$.** A factor by which the *limit* loads are multiplied for various design purposes.

**04.122 Ultimate factor of safety, $j_u$.** A specified factor of safety used in determining the maximum load which the airplane structure is required to support.

**04.123 Yield factor of safety, $j_y$.** A specified factor of safety used in connection with the prevention of permanent deformations.

**04.124 Ultimate load.** *A limit* load multiplied by the specified *ultimate* factor (or factors) of safety. See above definitions and § 04.200.

**04.125 Yield load.** *A limit* load multiplied by the specified *yield* factor (or factors) of safety. (See above definitions and § 04.201.)

**04.126 Strength test.** A static load test in which the *ultimate* loads are properly applied. (See § 04.200 and § 04.3021.)

**04.127 Proof test.** A static load test in which the *yield* loads are properly applied for a period of at least one minute. (See § 04.201.)

**04.128 Balancing loads.** Loads by which the airplane is placed in a state of equilibrium under the action of external forces resulting from specified loading conditions. The state of equilibrium thus obtained may be either real or fictitious. Balancing loads may represent air loads, inertia loads, or both. (See § 04.2210.)

**04.129 Aerodynamic coefficients, *CL, CM, CP*, etc.** The coefficients hereinafter specified are those of the "absolute" (nondimensional) system adopted as standard in the United States. The subscripts $N$ and $C$ used hereinafter refer respectively to directions normal to and parallel with the basic chord of the airfoil section. Other subscripts have the usual significance. When applied to an entire wing or surface, the coefficients represent average values and shall be properly correlated with local conditions (load distribution) as required in § 04.217.

**04.130 Standard atmosphere (standard air).** Standard atmosphere refers to that variation of air conditions with altitude which has been adopted as standard in the United States. (See any aeronautics text book or handbook, or NACA Technical Report No. 218.)

**04.131 Primary structure.** Those portions of the airplane, the failure of which would seriously endanger the safety of the airplane.

## 04.2 STRUCTURAL LOADING CONDITIONS

### 04.20 General structural requirements.

**04.200 Strength.** The primary structure (see § 04.131) shall be capable of supporting the *ultimate* loads (see § 04.124) determined by the loading conditions and *ultimate* factors of safety hereinafter specified, the loads being properly distributed and applied.

**04.201 Deformations.** The primary structure shall be capable of supporting without detrimental permanent deformations, for a period of at least one minute, the *yield* loads (see § 04.125) determined by the loading conditions and *yield* factors of safety hereinafter specified, the loads being properly distributed and applied. Where no *yield* factor of safety is specified a factor of 1.0 shall be assumed. In addition, temporary deformations which occur before the yield load is reached shall be of such a nature that their repeated occurrence will not weaken or damage the primary structure.

**04.202 Stiffness.** The primary structure shall be capable of supporting the *limit* loads (see § 04.120) determined by the loading conditions hereinafter specified without deflecting beyond whatever limits may be hereinafter prescribed or which may be deemed necessary by the Administrator for the case in question.

**04.203 Proof of strength and rigidity.** No general requirements, but see § 04.3 for specific requirements.

**04.204 Materials, fabrication, protection, etc.** No general requirements, but see § 04.4 for specific requirements.

### 04.21 Flight loads.

**04.210 General.** The airworthiness rating of an airplane with respect to its strength under flight loads will be based on the airspeeds and accelerations (from maneuvering or gusts) which can safely be developed in combination. For certain classes of airplanes the acceleration factors and gust velocities are arbitrarily specified hereinafter and shall be used for those classes. The airspeeds which can safely be developed in combination with the specified acceleration factors and gusts shall be determined in accordance with the procedure hereinafter specified and shall serve as a basis for restricting the operation of the airplane in flight. (See § 04.743.)

**04.211 Airspeeds.** (See §§ 04.109 to 04.116 for definitions.) The design airspeeds shall be determined as follows:

$V_L$ (See § 04.111)

$V_g$ shall not be less than $V_L+K_g(V_m-V_L)$, except that it need not be greater than either $V_L+100$ miles per hour or 1.5 $V_L$, whichever is lower. $K_g$ is specified on Fig. 04–1. $V_m$ is defined in § 04.115. A special ruling may be obtained from the Administrator if the design gliding speed thus determined is greater than 1.33 $V_L$ and appears to be unnecessarily high for the type of airplane involved.

$V_f$ shall not be less than $2V_{sf}$. $V_{sf}$ is defined in § 04.113.

$V_p$ shall not be less than $V_{sf}+K_p(V_L-V_{sf})$, except that it need not be greater than $V_L$. $K_p$ is specified in Fig. 04–2. (See §§ 04.2220, 04.2223 and 04.2230 for exceptions for multi-engine airplanes.)

**04.212 Load factors.** The flight load factors specified hereinafter shall represent *wing* load factors. The *net* load factor, or acceleration factor, shall be obtained by proper consideration of balancing loads acting on the airplane in the specific flight conditions.

**04.2120 Maneuvering load factors.** The limit maneuvering load factors specified hereinafter (see Fig. 04–3) are derived largely from experience with conventional types of airplanes and shall be considered as minimum values unless it can be proved, to the satisfaction of the Administrator, that the airplane embodies features of design which make it impossible to develop such values in flight, in which case lower values may be used subject to the approval of the Administrator

**04.2121 Gust load factor.** The gust load factors shall be computed on the basis of a gust of the magnitude specified, acting normal to the flight path, and proper allowance shall be made for the effects of aspect ratio on the slope of the lift curve. The gust velocities specified

shall be used only in conjunction with the gust formulae specified in Civil Aeronautics Manual 04.2121.

**04.2122 Factors of safety.** The minimum factors of safety are specified for each loading condition. See also § 04.27 for multiplying factors of safety required in certain cases.

**04.213 Symmetrical flight conditions (flaps retracted).**

**04.2130 General.** The following flight conditions, together with Table 04–1, shall be considered as representing the minimum number of conditions required to cover a suitable range of symmetrical flight loadings.

**04.2131 Condition I positive high angle of attack.** The factors given in Table 04–1 and Fig. 04–3 for this condition shall be used. To provide for flight conditions critical for the front lift truss or its equivalent the aerodynamic characteristics $C_N$, $CP$ (or $C_M$), and $C_c$ shall be determined as follows:

(*a*) $C_{N_I}=\frac{n_I(W/S)}{q_L}$ ($q_L$ is dynamic pressure corresponding to $V_L$; see §§ 04.111 and 04.118.)

(*b*) $C_c'$=value corresponding to $C_{N_I}$, or value equal to $-.20\ C_{N_I}$, whichever is greater negatively.

(*c*) $CP'$=most forward position of the center of pressure between $C_L-C_{N_I}$ and $C_L$ max.; when $C_{N_I}$ exceeds $C_L$ max., the $CP$ curve shall be extended accordingly.

(*d*) For biplane combinations the $CP$ of the upper wing shall be assumed to be 2.5 percent of the chord forward of its nominal position.

(*e*) $C_M'$=moment coefficient necessary to give the required $CP'$ in conjunction with $C_{N_I}$.

**04.21310 Condition $I_1$ (positive high angle of attack modified).** The smaller of the two values of $C_c$ specified in § 04.2131 (*b*), and the most rearward $CP$ position in the range specified in § 04.2131 (*c*) shall also be investigated when Condition *I* is critical for the rear spar (or its equivalent) or if any portion of the front spar (or its equivalent) is likely to be critical in tension. Only the wings and wing bracing need be investigated for this condition.

**04.2132 Condition *II* (negative high angle of attack).** The factors given in Table 04–1 for this condition shall be used, with the following provisions:

(*a*) $C_{N_{II}}=\frac{n_{II}(W/S)}{q_L}$.

(*b*) $C_c$=actual value corresponding to $C_{N_{II}}$.

(*c*) When $C_c$ is positive or has a negative value smaller than 0.02, it may be assumed to be zero.

(*d*) $C_M$=actual value corresponding to $C_{N_{II}}$.

**04.2133 Condition *III* (positive low angle of attack).** The factors given in Table 04–1 for this condition shall be used, with the following provisions:

(*a*) $C_{N_{III}}=\frac{n_{III}(W/S)}{q_g}$ ($q_g$ is dynamic pressure corresponding to $V_g$; see § § 04.118 and 04.112).

(*b*) $C_c$=actual value corresponding to $C_{N_{III}}$.

(*c*) When $C_c$ is positive or has a negative value smaller than 0.02, it may be assumed to be zero.

(*d*) $C_M$=actual value corresponding to $C_{N_{III}}$.

**04.21330 Condition $III_1$ (positive low angle of attack, modified).** If the moment coefficient of the airfoil section at zero lift has a positive value, or a negative value smaller than 0.06, the effects of displaced ailerons on the moment coefficient shall be accounted for in Condition *III* for that portion of the span incorporating ailerons. To cover this point it will be satisfactory to combine 75 percent of the loads acting in Condition *III* with the loads due to a moment coefficient of $-0.08-C_{M_{III}}$ acting over that portion only of the span incorporating ailerons. The design dynamic pressure for the additional moment forces shall be equal to $0.75q_g$. Only the wings and wing bracing need be investigated for this condition.

**04.2134 Condition *IV* (negative low angle of attack).** The factors given in Table 04–1 for this condition shall be used, with the following provisions:

(*a*) $C_{N_{IV}}=\frac{n_{IV}(W/S)}{q_0}$.

(*b*) $C_c$=actual value corresponding to $C_{NIV}$.

(*c*) When $C_c$ is positive or has a negative value smaller than 0.02, it may be assumed to be zero.

(*d*) $C_M$=actual value corresponding to $C_{NIV}$.

**04.2135 Condition *V* (inverted flight).** The factors given in Table 04–1 for this condition shall be used, with the following provisions:

(*a*) $C_{NV}=\frac{n_V(W/S)}{q_L}$.

(*b*) $C_c'=0$.

(*c*) $CP'=25\%$.

(*d*) Only the rear (or single) lift truss system of externally braced wing structures need be investigated for this condition.

**04.2136 Condition *VI* (gliding).** The factors given in Table 04–1 shall be used for this condition, with the following provisions:

(*a*) $C_{NVI}$=value corresponding to $C_c$ max. (positive).

(*b*) $C_c'=C_c$ max. (positive)+0.01.

(*c*) $C_M$=actual value corresponding to $C_{N_{VI}}$.

(*d*) The drag of nacelles and other items attached to the wings shall be conservatively estimated and properly included in the investigation of this condition.

(*e*) Only the wings and wing bracing need be investigated for this condition.

**04.214 Symmetrical flight conditions (flaps or auxiliary devices in operation).**

**04.2140 General.** When flaps or other auxiliary high-lift devices are installed on the wings the design conditions shall be suitably modified to account for their use in flight. The modifications shall be based on the intended use of such devices and the aerodynamic characteristics of the wing. The following conditions, together with Table 04–2, shall be considered as representing the minimum number of conditions required to cover a suitable range of symmetrical flight loadings in cases where the flaps are used only at relatively low airspeeds.

**04.2141 Condition *VII* (positive gust, flaps deflected).** The factors given in Table 04–2 for this condition shall be used, with the following provisions:

(*a*) The most critical deflection of the flap shall be investigated.

(*b*) The magnitude and distribution of normal, chord and moment forces over the wing shall correspond to that which would be obtained in developing the specified *limit* gust load factor at the specified airspeed.

**04.2142 Condition *VIII* (negative gust, flaps deflected).** The factors given in Table 04–2 for this condition shall be used, with the following provisions:

(*a*) The most critical deflection of the flap shall be investigated.

(*b*) The magnitude and distribution of normal, chord and moment forces over the wing shall correspond to that which would be obtained in encountering the specified *limit* gust load factor at the specified airspeed.

**04.2143 Condition *IX* (dive, flaps deflected).** The factors given in Table 04 2 for this condition shall be used, with the following provisions:

(*a*) The most critical deflection of the flap shall be investigated.

(*b*) The load factor and the magnitude and distribution of normal, chord and moment forces over the wing shall correspond to the angle of attack at which the greatest rearward chord loads are produced on the wing structure.

(*c*) Only the wings and wing bracing need be investigated for this condition.

**04.215 Unsymmetrical flight conditions.**

**04.2150 General.** In the following unsymmetrical flight conditions, the unbalanced rolling moment shall be assumed to be resisted by the angular inertia of the complete airplane. See Civil Aeronautics Manual 04.2150 for an acceptable alternative procedure.

**04.2151 Condition $I_u$.** Condition *I* (§ 04.2131) shall be modified by assuming 100 percent of the air load acting on one wing and 40 percent on the other. For airplanes over 1,000 pounds standard weight the latter factor may be increased linearly with standard weight up to 80 percent at 25,000 pounds.

**04.2152 Condition $III_u$.** Condition *III* (§ 04.2133) shall be modified as described for Condition $I_u$ in § 04.2151.

**04.2153 Condition $V_u$.** Condition V (§ 04.2135) shall be modified as described for Condition $I_u$ in § 04.2151.

**04.216 Special flight conditions.**

**04.2160 Gust at reduced weight.** The requirements for gust conditions (excepting tail surface gust conditions) under any loading between minimum and maximum design weight shall be met by primary structure critically loaded thereby.

**04.2161 Lift-wire-cut.** For wings employing wire bracing in the lift truss, Conditions *I* and *III* shall be investigated, using load factors *nI* and *nIII* of one half the values specified for these conditions and assuming that any lift wire is out of action. This requirement does not apply to parallel double lift wires, for which case see § 04.273.

**04.2162 Drag-wire-cut.** Drag struts in double-truss systems shall be designed to withstand the loads developed when the drag wire of the upper system in one bay and the drag wire of the lower system in the adjacent bay are each carrying their *limit* loads from any flight condition, the remaining wires in these two bays being assumed to be out of action. The minimum *ultimate* factor of safety shall be 1.5.

**04.2163 Unsymmetrical propeller thrust.** The structure shall incorporate an *ultimate* factor of safety of 1.5 against failure due to loads caused by maximum (except take-off) power applied on one side of the plane of symmetry only, when power on the other side is off and the airplane is in unaccelerated rectilinear flight.

**04.2164 Wing tanks empty.** If fuel tanks are supported by the wing structure, such structure and its bracing shall also be investigated for Conditions *I, II, III,* and *IV* with wing tanks empty. The design weight may be reduced by 0.9 pounds per certified maximum (except take-off) horsepower.

**04.217 Wing load distribution.** The *limit* air loads and inertia loads acting on the wing structure shall be distributed and applied in a manner closely approximating the actual distribution in flight.

**04.22 Control surface loads.**

**04.220 General.** In addition to the flight loads specified in § 04.21 the primary structure shall meet the requirements hereinafter specified to account for the loads acting on the control surfaces. The following loading conditions include the application of balancing loads (§ 04.128) derived from the symmetrical flight conditions and also cover the possibility of loading the control surfaces and systems in operating the airplane and by encountering gusts. See also § 04.27 for multiplying factors of safety required in certain cases.

**04.221 Horizontal tail surfaces.**

**04.2210 Balancing.** *The limit* load acting on the horizontal tail surface shall not be less than the maximum balancing load obtained from Conditions *I, II, III, IV, VII,* and *VIII.* In computing these loads for tail surface design the moments of fuselage and nacelles shall be suitably accounted for. The factors given in Table 04–3 shall be used, with the following provisions:

(*a*) For Conditions *I, II, III,* and *IV, P* (in Fig. 04–4)=40 percent of net balancing load. (This means that the load on the fixed surface should be 140 percent of the net balancing load.)

In any case $P$ need not exceed that corresponding to a *limit* elevator control force of 150 pounds applied by the pilot.

(*b*) For Conditions *VII* and *VIII*, $P$ may be assumed equal to zero.

**04.2211 Maneuvering (horizontal surfaces).** The factors and distributions specified in Table 04–3 and Fig. 04–5 for this condition shall be used, together with the following provisions:

(*a*) The *limit* unit loading in either direction need not exceed that corresponding to a 300 pound force on the elevator control (see Table 04–6).

(*b*) The average *limit* unit loading shall not be less than 15 pounds per square foot (see Table 04–3).

**04.2212 Damping (horizontal surfaces).** The total *limit* load acting down on the fixed surface (stabilizer) in the maneuvering condition (§ 04.2211) shall be applied in accordance with the load distribution of Fig. 04–6, acting in either direction. The load acting on the movable surface in the maneuvering condition may be neglected in determining the damping loads.

**04.2213 Tab effects (horizontal surfaces).** When a tab is installed so that it can be used by the pilot as a trimming or assisting device, a *limit* up load over the tab corresponding to the dynamic pressure at $V_L$ and the maximum tab deflection shall be assumed to act in conjunction with the *limit* down load specified in § 04.2211, disregarding the provisions of § 04.2211 (*a*), applied over the remaining area. If the control force necessary to balance the resulting loads on the elevator and tab exceeds 200 pounds (Table 04–6), the loadings over the areas not covered by the tab may be reduced until the control force is equal to this maximum *limit* value.

**04.222 Vertical tail surfaces.**

**04.2220 Maneuvering.** The factors given in Table 04–4 and Fig. 04–5 for this condition shall be used, with the following provisions:

(*a*) If the propeller axes are not in the plane of symmetery, the design speed shall not be less than the maximum speed in level flight with any engine inoperative.

(*b*) The *limit* unit loading in either direction need not exceed that corresponding to the maximum *limit* control force (Table 04–6) except as modified by paragraph (*c*) following.

(*c*) In any case the average *limit* unit loading shall not be less than the minimum pressure specified in Table 04–4 for this condition.

**04.2221 Damping (vertical surfaces).** The total *limit* load acting on the fixed surface (fin) in the maneuvering condition shall be applied in accordance with the load distribution of Fig. 04–6, acting in either direction. The load acting on the movable surface in the maneuvering condition may be neglected in determining the damping loads.

**04.2222 Gusts (vertical surfaces).** The gust conditions specified in Table 04–4 shall be applied, using the following formulae and provisions:

(*a*) The gust shall be assumed to be sharp-edged and to act normal to the plane of symmetry in either direction.

(*b*) The average *limit* unit pressure, $\overline{w}$, developed in striking the gust shall be determined from the following formula:

$\overline{w}=UVm/575$, where

$\overline{w}$ is in pounds per square foot,

$U$ is in feet per second

$V$ is in miles per hour and

$m$=slope of lift curve, $C_L$ per radian, corrected for aspect ratio.

The aspect ratio shall not be taken as less than 2.0 in any case.

(*c*) This condition applies only to that portion of the vertical surface which has a well-defined leading edge.

(*d*) The chord distribution extending over the fixed and movable surfaces shall simulate that for a symmetrical airfoil, except that the distribution in Fig. 04–6 may be used where applicable.

**04.2223 Tab effects (vertical surfaces).** When a tab is installed on the vertical movable tail surface so that it can be used by the pilot as a trimming device the *limit* unit loading over the entire vertical tail surfaces shall not be less than that corresponding to the maximum deflection of the tab together with simultaneous application of the following control force in a direction assisting the tab action:

For airplanes with all propeller axes in the plane of symmetry, zero.
For airplanes with propeller axes not in the plane of symmetry, 200 pounds.

The factors specified in Table 04–4 for this condition shall be used, with the following exception:

(*a*) If the propeller axes are not in the plane of symmetry, the design speed $V_L$ specified in Table 04–4 may be reduced to the maximum speed in level flight with any engine inoperative.

**04.2224 Special cases (Vertical surfaces).** A special ruling shall be obtained from the Administrator when an automatic pilot is used on airplanes with propeller axes not in the plane of symmetry.

**04.223 Ailerons.**

**04.2230 Maneuvering.** The factors given in Table 04–5 and Fig. 04–7 for this condition shall be used, with the following provisions:

(*a*) If the propeller axes are not in the plane of symmetry, the design speed shall not be less than the maximum speed in level flight with any engine inoperative.

(*b*) The *limit* unit loading in either direction need not exceed that corresponding to the maximum control force (Table 04–6) resisted by only one aileron, except as modified by paragraph (*c*) following.

(*c*) In any case the average *limit* unit loading shall not be less than the minimum pressure specified in Table 04–5 for this condition.

**04.2231 Tab effects (ailerons).** (Applies only to airplanes with propeller axes not in the plane of symmetry.) When a tab is installed on one or both ailerons so that it can be used by the pilot to assist in moving the ailerons, the *limit* unit loading over both ailerons shall be of sufficient magnitude and in such direction as to hold the ailerons in equilibrium with the tab or tabs deflected to the maximum position. The factors specified in Table 04–5 for this condition shall be used.

**04.2232 Fying conditions (ailerons).** The ailerons and their control system shall be capable of meeting all requirements specified in the basic symmetrical flying conditions so far as the latter produce symmetrical loads on the ailerons.

**04.224 Wing flaps.** Wing flaps shall be loaded in accordance with Conditions *VII* and *VIII* (§ 04.2141 and § 04.2142) and in addition shall be capable of developing an *ultimate* factor of safety of at least 1.5 with respect to any intermediate conditions which are more severe for any part of the flap or its operating mechanism.

**04.225 Tabs.** The *limit* forces acting on control-surface tabs shall be determined from the most severe combination of airplane speed and tab normal force coefficient likely to be obtained for any usable loading condition of the airplane and at speeds up to the design gliding speeds, $V_g$. An *ultimate* factor of safety of at least 1.5 shall be maintained.

**04.226 Special devices.** Special rulings shall be obtained from the Administrator in connection with the design and analysis of wing-slot structures, spoilers, unconventional ailerons, auxiliary airfoils, and similar devices. Requests for special rulings shall be accompanied by suitable drawings or sketches of the structure in question, together with general information and an outline of the method by which it is proposed to determine the structural loading.

**04.23 Control system loads.**

**04.230 General.** All control systems shall be designed for *limit* loads 25 percent greater than those corresponding to the *limit* loads specified for the control surfaces to which they are attached, assuming the movable surface to be in that position which produces the greatest load in the control system, except that the maximum and minimum control force limits in Table 04–6 shall apply as hereinafter specified. The factors of safety specified in Table 04–6 shall be used. See

also § 04.27 for multiplying factors of safety required in certain cases. See also § 04.331 for operation requirements for control systems.

**04.2300** The forces in the control wires or push rods operating the movable surfaces shall be computed and their effect on the rest of the structure shall be investigated and allowed for in the design of such structure.

**04.231 Elevator systems.** In applying § 04.230 the control force specified in Table 04–6 and Fig. 04–8 shall be assumed to act in a fore-and-aft direction and shall be applied at the grip of a control stick, or shall be equally divided between two diametrically opposite points on the rim of a control wheel.

**04.232 Rudder systems.** In applying § 04.230 the control force specified in Table 04–6 shall be assumed to act in a direction which will produce the greatest load in the control system and shall be applied at the point of contact of the pilot's foot.

**04.233 Aileron systems.** In applying § 04.230 it shall be assumed that the ailerons are loaded in opposite directions. The control force specified in Table 04–6 and Fig. 04–9 shall be assumed to act in a lateral direction at the grip of a control stick, or shall be assumed to act as part of couple equal to the specified force multiplied by the diameter of a control wheel. The following assumptions shall be made:

(*a*) For nondifferential ailerons, 75 percent of the stick force or couple shall be assumed to be resisted by a down aileron, the remainder by the other aileron; also, as a separate condition, 50 percent shall be assumed to be resisted by an up aileron, the remainder by the other aileron.

(*b*) For differential ailerons, 75 percent of the stick force or couple shall be assumed to be resisted by each aileron in either the up or down position, or rational assumptions based on the geometry of the system shall be made.

**04.234 Flap and tab control systems.** In applying § 04.230 suitable minimum manual forces shall be assumed to act on flap and tab control systems and other similar controls.

**04.24 Ground Loads.**

**04.240 General.** The following conditions represent the minimum amount of investigation required for conventional (tail down type) landing gear. For unconventional types it may be necessary to investigate other landing attitudes, depending on the arrangement and design of the landing gear members. Consideration will be given to a reduction of the specified *limit* load factors when it can be proved that the shock absorbing system will positively limit the acceleration factor to a definite lower value in the drop test specified in § 04.2411. The minimum factors of safety are specified for each loading condition. See also § 04.27 for multiplying factors of safety required in certain cases.

**04.241 Level landing.** The minimum *limit* load factor is specified in Fig. 04–10. The resultant of the ground reaction shall be assumed to be a force lying at the intersection of the plane of symmetry and a plane in which are located the axles and the center of gravity of the airplane less chassis. The propeller axis (or equivalent reference line) shall be assumed horizontal and the basic value of the vertical component of the resultant of the ground reaction shall be equal to the gross weight of the airplane minus chassis and wheels. The horizontal component shall be of the magnitude required to give the resultant force the specified direction except that it need not be greater than 25 percent of the vertical component. The resultant of the ground reaction shall be assumed to be divided equally between wheels and to be applied at the axle at the center of the wheel. The shock-absorber unit and tires shall be assumed to be deflected to half their total travel, unless it is apparent that a more critical arrangement could exist. The minimum *ultimate* factor of safety shall be 1.5.

**04.2410** If a sliding element instead of a rolling element is used for the landing gear, a horizontal component of one-half of the vertical component shall be used to represent the effect of ground friction, except that ski gear which is designed and used only for landing on snow and ice may be designed for the same horizontal component as wheel gear.

**04.2411 Energy absorption.** The level landing condition specified in § 04.241 shall be assumed to be produced by a free drop, in inches, equal to 0.36 times the calculated stalling speed ($V_s$) in miles per hour, except that the height of free drop shall not be less than 18 inches

for airplanes employing devices which increase the normal sinking speed, but need not exceed 18 inches when such devices are not employed. The height of free drop is measured from the bottom of the tire to the ground, with the landing gear extended to its extreme unloaded position. (See §§ 04.340 and 04.440.)

**04.242 Three-point landing.** The minimum *limit* load factor is specified in Fig. 04-10. The value of the sum of the static ground reactions shall be the gross weight of the airplane less chassis. The total load shall be divided between the chassis and tail skid or wheel in inverse proportion to the distances, measured parallel to the ground line, from the center of gravity of the airplane less chassis to the points of contact with the ground. The load on the chassis shall be divided equally between wheels. Loads shall be assumed to be perpendicular to the ground line in the three-point landing attitude, with all shock absorbers and tires deflected to the same degree as in level landing. The tail wheel or skid installation shall also be investigated for this condition. The minimum *ultimate* factor of safety shall be 1.5.

**04.2420 Energy absportion.**—The three-point landing condition specified in § 04.242 shall be assumed to be produced by a free drop as specified under § 04.2411. This requires shock absorption by both main wheels and tail wheel (or skid). (See §§ 04.340 and 04.440.)

**04.243 Side load.** The minimum *limit* load factor shall be 0.667. The weight of the airplane shall be assumed to act on one wheel in a direction perpendicular to the ground. In addition, a side component of equal magnitude shall be assumed to act inward and normal to the plane of symmetry at the point of contact of the wheel, and an aft component equal to 0.55 times the vertical component shall be assumed to act parallel to the ground at such point. The airplane shall be assumed to be in a three-point attitude with the shock absorbers deflected to their static position and the tires deflected one-quarter the nominal diameter of their cross section. The minimum *ultimate* factor of safety shall be 1.5.

**04.244 One-wheel landing.** An investigation of the fuselage structure is required for a one-wheel landing, in which only those loads obtained on one side of the fuselage in the level landing condition are applied. The resulting load factor is therefore one-half of the level landing load factor. (This condition is identical with the level landing condition insofar as the landing gear structure is concerned.) The minimum *ultimate* factor of safety shall be 1.5.

**04.245 Braked landing.** The minimum *limit* load factor shall be 1.33. Airplanes equipped with brakes shall be investigated for the loads incurred when a landing is made with the wheels locked and the airplane is in an attitude such that the tail skid or wheel just clears the ground. The weight of the airplane less chassis shall be assumed to act on the wheels in a direction perpendicular to the ground line in this attitude. In addition, a component parallel to the ground line shall be assumed to act at the point of contact of the wheels and the ground, the magnitude of this component being equal to the weight of the airplane less chassis times a coefficient of friction of 0.55. The tire in all cases shall be assumed to have deflected not more than one-quarter the nominal diameter of its cross section, and the deflection of the shock absorbers shall be the same as in level landing. The minimum *ultimate* factor of safety shall be 1.5.

**04.246 Side loads on tail wheel or skid.** Suitable assumptions shall be made to cover side loads acting on tail skids or tail wheels which are not free to swivel or which can be locked or steered by the pilot.

**04.25 Water loads.**

**04.250 General.** The following requirements shall apply to the entire airplane, but have particular reference to hull structures, wings, nacelles, and float supporting structure. The requirements for certification of floats as individual items of equipment are specified in Part 15. The minimum factors of safety are specified for each loading condition. See also § 04.27 for multiplying factors of safety required in certain cases. Detail design requirements for hulls and floats are specified in § 04.45.

**04.251 Landing with inclined reactions (float seaplanes).** The vertical component of the *limit* load factor shall be 4.20 except that it need not exceed a value given by the following formula:

$$n=3.0+0.133\ (W/S).$$

The propeller axis (or equivalent reference line) shall be assumed to be horizontal and the resultant water reaction to be acting in the plane of symmetry and passing through the center of gravity of the airplane less floats and float bracing but inclined so that its horizontal component is equal to one-quarter of its vertical component. The forces representing the weights of and in the airplane shall be assumed to act in a direction parallel to the water reaction. The weight of the floats and float bracing may be deducted from the gross weight of the airplane.

**04.2510** For the design of float attachment members, including the members necessary to complete a rigid brace truss through the fuselage, the minimum *ultimate* factor of safety shall be 1.85. For the remaining structural members the minimum *ultimate* factor of safety shall be 1.50.

**04.252 Landing with vertical reactions (float seaplanes).** The *limit* load factor shall be 4.33, acting vertically, except that it need not exceed a value given by the following formula:

$$n=3.0+0.133\ (W/S).$$

The propeller axis (or equivalent reference line) shall be assumed to be horizontal, and the resultant water reaction to be vertical and passing through the center of gravity of the airplane less floats and float bracing. The weight of the floats and float bracing may be deducted from the gross weight of the airplane.

**04.2520** The minimum factors of safety shall be the same as those specified in § 04.2510.

**04.253 Landing with side load (float seaplanes).** The vertical component of the *limit* load factor shall be 4.0, to be applied to the gross weight of the airplane less floats and float bracing. The propeller axis (or equivalent reference line) shall be assumed to be horizontal and the resultant water reaction shall be assumed to be in the vertical plane which passes through the center of gravity of the airplane less floats and float bracing and is perpendicular to the propeller axis. The vertical load shall be applied through the keel or keels of the float or floats, and evenly divided between the floats when twin floats are used. A side load equal to one-fourth of the vertical load shall be applied along a line approximately half-way between the bottom of the keel and the level of the water line at rest. When built-in struts are used, check calculations shall be made for the built-in struts with the side load at the level of the water line at rest. When twin floats are used, the entire side load specified shall be applied to the float on the side from which the water reaction originates. The minimum *ultimate* factor of safety shall be 1.50.

**04.254 Boat seaplanes.**

**04.2540 Local bottom pressures.**

(*a*) Maximum local pressure. The maximum value of the *limit* local pressure shall be determined from the following equation:

$$p_{max}=0.055\ V_s^{1.4}\left(1+\frac{W}{50{,}000}\right)^{1/4},\ \text{where}$$

$p$=pressure, pounds per square inch

$V_s$=stalling speed, flaps down, power on, in miles per hour. (To be calculated on the basis of wind tunnel data or flight tests on previous airplanes.)

$W$=design weight.

The minimum *ultimate* factor of safety shall be 1.5.

(*b*) Variation in local pressure. The local pressures to be applied to the hull bottom shall vary in accordance with Figure 04–11. No variation from keel to chine (beamwise) shall be assumed, except when the chine flare indicates the advisability of higher pressures of the chine.

(*c*) Application of local pressure. The local pressures determined from § 04.2540 (a) and Figure 04–11 shall be applied over a local area in such a manner as to cause the maximum local loads in the hull bottom structure.

**04.2541 Distributed bottom pressures.**

(*a*) For the purpose of designing frames, keels, and chine structure, the *limit* pressures obtained from § 04.2540 (a) and Figure 04–11 shall be reduced to *one-half* the "local" values and simultaneously applied over the entire hull bottom. The loads so obtained shall be carried

into the side-wall structure of the hull proper, but need not be transmitted in a fore-and-aft direction as shear and bending loads. The minimum *ultimate* factor of safety shall be 1.5.

(*b*) Unsymmetrical loading. Each floor member or frame shall be designed for a load on one side of the hull centerline equal to the most critical symmetrical loading, combined with a load on the other side of the hull centerline equal to one-half of the most critical symmetrical loading.

**04.2542 Step loading condition.**

(*a*) Application of load. The resultant water load shall be applied vertically in the plane of symmetry so as to pass through the center of gravity of the airplane (in full load condition).

(*b*) Acceleration. The *limit* acceleration shall be 4.33.

(*c*) Hull shear and bending loads. The hull shear and bending loads shall be computed from the inertia loads produced by the vertical water load. To avoid excessive local shear loads and bending moments near the point of water load application, the water load may be distributed over the hull bottom, using pressures not less than those specified in § 04.2541 (a). The minimum *ultimate* factor of safety shall be 1.5.

**04.2543 Bow loading condition.**

(*a*) Application of load. The resultant water load shall be applied in the plane of symmetry at a point one-tenth of the distance from the bow to the step and shall be directed upward and rearward at an angle of 30 degrees from the vertical.

(*b*) Magnitude of load. The magnitude of the *limit* resultant water load shall be determined from the following equation:

$P_b = \frac{1}{2} n_s W_e$, where

$P_b$ is the load in pounds,

$n_s$ is the step landing load factor,

$W_e$ is an effective weight which is assumed equal to one-half the design weight of the airplane.

(*c*) Hull shear and bending loads. The hull shear and bending loads shall be determined by proper consideration of the inertia loads which resist the linear and angular accelerations involved. To avoid excessive local shear loads, the water reaction may be distributed over the hull bottom, using pressure not less than those specified in § 04.2541 (a). The minimum *ultimate* factor of safety shall be 1.5.

**04.2544 Stern loading condition.**

(*a*) Application of load. The resultant water load shall be applied vertically in the plane of symmetry and shall be distributed over the hull bottom from the second step forward with an intensity equal to the pressures specified in § 04.2541 (a).

(*b*) Magnitude of load. The *limit* resultant load shall equal three-quarters of the design weight of the airplane.

(*c*) Hull shear and bending loads. The hull shear and bending loads shall be determined by assuming the hull structure to be supported at the wing attachment fittings and neglecting internal inertia loads. This condition need not be applied to the fittings or to the portion of the hull ahead of the rear attachment fittings. The minimum *ultimate* factor of safety shall be 1.5.

**04.2545 Side loading condition.**

(*a*) Application of load. The resultant water load shall be applied in a vertical plane through the center of gravity. The vertical component shall be assumed to act in the plane of symmetry and the horizontal component at a point half-way between the bottom of the keel and the load waterline at design weight (at rest).

(*b*) Magnitude of load. The *limit* vertical component of acceleration shall be 3.25 and the side component shall be equal to fifteen percent of the vertical component.

(*c*) Hull shear and bending loads. The hull shear and bending loads shall be determined by proper consideration of the inertia loads or by introducing couples at the wing attachment points. To avoid excessive local shear loads, the water reaction may be distributed over the hull bottom, using pressures not less than those specified by § 04.2541 (a). The minimum *ultimate* factor of safety shall be 1.5.

**04.255** (Unassigned.)

**04.256** (Unassigned.)

**04.257 Seaplane float loads.** Each main float of a float seaplane shall be capable of carrying the following loads when supported at the attachment fittings as installed on the airplane. The minimum *ultimate* factor of safety shall be 1.5.

(*a*) A *limit* load, acting upward, applied at the bow end of the float and of magnitude equal to one-half of that portion of the airplane gross weight normally supported by the particular float.

(*b*) The *limit* load specified in paragraph (*a*), above, acting upward at the stern.

(*c*) A *limit* load, acting upward, applied at the step and of magnitude equal to 1.33 times that portion of the airplane gross weight normally supported by the particular float.

**04.2570 Seaplane float bottom loads.** Main seaplane float bottoms shall be designed to withstand the following loads. The minimum *ultimate* factor of safety shall be 1.5.

(*a*) A *limit* load of at least 5.33 pounds per square inch over that portion of the bottom lying between the first step and a section at 25 percent of the distance from the step to the bow.

(*b*) A *limit* load of at least 2.67 pounds per square inch over that portion of the bottom lying between the section at 25 percent of the distance from the step to the bow and a section at 75 percent of the distance from the step to the bow.

(*c*) A *limit* load of at least 2.67 pounds per square inch over that portion of the bottom lying between the first and second steps. If only one step is used, this load shall extend over that portion of the bottom lying between the step and a section at 50 percent of the distance from the step to the stern.

**04.258 Wing-tip float loads.** Wing-tip floats and their attachment, including the wing structure, shall be analyzed for each of the following conditions, using a minimum *ultimate* factor of safety of 1.5:

(*a*) A *limit* load acting vertically up at the completely submerged center of buoyancy and equal to three times the completely submerged displacement.

(*b*) A *limit* load inclined upward at 45 degrees to the rear and acting through the completely submerged center of buoyancy and equal to three times the completely submerged displacement.

(*c*) A *limit* load acting parallel to the water surface (laterally) applied at the center of area of the side view and equal to one and one-half times the completely submerged displacement.

**04.2580** The primary wing structure shall incorporate sufficient extra strength to insure that failure of wing-tip float attachment members occurs before the wing structure is damaged.

**04.259 Miscellaneous water loads.**

**04.2590** Seawing loads. Special rulings shall be obtained from the Administrator for the strength requirements for seawings.

**04.26 Special loading conditions.**

**04.260 Engine torque.** In the case of engines having five or more cylinders the stresses due to the torque load shall be multiplied by a *limit* load factor of 1.5. For 4, 3, and 2 cylinder engines the *limit* load factors shall be 2, 3, and 4, respectively. The torque acting on the airplane structure shall be computed for the take-off power desired and the propeller speed corresponding thereto. (See § 04.744.) The engine mount and forward portion of the fuselage and nacelles shall be designed for this condition. The minimum *ultimate* factor of safety shall be 1.5, unless higher factors are deemed necessary by the Administrator in order to make special provision for conditions such as vibration, stress concentration, and fatigue.

**04.261 High angle of attack and torque.** The limit loads determined from § 04.260 shall be considered as acting simultaneously with 75 percent of the *limit* loads determined from Condition *I* (§ 04.2131). The engine mount, nacelles and forward portion of the fuselage (when a nose engine is installed) shall be designed for this condition. The minimum *ultimate* factor of safety shall be 1.5.

**04.2610** The engine mounts, nacelles, and forward portion of the fuselage (when a nose engine is installed) shall be investigated for the *limit* loads determined from Condition *I* (see §§ 04.2131 and 04.2160) acting simultaneously with the *limit* loads due to the engine torque

determined in accordance with § 04.260, except that the engine power and the propeller speed shall correspond to the design power (§ 04.105) or the output specified for climbing flight (see § 04.744), whichever is higher. The minimum *ultimate* factor of safety shall be 1.5.

**04.262 Side load on engine mount.** The *limit* load factor for this condition shall be equal to one-third of the *limit* load factor for Flight Condition *I* (§ 04.2131) but shall in no case be less than 1.33. The engine mount and forward section of the fuselage and nacelles shall be analyzed for this condition, considering the *limit* load to be produced by inertia forces. The minimum *ultimate* factor of safety shall be 1.5.

**04.263 Up load on engine mount.** For engine mounts the *limit* load in each member shall be arbitrarily assumed as 50 percent of that in the level landing condition but of opposite sign. The minimum *ultimate* factor of safety shall be 1.5.

**04.264 Passenger loads.** Passenger loads in the accelerated flight conditions shall be computed for a standard passenger weight of 170 pounds, and a minimum *ultimate* factor of safety of 1.50 shall be used, except that seats and berths need not be designed for the reduced weight gust conditions specified in § 04.2160. This shall not exempt the primary structure from such gust conditions.

**04.2640** Structures to which safety belts are attached shall be capable of withstanding an *ultimate* load of 1,000 pounds per person applied through the safety belt and directed upward and forward at an angle of 45 degrees with the floor line.

**04.265 Local loads.** The primary structure shall be designed to withstand local loads caused by dead weights and control loads. Baggage compartments shall be designed to withstand loads corresponding to the maximum authorized capacity. The investigation of dead-weight loads shall include a sufficient number of reduced weight gust conditions to insure that the most severe combinations have been investigated. See § 04.90 for standard weights.

**04.266 Rigging loads.** Structures braced by wires (or tie-rods) shall be capable of developing an ultimate factor of safety of 1.5 with respect to the *limit* loads due to rigging the wires to 20 percent of their rated strength (strength of wire, not terminal). When the structure is such that all wires cannot be simultaneously rigged to 20 percent of their rated loads, a rigging condition shall be assumed in which the average of the rigging loads, expressed in percent, equals 20. (See also § 04.274.) The above condition need not be superimposed on other loading conditions, but the Administrator may require additional investigation for residual rigging loads when such investigation appears necessary. (See also § 04.315.)

**04.267 Air loads on struts.** External wing-brace struts which are at an angle of more than 45 degrees with the plane of symmetry and which have a cross-sectional fineness ratio of more than 3 shall be assumed to act as lifting air foils and shall be designed to carry the resultant transverse loads in combination with the specified axial loads. In computing the *limit* loads the strut sections shall be assumed to have a normal force coefficient equal to 1.0 and the total air load shall be based on the exposed area of the strut. The chord components and vertical reactions of such air load and the lift contributed by the strut shall not be considered in the analysis of the wing.

**04.27 Multiplying factors of safety.**

**04.270 General.** In addition to the minimum factors of safety specified for each loading condition, the multiplying factors specified in Table 04–7 and the following paragraphs shall be incorporated in the structure. The total factor of safety required for any structural component or part equals the minimum factor of safety specified for the loading condition in question multiplied by the factors of safety hereinafter specified, except that certain multiplying factors may be included in others, as indicated in Table 04–7.

**04.271 Fittings.** All fittings in the primary structure shall incorporate the multiplying factor of safety specified in Table 04–7. For this purpose fittings are defined as parts used to connect one primary member to another and shall include the bearing of those parts on the members thus connected. Continuous joints in metal plating and welded joints between primary structural members are not classified as fittings. (See also §§ 04.4030 and 04.4031.)

**04.272 Castings.** All castings used in the primary structure shall incorporate a multiplying factor of safety not less than that specified in Table 04–7.

**04.273 Parallel double wires.** When parallel double wires are used in wing lift trusses each wire shall incorporate a multiplying factor of safety not less than that specified in Table 04–7.

**04.274 Wires at small angles.** Wire or tie-rod members of wing or tail surface external bracing shall incorporate a multiplying factor of safety computed as follows:

$K=L/2R$ (except that $K$ shall not be less than 1.0), where

$K$=the additional factor,

$R$=the reaction resisted by the wire in a direction normal to the wing or tail surface plane, and

$L$=the load required in the wire to balance the reaction $R$.

**04.275 Double drag trusses.** Whenever double drag trussing is employed, all drag wires shall incorporate a multiplying factor of safety varying linearly from 3.0, when the ratio of overhang to root chord of overhang is 2.0 or greater, to 1.20 when such ratio is 1.0 or less, assuming an equal division of drag load between the two systems.

**04.276 Torque tubes used as hinges.** When steel torque tubes are employed in direct bearing against strap-type hinges they shall incorporate a multiplying factor of safety at the hinge point not less than that specified in Table 04–7. (See also § 04.422.)

**04.277 Control surface hinges and control system joints.** Control surface hinges and control system joints subjected to angular motion, excepting ball or roller bearings and *AN* standard parts used in cable control systems, shall incorporate multiplying factors of safety not less than those specified in Table 04–7 with respect to the *ultimate* bearing strength of the softest material used as a bearing. For ball or roller bearings a *yield* factor of safety of 1.0 with respect to the manufacturer's non-Brinell rating is considered sufficient to provide an adequate *ultimate* factor of safety.

**04.278 Wire sizes.** (See §§ 04.403, 04.4032, and 04.412.)

**04.279** All structural members in the wing lift truss system which transmit direct loads from the landing gear shall, in the landing conditions, incorporate a multiplying factor of safety not less than that specified in Table 04–7.

## 04.3 PROOF OF STRUCTURE

**04.30 General.** Proof of compliance with the loading requirements outlined in § 04.2 shall be made in a manner satisfactory to the Administrator and may consist of structural analyses, load tests, flight tests, references to previously approved structures, or combinations of the above. Any condition which can be shown to be noncritical need not be further investigated.

**04.300 Proof of structural analysis.** Structural analyses will be accepted as complete proof of strength only in the case of structural arrangements for which experience has shown such analyses to be reliable. References shall be given for all methods of analysis, formulae, theories, and material properties which are not generally accepted as standard. The acceptability of a structural analysis will depend to some extent on the excess strength incorporated in the structure.

**04.3000** The structural analysis shall be based on guaranteed minimum mechanical properties of the materials specified on the drawings, except in cases where exact mechanical properties of the materials used are determined.

**04.3001** The effects of welding, form factors, stress concentrations, discontinuities, cut-outs, instability, end fixity of columns and vibration shall be accounted for when such factors are present to such an extent as to influence the strength of the structure.

**04.301 Combined structural analysis and tests.** In certain cases it will be satisfactory to combine structural analysis procedure with the results of load tests of portions of the structure not subject to accurate analysis. In such cases test results shall be reduced to correspond to the mechanical properties of the materials actually used in the airplane. When a unit other than the specific one tested is incorporated in the airplane presented for certification, test

results shall be reduced to correspond to the minimum guaranteed mechanical properties of the materials specified on the drawings.

**04.302 Load tests.** Proof of compliance with structural loading requirements by means of load tests only is acceptable provided that strength and proof tests (see §§ 04.126 and 04.127) are conducted to demonstrate compliance with §§ 04.200 and 04.201, respectively, and further provided that the following sub-paragraphs are complied with.

**04.3020** The tests shall be supplemented by special tests or analyses to prove compliance with multiplying factor of safety requirements. (See § 04.27.)

**04.3021** When a unit other than the specific one tested is incorporated in the airplane presented for certification, the results of *strength* tests shall be reduced to correspond to the minimum guaranteed mechanical properties of the materials specified on the drawings, unless test loads are carried at least 15 percent beyond the required values.

**04.3022** The determination of test loads, the apparatus used, and the methods of conducting the tests shall be satisfactory to the Administrator.

**04.3023** The tests shall be conducted in the presence of a representative of the Administrator unless otherwise directed by the Administrator.

**04.303 Flight load tests.** Proof of strength by means of flight load tests will not be accepted unless the necessity therefor is established and the test methods are proved suitable to the satisfaction of the Administrator.

**04.304 Load tests required.** The following load tests are required in all cases and shall be made in the presence of a representative of the Administrator unless otherwise directed by the Administrator:

(*a*) Strength tests of wing ribs. (See § 04.313.)
(*b*) Pressure tests of fuel and oil tanks. (See § 04.623.)
(*c*) Proof tests of tail and control surfaces. (See § 04.32.)
(*d*) Proof and operating tests of control systems. (See §§ 04.33 and 04.331.)

**04.31 Proof of wings.** The strength of stressed-skin wings shall be substantiated by load tests (§ 04.302) or by combined structural analysis and tests (§ 04.301). The torsional rigidity of the wings shall be within a range of values satisfactory for the prevention of flutter. Compliance with such torsional rigidity requirement shall be demonstrated by static tests or other methods acceptable to the Administrator.

**04.310 Redundancies.** Wing cellules in which the division of loading between lift trusses and drag trusses is indeterminate shall be analyzed either by an acceptable method for indeterminate structures or by making assumptions which result in conservative design loads for all members.

**04.311 Beams.** The following points shall be covered in the proof of strength of wing beams, in addition to any special types of possible failure peculiar to the structure.

**04.3110** Secondary bending. When axial loads are present the required minimum *ultimate* factor of safety shall be introduced before the computation of the bending moments in order to insure that the required *ultimate* loads can be supported by the structure.

**04.3111 Lateral buckling.** The ability of beams to resist lateral buckling shall be proved.

**04.3112 Webs.** The strength of shear webs shall be proved.

**04.3113** When axial load is present tests are required to determine the effective "*EI*" in the case of truss-type beams and beams having unconventional web construction.

**04.3114 Joint slippage in wood beams.** When a joint in a wood beam is designed to transmit bending from one section of the beam to another or to the fuselage, the stresses in each part of the structure shall be calculated on the assumption that the joint is 100 percent efficient (except in mid-bay for which see § 04.4110) and also under the assumption that the bending moment transmitted by the joint is 75 percent of that obtained under the assumption of perfect continuity. Each part of the structure shall be designed to carry the most severe loads determined from the above assumptions.

**04.3115 Bolt holes.** In computing the area, moment of inertia, etc., of wood beams pierced by bolts, the diameter of the bolt hole shall be assumed to be one-sixteenth inch greater than the diameter of the bolt.

**04.3116** In computing the ability of box beams to resist bending loads only that portion of the web with its grain parallel to the beam axis and one-half of that portion of the web with its grain at an angle of 45 degrees to the beam shall be considered. The more conservative method of neglecting the web entirely may be employed.

**04.312 Drag trusses.** *Drag struts shall be assumed to have an end fixity coefficient of 1.0* except in cases of unusually rigid restraint, in which a coefficient of 1.5 may be used.

**04.313 Ribs.** The strength of ribs shall be proved by test to at least 125 percent of the *ultimate* loads for the most severe loading conditions, except that consideration will be given to structural analyses in conjunction with suitable specimen test data when it can be demonstrated to the satisfaction of the Administrator that it is impractical to simulate the actual loading conditions in a static test. Such analyses shall, on the basis of guaranteed minimum material properties, show proof of strength at 125 percent of the required *ultimate* loads. The following points shall also apply in proving the strength of ribs.

**04.3130** The load shall be suitably distributed between upper and lower wing surfaces unless a more severe distribution is used.

**04.3131** *The effects of ailerons and high-lift devices shall be properly accounted for.*

**04.3132** Rib tests shall simulate conditions in the airplane with respect to torsional rigidity of spars, fixity conditions, lateral support and attachment to spars.

**04.314 Covering.** Proof of strength of fabric covering is not required when standard grades of cloth and methods of attaching and doping are employed *provided, however,* that the Administrator may require special tests when it appears necessary to account for the effects of unusually high design airspeeds or slipstream velocities, or similar factors. When metal covering is employed its ability to perform its structural function shall be demonstrated by tests of typical panels or by other means acceptable to the Administrator. In particular, compliance with § 04.201 requires demonstration of the behavior of the covering under load in order to determine the effects of temporary deformations (wrinkles).

**04.315 Nonparallel wires.** When two or more wires are attached to a common point on the wing, but are not parallel, proper allowance for redundancies and the effects of rigging shall be made.

**04.32 Proof of tail and control surfaces.** Structural analyses of tail and control surfaces will be accepted as complete proof of compliance with *ultimate* load requirements only when the structure conforms with conventional types for which reliable analytical methods are available. Proof tests as defined in § 04.127 are required to prove compliance with *yield* load requirements.

**04.320** Control surface tests shall include the horn or fitting to which the control system is attached.

**04.321** In the analysis of control surfaces proper allowance shall be made for rigging loads in brace wires in cases where the counter wires do not go slack before the *ultimate* load is reached.

**04.322** Analyses or individual load tests shall be conducted to demonstrate compliance with the multiplying factor of safety requirements outlined in § 04.27 for control surface hinges and brace wires.

**04.323 Vibration tests.** The natural frequencies of vibration of the wings, fuselage, and control surfaces shall be within such ranges of values as are satisfactory for the prevention of flutter. Compliance with this requirement shall be demonstrated by vibration tests or other methods acceptable to the Administrator.

**04.33 Proof of control systems.** Structural analyses of control systems will be accepted as complete proof of compliance with *ultimate* load requirements only when the structure conforms with conventional types for which reliable analytical methods are available. Proof tests as defined in § 04.127 are required to prove compliance with *yield* load requirements.

**04.330** In control system tests, the direction of test loads shall be such as to produce the most severe loading of the control system structure. The tests shall include all fittings, pulleys, and brackets used to attach the control system to the primary structure.

**04.331 Operation test.** An operation test shall be conducted by operating the controls from the pilot's compartment with the entire system so loaded as to correspond to the minimum *limit* control force specified in item 3 of Table 04–6 for the control system in question. In this test there shall be no jamming, excessive friction, or excessive deflection.

**04.332** Analyses or individual load tests shall be conducted to demonstrate compliance with the multiplying factor of safety requirements specified in § 04.27 for control system joints subjected to angular motion.

**04.34 Proof of landing gear.** Structural analyses of landing gear will be accepted as complete proof of compliance with load requirements only when the structure conforms with conventional types for which reliable analytical methods are available. Analyses may be used to demonstrate compliance with the energy absorption requirements in certain cases. When such analyses are not applicable, dynamic tests shall be conducted to demonstrate compliance with energy absorption requirements.

**04.340 Energy absorption tests.** When tests for energy absorption are required they shall be so conducted as to simulate the landing conditions for which energy absorption requirements are specified in § 04.440, and test data shall be obtained from which the maximum acceleration developed at the center of gravity of the airplane can be determined. When drop tests of wheels, tires and shock absorbers are conducted in a combination differing from that employed on the airplane, proper allowance and corrections shall be made for the errors thus introduced.

**04.35 Proof of hulls and floats.** Structural analyses of hulls and auxiliary floats will be accepted as complete proof of compliance with load requirements only when the structure conforms with conventional types for which reliable analytical methods are available. The strength of the structure as a whole and its ability to distribute water loads from the bottom plating into the main structural members shall be demonstrated. See Part 15 for the requirements for main floats.

**04.36 Proof of fuselages and engine mounts.** Structural analyses of fuselages and engine mounts will be accepted as complete proof of compliance with load requirements only when the structure conforms with conventional types for which reliable analytical methods are available.

**04.360** The end fixity coefficient used in determining critical column loads shall in no case exceed 2.0. A value of 1.0 shall be used for all members in the engine mount. In doubtful cases, tests are required to substantiate the degree of restraint assumed.

**04.361 Baggage compartments.** The ability of baggage compartments to sustain the maximum authorized baggage loads under all required flight and landing conditions shall be demonstrated.

**04.37 Proof of fittings and parts.** Proof of strength of all fittings and joints of the primary structure is required. Where applicable, structural analysis methods may be used. When such methods are inadequate, a load test is required. Compliance with the multiplying factor of safety requirements for fittings (§ 04.27) shall be demonstrated.

**04.370** Since the system of forces which designs a fitting does not necessarily include the forces which design the attaching members, all the forces acting in all the specified conditions shall be considered for every fitting. The strength of each part of a built-up fitting shall be investigated and proper allowance shall be made for the effects of eccentric loading when initially present or when introduced by deflection of the structure under load.

**04.371 Bolts.** The allowable bearing load assumed for the threaded portion of a bolt shall not exceed 25 percent of the rated shear strength of the bolt.

## 04.4 DETAIL DESIGN AND CONSTRUCTION

**04.40 General.** The primary structure and all mechanisms essential to the safe operation of the airplane shall not incorporate design details which experience has shown to be unreliable or otherwise unsatisfactory. The suitability of all design details shall be established to the

satisfaction of the Administrator. Certain design features which have been found to be essential to the airworthiness of an airplane are hereinafter specified and shall be observed.

**04.400 Materials and workmanship.** The primary structure shall be made from materials which experience or conclusive tests have proved to be uniform in quality and strength and to be otherwise suitable for airplane construction. Workmanship shall be of sufficiently high grade as to insure proper continued functioning of all parts.

**04.401 Fabrication methods.** The methods of fabrication employed in constructing the primary structure shall be such as to produce a uniformly sound structure which shall also be reliable with respect to maintenance of the original strength under reasonable service conditions.

**04.4010 Gluing.** Gluing may be used except in cases where inferior joints might result or where proper protection from moisture cannot be shown.

**04.4011 Torch welding.** Torch welding of primary structural parts may be used only for ferrous materials and for such other materials shown to be suitable therefor.

**04.4012 Electric welding.** Electric arc, spot, or seam welding may be used in the primary structure when specifically approved by the Administrator for the application involved. Requests for approval of the use of electric welding shall be accompanied by information as to the extent to which such welding is to be used, drawings of the parts involved, apparatus employed, general methods of control and inspection, and references to test data substantiating the strength and suitability of the welds obtained.

**04.4013 Brazing and soldering.** The use of brazing and soldering in joining parts of the primary structure is prohibited except that brazing may be used in special cases when the suitability of the method and application can be definitely established to the satisfaction of the Administrator.

**04.4014 Protection.** All members of the primary structure shall be suitably protected against deterioration or loss of strength in service due to corrosion, abrasion, vibration or other causes. This applies particularly to design details and small parts. In seaplanes special precautions shall be taken against corrosion from salt water, particularly where parts made from different metals are in close proximity. All exposed wood structural members shall be given at least two protective coatings of varnish or approved equivalent. Built-up box spars and similar structures shall be protected on the interior by at least one coat of varnish or approved equivalent and adequate provisions for drainage shall be made. Due care shall be taken to prevent coating of the gluing surfaces.

**04.4015 Inspection.** Inspection openings of adequate size shall be provided for such vital parts of the aircraft as require periodic inspection.

**04.402 Joints, fittings and connecting parts.** In each joint of the primary structure the design details shall be such as to minimize the possibility of loosening of the joint in service, progressive failure due to stress concentration, and damage caused by normal servicing and field operations. (See § 04.271 for multiplying factors of safety required.)

**04.4020 Bolts, pins and screw.** All bolts and screws in the structure shall be of uniform material of high quality and of first-class workmanship. Machine screws shall not be used in the primary structure unless specifically approved for such use by the Administrator. The use of an approved locking device or method is required for all bolts, pins and screws.

**04.4021 Wood screws.** The use of wood screws in the primary structure is prohibited except in special cases when the suitability of the particular application is proved to the satisfaction of the Administrator.

**04.4022 Eyebolts.** Special eyebolts and similar bolts shall have a fillet between the head and the shank of at least ¼ the diameter of the bolt when used in control surfaces or at other locations where they might be subjected to bending or vibration.

**04.4023 Castings.** Castings used in the primary structure shall incorporate the multiplying factor of safety specified in § 04.272 and shall be of such material and design as to insure the maximum degree of reliability and freedom from defects. The administrator has the right to prohibit the use of castings where such use is deemed to be unairworthy.

**04.403 Tie-rods and wires.** The minimum size of tie-rod which may be used in primary structure is No. 6–40. The corresponding minimum allowable size of single-strand hard wire is No. 13 (0.072-inch diameter).

**04.4030 Wire terminals.** The assumed terminal efficiency of single-strand hard wire shall not be greater than 85 percent.

**04.4031 Wire anchorages.** A fitting attached to a wire or cable up to and including the 3,400-pound size shall have at least the rated strength of the wire or cable, and the multiplying factor of safety for fittings (§ 04.271) is not required in such cases. In the case of fittings to which several tie-rods or wires are attached, this requirement applies separately to each portion of the fitting to which a tie-rod or wire is attached, but does not require simultaneous application of rated wire loads. The end connections of brace wires shall be such as to minimize restraint against bending or vibration.

**04.4032 Counter wire sizes.** (See also §§ 04.274 and 04.275.) In a wire-braced structure the wire sizes shall be such that any wire can be rigged to at least 10 percent of its rated strength without causing any other wire to be loaded to more than 20 percent of its rated strength. As used here "rated strength" refers to the wire proper, not the terminal.

**04.404 General flutter prevention measures.** When he deems it necessary in the interest of safety, the Administrator may require special provisions against flutter. For specific requirements see §§ 04.323, 04.413, 04.423, 04.424, 04.425, 04.426, 04.4260, 04.435, 04.436, and 04.707.

**04.41 Detail design of wings.**

**04.410 External bracing.** When streamline wires are used for external lift bracing they shall be double unless the design complies with the lift-wire-cut condition specified in § 04.2161. (See also § 04.273.)

**04.4100 Wire-braced monoplanes.** If monoplane wings are externally braced by wires only, the right and left sides of the bracing shall be independent of each other so that an unsymmetrical load from one side will not be carried through the opposite wires before being counteracted, unless the design complies with the following conditions:

(*a*) The minimum true angle between any external brace wire and a spar is 14 degrees.

(*b*) The counter (landing) wires are designed to remain in tension at least up to the *limit* load.

(*c*) The landing and flying wires are double.

**04.4101** Multiple-strand cable shall not be used in lift trusses.

**04.4102 Jury struts.** When clamps are used for the attachment of jury struts to lift struts, the design shall be such as to prevent misalignment or local crushing of the lift strut.

**04.411 Wing beams.** Provisions shall be made to reinforce wing beams against torsional failure, especially at the point of attachment of lift struts, brace wires and aileron hinge brackets.

**04.4110 Wing beam joints.** Joints in metal beams (except pinned joints) and joints in mid-bays of wood beams shall maintain 100 percent efficiency of the beam with respect to bending, shear and torsion.

**04.412 Drag truss.** Fabric-covered wing structures having a cantilever length of overhang such that the ratio of span of overhang to chord at root of overhang is greater than 1.75 shall have a double system of internal drag trussing spaced as far apart as possible, or other means of providing equivalent torsional stiffness. In the former case counter wires shall be of the same size as the drag wires. (See also § 04.275.)

**04.4120** Multiple-strand cable shall not be used in drag trusses unless such use is substantiated to the satisfaction of the Administrator.

**04.413 Aileron and flap attachments.** Aileron and flap attachment ribs or brackets shall be rigidly constructed and firmly attached to the main wing structure in order to reduce wing flutter tendencies.

**04.414 Internally-braced biplanes.** Internally-braced biplanes shall be provided with *N or I struts to equalize deflections, and the effect of such struts shall be considered in the* stress analysis.

**04.415 Fabric covering.** Fabric covering shall comply with the requirements of § 04.400 and shall be attached in a manner which will develop the necessary strength, with due consideration for slip-stream effects. (See § 04.314.)

**04.416 Metal-covered wings.** The detail design of such wings shall incorporate suitable provision against buckling or wrinkling of metal covering as specified in §§ 04.201 and 04.314.

**04.42 Detail design of tail and control surfaces.**

**04.420 Installation.** Movable tail surfaces shall be so installed that there is no interference between the surfaces or their bracing when any one is held in its extreme position and any other is operated through its full angular movement.

**04.421 Stops.** When an adjustable stabilizer is used, stops shall be provided at the stabilizer to limit its movement, in the event of failure of the adjusting mechanism, to a range equal to the maximum required to balance the airplane. (See also § 40.6261.)

**04.4210** Elevator trailing edge tab systems shall be equipped with stops which limit the tab travel to values not in excess of those provided for in the structural report. This range of tab movement shall be sufficient to balance the airplane under the conditions specified in § 04.704.

**04.422 Hinges.** Hinges of the strap type bearing directly on torque tubes are permissible only in the case of steel torque tubes which have a multiplying factor of safety as specified in § 04.276. In other cases sleeves of suitable material shall be provided for bearing surfaces.

**04.4220** Clevis pins may be used as hinge pins provided that they are made of material conforming with, or the equivalent of, S. A. E. Specification 2330.

**04.423 Elevators.** When separate elevators are used they shall be rigidly interconnected.

**04.424 Dynamic and static balance.** All control surfaces shall be dynamically and statically balanced to the degree necessary to prevent flutter at all speeds up to the design gliding speed.

**04.425 Wing flaps.** Flaps shall be so installed as not to induce flutter or appreciable buffeting.

**04.426 Tabs.** The installation of trim and balancing tabs shall be such as to prevent the development of any free motion of the tab. When trailing edge tabs are used to assist in moving the main surface (balancing tabs), the areas and relative movements shall be so proportioned that the main surface is not overbalanced at any time.

**04.43 Detail design of control systems.**

**04.430 Installation.** All control systems and operating devices shall be so designed and installed as to provide reasonable ease of operation by the crew and so as to preclude the probability of inadvertent operation, jamming, chafing, interference by cargo, passengers or loose objects, and the slapping of cables against parts of the airplane. All pulleys shall be provided with satisfactory guards.

**04.431 Stops.** All control systems shall be provided with stops which positively limit the range of motion of the control surfaces. Stops shall be capable of withstanding the loads corresponding to the design conditions for the control system.

**04.432 Joints.** Bolts with castellated nuts safetied with cotter pins or with an approved type of self-locking nut shall be used throughout the control system, except that the use of clevis pins in standard cable ends, thimbles and shackles is satisfactory for light airplanes as defined in § 04.01.

**04.433 Welds.** Welds shall not be employed in control systems to carry tension without reinforcement from rivets or bolts.

469011°—42——4

**04.434 Flap controls.** The flap-operating mechanism shall be such as to prevent sudden, inadvertent, or automatic opening of the flap at speeds above the design speedf or the extended flap conditions. The time required to fully extend or retract flaps shall not be less than 15 seconds, unless it can be demonstrated to the satisfaction of the Administrator that the operation of the flaps in a lesser time does not result in unsatisfactory flight characteristics. Means shall be provided to retain flaps in their fully retracted position and to indicate such position to the pilot.

**04.434–T Flap controls.** For transport-category airplanes, the flap control shall provide means for bringing the flaps from any position within the operating range to any one of three positions, designated hereinafter as landing, approach, and take-off positions, or to the fully retracted position, by placing the primary flap control in a single setting marked as corresponding to each such flap position, the flaps thereupon moving directly to the desired position without requiring further attention. If any extension of the flaps beyond the landing position is possible, the flap control shall be clearly marked to identify such range of extension.

The landing position, approach position, and take-off position, or any of them, may be made variable with altitude or weight by means of a secondary flap control provided for that purpose. Such a secondary control, if provided, shall operate independently of the primary control and in such manner that when it has been adjusted (for the effect of weight or altitude), the necessary flap position can thereafter be obtained by placing the primary flap control in the desired position. The secondary control shall be so designed and marked as to be readily operable by the crew.

The rate of flap retraction shall be such as to permit compliance with § 04.7540–T.

**04.435 Tab controls.** Tab controls shall be irreversible and nonflexible, unless the tab is statically balanced about its hinge line. Proper precautions shall be taken against the possibility of inadvertent or abrupt tab operation and operation in the wrong direction.

**04.4350** When adjustable elevator tabs are used for the purpose of trimming the airplane, a tab position indicator shall be installed and means shall be provided for indicating to the pilot a range of adjustment suitable for safe take-off and the directions of motion of the control for nose-up and nose-down motions of the airplane.

**04.436 Spring devices.** The use of springs in the control system either as a return mechanism or as an auxiliary mechanism for assisting the pilot (bungee device) is prohibited except under the following conditions:

(*a*) The airplane shall be satisfactorily maneuverable and controllable and free from flutter under all conditions with and without the use of the spring device.

(*b*) In all cases the spring mechanism shall be of a type and design satisfactory to the Administrator.

(*c*) Rubber cord shall not be used for this purpose.

**04.437 Single-cable controls.** Single-cable controls are prohibited except in special cases in which their use can be proved to be satisfactory.

**04.438 Control system locks.** When a device is provided for locking a control surface while the aircraft is on the ground or water, compliance with the following requirements shall be shown.

(*a*) The locking device shall be so installed as to positively prevent taxiing the aircraft faster than 20 miles per hour, either intentionally or inadvertently, while the lock is engaged.

(*b*) Means shall be provided to preclude the possibility of the lock becoming engaged during flights.

**04.439–T Trim controls.** For transport category airplanes, the trimming devices shall be capable of continued normal operation in spite of the failure of any one connecting or transmitting element in the primary control system. Trim controls shall operate in the plane and with the sense of the motion of the airplane which their operation is intended to produce.

**04.44 Detail design of landing gear.**

**04.440 Shock absorption.** All landing gear (including tail gear installations) shall be provided with shock-absorbing systems which will permit the airplane to be landed under the conditions specified in § 04.2411 and § 04.2420 without exceeding the ultimate load used in the

analysis of any landing gear member. (See § 04.340 for proof of absorption capacity.) If the design of the shock-absorbing system is such that the above method of specifying the required energy absorption capacity appears to give irrational results, an alternate method will be considered upon presentation of pertinent data.

**04.441 Shock-absorbing systems.** The shock-absorbing systems employed shall incorporate suitable means for absorbing the shocks developed in taxiing or running over rough ground.

**04.442 Wheels.** Main landing gear wheels shall be a of type or model certificated by the Administrator in accordance with the provisions of Part 15 and shall not be subjected to static loads in excess of those for which they are certificated. Tail wheels may be of any type or model and are not certificated. Nose wheels are subject to special rulings to be made by the Administrator.

**04.4420** For the purpose of these regulations main landing gear wheels are considered as those nearest the airplane center of gravity with respect to fore-and-aft location.

**04.4421** For the purpose of these regulations a tail wheel is considered as one which supports the tail of a conventional airplane in the three-point landing attitude. A nose wheel is considered to be a wheel supporting the nose of the airplane when the two main wheels are located behind the center of gravity.

**04.443 Tires.** A landing gear wheel may be equipped with any make or type of tire, provided that the tire is a proper fit on the rim of the wheel and provided that the tire rating of the Airplane Tire Committee of the Tire and Rim Association is not exceeded.

**04.4430** When specially constructed tires are used to support an airplane, the wheels shall be plainly and conspicuously marked to that effect. Such markings shall include the make, size, number of plies and identification marking of the proper tire.

**04.444 Retracting mechanism.** When retractable landing wheels are used visual means shall be provided for indicating to the pilot, at all times, the position of the wheels. Separate indicators for each wheel are required when each wheel is separately operated unless a single indicator is obviously satisfactory. In addition, landplanes shall be provided with an aural or equally effective indicator which shall function continuously after the throttle is closed until the gear is down and locked.

**04.4440** A positive lock shall be provided for the wheels in the extended position, unless a rugged irreversible mechanism is used.

**04.4441** Manual operation of retractable landing gears shall be provided for.

**04.445 Brakes.** Transport category airplanes shall be equipped with brakes certificated in accordance with the provisions of Part 15 for the maximum certificated landing weight at sea level and the power-off stalling speed, $V_{s_0}$ as defined in § 04.7511–T. The brake system for such airplanes shall be so designed and constructed that in the event of a single failure in any connecting or transmitting element in the brake system, or the loss of any single source of hydraulic or other brake operating energy supply, it shall be possible, as shown by suitable test or other data, to bring the airplane to rest under the conditions specified in § 04.7533–T with a mean negative acceleration during the landing roll of at least 50 percent of that obtained in determining the landing distance under that section.

**04.45 Hulls and floats.** (See also § 04.46.)

**04.450 Buoyancy (main seaplane floats).** Main seaplane floats shall have a buoyancy in excess of that required to support the gross weight of the airplane in fresh water as follows:

(*a*) 80 percent in the case of single floats,

(*b*) 90 percent in the case of double floats.

**04.4500** Main seaplane floats for use on aircraft of 2,500 pounds or more maximum authorized weight shall contain at least five water-tight compartments of approximately equal volume. Main seaplane floats for use on aircraft of less than 2,500 pounds maximum authorized weight shall contain at least four such compartments.

**04.451 Buoyancy (boat seaplanes).** The hulls of boat seaplanes and amphibians shall be divided into water-tight compartments in accordance with the following requirements:

(*a*) In aircraft of 5,000 pounds maximum authorized weight or more the compartments shall be so arranged that, with any two adjacent compartments flooded, the hull and auxiliary floats (and tires, if used) will retain sufficient buoyancy to support the gross weight of the aircraft in fresh water.

(*b*) In aircraft of 1,500 to 5,000 pounds maximum authorized weight the compartments shall be so arranged that, with any one compartment flooded, the hull and auxiliary floats (and tires, if used) will retain sufficient buoyancy to support the maximum authorized weight of the aircraft in fresh water.

(*c*) In aircraft of less than 1,500 pounds maximum authorized weight water-tight subdivision of the hull is not required.

(*d*) Bulkheads may have water-tight doors for the purpose of communication between compartments.

**04.452 Water stability.** Auxiliary floats shall be so arranged that when completely submerged in fresh water, they will provide a righting moment which is at least 1.5 times the upsetting moment caused by the aircraft being tilted. A greater degree of stability may be required in the case of large flying boats, depending on the height of the center of gravity above the water level, the area and location of wings and tail surfaces, and other considerations.

**04.453 Float design.** In designing the bow portion of floats and hulls suitable provision shall be made for the effects of striking floating objects.

**04.46 Fuselage and cabins.**

**04.460 Provision for turn-over.** The fuselage and cabins shall be designed to protect the passengers and crew in the event of a complete turn-over and adequate provision shall be made to permit egress of passengers and crew in such event. This requirement may be suitably modified when the possibility of a complete turn-over in landing is remote.

**04.461 Doors.** Closed cabins on all aircraft carrying passengers shall be provided with at least one adequate and easily accessible external door.

**04.4610** No passenger door shall be located in the plane of rotation of an inboard propeller, nor within 5 degrees thereof as measured from the propeller hub.

**04.462 Exits.** Closed cabins on aircraft carrying more than 5 persons shall be provided with emergency exits in addition to the one external door required by § 04.461, consisting of movable windows or panels or of additional external doors which provide a clear and unobstructed opening, the minimum dimensions of which shall be such that a 19-inch by 26-inch ellipse may be completely inscribed therein. The location and the method of operation of emergency exists shall be approved by the Administrator. If the pilot is in a compartment separate from the cabin, passage through such compartment shall not be considered as an emergency exit for the passengers. The number of emergency exits required is as follows:

(*a*) Aircraft with a total seating capacity of more than 5 persons, but not in excess of 15, shall be provided with at least one emergency exit or one suitable door in addition to the main door specified in § 04.461. This emergency exit, or second door, shall be on the opposite side of the cabin from the main door. If desired, an additional emergency exit may be provided in the top of the cabin, but such an installation shall not obviate the necessity for an exit on each side.

(*b*) Aircraft with a seating capacity of more than 15 persons shall be provided with an additional emergency exit or door either in the top or side of the cabin for every additional 7 persons or fraction thereof above 15, except that not more than 4 exits, including doors, will be required if the arrangement and dimensions are suitable for the purpose intended.

**04.463 Pilot's compartment.** The pilot's compartment shall be so constructed as to afford suitable ventilation and adequate vision to the pilot under normal flying conditions. In cabin aircraft the windows shall be so arranged that they may be readily cleaned or easily opened in flight to provide forward vision for the pilot. The ventilation requirements of § 04.467 shall also apply to the pilot's compartment.

**04.4630** The pilot and the primary control units, excluding cables and control rods, shall be so located with respect to the propellers that no portion of the pilot or controls lies in the region between the plane of rotation of any propeller and the surface generated by a line passing through the center of the propeller hub and making an angle of 5 degrees forward or aft of the plane of rotation of the propeller.

**04.4631** A metal identification plate shall be permanently affixed in a visible location in the pilot's compartment of each airplane. This plate shall contain the manufacturer's name, the date of manufacture, the manufacturer's serial number and the model designation. The manufacturer shall specify the fuel capacity of each fuel tank on the manufacturer's identification plate, or on or adjacent to the fuel shut-off valves in the pilot's compartment.

**04.4632** Means shall be provided by which the operating personnel is suitably informed of all operation information and limitations deemed necessary by the Administrator.

**04.4633** The windows and windshields of the pilot's compartment in airplanes certificated for air transportation service shall be so arranged as to provide satisfactory forward vision and protection under all conditions and, to accomplish this, particular attention shall be paid to the following detail requirements:

(*a*) Sufficient data specifying the windshield material, number of laminations, binder if any, size and shape of panes, angle of panes to flight path and method and rigidity of mounting, shall be forwarded to the Administrator for rulings as to the acceptability of the windshield from the standpoint of strength.

(*b*) Windshields shall be so installed that they can be easily opened in flight and shall be so arranged that the air stream and snow or rain are deflected across the opening, or to provide equivalent results.

(*c*) The pilot's compartment shall be so constructed and arranged as to prevent glare or reflections which would interfere with the vision of either pilot, particularly while flying at night. The aircraft will be flown by a representative of the Administrator during hours of darkness to determine compliance with this provision.

**04.4634** The pilot's compartment in airplanes certificated for air transportation service shall be so constructed as to prevent any leakage into it when the airplane is flying in rain or snow.

**04.4635** When a second pilot is required (§ 61.520), two seats shall be installed side-by-side in the pilot's compartment of airplanes certificated for air transportation service from either of which the airplane shall be fully and readily controllable. If any difference exists as to convenience of the instruments and controls necessary for safe flight such difference should favor the left-hand seat. The left-hand seat shall be known as the first pilot's seat and the right-hand one as the second pilot's seat.

**04.4636** The navigation instruments for use by the pilot in airplane certificated for air transporation service shall be so installed as to be easily visible to him with the minimum practicable deviation from his normal position and line of vision when he is looking out and forward along the flight path and they shall also be visible to the second pilot.

**04.4637** All airplanes certificated for air transportation service shall be provided with a door or an adequate openable window between the pilot's compartment and the passengers' cabin. When a door is provided it shall be equipped with a locking means which shall prevent passengers from opening such door while in flight.

**04.464 Passenger chairs.** Seats or chairs for passengers shall be securely fastened in place in both open and closed airplanes, whether or not the safety belt load is transmitted through the seat. (See Part 15 and § 04.2640 for safety belt requirements.)

**04.465 Baggage compartments.** Each baggage and mail compartment shall bear a placard stating the maximum allowable weight of contents, as determined by the structural strength of the compartment (§ 04.265) and by flight test (§ 04.742). Suitable means shall be provided to prevent the contents of mail and baggage compartments from shifting.

**04.466 Reinforcement near propellers.** Surfaces near propeller tips shall be suitably stiffened against vibration and the effects of ice thrown from the propeller. (See § 04.611 for clearance requirements.)

**04.467 Passenger compartments.** A suitable ventilation system shall be provided which will preclude the presence of fuel fumes and dangerous traces of carbon monoxide in each passenger compartment.

## 04.5 EQUIPMENT

**04.50 General.** The equipment required shall be dependent upon the type of operation for which certification is to be made. The requirements specified herein (§ 04.5) shall be the basic equipment requirements and such additional equipment as may be specified in other sections of the Civil Air Regulations for specific special cases shall be supplemental hereto unless otherwise specified.

**04.500** Each item of equipment specified in the Civil Air Regulations shall be of a type and design satisfactory to the Administrator, shall be properly installed and shall function to the satisfaction of the Administrator. Items of equipment for which certification is required shall have been certificated in accordance with the provisions of Part 15 or previous regulations.

**04.501** An approved life preserver or flotation device is one approved by the Administrator for such usage on sea-going vessels.

**04.502** Fire extinguishing apparatus approved by the Underwriters Laboratories is considered to be of an approved type.

**04.51 Non-air-carrier (NAC) airplanes.** Airplanes which are certificated as non-air carriers, shall have at least the following equipment:

**04.510 NAC landplanes—Visual-contact day flying (within 100 miles of a fixed base):**

(*a*) One airspeed indicator. (See § 04.5800 for installation requirements.)
(*b*) One altimeter.
(*c*) A tachometer for each engine
(*d*) An oil-pressure gauge when an oil-pressure system is employed.
(*e*) A water thermometer for each water-cooled engine.
(*f*) An oil thermometer for each air-cooled engine.
(*g*) A manifold-pressure gauge, or equivalent, for each altitude engine.
(*h*) A fuel quantity gauge. (See § 04.624 for requirements.)
(*i*) Certificated safety belts for all passengers and members of the crew. (See Part 15 for belt requirements and § 04.5810 for installation requirements.)
(*j*) A portable fire extinguisher, which extinguisher shall be of an approved type, which shall have a minmum capacity, if carbon tetrachloride, of one quart, or, if carbon dioxide, of two pounds, or, if other, of equivalent effectiveness; except that any extinguisher of not less than half the above capacity may be used in an airplane equipped with an engine whose maximum rating is 40 horsepower or less. (See § 04.5811 for installation requirements.)
(*k*) Landing gear position indicator for retractable main landing gear. (See § 04.444 for requirements.)
(*l*) A device for measuring or indicating the amount of oil in the tanks. (See § 04.633 for requirements.)
(*m*) A first aid kit.
(*n*) A log-book for the airplane and one for each engine. (See Part 01 for requirements.)
(*o*) Rigging information for airplanes with wire-braced wings, either in the form of a sketch or listed data, which shall include sufficient information to permit proper rigging.

**04.511 NAC landplanes—Visual-contact day flying (unlimited distance).** Airplanes of this category shall have the equipment specified in § 04.510 and, in addition, there shall be installed:

(*a*) A magnetic compass. (See § 04.5803 for installation requirements.)

**04.512 NAC landplanes—Visual-contact night flying.** Airplanes of this category shall have the equipment specified in § 04.511 and, in addition, there shall be installed:

(*a*) A set of certificated standard forward position lights in combination with a certificated tail light. (See Part 15 for light requirements and § 04.5827 for installation requirements.)
(*b*) Two electric landing lights if the aircraft is operated for hire: *Provided, however,* That only one such landing light shall be required for any airplane certificated for a weight of less than 1,500 pounds. (See § 04.5825 for installation requirements.)

(*c*) Certificated landing flares as follows, if the aircraft is operated for hire beyond an area within a circle with a radius of 3 miles drawn from the center of the airport of take-off (see Part 15 for flare requirements and § 04.5813 for installation requirements):

Airplanes of 3,500 pounds maximum authorized weight or less—5 Class 3 flares or 3 Class 2 flares.

Airplanes of between 3,500 pounds and 5,000 pounds maximum authorized weight—4 Class 2 flares.

Airplanes of 5,000 pounds maximum authorized weight or more—2 Class 1 flares or 3 Class 2 flares and one Class 1 flare.

If desired, airplanes of less than 5,000 pounds maximum authorized weight may carry the flare equipment specified for heavier airplanes.

(*d*) A storage battery suitable as a source of energy supply for such lights and radio as are installed. (See § 04.5821 for installation requirements.)

(*e*) Radio equipment, if the aircraft is operated in a control zone (§ 60.103), as follows: A radio range and weather broadcast receiver operating within the frequency range of 200 to 400 kilocycles. Under normal atmospheric conditions this receiver must be capable of receiving with a range of 100 miles intelligence emanated from a radio range or weather broadcast station the equivalent of an SBRA installation.

(*f*) A set of spare fuses. (See § 04.5822 for installation requirements.)

**04.513 NAC landplanes—Instrument day flying.** Airplanes of this category shall have the equipment specified in § 04.511 and, in addition, there shall be installed:

(*a*) Radio equipment: Same as § 04.512 (*e*), whether the aircraft is operated for hire or not, and, in addition, a radio transmitter operated on 3105 kilocycles with a power output sufficient to establish communication at a distance of at least 100 miles under normal atmospheric conditions. Additional frequencies may be employed subject to approval of the Federal Communications Commission.

(*b*) A gyroscopic rate-of-turn indicator.

(*c*) A bank indicator. (Instruments (*b*) and (*c*) may be combined in one instrument if desired.)

(*d*) A sensitive altimeter which shall be adjustable for changes in barometric pressure and compensated for changes in temperature.

(*e*) A clock with a sweep-second hand.

(*f*) A storage battery suitable as a source of energy supply for the radio equipment installed. (See § 04.5821 for installation requirements and § 04.5823.)

(*g*) A generator.

(*h*) A set of spare fuses. (See § 04.5822 for installation requirements.)

(*i*) A rate-of-climb indicator.

**04.514 NAC landplanes—Instrument night flying.** Airplanes of this category shall have the equipment specified in §§ 04.512 and 04.513 combined. The storage battery shall be suitable as a source of energy supply for both the radio equipment and the lights.

**04.515 NAC seaplanes and amphibians.** The equipment requirements for seaplanes and amphibians shall be the same as specified for landplanes (§ 04.510 through § 04.514) except that seaplanes and amphibians shall not be certificated for operation over water out of sight of land unless they have at least the equipment specified in § 04.511, and except that all certificated seaplanes and amphibians shall also have an approved life preserver or flotation device for each person for which there is a seat, and except that all seaplanes and amphibians certificated for night operation shall also have a white anchor light. (See § 04.5824 for installation requirements.)

**04.52 Air carrier airplanes—Goods (ACG).** (To be supplied.)

**04.53 Air carrier airplanes—Passengers (ACP).** Airplanes certificated for use by an air carrier in passenger service shall have installed at least the following equipment:

**04.530 ACP landplanes—Visual-contact day flying.** The same as specified in § 04.511 and, in addition, the following:

(*a*) An electrically heated pitot tube, or equivalent, for the air speed indicator.

(*b*) One additional portable fire extinguisher of the type specified in § 04.510 (j). (See § 04.5811 for installation requirements).

(*c*) Fixed fire extinguishing apparatus of an approved type for each engine compartment.

(*d*) Type certificated radio equipment as specified in Part 40.

(*e*) A set of spare fuses. (See § 04.5822 for installation requirements.)

(*f*) A rate-of-climb indicator.

(*g*) A storage battery—Same as § 04.513 (f).

(*h*) A means for providing, without continuous manual operation, vision through the windshield adequate for executing take-offs and landings in rain.

Note: Subsection (h) is not effective until January 1, 1943.

**04.531 ACP landplanes—Visual-contact night flying.** The same as specified in § 04.530 and, in addition, the following:

(*a*) A set of certificated air-carrier airplane position lights. The forward lights may be air-carrier forward position lights or a combination of standard forward position lights and a set of auxiliary forward position lights. (See Part 15 for light requirements and section 04.5827 for installation requirements.)

(*b*) A storage battery of sufficient capacity for such lights and radio as are installed. (See § 04.5821 for installation requirements and § 04.5823.)

(*c*) Two electric landing lights. (See § 04.5825 for installation requirements.)

(*d*) Certificated landing flares as follows: 2 Class 1 flares or 3 Class 2 flares and one Class 1 flare. (See Part 15 for flare requirements and § 04.5813 for installation requirements.)

(*e*) Instrument lights. (See § 04.5826 for installation requirements.)

(*f*) Cabin lights in all passenger cabins and compartments.

(*g*) A generator. (See § 04.5823 for requirements.)

(*h*) Radio equipment same as § 04.530 (*e*).

**04.532 ACP landplanes—Instrument day flying.** The same as specified in § 04.530 except § 04.510 (*b*) and, in addition, the following:

(*a*) A gyroscopic rate-of-turn indicator combined with a bank indicator.

(*b*) A gyroscopic instrument showing bank and pitch.

(*c*) A gyroscopic direction finder.

(*d*) Two sensitive type altimeters, both of which shall be adjustable for changes in barometric pressure and compensated for changes in temperatures; *Provided*, That aircraft in use on or before January 1, 1939, and thereafter replacements and additions of aircraft of the same make and model may, for purposes of standardization, be deemed to have met this requirement if there are installed in each such aircraft, one sensitive type altimeter and one standard type altimeter provided each is adjustable for changes in barometric pressure, and compensated for changes in temperature.

(*e*) A free air thermometer of the distance type, with an indicating dial in the cockpit.

(*f*) A clock with a sweep-second hand.

(*g*) A vacuum gauge, installed in the lines leading to instruments (*a*), (*b*), and (*c*).

(*h*) Type certificated radio equipment as specified in Part 40.

(*i*) Means shall be provided to indicate icing conditions, or the probability thereof, in the carburetor if the de-icing device specified in § 04.6291 requires the manual manipulation of controls.

(*j*) A storage battery suitable as a source of energy supply for the radio equipment installed. (See § 04.5821 for installation requirements and § 04.5823.)

(*k*) A generator. (See § 04.5823 for installation requirements.)

**04.533 ACP landplanes—Instrument night flying.** The same as specified in §§ 04.531 and 04.532 combined. The storage battery, in this case, shall be of sufficient capacity for all radio equipment and all lights installed.

**04.534 ACP seaplanes and amphibians.** The same as specified for landplanes (§ 04.530 through § 04.533) and including the life preservers specified in § 04.515, except that when certificated for night operation they shall also have installed the anchor light specified in § 04.515.

**04.54** (Unassigned).

**04.55** (Unassigned).

**04.56** (Unassigned).

**04.57** (Unassigned).

**04.58 Installation requirements.** The following regulations apply to the installation of specific items of equipment and are additional to the regulations of § 04.50.

**04.580 Instruments.** The following regulations shall apply to the installation of instruments when such instruments are required by these regulations.

**04.5800 Airspeed indicator.** This instrument shall be so installed as to indicate true airspeed at sea level with the maximum practicable accuracy but the instrument error shall not be more than plus or minus 3 percent, except that it need not be less than plus or minus 5 miles per hour, at the level flight speed corresponding to the design power (§ 04.105), at $V_L$ (§ 04.111), or at the maximum attainable level flight speed, whichever is lowest.

**04.5801 Powerplant instruments and controls.** (See §§ 04.650 and 04.651.)

**04.5802 Fuel quantity gauge.** (See § 04.624.)

**04.5803 Magnetic compass.** This instrument shall be properly damped and compensated and shall be located where it is least affected by electrical disturbances and magnetic influences.

**04.5804 Navigation instruments.** Navigation instruments for use by the pilot shall be so installed as to be easily visible to him with the minimum practicable deviation from his normal position and line of vision when he is looking out and forward along the flight path and they shall also be visible to the second pilot.

**04.5805 Gyroscopic instruments.** All gyroscopic instruments shall derive their energy from engine-driven pumps or from auxiliary power units. Each source of energy supply and its attendant complete installation shall comply with the instrument manufacturer's recommendations for satisfactory instrument operation. On multiengine aircraft each instrument shall have two separate sources of energy, either one of which shall be capable of carrying the required load. Engine-driven pumps, when used, shall be on separate engines. The installation shall be such that failure of one source of energy or breakage of one line will not interfere with proper functioning of the instruments by means of the other source.

**04.581 Safety equipment installation.**

**04.5810 Safety belts.** Safety belts shall be so attached that no part of the attachment will fail at a load lower than that specified in § 04.2640.

**04.5811 Fire extinguishers.** The portable fire extinguisher specified in § 04.510 shall be so installed as to be accessible to the passengers. The two portable fire extinguishers specified in § 04.530 shall be so installed that one is readily available to the crew and the other is near the main external cabin door where it shall be readily available to passengers and ground personnel.

**04.5812 Safety belt signal.** When a signal or sign is used to indicate to passengers the times that seat belts should be fastened, such signal or sign shall be located in a conspicuous place and so arranged that it can be operated from the seat of either pilot.

**04.5813 Landing flares.** Landing flares shall be releasable from the pilot's compartment. Structural provision shall be made for the recoil loads.

**04.5814 Deicers.** Positive means shall be provided for the deflation of all wing boots.

**04.582 Electrical equipment installation.**

**04.5820 General.** Electrical equipment shall be installed in accordance with accepted practice and suitably protected from fuel, oil, water and other detrimental substances. Adequate clearance shall be provided between wiring and fuel and oil tanks, fuel and oil lines, carburetors, exhaust piping and moving parts.

**04.5821 Battery.** Battery shall be easily accessible and adequately isolated from fuel, oil and ignition systems. Adjacent parts of the aircraft structure shall be protected with a

suitable acid-proof paint if the battery contains acid or other corrosive substance and is not completely enclosed. If the battery is completely enclosed, suitable ventilation shall be provided. All batteries shall be so installed that spilled liquid will be suitably drained or absorbed without coming in contact with the airplane structure.

**04.5822 Fuses.** Fuses shall be so located that they can readily be replaced in flight. They shall break the current in a generating system at a sufficiently small current flow to adequately protect the lights, radio equipment and other parts of the circuit.

**04.5823 Generator.** When a generator is specified it shall have sufficient capacity to carry the entire running load. Such generator shall be engine-driven unless an approved equivalent system is provided. Auxiliary power units will be approved in lieu of batteries and engine-driven generators, provided that they are at least two in number and that the supply system is capable of carrying the entire running load with any one unit out of action.

**04.58230 Running load.** The running load shall be defined as the electric consumption of all lights, radio equipment and other electrical devices except those which are designed only for occasional intermittent use. Examples of devices regarded as intermittent are radio broadcasting equipment, landing lights and electrically operated landing gears and wing flaps. Radio range signal receivers and all other lights are considered a part of the constant load.

**04.5824 Anchor lights.** The anchor light specified for seaplanes and amphibians shall be so mounted and installed that, when the airplane is moored or drifting on the water, it will show a white light visible for at least two miles at night under clear atmospheric conditions.

**04.5825 Landing lights.** Electric landing lights shall be so installed on multiengine aircraft that at least one shall be not less than 10 feet to the right or left of the first pilot's seat and beyond the swept disk of the outermost propeller. On single-engine aircraft such lights shall be so installed that no visible portion of the swept disk of the propeller, if of the tractor type, is illuminated thereby. Individual switches for each light shall be provided in the pilot's compartment.

**04.5826 Instrument lights.** Instrument lights shall be so installed as to provide sufficient illumination to make all flight instruments easily readable and shall be equipped with rheostat control for dimming unless it can be shown that a non-dimming light is satisfactory.

**04.5827** Position lights shall be installed so that, with the airplane in normal flying position, the forward red position light is displayed on the left side and the forward green position light on the right side, each showing unbroken light between two vertical planes whose dihedral angle is 110 degrees when measured to the left and right, respectively, of the airplane from dead ahead. Such forward position lights shall be spaced laterally as far apart as practicable. One rear position light shall be installed on the airplane at the rear and as far aft as possible and shall show a light visible aft throughout a dihedral angle of 140 degrees bisected by a vertical plane through the longitudinal axis of the airplane. Such light shall emit (a) in the case of a non-air carrier airplane, a continuous white light and (b) in the case of an air carrier airplane, alternate red and white flashes as specified in § 15.2015. In lieu of such single rear position light, an air carrier airplane may carry two rear position lights, one red and one white, spaced as closely as possible to each other with one unit above the other and in combination emitting the red and white flashes specified in § 15.2015.

**04.5828 Master switch.** Electrical installations shall incorporate a master switch easily accessible to a member of the crew.

**04.583 Radio equipment installation.** (To be amplified.)

**04.589 Miscellaneous equipment installation.**

**04.5890 Seats.** Seats or chairs, even though adjustable, in open or closed airplanes, shall be securely fastened in place whether or not the safety belt load is transmitted through the seat.

**04.5891 Accessories.** Engine-driven accessories on multiengine aircraft shall be distributed among two or more engines.

## 04.6 POWERPLANT INSTALLATION

**04.60 Engines.** Engines shall be of a type and design which has been type certificated, or found eligible for use in certificated aircraft, in accordance with the requirements of Part 13 or shall have been approved as airworthy in accordance with previous regulations.

**04.61 Propellers.** Propellers shall be of a type and design which has been certificated as airworthy in accordance with the requirements of Part 14 or shall have been approved as airworthy in accordance with previous regulations, except that wood propellers of a conventional type for use in light airplanes defined in § 04.01 need not be certificated. In certain cases maximum engine bore limitations are also assigned to propellers. Propellers may be used on any engine provided that the certified power ratings, speed ratings, and bore of the engine are not in excess of the limitations of the propeller as certificated, and further provided that the vibration characteristics of the combination are satisfactory to the Administrator.

**04.610 Controllable pitch.** The control mechanism shall be designed and equipped with a positive stop which shall limit the minimum pitch so that the take-off crankshaft speed for which the aircraft is certificated is not exceeded during take-off with take-off power unless it is necessary to so locate the stop that a higher crankshaft speed may be used in an emergency. The means provided for controlling the pitch shall be so arranged as to minimize the attention required from a pilot to prevent the engines from exceeding their crankshaft speed limitations under any flight condition.

**04.611 Propeller clearance.** Propellers shall have a minimum ground clearance of 9 inches when the airplane is in a horizontal position with the landing gear deflected as it would be under the maximum authorized weight of the airplane. Propellers on seaplanes shall clear the water by at least 18 inches when the seaplane is at rest under the maximum authorized load condition. A clearance of at least 1 inch shall be provided between the tips of propellers and any part of the structure.

**04.62 Fuel systems.**

**04.620 Capacity and feed.** The fuel capacity shall be at least 0.15 gallons per maximum (except take-off) horsepower for which the airplane is certificated. Air-pressure fuel systems shall not be used. Only straight gravity feed or mechanical pumping of fuel is permitted. The system shall be so arranged that the entire fuel supply may be utilized in the steepest climb and at the best gliding angle and so that the feed ports will not be uncovered during normal maneuvers involving moderate rolling or side slipping. The system shall also feed fuels promptly after one tank has run dry and another tank is turned on. If a mechanical pump is used, an emergency hand pump of equal capacity shall be installed and available for immediate use in case of a pump failure during take-off. Hand pumps of suitable capacity may also be used for pumping fuel from an auxiliary tank to a main fuel tank.

**04.621 Tank installation.** No fuel tank shall be placed closer to an engine than the remote side of a fire-wall. At least one-half inch clear air space shall be allowed between the tank and fire wall. Spaces adjacent to the surfaces of the tank shall be ventilated so that fumes cannot accumulate or reach the crew or passengers in case of leakage. If two or more tanks have their outlets interconnected they shall be considered as one tank and the air space in the tanks shall also be interconnected to prevent differences in pressure at the air vents of each tank of sufficient magnitude to cause fuel flow between tanks. Mechanical pump systems shall not feed from more than one tank at a time except by special ruling from the Administrator.

**04.622 Tank construction.** Each fuel tank shall be provided with either a sump and drain located at the point which is lowest when the airplane is in a normal position on the ground or outlets at the bottom of the tank provided with large mesh finger strainers. If a sump is provided, the main fuel supply shall not be drawn from the bottom of this sump. If no sump is provided the system drain shall be controllable from the pilot's compartment and shall act as a tank drain. Each tank shall be suitably vented from the top portion of the air space. Such air vents shall be so arranged as to minimize the possibility of stoppage by dirt or ice formation. When large fuel tanks are used, the size of the vent tubes should be proportioned so as to permit rapid changes in internal air pressure to occur and thereby prevent collapse of the tanks in a

steep glide or dive. Tanks of 10 gallons or more capacity shall be provided with internal baffles unless suitable external support is provided to resist surging.

**04.623 Tank strength.** Fuel tanks shall be capable of withstanding an internal test pressure of 3½ pounds per square inch without failure or leakage. Fuel tanks of large capacity which have a maximum fuel depth greater than 2 feet shall be investigated for the pressure developed during the maximum *limit* acceleration with full tanks. Tanks shall be so designed, and the rivets or welds so located, as to resist vibration failures or leakage.

**04.624 Gauge.** A satisfactory gauge shall be so installed on all airplanes as to readily indicate to a pilot or flight mechanic the quantity of fuel in each tank while in flight. When two or more tanks are closely interconnected and vented, and it is impossible to feed from each one separately, only one fuel-level gauge need be installed. If a glass gauge is used, it shall be suitably protected against breakage.

**04.625 Lines and fittings.** All fuel lines and fittings shall be of sufficient size so that under the pressure of normal operation the flow is not less than double the normal flow required for take-off engine power. A test for proof of compliance with this requirement shall be made. All fuel lines shall be so supported as to prevent excessive vibration and should be located so no structural loads can be applied. Bends of small radius and vertical humps in the lines shall be avoided. Copper fuel lines which have been bent shall be annealed before installation. Parts of the fuel system attached to the engine and to the primary structure of the airplane shall be flexibly connected thereto. Flexible hose connections and fuel lines shall have metal liners or the equivalent. Fittings shall be of a type satisfactory to the Administrator.

**04.626 Strainers.** One or more strainers of adequate size and design, incorporating a suitable sediment trap and drain, shall be provided in the fuel line between the tank and the carburetor and shall be installed in an accessible position. The screen shall be easily removable for cleaning.

**04.627 Valves.** One or more positive and quick-acting valves that will shut off all fuel to each engine shall be within easy reach of the first pilot and the second pilot or of the flight mechanic. In the case of airplanes employing more than one source of fuel supply, suitable provision shall be made for independent feeding from each source.

**04.6270 Dump valves.** When fuel tanks are equipped with dump valves, the operating mechanism for such valves shall be within convenient reach of the first pilot and the second pilot, or of the flight mechanic. Dump valves shall be so installed as to provide for safe and rapid discharge of fuel.

**04.628 Drains.** One or more accessible drains shall be provided at the lowest point on the fuel systems to completely drain all parts of each system when the airplane is in its normal position on level ground. Such drains shall discharge clear of all parts of the airplane and shall be equipped with suitable safety locks to prevent accidental opening.

***04.629 Miscellaneous fuel system requirements.***

**04.6290 Filler openings.** All filler openings in the fuel system shall be plainly marked with the capacity and the word "fuel." Provision shall be made to prevent any overflow from entering the wing or fuselage.

**04.6291** An adequate means shall be provided for preventing the formation of ice in the engine carburetors. (See also § 04.532 (i).)

**04.63 Lubrication systems.**

**04.630 General.** Each engine shall have an independent oil supply. The oil capacity of the system shall be at least 1 gallon for every 20 gallons of fuel but shall not be less than 1 gallon for each 75 maximum (except take-off) rated horsepower of the engine or engines. A special ruling concerning the capacity will be made by the Administrator when oil may be transferred between engines in flight or when a suitable reserve is provided. The suitability of the lubrication system shall be demonstrated in flight tests in which engine temperature measurements are obtained. The system shall provide the engine with an ample quantity of oil at a temperature suitable for satisfactory engine operation.

**04.631 Tank installation.** Oil tanks shall be suitably vented and shall be provided with an expansion space which cannot be inadvertently filled with oil. Such expansion space shall be at least 10 percent of the total tank volume, except that it shall in no case be less than one-half gallon.

**04.632 Tank strength.** Oil tanks shall be capable of withstanding an internal test pressure of 5 pounds per square inch without failure or leakage. Tanks shall be so designed and the rivets or welds so located as to resist vibration failures and leakage.

**04.633 Gauge.** A suitable means shall be provided to determine the amount of oil in the system during the filling operation.

**04.634 Piping.** Oil piping shall have an inside diameter not less than the inside diameter of the engine inlet or outlet and shall have no splices between connections. Connections in the oil system shall be of a type satisfactory to the Administrator.

**04.635 Drains.** One or more accessible drains shall be provided at the lowest point on the lubricating systems to drain completely all parts of each system when the airplane is in its normal position on level ground. Such drains shall discharge clear of all parts of the airplane and shall be equipped with suitable safety locks to prevent accidental opening.

**04.636 Oil temperature.** A suitable means shall be provided for measuring the oil temperature at the engine inlet.

**04.637 Filler openings.** All filler openings in the oil system shall be plainly marked with the capacity and the word "oil."

**04.64 Cooling systems.**

**04.640 General.** The cooling system shall be of sufficient capacity to maintain engine temperatures within safe operating limits under all conditions of flight during a period at least equal to that established by the fuel capacity of the aircraft, assuming normal engine power and speeds. Compliance with this requirement shall be demonstrated in flight tests in which engine temperature measurements are obtained under critical flight conditions including flight with one or more engines inoperative.

**04.641 Radiators.** Radiators shall be so mounted as to reduce vibration and eliminate strains causing distortion.

**04.642 Piping.** Piping and connections shall conform to accepted standards and shall not transmit vibration to the radiator or the structure of the aircraft.

**04.643 Drains.** One or more accessible drains shall be provided at the lowest points on the cooling system to drain completely all parts of such system when the airplane is in its normal position on level ground. Such drains shall discharge clear of all parts of the airplane and shall be equipped with suitable safety locks to prevent accidental opening.

**04.644 Filler openings.** All filler openings in the cooling system shall be plainly marked with the capacity of the system and the name of the proper cooling liquid.

**04.65 Powerplant instruments, controls and accessories.**

**04.650 Instruments.** The engine instruments required are specified in § 04.5. The installation requirements for navigation instruments in § 04.5804 shall apply to tachometers and manifold pressure gauges. All other instruments shall be visible in flight to the pilot and co-pilot or to the flight mechanic. If the manifold pressure gauges and tachometers are not visible to the flight mechanic, he shall be provided with a duplicate set of these instruments.

**04.651 Controls.** All powerplant controls, including those of the fuel system, shall be plainly marked to show their function and method of operation.

**04.6510 Throttle controls.** Throttle controls shall be easily accessible to both pilots and shall be so arranged as to afford a positive and immediately responsive means of controlling all engines separately or simultaneously. Flexible throttle control systems shall be of a certificated type. A forward movement shall open the throttle.

**04.6511 Ignition switches.** Ignition switches shall be easily accessible to both pilots. A positive means for quickly shutting off all ignition of multiengine aircraft, by grouping of switches or otherwise, shall be provided.

**04.6512 Propeller pitch controls.** Separate pitch controls shall be provided for each propeller.

**04.652 Accessories (Air carrier airplanes).** (See § 04.5891.)

**04.66 Manifolding, cowling and firewall.**

**04.660 General.** All manifolds, cowling and firewalls shall be so designed and installed as to reduce to a minimum the possibility of fire either during flight or following an accident and shall therefore comply with accepted practice in all details of installation not hereinafter specified.

**04.661 Manifolds.** Exhaust manifolds shall be constructed of suitable materials, shall provide for expansion, and shall be arranged and cooled so that local hot points do not form. Gases shall be discharged clear of the cowling, airplane structure and fuel system parts of drains. They shall not blow back on the carburetor air intake or the pilot or passengers, nor cause a glare ahead of the pilot at night. No exhaust manifolding shall be located immediately adjacent to or under the carburetor or fuel system parts liable to leakage.

**04.662 Air intakes.** Carburetor air intakes shall be suitably drained and shall open completely outside the cowling unless the emergence of back-fire flames is positively prevented. The drain shall not discharge fuel in the path of possible exhaust flames.

**04.663 Engine cowling.** All cowling around the powerplant and on the engine side of the firewall shall be made of metal and shall be so arranged that any accumulations of dirt, waste or fuel may be observed without complete removal of the cowling. It shall fit tightly to the firewall, but openings may be provided if the airplane surface within 15 inches thereof is protected with metal or other suitable fireproofing material. The cowling shall be completely and suitably drained in all attitudes of flight and on the ground, with separate drains provided for the parts of the fuel system liable to leakage. All such drains shall be so located as to prevent fuel or oil from dripping onto the exhaust manifold or any parts of the aircraft and from permeating any material of a cellular nature

**04.664 Firewall.** A firewall shall be provided unless the engine is mounted in an isolated nacelle with no fuel tanks. Such fire bulkhead shall be constructed in either of the following approved manners:

(*a*) A single sheet of terne-plate not less than 0.028-inch thick.

(*b*) A single sheet of stainless steel not less than 0.015-inch thick.

(*c*) Two sheets of aluminum or aluminum alloy not less than 0.02-inch thick fastened together and having between them an asbestos paper or asbestos fabric sheet at least ⅛-inch thick.

**04.6640** The firewall shall completely isolate the engine compartment and shall have all necessary openings fitted with close-fitting grommets or bushings. Adjacent inflammable structural members shall be protected by asbestos or an equivalent insulating material and provision shall be made for preventing fuel and oil from permeating it.

**04.665 Heating systems.** Heating systems involving the passage of cabin air over or in close proximity to engine exhaust manifolds shall not be used unless adequate precautions are incorporated in the design to prevent the introduction of carbon monoxide into the cabin or pilot's compartment. They shall be constructed of suitable materials, be adequately cooled and be susceptible to ready disassembly for inspection.

**04.67** (Unassigned.)

**04.68** (Unassigned.)

**04.69 Miscellaneous powerplant requirements.**

**04.690 Materials.** Fuel, oil and cooling systems shall be made of materials which, including their normal or inherent impurities, will not react chemically with any fuels, oils or liquids that are likely to be placed in them.

## 04.7 PERFORMANCE

**04.70 Performance requirements.** All airplanes shall comply with the performance requirements set forth in §§ 04.707 and 04.708. All airplanes except those certificated in the transport category shall comply with §§ 04.700 through 04.7061, inclusive. Compliance with such performance requirements shall be shown in standard atmosphere, at all weights up to and including the standard weight (§ 04.102) and under all loading conditions within the center of gravity range certified (§ 04.742): *Provided*, That demonstration of compliance with landing-speed requirements, and with those relating to take-off time and distance, may be limited to an intermediate range of center of gravity positions if it can be shown that it is possible for the airplane to continue flight with one engine inoperative, and that passengers or other load can be easily and rapidly shifted while in flight to permit the realization, at the pilot's discretion, of a center of gravity position within the range covered by this demonstration. There shall be no flight or handling characteristics which, in the opinion of the Administrator, render the airplane unairworthy.

**04.700 Landing speeds.** The landing speed with power off, in standard calm air at sea level, shall not exceed a value determined as follows:

(*a*) Airplanes certificated for passenger carrying:

65 miles per hour for airplanes of 20,000 pounds *standard* weight or less,

70 miles per hour for airplanes of 30,000 pounds *standard* weight or more, and a linear variation with *standard* weight shall apply for airplanes between 20,000 and 30,000 pounds.

(*b*) Airplanes which are certificated for the carriage of goods only:

The above landing speed values may be increased 5 miles per hour.

**04.701 Take-off.** Take-off at sea level:

(*a*) Within 1,000 feet for landplanes;

(*b*) Within 60 seconds in calm air for seaplanes.

**04.702 Climb.** The average rate of climb for the first minute after the airplane leaves the take-off surface in accordance with § 04.701, and the rate of steady climb at sea levels with not more than maximum except take-off power, shall not be less in feet per minute than:

(*a*) Landplanes: Eight times the measured power-off stalling speed in miles per hour with the flaps and landing gear retracted, or 300 feet per minute, whichever is greater;

(*b*) Seaplanes: Six times the measured power-off stalling speed in miles per hour with the flaps retracted, or 250 feet per minute, whichever is greater.

**04.703 Controllability and maneuverability.** All airplanes shall be controllable and maneuverable under all power conditions and at all flying speeds between minimum flying speed and the maximum certified speed. All airplanes shall have control adequate for an average landing at minimum landing speed with power off.

**04.7030 *Controllability at the stall.*** With power off and with 75% maximum-except-take-off power, with flaps and landing gear in any position; the airplane shall have sufficient directional and lateral control so that when the airplane is stalled, the downward pitching motion following the stall shall occur prior to any uncontrollable roll or yaw. Any such pitching motion shall not be excessive and recovery to normal flight shall be possible by normal use of the controls after the pitching motion is unmistakably developed, without excessive loss of altitude.

**04.704 Balance.** As used in these regulations the term "balanced" refers to steady flight in calm air without exertion of control force by the pilot or automatic pilot. Lateral and directional balance is required at cruising speed, which for this purpose shall be taken as 90 percent of the high speed in level flight. Longitudinal balance is required under the following flight conditions:

(*a*) Power on: In level flight, at all speeds between cruising speed and a speed 20 percent in excess of stalling speed. In a climb, at maximum (except take-off) horsepower and a speed 20 percent in excess of stalling speed.

(*b*) Power off: In a glide, at a speed not in excess of 140 percent of the maximum permissible landing speed or the placard speed with flaps extended, whichever is lower, under the

forward center of gravity position approved with maximum authorized load and under the most forward center of gravity position approved, regardless of weight.

**04.705 Stability.** Under all power conditions all airplanes shall be longitudinally, laterally and directionally stable. An airplane will be considered to be longitudinally stable if, in stability tests, the amplitude of the oscillations decreases.

**04.706 Spinning.** (Not applicable to airplanes certificated in the transport category.) At any permissible combination of weight and center of gravity position obtainable with all or part of the design useful load, there shall be no excessive reversal of control forces during any possible spinning up to 6 turns. It shall be possible promptly to recover at any point in the spinning described above by using the controls in a normal manner for that purpose and without exceeding either the limiting airspeed or the limit design normal acceleration for the airplane. It shall not be possible to obtain uncontrollable spins by means of any possible use of the controls: *Provided*, That compliance with the foregoing requirements with respect to spinning shall not be required for those airplanes—

(*a*) permanently placarded "intentional spinning prohibited"; or

(*b*) demonstrated to the satisfaction of the Administrator to be characteristically incapable of spinning.

**04.7060 Abnormal spins.** When a spin is obtained by movements of the controls which the inspector considers to be abnormal and unjustifiably severe for operating maneuvers, the use of elevator and rudder will be permitted for recovery after 6 turns. An airplane of this type will be acceptable insofar as spin characteristics are concerned provided recovery can be made in not more than 2 additional turns with ailerons in neutral, and further provided that a normal spin either conforms with the normal requirements or is impossible to perform.

**04.7061** An airplane of more than 4,000 pounds *standard* weight will not be subjected to the spin test unless the flight characteristics of the particular airplane are, in the opinion of the Administrator, such as to indicate the advisability of a spin test.

**04.707 Flutter and vibration.** Wings, tail surfaces, control surfaces and primary structural parts shall be free from flutter or objectionable vibration in all normal attitudes or conditions of flight between the minimum flying speed and the maximum indicated airspeed attained in official flight tests. (See § 04.722.)

**04.707–T Flutter and vibration.** All parts of transport category airplanes shall be free from flutter or excessive vibration under all speed and power conditions appropriate to the operation of the airplane during take-off, climb, level flight, and landing, and during glide at speeds up to the maximum indicated airspeed attained during official flight tests (See § 04.722). There shall be no appreciable buffeting for any flap position at any speed in excess of 10 miles per hour above stalling speed for such position nor shall buffeting at lower speeds be so violent as to interfere with the pilot's control of the airplane or cause discomfort to its occupants.

**04.708 Ground and water characteristics.** Landplanes shall be maneuverable on the ground and shall be free from dangerous ground looping tendencies and objectionable taxiing characteristics. The seaworthiness and handling characteristics of seaplanes and amphibians shall be demonstrated by tests deemed appropriate by the Administrator. (See § 04.452 for water stability requirements.)

**04.71 Modified performance requirements for air carrier airplanes not certificated in the transport category.** The weight of any multi-engine air carrier aircraft manufactured pursuant to a type certificate issued prior to January 1, 1941, and which aircraft is being operated in accordance with the requirements of Part 61, may be increased beyond the values corresponding to the landing speed specified in § 04.700 and take-off requirements of § 04.701, subject to the following conditions:

**04.710** The increased weight shall be known as the provisional weight (§ 04.103). The *standard* weight (§ 04.102) shall be the maximum permissible weight for all operations other than those in accordance with the requirements of Part 61. The *provisional* weight shall be the maximum permissible weight for any operation.

**04.711** Compliance with all the airworthiness requirements except landing speed and take-off is required at the *provisional* weight, except that the *provisional* weight may exceed the

*design* weight on which the structural loads for the landing conditions are based by an amount not greater than 15 percent, provided that the airplane is shown to be capable of safely withstanding the ground or water shock loads incident to taking-off at the *provisional* weight.

**04.712** The aircraft shall be provided with suitable means for the rapid and safe discharge of a quantity of fuel sufficient to reduce its weight from the *provisional* weight to the *standard* weight.

**04.713** In no case shall the provisional weight exceed a value corresponding to a landing speed of 5 miles per hour in excess of that specified in § 04.700, a take-off distance of 1,500 feet in the case of landplanes, or a take-off time of 60 seconds in the case of seaplanes.

**04.714** Aircraft engaged in operations in accordance with the requirements of Part 61 shall be certificated for the weight at which they comply with the take-off and other performance provisions of those regulations for the particular operation involved provided that such certified weight shall not exceed the provisional weight. It may, however, be less than the provisional or *standard* weights, dependent upon the ground or water facilities and the nature of the route flown.

**04.72 Performance tests.**

**04.720 General.** Compliance with the foregoing performance requirements shall be demonstrated by means of suitable flight tests of the type airplane. Computations may be used to estimate the effects of minor changes. Additional information concerning the performance characteristics of air carrier airplanes is specified in § 04.73. Such characteristics shall be determined by direct flight testing, or by methods combining basic flight tests and calculations. All performance characteristics shall be corrected to standard atmospheric conditions and zero wind. Methods of performance calculation and correction employed shall be subject to the approval of the Administrator.

**04.7200** The applicant shall provide a person holding an appropriate commercial pilot certificate to make the flight tests, but a designated inspector of the Administrator may pilot the airplane during such parts of the tests as he may deem advisable.

**04.7201** In the event that the applicant's test pilot is unable or unwilling to conduct any of the required flight tests, the tests shall be discontinued until the applicant furnishes a competent pilot.

**04.7202** Parachutes shall be worn by members of the crew during the flight tests.

**04.7203.** The applicant shall submit to the inspector of the Administrator a report covering all computations and tests required in connection with calibration of flight instruments and correction of test results to standard atmospheric conditions. The inspector will conduct any flight tests which appear to him to be necessary in order to check the calibration and correction report or to determine the airworthiness of the airplane.

**04.721 Loading conditions.** The loading conditions used in performance tests shall be such as to cover the range of loads and center of gravity positions for which the airplane is to be certificated.

**04.7210 Use of ballast.** Ballast may be used to enable airplanes to comply with the flight requirements as to longitudinal stability, balance and landing, in accordance with the following provisions:

**04.72100** (*a*) Ballast shall not be used for this purpose in airplanes having a gross weight of less than 5,000 pounds nor in airplanes with a total seating capacity of less than 7 persons.

**04.72101** (*b*) The place or places for carrying ballast shall be properly designed and installed and plainly marked.

**04.72102** (*c*) The loading schedule which will accompany each certificate issued for an airplane requiring special loading of this type shall be conspicuously posted in either the pilot's compartment or in or adjacent to the ballast compartments and strict compliance therewith will be required of the airplane operator.

**04.7211 Fuel to be carried.** When low fuel adversely affects balance or stability, the airplane shall be so tested as to simulate the condition existing when the amount of fuel on

board does not exceed one gallon for every 12 maximum (except take-off) horsepower of the engine or engines installed thereon. When the engine is limited to a lower power, the latter shall be used in computing low fuel.

**04.722 Maximum airspeed.** The flight tests shall include steady flight in relatively smooth air at the design gliding speed ($V_g$) for which compliance with the structural loading requirements (§ 04.21) has been proved, except that they need not involve speeds in excess of 1.33 $V_L$ (§ 04.111), provided that the operation limits are correspondingly fixed (see § 04.743). When high-lift devices having nonautomatic operation are employed, the tests shall also include steady flight at the design flap speed $V_f$ (§ 04.114), except that they need not involve speeds in excess of 2 $V_{sf}$ (see § 04.113). In cases where the high-lift devices are automatically operated, the tests shall cover the range of speeds within which the devices are operative.

**04.723 One engine inoperative performance.** Multiengine airplanes shall be flight tested at such altitudes and weights as are necessary, in the opinion of the Administrator, to prepare accurate data to show climbing performance within the range of weight for which certification is sought, with the critical engine inoperative and each other engine operating at not more than maximum except take-off power. Such data when approved by the Administrator shall be kept in the airplane at all times during flight in a place conveniently accessible to the pilot.

**04.724 Airspeed indicator calibration.** In accordance with § 04.5800, the airspeed indicator of the type airplane shall be calibrated in flight. The method of calibration used shall be subject to the approval of the Administrator.

**04.725 Check of fuel system.** The operation of the fuel system shall be checked in flight to determine its effectiveness under low fuel conditions and after changing from one supply tank to another. (See § 04.620.) For such tests low fuel is defined as approximately 15 minutes' supply in each tank tested at the maximum (except take-off) power certified.

**04.73 Performance characteristics of air carrier aircraft.** No air carrier shall operate aircraft in scheduled air transportation unless data shall have been submitted to and approved by the Administrator, covering the determination of such performance characteristics, in addition to those specified in §§ 04.70, 04.71, and 04.72, as are, in the opinion of the Administrator, necessary to determine the ability of such aircraft to safely perform the type of operation which the air carrier proposes to conduct. The method used for the determination of such ability shall be subject to the approval of the Administrator.

**04.74 Operation limitations.**

**04.740 Weight.** Non-air-carrier airplanes may be certificated at a maximum authorized weight which is not sufficient to permit carrying simultaneously the full fuel and full pay load, provided that such weight shall be sufficient to provide a gasoline load of at least 0.15 gallon per certified maximum (except take-off) horsepower, with all seats occupied and with sufficient oil for this amount of fuel.

**04.741 Provisional weight (Air carrier airplanes).** (See § 04.71.)

**04.742 Center of gravity limitations.** The maximum variation in the location of the center of gravity for which the airplane is certificated to be airworthy shall be established. Means shall be provided, when necessary in the opinion of the Administrator, by which the operator is suitably informed of the permissible loading conditions which result in a center of gravity within the certified range.

**04.743 Airspeed limitations.** Maximum operation limitations will be incorporated in the aircraft certificate and will specify the indicated airspeeds which shall not be exceeded in level and climbing flight (§ 04.111), in gliding and diving flight, and with flaps extended. The values in gliding flight and with flaps extended will be 10 percent less than the corresponding maximum airspeeds attained in flight tests in accordance with § 04.722.

**04.744 Powerplant limitations.** Maximum operational limitations will be incorporated in the aircraft certificate and will specify powerplant outputs on take-off (§ 04.260), in climbing flight, and for all operations other than take-off and climbing flight (§ 04.105). The output, except for take-off, shall not exceed that corresponding to the maximum (except take-off) rating

of the engine installed. For the above purposes no specified output will be in excess of that corresponding to the limits imposed by either the pertinent engine or propeller certification. (See §§ 04.60 and 04.61.)

**04.75–T Performance requirements for transport category airplanes.** The following requirements shall apply in place of §§ 04.700 to 04.7061, inclusive:

**04.750–T Minimum requirements for certification.** An airplane may be certificated under the provisions of § 04.75–T, upon there having been established, in accordance with the terms of that section:

(*a*) A maximum take-off weight at sea level;

(*b*) A maximum landing weight at sea level;

(*c*) A maximum one-engine—inoperative operating altitude (as defined in § 04.7513–T), which shall be at least 5,000 feet at a weight equal to the maximum sea level take-off weight;

(*d*) Take-off characteristics at maximum sea level take-off weight, and landing characteristics at maximum sea level landing weight, in accordance with the provisions of §§ 04.7532–T and 04.7533–T; and

(*e*) Compliance with the requirements of all other applicable parts of the Regulations.

If a certificate is issued under these conditions, it may be amended from time to time to include landing and take-off weights over an increased range of altitudes, and other pertinent performance data, including additional landing and take-off characteristics obtained in accordance with the provisions of §§ 04.7532–T and 04.7533–T.

**04.751–T Definitions.**

**04.7511–T Stalling speeds.** In the following sub-sections of § 04.75–T:

$V_{s_0}$ denotes the true indicated stalling speed of the airplane in miles per hour with engines idling, throttles closed, propellers in low pitch, landing gear extended, flaps in the "landing position," as defined in § 04.7512–T, cowl flaps closed, center of gravity in the most unfavorable position within the allowable landing range, and the weight of the airplane equal to the weight in connection with which $V_{s_0}$ is being used as a factor to determine a required performance.

$V_{s_1}$ denotes the true indicated stalling speed in miles per hour with engines idling, throttles closed, propellers in low pitch, and with the airplane in all other respects (flaps, landing gear, etc.) in the condition existing in the particular test in connection with which $V_{s_1}$ is being used.

**04.7512–T Flap positions.** The flap positions denoted respectively as the landing position, approach position, and take-off position are those provided for in § 04.434–T, and may be made variable with weight and altitude in accordance with that section.

**04.7513–T Maximum one-engine-inoperative operating altitude** (to be determined in complying with § 04.723) shall be the altitude in standard air at which the steady rate of climb in feet per minute is 0.02 $V_{s_0}^2$ with the critical engine inoperative, its propeller stopped, all other engines operating at the maximum-except-take-off power available at such altitude, the landing gear retracted, and the flaps in the most favorable position.

**04.752–T Weights.** The maximum take-off weight and maximum landing weight shall be established by the applicant and may be made variable with altitude. The maximum take-off weight for any altitude shall not exceed the maximum design weight used in the structural loading conditions for flight loads (§ 04.21), and shall not exceed the design weight used in the structural loading conditions for ground or water loads (§§ 04.24 and 04.25, respectively) by a ratio of more than 1.15. The maximum landing weight for any altitude shall not exceed the design weight used in the structural loading conditions for ground or water loads.

**04.7520–T Fuel dumping provisions.** If the maximum take-off weight for any altitude exceeds the maximum landing weight for the same altitude, adequate provision shall be made, in accordance with § 04.6, for the rapid and safe dumping during flight of a quantity of fuel sufficient to reduce the weight of the airplane from such maximum take-off weight to such maximum landing weight. Compliance with this requirement shall be shown by dumping suitable colored fluids and fuel in flight tests in the following conditions:

(*a*) Level flight at a speed of 2.0 $V_{s_1}$;

(*b*) climb at a speed of 1.4 $V_{s_1}$ with 75 per cent of maximum-except-take-off power;

(*c*) glide with power off at a speed of 1.4 $V_{s_1}$.

In conditions (*a*) and (*b*), the time required to dump the necessary amount of fuel shall not exceed 10 minutes. During such tests, the dumped fluid shall not come in contact with any portion of the aircraft or adversely affect its control, nor shall any fumes from such fluid enter any portion of the aircraft.

**04.753–T Required performance and performance determinations.** Performance data shall be corrected to standard atmosphere and still air where such corrections are applicable. Performance data may be determined by calculation from basic flight tests if the results of such calculation are substantially equal in accuracy to the results of direct tests.

**04.7530–T Stalling speed requirements.** (*a*) $V_{s_0}$ at maximum landing weight shall not exceed 80 miles per hour.

(*b*) $V_{s_1}$ at maximum landing weight, flaps in the approach position, landing gear extended, and center of gravity in the most unfavorable position permitted for landing, shall not exceed 85 miles per hour.

**04.7531–T Climb requirements.** In the climb tests required by this section, the engine cowl flaps, or other means of controlling the engine cooling air supply, shall be in a position which will provide adequate cooling with maximum-except-take-off power at best climbing speed under standard atmospheric conditions.

(*a*) *Flaps in landing position.* The steady rate of climb in feet per minute, at any altitude within the range for which landing weight is to be specified in the certificate, with the weight equal to maximum landing weight for that altitude, all engines operating at the take-off power available at such altitude, landing gear extended, center of gravity in the most unfavorable position permitted for landing, and flaps in the landing position, shall be at least 0.07 $V_{s_0}^2$.

(*b*) *Flaps in approach position.* The steady rate of climb in feet per minute, at any altitude within the range for which landing weight is to be specified in the certificate, with the weight equal to maximum landing weight for that altitude, the critical engine inoperative, its propeller stopped, all other engines operating at the take-off power available at such altitude, the landing gear retracted, center of gravity in the most unfavorable position permitted for landing, and the flaps in the approach position, shall be at least 0.04 $V_{s_0}^2$.

(*c*) *Flaps in take-off position.* The steady rate of climb in feet per minute, at any altitude within the range for which take-off weight is to be specified in the certificate, with the weight equal to maximum take-off weight for that altitude, the speed equal to the minimum take-off climb speed permitted in § 04.75320–T (b), the critical engine inoperative, its propeller windmilling with the propeller control in a position which would allow the engine (if operating normally and within approved limits) to develop at least 50 percent of maximum-except-take-off engine speed, all other engines operating at the take-off power available at such altitude, the landing gear retracted, center of gravity in the most unfavorable position permitted for take-off, and the flaps in the take-off position, shall be at least 0.035 $V_{s_1}^2$.

**04.7532–T Take-off determination.** The following take-off data shall be determined over such range of weights and altitudes as the applicant may desire, with a constant take-off flap position for a particular weight and altitude, and with the operating engines at not more than the take-off power available at the particular altitude. These data shall be based on a level take-off surface with zero wind.

**04.75320–T Speeds.** (a) Critical-engine-failure speed, denoted by $V_1$, is a true indicated airspeed, chosen by the applicant but in any case not less than the minimum speed at which the controllability is adequate to proceed safely with the take-off, using normal piloting skill, when the critical engine is suddenly made inoperative.

(*b*) Minimum take-off climb speed, denoted by $V_2$, is a true indicated airspeed chosen by the applicant, which shall permit the rate of climb required in § 04.7531–T (c) but which shall not be less than 1.20 $V_{s_1}$ for two-engined airplanes, or 1.15 $V_{s_1}$ for airplanes having more than two engines, or less than 1.10 times the minimum speed at which the airplane is fully controllable in flight using normal piloting skill when the critical engine is suddenly made inoperative.

**04.75321–T Take-off path.** The lengths and slopes of segments of the take-off path, and the location of critical points on the complete path shall be determined in accordance with

the following conditions and assumptions. The location of the points defined below shall be expressed in terms of the horizontal and vertical distances from the starting point.

(*a*) Starting point. The point from which a standing start is made with all engines operating.

(*b*) Critical-engine-failure point. The point at which the airplane attains speed $V_1$ (critical engine failure speed) when accelerated from point (*a*) with all engines operating.

(*c*) Accelerate-and-stop point. The point on the take-off surface at which the airplane can be brought safely to a stop if all engines are cut at point (*b*).

(*d*) Start-of-climb point. The point on or just clear of the take-off surface at which the airplane attains speed $V_2$ (take-off-climb-speed) when the critical engine is made inoperative with its propeller windmilling in low pitch at point (*b*).

The take-off acceleration segment, (*a*) to (*d*), shall be determined by making a continuous run up to speed $V_2$ with the critical engine cut at point (*b*).

(*e*) Retraction-completion point. The point at which landing gear retraction is completed when retraction is initiated not earlier than point (*d*).

The initial climb segment, (*d*) to (*e*), shall be assumed to correspond to the rate of climb at speed $V_2$ with landing gear extended and windmilling propeller in low pitch.

The second climb segment, beginning at point (*e*), shall be assumed to correspond to the rate of climb at speed $V_2$ with landing gear retracted and windmilling propeller in high pitch, as defined in § 04.7531–T (c). This segment may continue indefinitely or may end at point (*g*) in accordance with paragraph (*g*) following.

(*f*) 50-foot height point. The point at which the airplane attains a height of 50 feet (above the take-off surface) along the take-off flight path defined herein.

(*g*) Feathering-completion point. The point where feathering or stopping of the inoperative propeller is completed, if the applicant desires to include this step in the take-off determination. It shall be assumed that the decision to feather or stop is made not earlier than the instant of attaining point (*f*).

In the event that it is desired to include propeller feathering or stopping in the take-off path, the final climb segment, beginning at point (*g*), shall be assumed to correspond to the rate of climb at speed $V_2$ with landing gear retracted and the propeller of the inoperative engine feathered or stopped.

**04.7533–T Landing determination.** The horizontal distance required to land and come to a complete stop from a point at a height of 50 feet above the landing surface shall be determined for such range of weights and altitudes as the applicant may desire. In making this determination:

(*a*) Immediately prior to reaching the 50-foot altitude, a steady gliding approach shall have been maintained, with a true indicated airspeed of at least 1.3 $V_{s_0}$.

(*b*) The nose of the airplane shall not be depressed, nor the power increased, after reaching the 50-foot altitude. At all times during and immediately prior to the landing, the flaps shall be in the landing position, except that after the airplane is on the landing surface and the true indicated airspeed has been reduced to not more than 0.9 $V_{s_0}$ the flap position may be changed.

(*c*) The operating pressures on the braking system shall not be in excess of those approved by the manufacturer of the brakes.

(*d*) The brakes shall not be used in such manner as to produce excessive wear of brakes or tires.

(*e*) The landing shall be made in such manner that there is no excessive vertical acceleration, no tendency to bounce, nose over, porpoise, ground loop, or water loop, and in such manner that its reproduction shall not require any exceptional degree of skill on the part of the pilot, or exceptionally favorable conditions. If this last condition (with respect to exceptional skill or favorable conditions) is not met, the distance to be determined shall be that considered to correspond to a piloting technique normally usable.

**04.754–T Flight characteristics.** There shall be no flight characteristic which makes the airplane unairworthy. The airplane shall also meet the following requirements under all critical loading conditions within the range of center of gravity, and, except as provided in 04.7541 (d), at the maximum weight for which certification is sought.

**04.7540–T Controllability and maneuverability.** The airplane shall be controllable and maneuverable during take-off, climb, level flight, glide, and landing, and it shall be possible to make a smooth transition from one flight condition to another, without requiring an exceptional degree of skill, alertness, or strength on the part of the pilot, under all conditions of operation probable for the type, including those conditions normally encountered in the event of sudden failure of any engine. It shall be possible, with power off, with flaps either retracted or in the landing position, with the center of gravity in the most unfavorable location within the certificated range, and with the airplane trimmed for a speed of 1.4 $V_{s_1}$, to change the flap position to the opposite extreme, to make a sudden application of take-off power on all engines, or to change the speed to any value between 1.10 $V_{s_1}$ and 1.70 $V_{s_1}$, without requiring a change in the trim control or the exertion of more control force than can readily be applied with one hand for a short period. It shall not be necessary to use exceptional piloting skill in order to prevent loss of altitude when flap retraction from any position is initiated during steady horizontal flight at 1.1 $V_{s_1}$, with simultaneous application of not more than maximum-except-take-off power.

**04.7541–T Trim.** The means used for trimming the airplane shall be such that after being trimmed and without further pressure upon or movement of either the primary control or its corresponding trim control by the pilot or the automatic pilot, the airplane will maintain:

(*a*) Lateral and directional trim under all conditions of operation consistent with the intended use of the airplane, including operation at any speed from best rate of climb speed to high speed and operation in which there is greatest lateral variation in the distribution of the useful load;

(*b*) Longitudinal trim, under the following conditions:

(1) During climb at the best rate of climb speed with maximum-except-take-off power.

(2) During a glide with power off at a speed not in excess of 1.4 $V_{s_1}$, and

(3) During level flight at any speed from 90 percent of high speed to the sum of $V_{s_1}$ and 20 percent of the difference between high speed and $V_{s_1}$;

(*c*) Rectilinear climbing flight with the critical engine inoperative, each other engine operating at maximum-except-take-off power and the best rate of climb speed under such conditions;

(*d*) Rectilinear flight with any two engines inoperative and each other engine operating at maximum-except-take-off power under the following conditions:

(1) With the weight of the airplane not more than that at which there is a speed range in level flight of not less than 10 miles per hour;

(2) With the speed of the airplane not more than the high speed obtained under the conditions specified in (1) less 10 miles per hour.

**04.7542–T Stability.** The airplane shall be longitudinally, directionally, and laterally stable in accordance with the following provisions. Suitable stability and control "feel" may be required in other conditions normally encountered in service if flight tests show such stability to be necessary for safe operation.

**04.75420–T Static longitudinal stability.** In the flight conditions described in the following sub-section 04.754200–T:

(*a*) At any speed which can be obtained without excessive control force and which is more than 10 miles per hour above or below the specified trim speed, but not greater than the appropriate maximum permissible speed or less than the minimum speed in steady unstalled flight, the characteristics of the elevator control forces and friction shall be such that:

(*1*) A pull is required to maintain speeds below the specified trim speed and a push to maintain speeds above the specified trim speed.

(*2*) The control will, when unrestrained by the pilot, move continuously toward its original trim position.

(*b*) Where a stable slope of the stick force versus speed curve is specified, any decrease in speed below trim speed shall require an increase in the steady pull on the elevator control and any increase in speed above trim speed shall require an increase in the steady push on the control. Such slope shall be between such limits that any substantial change in speed is clearly perceptible to the pilot through a resulting change in stick force, and that the stick force required to produce necessary changes in speed does not reach excessive values.

**04.754200–T Specific stability conditions.** (*a*) *Landing.* With flaps in the sea level landing position, the landing gear extended, maximum sea level landing weight, the airplane trimmed at 1.4 $V_{s_1}$ and throttles closed, the stick force curve shall have a stable slope at all speeds between 1.1 $V_{s_1}$ and 1.8 $V_{s_1}$.

(*b*) *Approach.* With flaps in sea level approach position, landing gear retracted, maximum sea level landing weight, the airplane trimmed at 1.4 $V_{s_1}$ and with power sufficient to maintain level flight at this speed, the stick force curve shall have a stable slope at all speeds between 1.1 $V_{s_1}$ and 1.8 $V_{s_1}$.

(*c*) *Climb.* With flaps retracted, landing gear retracted, maximum sea level take-off weight, 75 percent of maximum-except-take-off power and with the airplane trimmed at 1.4 $V_{s_1}$, the stick force curve shall have a stable slope at all speeds between 1.2 $V_{s_1}$ and 1.6 $V_{s_1}$.

(*d*) *Cruising.* With flaps retracted, maximum sea level take-off weight, 75 percent of maximum-except-take-off power, and with the airplane trimmed for level flight, the stick force curve shall have a stable slope at all speeds obtainable with reasonable stick forces between:

(1) 1.2 $V_{s_1}$ and the maximum permissible speed, when the landing gear is retracted;

(2) 1.2 $V_{s_1}$ and the level flight speed, when the landing gear is extended.

**04.75421–T Dynamic longitudinal stability.** The airplane shall not be dynamically unstable longitudinally, as shown by the damping of the normal long period oscillation, under any flight condition that is likely to be maintained for more than 10 minutes in ordinary service. Compliance with this requirement shall be demonstrated under at least the following conditions:

(*a*) During level flight with 75 percent of maximum-except-take-off power.

(*b*) During a climb with 75 percent of maximum-except-take-off power at a speed equal to 75 percent of that obtained in item (*a*) above.

Any short period oscillation occurring between stalling speed and maximum permissible speed shall be heavily damped with the primary controls in a fixed position.

**04.75422–T Directional and lateral static stability.** The static directional stability, as shown by the tendency to recovery from a skid with rudder free, shall be positive for all flap positions and symmetrical power conditions, and for all speeds from 1.2 $V_{s_1}$ up to the maximum permissible speed. The static lateral stability, as shown by the tendency to raise the low wing in a sideslip, shall be positive within the same limits.

**04.7543–T Stalling.** With power off, and with that power necessary to maintain level flight with flaps in approach position at a speed of 1.6 $V_{s_1}$, maximum landing weight, flaps and landing gear in any position, and center of gravity in the least favorable position for recovery, it shall be possible to produce and to correct roll and yaw by unreversed use of the aileron and rudder controls up to the time when the airplane pitches in the maneuver described below. During the pitching and recovery portions of the maneuver it shall be possible to prevent appreciable rolling or yawing by normal use of the controls.

In demonstrating this quality, the order of events shall be:

(*a*) With trim controls adjusted for straight flight at a speed of 1.4 $V_{s_1}$ reduce speed by means of the elevator control until the speed is steady at slightly above stalling speed; then

(*b*) Pull elevator control back at a normal rate until a stall is produced as evidenced by an uncontrollable downward pitching motion of the airplane, or until the control reaches the stop. Normal use of the elevator control for recovery may be made after such pitching motion is unmistakably developed.

In any case, the airplane shall not pitch excessively before recovery is completed.

The airplane shall be recoverable without difficulty or the use of power from the inoperative engine when it is stalled with the critical engine inoperative and the remaining engines operating at 75 per cent of maximum-except-take-off power.

**04.755–T Airplane operating manual.** There shall be furnished with each airplane a copy of a manual which shall contain such information regarding the operation of the airplane as the Administrator may require, including, but not limited to, the following:

(*a*) All performance data secured under § 04.7513–T to 04.7533–T, inclusive, together with any pertinent descriptions of the conditions, airspeeds, etc., under which such data were determined;

(*b*) Adequate instructions for the use and adjustment of the flap controls under § 04.434–T.

(*c*) The indicated airspeeds corresponding to those determined in § 04.75320–T, together with pertinent discussion of procedures to be followed if the critical engine becomes inoperative on take-off.

(*d*) A discussion of any significant or unusual flying or ground-handling characteristics, knowledge of which would be useful to a pilot not previously having flown the airplane.

**04.8 (Unassigned).**

## 04.9 MISCELLANEOUS REQUIREMENTS

**04.90 Standard weights.** In computing weights the following standard values shall be used.

| | |
|---|---|
| Gasoline | 6 lbs. per gallon. |
| Lubricating Oil | 7.5 lbs. per gallon. |
| Crew and Passengers | 170 lbs. per person, unless otherwise specified by the Administrator. |
| Parachutes | 20 lbs. each. |

**04.91 Leveling means.** Adequate means shall be provided for easily determining when the aircraft is in a level position.

| Stalling speed | Rate of Climb | | |
|---|---|---|---|
| | $0.02V_s^2$ | $0.04V_s^2$ | $0.07V_s^2$ |
| 50 | 50 | 100 | 175 |
| 55 | 61 | 121 | 212 |
| 60 | 72 | 144 | 252 |
| 65 | 85 | 169 | 296 |
| 70 | 98 | 196 | 343 |
| 75 | 113 | 225 | 394 |
| 80 | 128 | 256 | 448 |

**TABLE 04–1.—Symmetrical Flight Conditions (Flaps Retracted)**

| 1. Condition | I | II | III | IV | V | VI |
|---|---|---|---|---|---|---|
| 2. Reference Part 04 | .2131 | .2132 | .2133 | .2134 | .2135 | .2136 |
| 3. Design speed (see § 04.211) | $V_L$ | $V_L$ | $V_g$ | $V_g$ | $V_L$ | $V_\theta$ |
| 4. Gust Velocity, *U, fps* [1] [2] | +30 | −30 | +15 | −15 | | |
| 5. $\Delta n$ (*a*) Gust [3] | § 04.2121 | § 04.2121 | § 04.2121 | § 04.2121 | $-0.5\Delta n_{I_a}$ | |
| $\Delta n$ (*b*) Maneuvering | Fig. 04–3 | | Fig. 04–3 | | $-0.25\Delta n_{I_b}$ | |
| 6. *Limit* Load Factor, *n*, When line 5 gives two values of $\Delta n$, use larger | $1+\Delta n_I$ | $1+\Delta n_{II}$ | $1+\Delta n_{III}$ | $1+\Delta n_{IV}$ | $-1+\Delta n_V$ | |
| 7. Minimum value of *n* | 2.50 | None | 2.50 | None | −1.5 | None |
| 8. Minimum Yield Factor of Safety, $j_y$ | 1.0 | 1.0 | 1.0 | 1.0 | 1.0 | 1.0 |
| 9. Minimum Ultimate Factor of Safety, $j_u$ | 1.5 | 1.5 | 1.5 | 1.5 | 1.5 | 1.5 |

[1] Feet per second.
[2] + means upward, − means downward.
[3] May be limited by maximum dynamic lift coefficient obtainable under sudden changes of angle of attack.

**TABLE 04–2.—Symmetrical Flight Conditions (Flaps Extended)**

| 1. Condition | VII | VIII | IX |
|---|---|---|---|
| 2. Reference Part 04 | .2141 | .2142 | .2143 |
| 3. Design speed (see § 04.211) | $V_f$ | $V_f$ | $V_f$ |
| 4. Gust velocity, *U, fps* [1] [2] | +15 | −15 | |
| 5. $\Delta n$ [3] | § 04.2121 | § 04.2121 | |
| 6. *Limit* Load Factor, *n* | $1+\Delta n_{VII}$ | $1+\Delta n_{VIII}$ | |
| 7. Minimum value of *n* | 2.00 | None | None |
| 8. Minimum Yield Factor of Safety, $j_y$ | 1.0 | 1.0 | 1.0 |
| 9. Minimum Ultimate Factor of Safety, $j_u$ | 1.5 | 1.5 | 1.5 |

[1] Feet per second.
[2] + means upward, − means downward.
[3] May be limited by maximum dynamic lift coefficient obtainable under sudden changes of angle of attack.

**TABLE 04–3.—Loading Conditions for Horizontal Tail Surfaces**

| 1. Condition | Balancing | Maneuvering | Damping | Tab effects |
|---|---|---|---|---|
| 2. Reference Part 04 | .2210 | .2211 | .2212 | .2213 |
| 3. Design speed (see § 04.211) | | $V_p$ | | $V_L$ |
| 4. Force Coefficient, $C_N$ | | −.55 (down)<br>+.35 (up) | | |
| 5. Average *Limit* Pressure, p. s. f.[1] | | $C_N q_p$[2] | | |
| 6. Chord Distribution | Fig. 04–4 | Fig. 04–5 | Fig. 04–6 | Fig. 04–5[3] |
| 7. Span Distribution | Constant $C_N$ | Constant $C_N$ | Constant $C_N$ | Constant $C_N$[3] |
| 8. *Minimum Average Limit Pressure*, p. s. f.[1] | | 15 | | |
| 9. Special Requirements | None | None | None | None |
| 10. Minimum Yield Factor of Safety, $j_y$ | 1.0 | 1.0 | 1.0 | 1.0 |
| 11. Minimum Ultimate Factor of Safety, $j_u$ | 1.5 | 1.5 | 1.5 | 1.5 |

[1] Over entire horizontal tail.
[2] $q_p$ is the dynamic pressure corresponding to $V_p$, see § 04.118.
[3] Refers to main surface, disregarding tab; uniform pressure distribution may be assumed over tab.

**TABLE 04–4.—Loading Conditions for Vertical Tail Surfaces**

| 1. Condition | Maneuvering | Damping | Gust | Tab effects |
|---|---|---|---|---|
| 2. Reference Part 04 | .2220 | .2221 | .2222 | .2223 |
| 3. Design speed (see § 04.211) | $V_p$[2] | | $V_L$ | $V_L$[4] |
| 4. $C_N$ or Gust | $C_N$=0.45 | | $U$=30 $f_{ps}$ | |
| 5. Average *Limit* Pressure, p. s. f.[1] | $C_N q_p$[2] | | 04.2222(*b*) | |
| 6. Chord Distribution | Fig. 04–5 | Fig. 04–6 | Fig. 04–6[5] | Fig. 04–5[6] |
| 7. Span Distribution | Constant $C_N$ | Constant $C_N$ | Constant $C_N$ | Constant $C_N$[6] |
| 8. Minimum Average *Limit* Pressure, p. s. f.[1] | 12 | | | |
| 9. Special Requirements | § 04.2220(*b*) | None | None | None |
| 10. Minimum Yield Factor of Safety, $j_y$ | 1.0 | 1.0 | 1.0 | 1.0 |
| 11. Minimum Ultimate Factor of Safety, $j_u$ | 1.5 | 1.5 | 1.5 | 1.5 |

[1] Over entire vertical tail.
[2] $q_p$ is the dynamic pressure corresponding to $V_p$, see § 04.118.
[3] See § 04.2220 (*a*) for exception.
[4] See § 04.2223 (*a*) for exception.
[5] See § 04.2222 (*c*).
[6] Refers to main surface, disregarding tab; uniform pressure-distribution may be assumed over tab.

**TABLE 04–5.—Loading Conditions for Ailerons**

| 1. Condition | Maneuvering | Tab effects |
|---|---|---|
| 2. Reference Part 04 | .2230 | .2231 |
| 3. Design Speed (See § 04.211) | [1] $V_p$ | [3] $V'_L$ |
| 4. $C_N$ or Gust | $C_N$=0.45 | |
| 5. Average *Limit* Pressure, p. s. f. | [2] $C_N q_p$ | |
| 6. Chord Distribution | Fig. 04–7 | [4] Fig. 04–7 |
| 7. Span Distribution | Constant $C_N$ | [4] Constant $C_N$ |
| 8. Minimum Average *Limit* Pressure, p. s. f. | 12 | |
| 9. Special Requirements | §04.2230(*b*) | None |
| 10. Minimum Yield Factor of Safety, $j_y$ | 1.0 | 1.0 |
| 11. Minimum Ultimate Factor of Safety, $j_u$ | 1.5 | 1.5 |

[1] See § 04.2230 (a) for exception.
[2] $q_p$ is the dynamic pressure corresponding to $V_p$, see § 04.118.
[3] $V'_L$ is the maximum level flight air speed with any engine inoperative.
[4] Refers to main surface, disregarding tab; uniform pressure distribution may be assumed over tab.

**TABLE 04–6.—Loading Conditions for Control Systems**

(See § 04.230)

| | Elevator | Rudder | | Aileron | Flaps, tabs, etc. |
|---|---|---|---|---|---|
| | | Symmetrical thrust[1] | Unsymmetrical thrust[2] | | |
| 1. Reference Part 04 | .231 | .232 | .232 | .233 | .234 |
| 2. Maximum *Limit* Control Force, pounds | 200 | 200 | 200 | 80 | None |
| 3. Minimum *Limit* Control Force, pounds | Fig. 04–8 | 130 | 200 | Fig. 04–9 | See Ref. |
| 4. Minimum Yield Factor of Safety, $j_y$ | 1.0 | 1.0 | 1.0 | 1.0 | 1.0 |
| 5. Minimum Ultimate Factor of Safety, $j_u$ | 1.5 | 1.5 | 1.5 | 1.5 | 1.5 |

[1] Propeller axes all in plane of symmetry.
[2] Propeller axes not all in plane of symmetry.

## TABLE 04–7.—Additional (Multiplying) Factors of Safety

(See § 04.27)

| Item | Component | Reference Part 04 | Additional Yield factor of safety, $j_y$ | Additional ultimate factor of safety, $j_u$ | May be covered by item No. |
|---|---|---|---|---|---|
| 1. | Fittings (except control system fittings) | .271 | None | 1.20 | 2, 4, 5, 6, 7, 8, 9 |
| 2. | Castings | .272 | None | 2.00 | 7, 8 |
| 3. | Parallel double wires in wing lift truss | .273 | None | 1.05 | 4 |
| 4. | Wires at small angles | .274 | None | See Ref. | |
| 5. | Double drag truss wires | .275 | None | See Ref. | |
| 6. | Torque tubes used as hinges | .276 | None | 1.5 | |
| 7. | Control surface hinges [1] | .277 | None | 6.67 | |
| 8. | Control system joints [1] | .277 | None | 3.33 | |
| 9. | Wire sizes | .278 | None | See Ref. | |
| 10. | Wing lift truss (landing conditions only) | .279 | None | 1.10 | |

[1] For bearing stresses only.

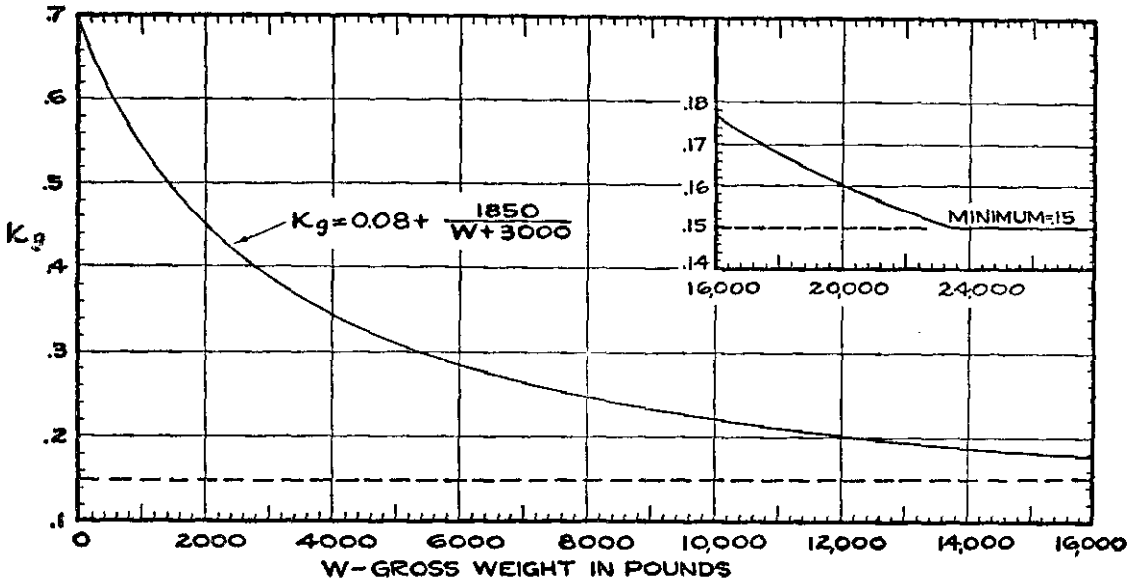


FIG. 04-1 GLIDING SPEED FACTOR

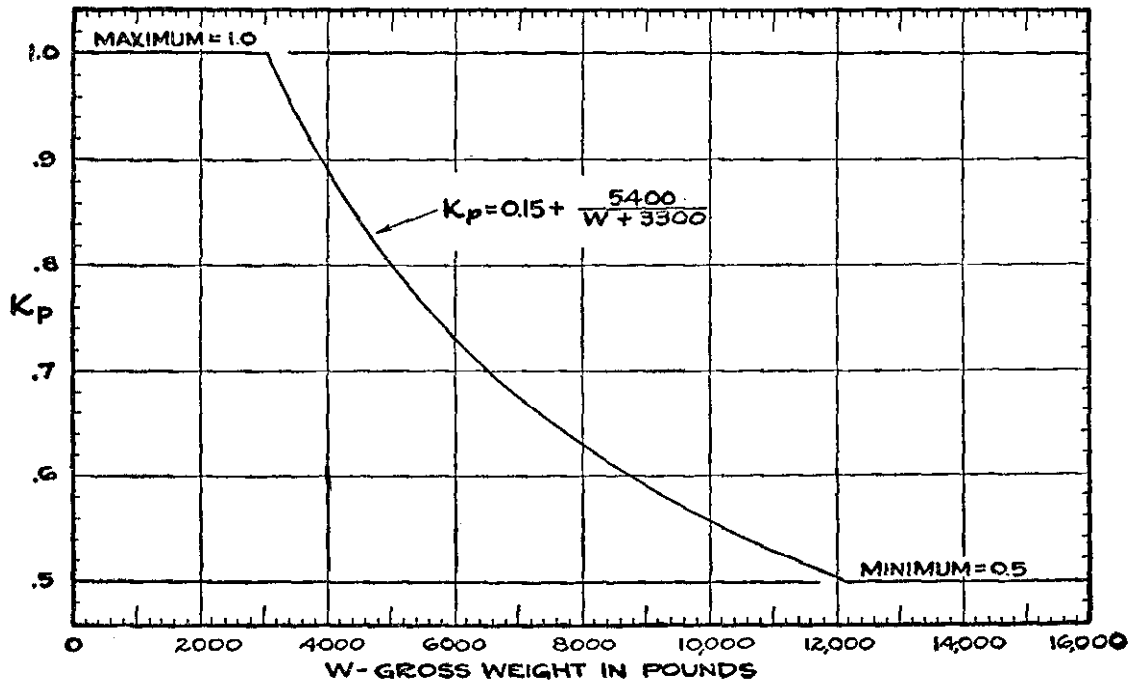


FIG. 04-2 PULL-UP SPEED FACTOR

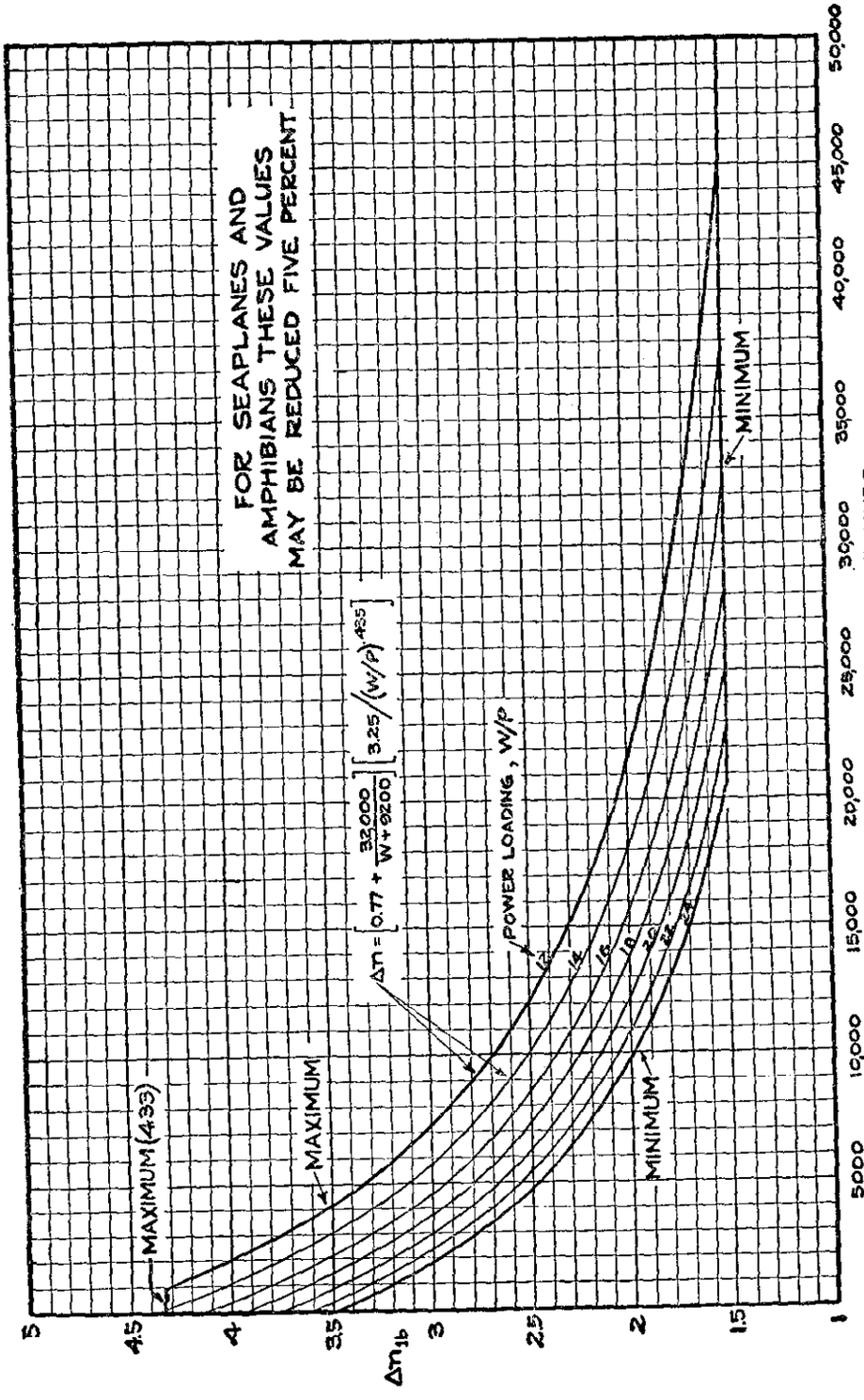


FIG. 04-3 MANEUVERING LOAD FACTOR INCREMENT, CONDITIONS I AND III

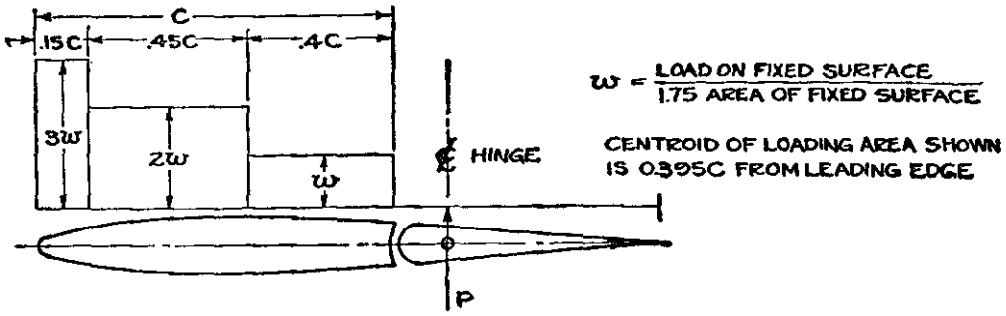


FIG. 04-4 "BALANCING" DISTRIBUTION - HORIZONTAL TAIL

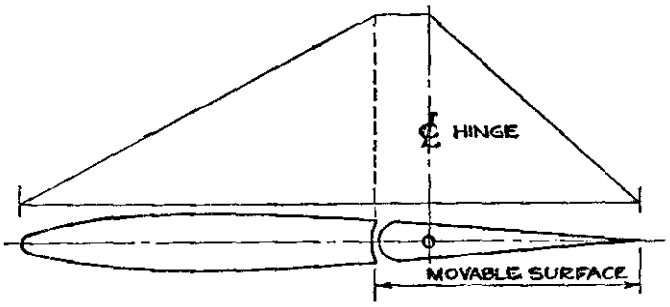


FIG. 04-5 "MANEUVERING" TAIL LOAD DISTRIBUTION

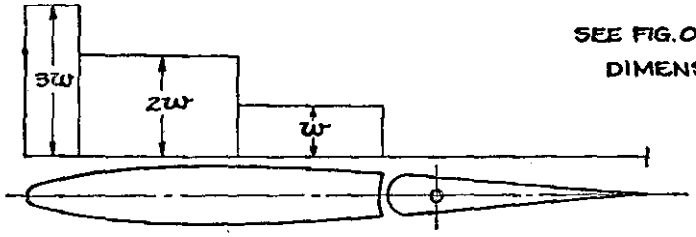


FIG. 04-6 "DAMPING" TAIL LOAD DISTRIBUTION

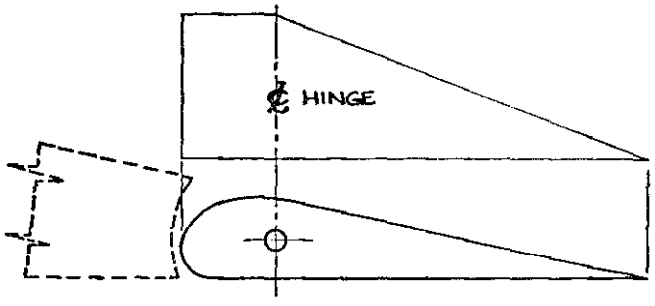


FIG. 04-7 AILERON LOAD DISTRIBUTION

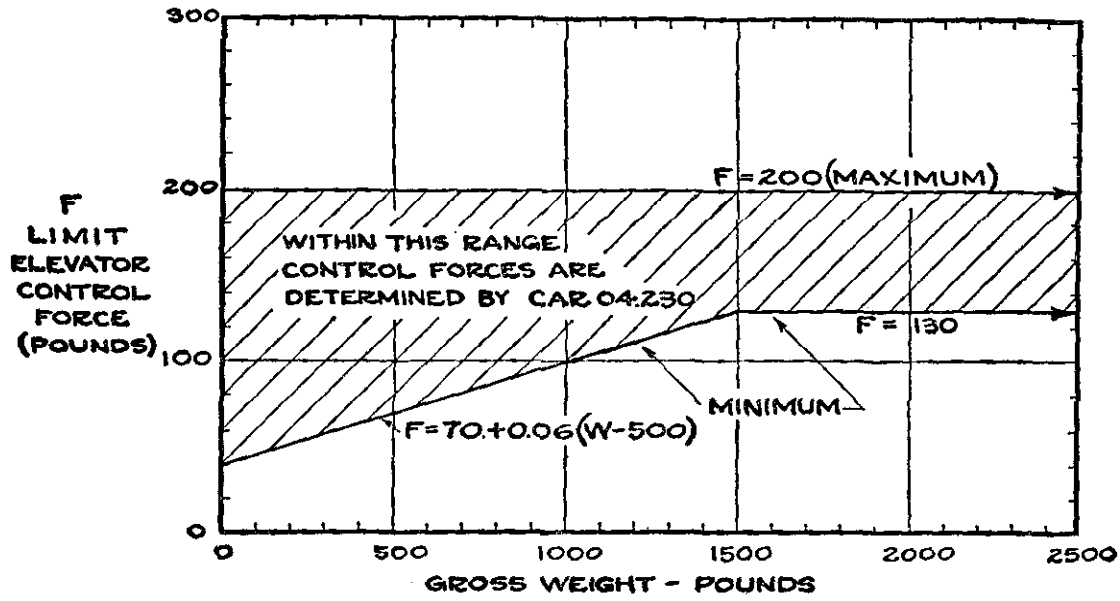


FIG. 04-8 ELEVATOR CONTROL FORCE LIMITS

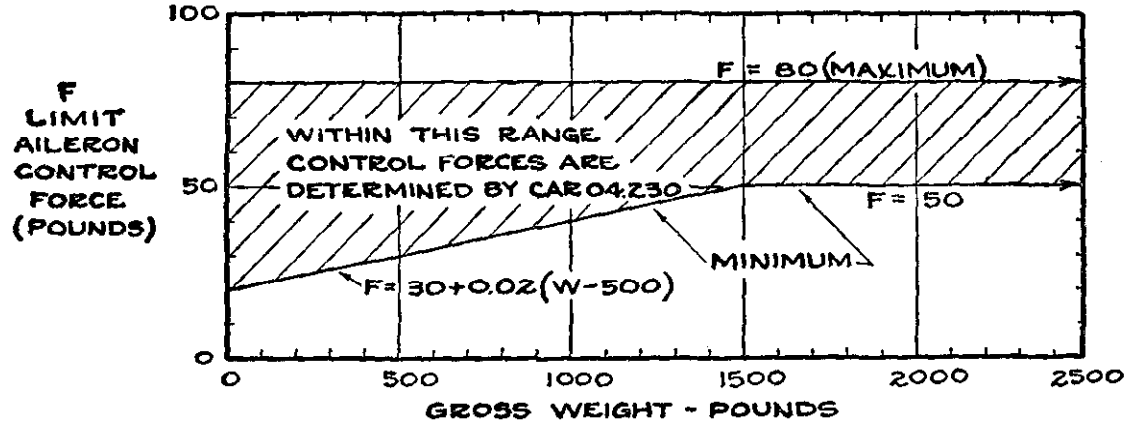


FIG. 04-9 AILERON CONTROL FORCE LIMITS

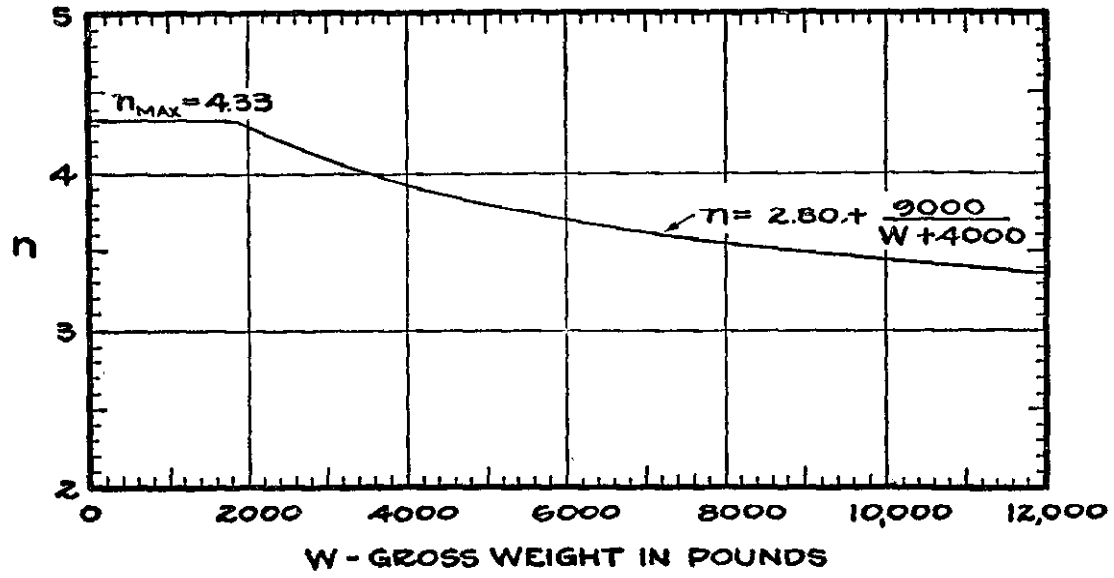


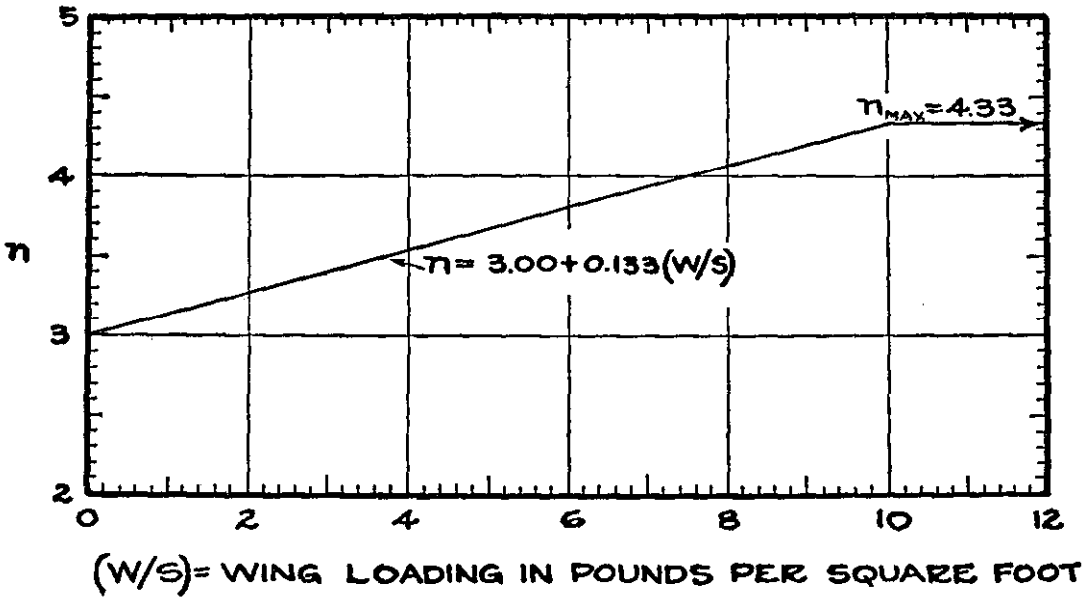


NOTE: USE THE CHART INDICATING THE LOWER VALUE

FIG. 04-10 LIMIT LOAD FACTORS FOR LEVEL AND 3-POINT LANDING CONDITIONS

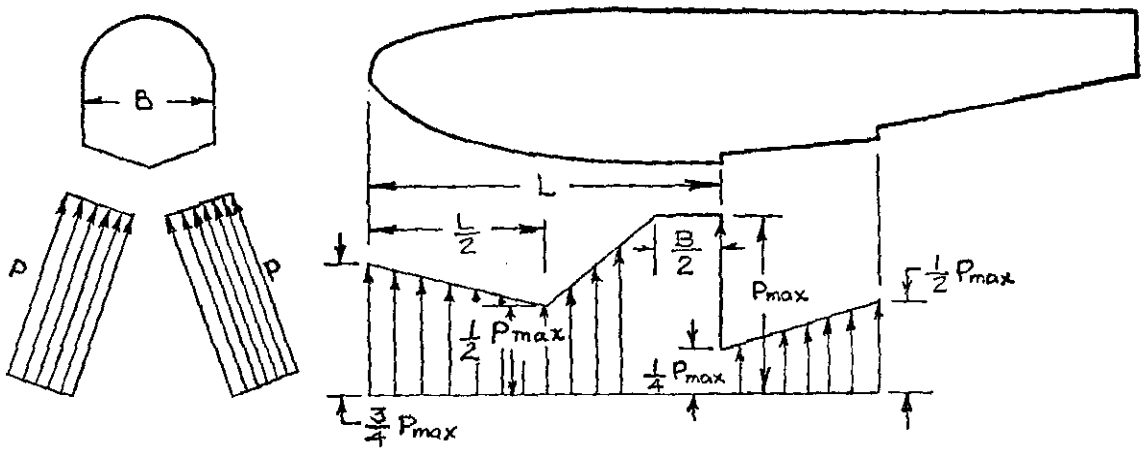


FIG. 04-11 DISTRIBUTION OF LOCAL PRESSURES - BOAT SEAPLANES