MAY 9 1962

Civil Aeronautics Manual 8

DOT LIBRARY
10A SECTION
800 INDEPENDENCE AVE SW
WASHINGTON, DC 20591

Aircraft Airworthiness

Restricted Category

DOT LIBRARY
10A SECTION
800 INDEPENDENCE AVE SW
WASHINGTON, DC 20591

DOT LIBRARY
10A SECTION
800 INDEPENDENCE AVE SW
WASHINGTON, DC 20591

Second Edition

September 1956

U. S. DEPARTMENT OF COMMERCE
SINCLAIR WEEKS, *Secretary*
LOUIS S. ROTHSCHILD, *Under Secretary for Transportation*

CIVIL AERONAUTICS ADMINISTRATION
CHARLES J. LOWEN, *Administrator*

This edition replaces Civil Aeronautics Manual 8, dated January 1, 1951, and Supplements 1 through 4. It contains amendments which became effective as follows:

November 15, 1951
December 25, 1952
November 15, 1953
April 30, 1954
January 20, 1956

For sale by the Superintendent of Documents, U. S. Government Printing Office - Washington 25, D. C.

Introductory Note

The following policies and interpretations of the Administrator of Civil Aeronautics pertain to Part 8 of the regulations of the Civil Aeronautics Board, which became effective October 11, 1950 (15 F. R. 5224, August 12, 1950). The entire Part 8 is repeated here to assist the public in understanding how the Administrator's policies and interpretations apply to the various sections of the Board's regulations.

The administrator's policies and interpretations explain and interpret the Board's regulations, and set forth acceptable procedures and practices for the guidance of the public in complying with the regulations. Other practices which provide equivalent safety to those specified by the Administrator will also be acceptable. Any provisions which are shown to be inapplicable in a particular case will be modified upon request.

The material is arranged to set forth in small type each numbered section of the Board's regulations followed by the related policies and interpretations of the Administrator. The Administrator's sections pertaining to a particular section of the Board's regulations are identified by consecutive dash numbers appended to the regulation section number. Thus section 8.0 means section 8.0 of the Board's regulations, and section 8.0–2 means the second of the Administrator's sections under section 8.0.

Guidance information for use in modifying aircraft for agricultural and similar purposes is contained in CAM 8, Appendix A.

The Administrator's policies and interpretations will be revised from time to time as the need for new or revised interpretations, procedures, or practices are brought to the attention of the CAA.

Because the new Part 8 presents a considerable departure from the previous restricted category airworthiness requirements, the explanatory statement issued by the Civil Aeronautics Board upon adoption of Part 8 is set forth below to explain its background and objectives. In this statement, the terms "currently effective" and "existing requirements" actually refer to the requirements in effect prior to Part 8, since the statement was issued before the effective date of the regulation.

"*Preamble to Part* 8. Currently effective airworthiness parts and Part 43 of the Civil Air Regulations provide for the type and airworthiness certification of aircraft built or modified for special purposes, such as crop dusting, seeding, spraying, and other special purposes. In accordance with current requirements the Administrator may waive such of the basic airworthiness requirements as are rendered inappropriate by the special purposes involved, but he is required to prescribe operating limitations to insure that the operation will have 'an equivalent level of safety' to that of an aircraft operating under an airworthiness certificate for an aircraft category other than restricted. The procedure by which compliance is shown with the restricted category is essentially the same as that required for certification in other airworthiness categories.

"We have been advised that the existing requirements, which were designed primarily to establish an appropriate level of safety for passenger-carrying aircraft, have imposed an unnecessary economic burden and are unduly restrictive for the manufacture and operation of aircraft intended for use in rural, sparsely settled areas outside the usual lanes of air transportation and in which no passengers are to be carried for hire. For such restricted operations where public safety is not endangered it appears unreasonable to require the same level of safety as that required for passenger-carrying aircraft. Therefore, a basic change in Part 8 from current practice has been the elimination of the 'equivalent level of safety' provision from the requirements for restricted category aircraft.

"In addition, the part establishes new standards for the issuance of type certificates for the restricted category, for modifications or existing type certificates, and for issuance of

airworthiness certificates for aircraft intended to be operated for special purposes and for operating limitations to be applicable to such aircraft. It also simplifies the procedure of showing compliance with the restricted category requirements and provides for the tailoring of the operating limitations to the particular purpose for which certification is sought. This part authorizes the Administrator to waive or modify any of the airworthiness requirements of the Civil Air Regulations, either for initial or continued airworthiness, for the standard (passenger-carrying) aircraft categories which he finds inappropriate for the special purpose for which the aircraft is to be used, including individual design requirements, requirements for flight testing, and submittal of engineering data and drawings. In the case of aircraft built for type certification in the restricted category, engineering data, reports, and flight tests will be required but in a greatly simplified manner as compared to the requirements for the passenger-carrying categories. However, it should be noted that nothing in this part is intended to contravene the statutory requirement that the administrator find that the aircraft is 'of proper design, material specification, construction, and performance for safe operation' before issuing a type certificate. (Sec. 603, 52 Stat. 1009, 49 U. S. C. 553.)

"A civil aircraft which has previously been type certificated and subsequently modified for a special purpose may be issued a modified type certificate, and a military aircraft which has been manufactured according to the requirements of, and accepted for use by, a military service of the United States and subsequently modified for a special purpose may be issued a type certificate, when upon inspection the Administrator finds that the modification has been made in accordance with good aeronautical practice and that no feature or characteristic of the aircraft would render it unsafe when operated in accordance with the prescribed limitations. Engineering data, reports, or flight tests would not be required by the provisions of this part, except in cases where the inspection discloses a possible unsafe feature or characteristic.

"Provision is further made whereby an aircraft may be issued an airworthiness certificate in the restricted category and in any one or more of the airworthiness categories prescribed by the Civil Air Regulations, if the applicant shows compliance with the requirements for each category when in the configuration for that category and if the aircraft can be converted from one category to another by the addition or removal of equipment by simple mechanical means. Under such circumstances the Administrator will specify appropriate operating limitations for each category and will specify the approval changes necessary to convert and reconvert the aircraft from one category to another.

"This part is intended to provide the greatest possible flexibility of administration and to place the minimum possible burden consistent with public safety on the applicant for a certificate in the restricted category. While it is anticipated that it will be necessary to supplement this part with administrative policies and manual material, it is intended that such material be directly related to existing airworthiness standards and not take the form of independent administrative rules to be applied in lieu of the basic regulations.

"It will be noted that the Board is currently considering a revision of Parts 1 and 2, and it is contemplated that some of the material contained in this part will be included in that revision.

"Concurrently with the adoption of this part all reference to requirements for certification in the restricted category and to the operating limitations for aircraft so certificated, presently contained in Parts 3, 6, and 43 of the Civil Air Regulations, are being deleted from those parts.

"Interested persons have been afforded an opportunity to participate in the making of this new part, and due consideration has been given to all relevant matter presented.

"In consideration of the foregoing the Civil Aeronautics Board hereby makes and promulgates a new Part 8 of the Civil Air Regulations to read as follows, effective October 11, 1950:"

(Rev. 2/23/54)

Table of Contents

	Section	Page
Applicability of this part	8.0	
Eligible special purposes (*CAA interpretations which apply to sec. 8.0*)	8.0–1	1
Applicability to aircraft previously certificated in the restricted category (*CAA policies which apply to sec. 8.0*)	8.0–2	1
Applicability to aircraft certificated in a category other than restricted category (*CAA policies which apply to sec. 8.0*)	8.0–3	1
Definitions	8.1	
Authorized representative of the Administrator (*CAA interpretations which apply to sec. 8.1 (a) (4)*)	8.1–1	2
Eligibility for type certificate	8.10	
Aircraft of a type not previously type certificated (*CAA policies which apply to sec. 8.10 (a) (1)*)	8.10–1	3
Military type aircraft (*CAA policies which apply to sec. 8.10 (a) (2)*)	8.10–2	3
Aircraft modified from a previously approved type (*CAA policies which apply to sec. 8.10 (b)*)	8.10–3	4
Agricultural aircraft modifications (*CAA policies which apply to sec. 8.10 (b)*)	8.10–4	6
Advertising aircraft modifications (*CAA policies which apply to sec. 8.10 (b)*)	8.10–5	7
Eligibility for airworthiness certificate	8.20	
Issuance of airworthiness certificates for aircraft modified from a previously approved type (*CAA policies which apply to sec. 8.20 (b)*)	8.20–1	7
Issuance of airworthiness certificates for aircraft manufactured under a restricted category type certificate (*CAA policies which apply to sec. 8.20 (b)*)	8.20–2	8
Repairs and alterations (*CAA policies which apply to sec. 8.20 (b)*)	8.20–3	8
Multiple airworthiness certification	8.21	
Multiple airworthiness certification (*CAA policies which apply to sec. 8.21*)	8.21–1	10
Operating limitations; Administrator's authority to prescribe	8.30	
Operating limitations (*CAA policies which apply to sec. 8.30*)	8.30–1	13
Area operating limitations	8.31	
Waiver of operation limitations (*CAA policies which apply to sec. 8.31*)	8.31–1	14
Economic operating limitations	8.32	
Economic operating limitations (*CAA interpretations which apply to sec. 8.32*)	8.32–1	14
Passengers prohibited during special purpose operations	8.33	
Passengers prohibited during special purpose operations (*CAA interpretations which apply to sec. 8.33*)	8.33–1	15
Separate operating limitations for multiple airworthiness certification	8.34	
Operating limitations for multiple airworthiness certification (*CAA policies which apply to sec. 8.34*)	8.34–1	15

Appendix A

Table of Contents

Structural Changes

	Page
General	19
Effects of Alterations on Aircraft	19
Structural	19
Aerodynamic	19
Conversion of a Personal Type Airplane to One for Agricultural Use	19
Ideal Characteristics of an Agricultural Airplane	20
Selection of an Airplane for Modification Purposes	20
Suggested Procedure for Conversion of a Personal Type to an Agricultural Type Airplane	20
General Rules for Proper Alteration of the Aircraft Structure	21
Reinforcement of Open Bays in Primary Structure	21
Cutting Holes in Stressed Skin Structures	22
Changes to or Removal of Stringers or Rings	22
Installation of Power Units for Pumps and Agitators	22
Wind-Driven Units	23
Wind-Driven Unit Controls	23
Wind-Driven Generator Power Source	23
Power Units Locations	23
Adaptation of Automobile Engine Fans	23
Attachment of Hopper or Tank to Primary Structure	23
Boom Installations	24
Corrosion Protection	25

Dispensing Equipment Design Criteria

General	27
Sources of Information on Equipment Design	27
Department of Agriculture	27
Periodicals—Manufacturers of Insecticides—State Universities	27
Civil Aeronautics Administration's Approved Dusting and Spraying Equipment Installations	27
Dispensing Equipment	27
Dusting Equipment Design	28
Hoppers	28
Materials	28
Reinforcing of Hoppers	28
Hopper Seams	28
Hopper Doors (Loading Door)	29
How to Determine the C. G., Volume and Weight of a Hopper	29
Square or Rectangular Design	30
Odd Shaped Designs	31
Any Shape Design (Simple Method)	32
Agitators	32
Venturi	32
Design	33
Construction	33
Installation	33

	Page
Spray Equipment Design	34
Tank Installations	34
Tank Construction	34
Materials	34
Drainage	34
Provisions for Cleaning and Making Repairs	34
Baffling	34
Seams and Sealing	34
Venting	34
Testing	35
Spray Booms	35
Valves, Nozzles, Quick Shutoff Provisions	36
Pumps	36
Cockpit Drainage and Ventilation	36

Powerplant Changes

Effects of Engine Changes on Aircraft Structure	37

Pilot Safety Items

General	39
Visibility	39
Location of Instruments	39
Safety Belts and Harnesses	39
Toxic Materials, Venting of Cockpits, Etc	40
Protection Against Toxic Insecticides and Plant Killers	40
Crash Protection	40
Cockpit Design	40
Overall Design	41

Electrical Systems

Scope	43
Electrical System Considerations	43
General	43
Addition of New Circuits and Equipment	43
Power System Capacity	43
Control Through the Master Switch	43
Protection for New Circuits	43
Switches	43
Master Switch	43
Preventive Maintenance	44
Electrical Power Source Considerations	44
General	44
Storage Batteries	44
Generators	44
Wind-Driven Generators	44
Engine-Driven Generators	44
Generator Control Equipment	44
Electrical Equipment Considerations	45
General	45
Environmental Conditions for Aircraft Electrical Equipment	45
Electrical Cable	45
Criteria for Selection of Cable	45
Electrical Terminals	45
Lights	45
Position Lights	45
Landing Lights	45
Instrument Lights	45
Switches, Rheostats and Other Controls	46

Page

Electrical Installation Considerations 46
General 46
Cable Runs 46
Bonding 46
Terminal Connections 46
Drainage of Water 46
Combustible Fluids, Vapor, and Dusts 46

Fire Prevention

General 47
Sulphur Dust Fires 47
Miscellaneous 47
Sparks From the Engine Exhaust 47
Static Electricity 48
Pressure Between the Hopper Gates and Their Guide Channels 48
Poorly Designed or Improperly Fitting Agitator Shafts 48
Sparks Caused by the Tail Skid While Taxiing 48
Inadequate Ventilation 48
Fuselage and Tail Surface Covering 49
Combustible Liquid Spraying 49
Lines Containing Flammable Fluids 49
Compartments Containing Flammable Liquids 49
Fluid Shutoff Provisions 49

Weight and Balance

General 51
General Effects of Gross Weight Changes 51
Effects of Gross Weight Changes on Aircraft Structure 51
Effects of Gross Weight Changes on Maneuvers 52
Weight and Balance Computations 54
Effect of c. g. Position on Structural Strength 54
Effect of c. g. Position on Nose Wheel and Forward Fuselage Loadings 54
Effect of c. g. Position on Tail Wheel Strength 54
Effect of c. g. Position on Main Wheel Loads 54

Powerplant Installations

Scope 55
Engines 55
Propellers 55
Propeller Vibration 55
Propeller Pitch and Speed Limitations 56
Propeller Replacements 56
Propeller Clearances 56
Fuel and Oil Systems 57
Fuel System 57
Fuel-System Hazards 57
Fuel-System Arrangement 57
Fuel-System Operation 57
Auxiliary Tanks 57
Auxiliary Pumps 58
Transfer Tanks 58
Fuel-Flow Rate for Gravity-Feed Systems 58
Fuel-Flow Rate for Pump Systems 59
Fuel Tanks 59
General 59
Integral-Tank Construction 59
Tank Tests 62

Page

Fuel and Oil Systems—Continued
Fuel System—Continued
Fuel Tanks—Continued
Fuel-Tank Installation 62
Fuel Pumps and Pump Installations 63
Fuel-System Lines, Fittings, and Accessories 63
Oil-System 64
Oil-System Operation 65
Oil-System Arrangement 65
Oil Tanks 65
General 65
Capacity and Expansion Space 65
Outlet 65
Vents 65
Quantity Indicator 65
Oil-Tank Installation 65
Oil Radiator 66
Oil-Temperature Gage 66
Oil-System Lines, Fittings and Accessories 66
Oil-System Drains 66
Engine Breather Lines 66
Cooling 67
Cooling Tests 67
Accessory Cooling 68
Baffles 68
Induction-System 68
Induction-System Arrangement 68
Air Cleaners 69
Induction-System Anti-Icing Provisions 69
Icing Hazards 69
Impact Ice 69
Throttle Ice 69
Refrigeration Ice 69
Ice Prevention 69
Preheat Requirements 70
Carburetor Air Preheater Design 70
Exhaust System 71
Exhaust Manifold 71
Manifold Construction 71
Manifold Installation 71
Manifold Clearance and Cooling Provisions 72
Manifold Drains 72
Heaters Used in Cabin-Air-Heating Systems 72
Exhaust-System Heat Exchangers 72
Fuel-Burning Combustion Heaters 73
Firewall and Cowling 74
Firewalls 74
Cowling 74
Cowl Arrangement 74
Cowl Construction 74
Powerplant Controls, Accessories and Instruments 75
Powerplant Controls 75
Installation of Powerplant Controls 75
Throttle Controls 75
Mixture Controls 76
Propeller Controls 76
Fuel-System Controls 76
Preheat Controls 76
Ignition Switches 76

Page

Powerplant Controls, Accessories and Instruments—Continued
Powerplant Accessories ... 76
Accessory Suitability ... 77
Electrical Equipment in Accessory Compartment ... 77
Powerplant Instruments ... 77
Powerplant Instrument Installation ... 77
Instrument Markings ... 77

Flight Test

Performance ... 81
General ... 81
Climb Performance ... 81
Effect of Drag on Climb ... 81
Effect of Weight on Climb ... 82
Effect of Power on Climb ... 82
Determination of Climb Performance ... 83
Flight Characteristics ... 83
General ... 83
Facts About the Stall ... 84

List of Figures

Figure
1–1 Open Bay in Primary Structure. (*See* 1.30) ... 21
1–2 Reinforcing Open Bays. (*See* 1.30) ... 22
1–3 Reinforcing an Open Bay of Small Dimensions. (*See* 1.30) ... 22
1–4 Hopper or Tank Installation. (*See* 1.4) ... 24
1–5 Spray Boom Installation. (*See* 1.5) ... 25
1–6 Attachment of Spray Boom Supports to Wing Spars. (*See* 1.5) ... 25
1–7 Typical Spray Boom Installation Supported by Front and Rear Spars. (*See* 1.5) ... 25
2–1 Reinforcing Sides of Hoppers. (*See* 2.301) ... 28
2–2 Full Fell Interlocking Seam. (*See* 2.302) ... 28
2–3 Angle Reinforced Corner. (*See* 2.302) ... 29
2–4 Symmetrical Hopper c. g. Computation. (*See* 2.3040) ... 30
2–5 Odd-Shaped Hopper c. g. Computation. (*See* 2.3041) ... 31
2–6 Sketch of Venturi Cross Section. (*See* 2.320) ... 33
2–7 Poor Venturi Leading Edge Design. (*See* 2.320) ... 33
2–8 Tank Baffle. (*See* 2.413) ... 35
2–9 Sketch of Tank Pressure Test. (*See* 2.416) ... 35
7–1 Possible Weight Increases. (*See* 7.10) ... 52
7–2 Variation of Bank Angle With Load Factor. (*See* 7.11) ... 53
8–1 Flexible-Hose Connections. (*See* 8.3055) ... 79
9–1 Approximate Maximum Available Rate of Climb at Various Weights for Typical Agricultural Aircraft at Sea Level and Standard Temperature. (*See* 9.02) ... 85
9–2 F_C Rate of Climb Correction for Altitude and Temperature. (*See* 9.02) ... 86

Appendix B

Table of Contents

	Page
Basis and Purpose	89
Scope and Applicability	89
Safety Recommendations	89
Type Certificate	89
Airworthiness Certificate	89
Procedure for Showing Compliance	89
Inspection and Tests	90
Individual Certification	90
Certification of Series Aircraft	90
Changes	90
Minor Changes	90
Visual Basis Changes	90
Design Requirement Changes	90
Service Experience Changes	90
Definitions	90
General	90
Standard Atmosphere	90
Airplane Configuration	90
Weights	90
Empty Weight	90
Maximum Weight	90
Minimum Weight	90
Power	90
Speeds	90
V_t	90
V_{s_0}	90
V_{s_1}	90
V_{fe}	90
V_m	90
V_d	90
V_{nc}	90
Structural Terms	90
Structure	90
Design Wing Area, S	91
Design Wing Loading, W/S	91
Limit Load	91
Ultimate Load	91
Factor of Safety	91
Load Factor or Acceleration Factor, η	91
Limit Load Factor	91
Ultimate Load Factor	91
Fire Protection	91
Fireproof	91
Fire-Resistant	91
Flame-Resistant	91
Flash-Resistant	91
Flammable	91
Approved	91
Flight	91
Procedure	91
Weight and Balance	91
Empty Weight	91
Maximum Weight	91
Minimum Weight	91
Performance	92
Stalling Speeds	92
Stalling Speed Limit	92
Normal Climb	92
Flight Characteristics	92
Controllability	92
General	92
Longitudinal Control	92
Trim	93
Stability	93
Static Longitudinal Stability in Climb	93
Static Directional and Lateral Stability	93
Dynamic Stability	93
Stalling	93
Level Flight Stalls	93
Turning Flight Stalls	94
Ground Characteristics	94
Longitudinal Stability and Control	94
Directional Stability and Control	94
Shock Absorption	94
Flutter and Vibration	94
Strength Criteria	94
General	94
Loads	94
Applicability of Loads	94
Factor of Safety	95
Strength and Deformations	95
Proof of Structure	95
Flight Loads	95
General	95
Design Airspeeds	95
Load Factors	95
Flight Load Factors	95
Wing and Wing Supporting Structure Design Conditions	95
Positive High Angle of Attack Condition	96
Positive Low Angle of Attack Condition	96
Negative Low Angle of Attack Condition	96
Leading Edge Loadings	96
Wing Loads in Landing	96
Fuselage Design Conditions	96
Forward Fuselage Conditions	96
Aft Fuselage Conditions	97
Fuselage Section Between Wing Attach Points	97
Fuselage to Wing Attach Points	97
Dead Weight Items	97
Control Surface and Control Surface Supporting Structure Design Conditions	97
Control System Design Conditions	98
Control Surface and System Tests	98

	Page
Supplementary Design Conditions	98
Engine Mount Loads	98
Ground Loads	98
General	98
Design Landing Weight	98
Load Factor for Landing Conditions	98
Landing Cases	98
Main Landing Gear Loads (Tail Wheel Type)	98
Tail Wheel Loads (Tail Wheel Type)	98
Nose Wheel Type Gear	98
Landing Gear Tests for Demonstrating Compliance	98
Nose Wheel Type Landing Gear Drop Tests	98
Tail Wheel Type Landing Gear Drop Tests	99
Landing Gear Wheels and Tires	99
Brakes	99
Design and Construction Standards	99
General	99
Special Factors	99
Control Surfaces and Systems	99
Flaps	99
Flutter Prevention Measures	99
Vision	99
Protection	99
Crew Protection	99
Seats, Safety Belts or Harnesses	99
Cockpit Hazards	100
Cargo Provisions	100
Toxic Materials	100
Aircraft Protection	100
Corrosion Protection	100
Dispensing Installations	100
Aircraft Structure Covering	100
Powerplant Installation	100
Engines	100
Propellers	101
Propeller Vibration	101
Propeller Pitch and Speed Limitations	101
Fuel System	101
Fuel System Arrangement	101
Fuel Flow Rate	101
Fuel Flow Rate for Gravity Feed Systems	101
Fuel Flow Rate for Pump Systems	101
Fuel Tanks	101
Fuel Tank Pressure Test	101
Fuel Tank Installation	101
Fuel Pump and Pump Installation	102
Fuel System Lines, Fittings, and Accessories	102
Fuel Strainer	102
Oil System	102
Oil Tanks	102
Oil Tank Pressure Test	102
Oil Tank Installation	102
Oil System Lines, Fittings, and Accessories	102
Engine Breather Lines	102
Cooling	102
Induction System	102
Induction System Anti-Icing Provisions	102
Carburetor Air Preheater Design	102
Exhaust System	103
Exhaust Manifold	103
Exhaust Heaters Used in Cabin Air Heating Systems	103
Firewalls	103
Cowling	103
Powerplant Controls and Accessories	103
Powerplant Controls	103
Powerplant Accessories	103
Equipment	103
General	103
Required Equipment	103
Recommended Equipment	103
Design and Operating Limitations and Information	103
Design Limitations	103
Airspeeds	103
Never-Exceed Speed (V_{ne})	103
Maneuvering Speed (V_m)	104
Flaps Extended Speed (V_{fe})	104
Powerplant	104
Maximum Weight	104
Airplane Center of Gravity	104
Operating Limitations	104
Markings and Placards	104
General	104
Airspeed Markings	104
Cockpit Control Markings	104
Powerplant Instrument Markings	104
Fuel Control Markings	104
Disposable Load Placards	104
Airplane Empty Weight and Balance Information	104
Identification Data	104

List of Figures

Figure		Page
.2100	Minimum Design Maneuvering Speed	105
.2120	Design Limit Wing Loading	105
.212 (a)	Distribution of Loading Between Upper and Lower Biplane Wings	106
.212 (b)	Wing Flight Conditions	107
.2123	Limit Leading Edge Loadings	108
.2130	Typical Forward Fuselage Loading Diagram	109
.2131	Typical Aft Fuselage Loading Diagram	110
.214	Average Limit Control Surface Loadings	112
.2170	Engine Torque vs. R. P. M	113
.222	Limit Load Factor For Landing Conditions	114
.2230 (a)	Three-Point Landing Condition With Vertical Reactions (Tail Wheel Type)	116
.2230 (b)	Level Landing With Inclined Reactions (Tail Wheel Type)	116
.2230 (c)	Level Landing With Side Load (Tail Wheel Type)	117
.2231 (a)	Three-point Landing Condition With Vertical Reactions (Tail Wheel)	119
.2231 (b)	Obstruction Load Condition (Tail Wheel)	119
.2231 (c)	Side Load, Tail Wheel Free (Tail Wheel)	119
.2231 (d)	Side Load, Tail Wheel Locked (Tail Wheel)	119
.2232 (a)	Essential Dimensions of Tricycle Alighting Gear	121
.2232 (b)	Three-Wheel Landing With Inclined Reactions (Tricycle Gear)	121
.2232 (c)	Two-Wheel Landing With Vertical Reactions—Nose Up (Tricycle Gear)	121
.2232 (d)	Two-Wheel Landing With Inclined Reactions—Nose Down (Tricycle Gear)	122
.2332 (e)	Side Drift Landing (Tricycle Gear)	122
.2232 (f)	Bending In Nose Strut (Tricycle Gear)	122
.224	Minimum Free Drop Height	123
.3511	Spray Tank Pressure	124

List of Tables

Table		
.214	Average Limit Control Surface Loadings	111
.215	Limit Pilot Loads	98
.2230	Main Landing Gear Limit Loads (Tail Wheel Type)	115
.2231	Tail Wheel Limit Loads	118
.2232	Nose Wheel Type Landing Gear Limit Loads	120

Aircraft Airworthiness

Restricted Category

8.0 *Applicability of this part.* This part establishes standards for the issuance of type and airworthiness certificates for aircraft in the restricted category which are intended to be operated for agricultural, industrial, or other special purposes. This part also establishes operating limitations applicable to such aircraft.

8.0–1 *Eligible special purposes (CAA interpretations which apply to sec. 8.0).*

(a) The operating limitations specified in sections 8.32 and 8.33 limit the special purposes for which an aircraft may be certificated in the restricted category under Part 8. Section 8.32 prohibits the carriage of persons or cargo for hire in restricted category aircraft. Section 8.33 prohibits the carriage of persons other than the crew during special purpose operations. A flight operation involving the carriage of persons or cargo under the conditions prohibited by sections 8.32 or 8.33 will therefore not be considered an eligible special purpose for certificating the aircraft under the provisions of Part 8.

(b) The following are examples of special purpose operations considered to be within the applicability of Part 8:

Agricultural—spraying, dusting, and seeding; livestock and predatory animal control.

Forest and wildlife conservation.

Aerial surveying—photography, mapping; oil and mineral exploration.

Patrolling—pipelines, power lines, canals.

Weather control—cloud seeding.

Aerial advertising—skywriting, banner towing airborne signs and public address systems.

Appropriate combinations of such special purposes will also be eligible.

NOTE.—A Certificate of Waiver or Authorization is required to conduct special purpose operations over certain areas (see sec. 8.31 and 8.31–1).

Published in 15 F. R. 9223, December 23, 1950, effective January 1, 1951.

8.0–2 *Applicability to aircraft previously certificated in the restricted category (CAA policies which apply to sec. 8.0).*

(a) Aircraft which were certificated in the restricted category prior to the effective date of Part 8 (October 11, 1950) may at the option of the owner retain their existing certification status.

(b) Alternatively, aircraft previously certificated in the restricted category may be recertificated under Part 8 as follows:

(1) If the aircraft is not modified from its previously approved configuration, the applicant should apply for recertification in accordance with section 8.20–1 (a). The CAA representative, without further inspection of the aircraft, will prescribe revised aircraft operating limitations (see sec. 8.30–1) indicating that the aircraft is certificated under Part 8. For agricultural aircraft the placard capacities of hoppers and tanks may be established and revised by the owner in accordance with section 8.10–4 (b). Repairs and alterations to such aircraft made after recertification under Part 8 will be handled in accordance with section 8.20–3.

(2) If the configuration of the aircraft is modified (i. e., a major alteration) from the previously approved configuration, the recertification procedure will be that specified in section 8.10–3.

(c) On or after October 11, 1950, an aircraft certificated for the first time in the restricted category must be certificated under Part 8, since previous restricted category requirements are rescinded on that date.

Published in 15 F. R. 9223, December 23, 1950, effective January 1, 1951; amended in 19 F. R. 1791, April 1, 1954, effective April 30, 1954.

8.0–3 *Applicability to aircraft certificated in a category other than restricted category (CAA policies which apply to sec. 8.0).*

(a) Part 8 does not require an aircraft used for a special purpose to be certificated in the

397956 O - 56 - 2

restricted category. An aircraft modified for a special purpose may therefore be certificated in a category other than the restricted category (e. g., normal, utility or acrobatic category), provided the modified aircraft fully complies with the airworthiness requirements for such category.

(b) An aircraft which has been previously modified and then certified in a category other than restricted (as described in paragraph (a) of this section), may either retain its existing certification status or be recertified in the restricted category under Part 8 in accordance with the procedure specified in section 8.0–2 (b). In the latter case, the CAA representative will issue a revised Certificate of Airworthiness and prescribe appropriate operating limitations.

(c) An aircraft which has been previously type certificated in another category and then modified for a special purpose may be certificated in the restricted category in accordance with the procedure specified in section 8.10–3.

(d) An aircraft which has been certificated in the restricted category under Part 8 may be recertificated in another category when—

(1) The aircraft is restored to a configuration which is eligible for certification under an existing type certificate in such category, or

(2) Any changes from such configuration are shown to comply with the airworthiness requirements for the appropriate category.

(e) An aircraft may, however, be certificated in the restricted and other categories in accordance with the multiple airworthiness certification provisions of section 8.21.

Published in 15 F. R. 9224, December 23, 1950, effective January 1, 1951; amended in 19 F. R. 1791, April 1, 1954, effective April 30, 1954.

8.1 *Definitions.*

(a) As used in this part, terms shall be defined as follows:

(1) *Administrator.* The Administrator is the Administrator of Civil Aeronautics.

(2) *Applicant.* An applicant is a person or persons applying for approval of an aircraft or any part thereof.

(3) *Approved.* Approved, when used alone or as modifying terms such as means, devices, specifications, etc., shall mean approved by the Administrator.

(4) *Authorized representative of the Administrator.* An authorized representative of the Administrator shall mean any employee of the Civil Aeronautics Administration or any private person, authorized by the Administrator to perform any of the duties imposed upon him by the provisions of this part.

8.1–1 *Authorized representative of the Administrator (CAA interpretations which apply to sec. 8.1 (a) (4)).* The term "private person" mentioned in this section is interpreted to mean a Designated Aircraft Maintenance Inspector (DAMI), or a Designated Manufacturing Inspection Representative (DMIR). All such persons are issued a Certificate of Authority, Form ACA–1382, for the purpose of identification.

Published in 15 F. R. 9224, December 23, 1950, effective January 1, 1951.

8.10 *Eligibility for type certificate.*

(a) Any aircraft of the following classifications shall be issued a type certificate in the restricted category, if the Administrator finds that no feature or characteristic of the aircraft renders it unsafe when operated in accordance with the limitations prescribed for its intended use:

(1) An aircraft type which has not previously been type certificated but which is shown by the applicant to comply with all of the airworthiness requirements of any other aircraft category prescribed in this subchapter, except those requirements which the Administrator finds inappropriate for the special purpose for which the aircraft is to be used; or

(2) An aircraft type which has been manufactured in accordance with the requirements of, and accepted for use by, a United States military service and subsequently modified for a special purpose, whether or not such aircraft has been issued a type certificate under the provisions of Part 9 of this chapter.

(b) A modification of a type certificate may be issued to an applicant for an aircraft which has been previously type certificated in another category and then modified for a special purpose when, upon inspection, the

Administrator finds that the modifications conform to a good aeronautical practice and that no feature or characteristic of the aircraft renders it unsafe when operated in accordance with the limitations prescribed for its intended use.

8.10–1 *Aircraft of a type not previously type certificated (CAA policies which apply to sec. 8.10 (a) (1)).* The following policies apply to the certification of new design restricted category aircraft which have not been type certificated or accepted for use by a United States military service.

(a) The applicant should submit an application for type certificate, Form ACA–312, in duplicate, to the appropriate CAA Regional Office, applying for a type certificate under this part. The CAA will issue a type certificate after the aircraft has been shown to comply with appropriate airworthiness requirements.

(b) To establish the appropriate airworthiness requirements, the applicant may submit a proposal to the CAA Regional Office, Aircraft Division, in which he selects the airworthiness requirements of one of the standard categories (e. g., Normal or Utility in Part 3) as a basis, and indicates any requirements which he considers should be waived or modified for the special purpose involved. After examination of the applicant's proposal, the CAA will advise him of its acceptance as a basis for showing compliance, or specify the requirements which the CAA finds appropriate.

(c) In selecting and showing compliance with the appropriate airworthiness requirements the applicant may use as a guide, the information contained in Appendix B to this part, entitled "Airworthiness Criteria for Agricultural and Similar Special Purpose Aircraft."

Published in 15 F. R. 9225, December 23, 1950, effective January 1, 1951; amended in 16 F. R. 10114, October 4, 1951, effective November 15, 1951.

8.10–2 *Military type aircraft (CAA policies which apply to sec. 8.10 (a) (2)).* For certification in the restricted category, military aircraft are divided into three classes:

(a) *Military aircraft models previously type certificated in the limited category under Part 9.*

(1) For such aircraft, the certification procedure will be that specified in section 8.10–3.

(2) A list of military models that have been previously type certificated in the limited category is given in CAA Safety Regulation Release No. 277, "Status of Aircraft Certificated in the Limited Category."

(3) Compliance with the military technical orders listed on the CAA aircraft specifications will not be mandatory; however, the applicant should review the changes specified in these orders to determine if they are appropriate for the particular airplane and special purpose.

(b) *Military aircraft models previously type certificated under Part 4a.*

(1) Some military aircraft have been type certificated under Part 4a on the basis of required "conversion modifications" which are listed on the pertinent CAA aircraft specification. Such modifications will not be mandatory for certification under Part 8; however, the applicant should review the conversion modifications listed on the aircraft specification to determine if they are appropriate to the particular aircraft and special purpose.

(2) For such aircraft the certification procedure will be that specified in section 8.10–3.

(3) A listing of these military aircraft models is given in the CAA "Alphabetical List of Aircraft Specifications" which is included in the files of CAA Regional and District Offices, Aviation Safety Agents and Designated Aircraft Maintenance Inspectors.

(c) *Military aircraft models not previously type certificated in any category.* For military aircraft not covered by paragraphs (a) and (b) of this section, the certification procedure will be that specified in section 8.10–3 upon completing the following initial steps:

(1) The applicant should first submit a letter to the CAA, Aircraft Division, Washington 25, D. C., identifying the military model and the proposed special purpose, and requesting certification under Part 8.

(2) The CAA will check the military record of the aircraft type. If the record discloses unsafe characteristics, the CAA will inform the applicant of these, and the aircraft will not be eligible for certification unless they are corrected or can be compensated by operating restrictions. If the military record is considered

satisfactory, the applicant will be so informed, and a type certificate issued for the basic type.

The certification procedure will then continue as specified in section 8.10–3.

Published in 15 F. R. 9225, December 23, 1950, effective January 1, 1951.

8.10–3 *Aircraft modified from a previously approved type (CAA policies which apply to sec. 8.10 (b)).* Under the provisions of sections 8.10 (b) and 8.20 (a), a modification to the type certificate must be issued for an aircraft which has been previously type certificated in another category and then modified for a special purpose, in order to make the aircraft eligible for an airworthiness certificate in the restricted category. A modification of the type certificate will be issued by means of Repair and Alteration Form ACA–337 upon completion of the procedure specified in paragraphs (a) through (f) of this section.

The term "another category", as used in section 8.10 (b), includes normal, utility, acrobatic, transport or limited categories, under Parts 3, 4a, 4b, 6 or 9 but does not include experimental. For aircraft previously certificated in the restricted category, see section 8.0–2.

(a) *Classes of modifications.* Since modifications may vary in scope from minor alterations to complete redesign of major components, the basis for determining the airworthiness of a modified aircraft will depend upon the nature and extent of the modification. For this purpose, modifications are divided into two classes:

(1) *Visual basis modifications.* Modifications in this class are those for which airworthiness can be determined by visual examination, using as guides the original design of the aircraft and available information on modification practices. (See sec. 8.10–4.)

The procedure for this class is given in paragraphs (b) through (f) of this section. The submittal of technical data, such as drawings and stress analysis, is not required; however, for some modifications of this class it may be desirable to obtain engineering advice.

Examples of this class are:

(i) The removal of a diagonal from a lower fuselage bay and substitution of equivalent bracing, installation of a hopper, and increase of engine weight and power, using information referenced in section 8.10–4 as a guide.

(ii) Reduction in span of a strut braced monoplane. In this case engineering advice should be obtained, since the loads in the wings spars may or may not be seriously changed, depending on the relative location of the strut attachment point in the original and modified designs. In such cases, the CAA will furnish technical assistance upon request by the applicant.

(2) *Design requirement modifications.* Some modifications may be so extensive that the original design of the aircraft and available information on modification practices no longer furnish a suitable basis for determining airworthiness.

An example is the conversion of a monoplane to a biplane, in which case the original design does not furnish an adequate basis of comparison for judging the structural strength of the new lift truss.

The airworthiness of this class of modifications should be determined in accordance with the applicable parts of the airworthiness requirements for new design aircraft, as specified in section 8.10–1 (b) or (c). Technical data or other proof of compliance should be submitted in accordance with those requirements.

(b) *Application.* The applicant should apply to a CAA Aviation Safety District Office, CAA Aviation Safety Agent, or a Designated Aircraft Maintenance Inspector (DAMI) who has been specifically authorized to perform restricted category certification, and request certification of the modified aircraft in the restricted category. The following documents should be submitted by the applicant.

(1) Duplicate copies of Repair and Alteration Form ACA–337. (See par. (d) of this section.) These forms are prepared by the agency performing the modification.

(2) Application for Airworthiness Certificate and/or Annual Inspection of an Aircraft Form ACA–305. (See sec. 8.20–1 (a).) These forms are obtainable from all CAA Regional and District Offices and DAMI's. The applicant may consult with CAA or proceed with the modification prior to making formal application.

(c) *Performance of modification.* The modification to the aircraft should be performed by or under the supervision of an authorized

agency (i. e., a certificated mechanic, or approved repair station having the proper ratings, or the manufacturer of the aircraft) as specified by section 18.10. Information for guidance in performing modifications is referenced in sections 8.10–4 and 8.10–5.

(d) *Form ACA–337.* Two copies of Repair and Alteration Form ACA–337 should be prepared by the agency performing the modification, in accordance with the following:

(1) Under Item 8 of Form ACA–337, state that the aircraft has been modified in accordance with Part 8 and briefly describe the modifications which have been made to the aircraft from its previously approved configuration. Examples of this entry are given in section 8.20–3 (b) (2) (ii).

(2) It is not required that the aircraft empty weight, empty center of gravity or useful load be listed under item 4 of Form ACA–337; however, if this information is being voluntarily maintained by the aircraft owner it may be entered in this space. (See secs. 8.10–4 (b) and (c).)

(3) When the flight check specified in paragraph (e) has been completed, it should be recorded on the back of Form ACA–337.

(e) *Flight check.*

(1) The applicant should have the modified aircraft flight checked by a certificated pilot holding at least a private pilot rating to determine that it is safely controllable and operates satisfactorily in flight under the most adverse loading conditions anticipated in service. (See secs. 8.10–4 (b) and (c)). For agricultural aircraft, the hoppers or tanks should be loaded to the maximum weights selected by the applicant and discharged in flight. For other aircraft, flight checks should be made with the special purpose loads, such as equipment (or equivalent weights), installed, and with such loads removed, if the aircraft is intended to be operated in that condition. The maximum capacity weights should be approached in stages, if there is any doubt concerning the controllability or performance of the airplane.

(2) The takeoff should be made from a field of ample size or over suitable open terrain. The flight check should include maneuvers simulating the intended special purposes operations. The maneuvers should first be performed at a safe altitude over open terrain. Any undue tendency to go into a stall or dive (instability) or to roll should be considered unsatisfactory.

(3) Upon completion of a satisfactory flight check, the following entry should be made on the back of Form ACA–337 and signed by the pilot who performed the flight check:

Modified aircraft flight checked on _____ (Date)

by _____ (Name) _____ (Pilot certificate number)

in accordance with CAM 8.10–3 (e) and found to be safely controllable and to operate satisfactorily with the following special purpose load: _____ pounds.

(4) Entries similar to those specified in subparagraph (3) of this paragraph should also be made in the aircraft logbook.

(f) *Inspection of modifications.* A CAA Agent, or a DAMI specifically authorized to perform this function, will visually inspect the aircraft modifications for the following, using the information referenced in section 8.10–4 as a guide:

(1) Good aeronautical practice in respect to materials, techniques, and workmanship.

(2) Obvious unsafe features or hazards, of which the following are examples:

(i) *Structure.* Removal of structural members or material without adequate reinforcing; attachment or heavy loads to members at improper points.

(ii) *Fire and toxicity.* Improper location, construction or installation of hoppers, tanks, discharge devices, flammable fluid lines, pumps, and connections; lack of ventilation, drainage, and cleaning provisions; special fire prevention features if the aircraft is to be used for sulfur dusting; otherwise such operations will be restricted by operating limitations. (See sec. 8.30–1 (b) (2) (i)).

(iii) *Crash hazards.* Inadequate attachment of seats and safety belts; tanks or hoppers located aft of pilot and not adequately supported for forward acting inertia loads.

(iv) *Vision.* Any appreciable reduction in angles of vision.

(g) *Approval of modified type aircraft.* Upon satisfactory completion of items (b) through (f), the Forms ACA–337 will be checked "approved." The original copy of the Form ACA–

337 will be returned to the aircraft owner for inclusion in the aircraft's records, and will constitute the modification of the type certificate required in section 8.10 (b).

The agent or designee will also inspect the entire aircraft for general airworthiness condition, issue an airworthiness certificate, and prescribe the operating limitations in accordance with sections 8.20–1 and 8.30–1.

(h) *Approval of alternate installations.* Approval of alternate installations (e. g. hopper or tank) may be obtained on the same Form ACA–337, provided both are described and meet the requirements for approval.

(i) *Additional modified aircraft.* After the first modified type aircraft has been approved in accordance with paragraph (g) of this section, additional aircraft of the same type may be approved on the basis of conformity with the original, without requiring the complete flight check speed specified in paragraph (f) of this section. The following entry should be made at the end of item 7 of the Forms ACA–337 for the additional aircraft:

These modifications are the same as described on approved Form ACA–337, dated

---

for _____

(CAA Registration Mark of orginal approved aircraft)

Published in 15 F. R. 9226, December 23, 1950, effective January 1, 1951; amended in 19 F. R. 1791, April 1, 1954, effective April 30, 1954.

8.10–4 *Agricultural aircraft modifications (CAA policies which apply to sec. 8.10 (b)).*

(a) *General.* This section applies to aircraft used for agricultural and similar special purpose operations which are normally conducted over open areas.

Information for the guidance of operators in modifying and operating aircraft for agricultural purposes is given in CAM 8, Appendix A. Compliance with this guide material is not required to obtain approval of a modified aircraft; however, precautions should be taken to avoid hazards such as those listed in section 8.10–3 (f). Sections 18.30–1 through 18.30–17, manufacturer's bulletins, military manuals, industry specifications, and previous satisfactory modifications may also be used as guides in modifying aircraft.

The CAA will, upon request, furnish consulting service on the safety aspects of aircraft modifications and installations.

(b) *Maximum weight.*

(1) It is not required that a maximum (total) weight be established as an operating limitation for agricultural aircraft. In lieu thereof maximum weights for the special purpose loads (e. g., hopper or tank capacities) should be selected by the applicant and demonstrated in the flight check in accordance with section 8.10–3 (e).

(i) These maximum capacities (weights) for the hoppers or tanks should be listed on placards on or adjacent to the appropriate filler covers.

(ii) If subsequent modifications change the aircraft weight or balance appreciably, or the operator desires to increase the special purpose loads, the flight check specified in sections 8.10–3 (e) (1) and (2) should be conducted with the revised loadings. Hopper or spray tank placards may be revised accordingly. The flight check should be recorded in the aircraft logbook as specified in section 8.10–3 (e) (4). Form ACA–337 is not required to be submitted when the special purpose load is changed without modification of the aircraft.

(iii) When a previously certificated agricultural aircraft is recertificated under Part 8 without changing the aircraft (see secs. 8.0–2 (b) and 8.0–3 (b)), the placard capacities may be determined by calculation from the previous "useful load" data, without flight check.

(2) Under the aircraft operating limitations, the operator is responsible for adjusting the actual operating weight to provide a safe margin of performance for the existing flight conditions. (See sec. 8.30–1.) Appendix A contains information from which the effects of drag, weight, altitude, and temperature on aircraft performance may be estimated.

(3) Any increase in maximum weight will, of course, impose higher loads on the aircraft structure. The extent to which the weight may be safely increased will depend on the maneuvers and speeds used in the special purpose operations and the strength requirements to which the aircraft was originally designed. Information on the strength requirements to which a previously type certificated aircraft was

originally designed may usually be obtained from the CAA.

(c) *Center of gravity.*

(1) A weight and balance report is not required to be submitted. However, to prevent possible dangerous flight characteristics, it is recommended that the modification be planned so as to avoid excessive change in center of gravity. Information on this subject is given in Appendix A and in section 18.30–16.

(2) One purpose of the flight check specified in section 8.10–3 (e) is to determine that the aircraft is safely controllable at the most foward and most aft loading conditions anticipated in service. For agricultural aircraft this may usually be accomplished by conducting the flight check with maximum and minimum fuel loads intended to be carried in combination with the corresponding hopper or spray tank loads. For large aircraft, or those with more complicated arrangements of the variable loads, weight and balance calculations should be made to determine critical combinations for the flight check.

(d) *Powerplant modifications.*

(1) It is recommended that CAA type certificated or military approved aircraft engines and propellers be installed, and that a propeller stress survey be made for all metal propeller-engine combinations which have not been previously surveyed to determine the existence of dangerous vibration ranges.

(2) If the recommendations in (1) are not followed, the aircraft operating limitations will state that the aircraft shall not be operated over congested areas and is not eligible for a waiver to conduct such operations. (See secs. 8.30–1 and 8.31–1.)

(3) Information for guidance in making engine installations is given in CAM 8, Appendix A.

Published in 15 F. R. 9227, December 23, 1950, effective January 1, 1951; amended in 19 F. R. 1791, April 1, 1954, effective April 30, 1954.

8.10–5 *Advertising aircraft modifications (CAA policies which apply to sec. 8.10 (b)).* Since aerial advertising operations are normally conducted over congested areas, for which a certificate of waiver or authorization would be required under the provisions of sections 8.31 and 8.31–1, it is important that high standards for powerplant reliability, structural integrity, and safe flight characteristics be maintained in modifying aircraft for such purposes.

Published in 15 F. R. 9227, December 23, 1950, effective January 1, 1951.

8.20 *Eligibility for airworthiness certificate.* An aircraft shall be issued an airworthiness certificate in the restricted category if it complies with all of the following provisions:

(a) The aircraft is type certificated under the provisions of section 8.10 (a), or modified under the provisions of section 8.10 (b);

(b) The aircraft has been inspected by the Administrator and found by him to be in a good state of preservation and repair and in a condition for safe operation; and

(c) The Administrator has prescribed operating limitations for the aircraft in accordance with section 8.30.

8.20–1 *Issuance of airworthiness certificates for aircraft modified from a previously approved type (CAA policies which apply to sec. 8.20 (b)).* The following procedure applies to aircraft which have been modified from a previously approved type or a military type under the provisions of sections 8.10 (b) or 8.10 (a) (2), and 8.10–3:

(a) *Procedure to be followed by applicant.* The applicant should make application for a restricted category certificate of airworthiness on Form ACA–305, entitled "Application for Airworthiness Certificate and/or Annual Inspection of an Aircraft." This form is obtainable from all CAA Regional and District Offices, and Designated Aircraft Maintenance Inspectors (DAMI's). It is suggested that the applicant discuss the entries required to complete the form with an Aviation Safety Agent, or a DAMI authorized to perform restricted category certification, at the time the form is secured.

Normally, restricted category certificates will be issued by a CAA aviation safety agent; however, the Administrator may authorize DAMI's who are especially experienced with restricted category aircraft to issue restricted category airworthiness certificates. In order that applications may be processed expeditiously, they should be directed to the local aviation safety

district office, unless the applicant knows of a DAMI who has been given specific authority to issue restricted category airworthiness certificates.

(b) *Inspection for state of preservation and repair.*

(1) *Inspection.* In addition to the inspection of the modification referred to in section 8.10–3 (f), the CAA representative will make an inspection for determining the state of preservation and repair, approximating the scope of a periodic inspection. (See instruction items 3 through 11 contained on the reverse side of Form ACA–319 (revised 11–49) for the scope of a periodic inspection.) Form ACA–319, entitled, "Periodic Aircraft Inspection Report," is obtainable from any CAA District Office or Regional Office, or CAA representative.

(2) *Airworthiness directives.* Compliance with CAA airworthiness directives issued for the basic (unmodified) type will not be mandatory for aircraft certificated under Part 8. However, the owner should review these airworthiness directives to determine if they are applicable to the modified aircraft and special purpose involved. The CAA representative may use the airworthiness directives as a guide and will not approve the aircraft if he finds that an unairworthy condition actually exists at the time of the inspection.

(3) *Aircraft identification marks.* In accordance with the provisions of sections 1.101 through 1.108, all restricted category aircraft must display aircraft identification marks which comply with the following:

(i) The word "restricted" must be prominently displayed near each entrance to the cabin or cockpit.

(ii) If the symbol "R" appears in the aircraft identification marks, it need not be removed until the aircraft is refinished; except that such symbol must be removed from aircraft operating outside the United States after December 31, 1950.

(iii) If the aircraft was previously certificated in another category and bears the symbol "C," "X," or "L" in the identification marks, such symbol must be removed prior to certification in the restricted category. In such cases it will not be necessary to relocate the remaining symbols or numbers.

Published in 15 F. R. 9227, December 23, 1950, effective January 1, 1951; amended in 19 F. R. 1791, April 1, 1954, effective April 30, 1954.

8.20–2 *Issuance of airworthiness certificates for aircraft manufactured under a restricted category type certificate (CAA policies which apply to sec. 8.20 (b)).* An airworthiness certificate will be issued for an aircraft manufactured under a restricted category type certificate (for example, a new design type certificated under the provisions of sections 8.10 (a) (1) and 8.10–1 when the following procedure is completed.

(a) For aircraft manufactured under a type certificate only.

(1) An application for an airworthiness certificate is made on Form ACA–305.

(2) A statement of conformity, Form ACA–317, signed by the manufacturer, is submitted with the application.

(3) A representative of the Administrator has inspected the aircraft and finds that it conforms to the type design and is in condition for safe operation.

(b) For aircraft manufactured under a production certificate: The procedure will be as specified in paragraph (a) of this section, except that a statement of conformity is not required, and the conformity inspection may be omitted.

Published in 15 F. R. 9227, December 23, 1950, effective January 1, 1951.

8.20–3 *Repairs and alterations (CAA policies which apply to sec. 8.20 (b)).* The procedures specified in this section apply to repairs and alterations which are made subsequent to the original certification of an aircraft in the restricted category under Part 8. For restricted category aircraft which have not been recertificated under Part 8 (see sec. 8.0–2 (a)) repairs and alterations should continue to be accomplished in accordance with Part 18 including the Administrator's policies and interpretations.

For aircraft which have been issued a multiple airworthiness certificate under the provisions of section 8.21, repairs and alterations should be

accomplished in accordance with section 8.21–1 (f).

(a) *Owner's procedure.* It is the responsibility of the aircraft owner, or his agent, to assure that all mechanical work, other than routine maintenance, is performed by or under the supervision of an authorized agency (i. e., a certificated mechanic or approved repair station having the proper ratings, or the manufacturer of the aircraft) as specified in section 18.10, and in accordance with this manual.

Prior to returning the aircraft to service, the owner should determine that the repairing or altering agency has completed the record of such repairs and/or alterations in the appropriate aircraft or engine records in accordance, with section 43.23, and that a flight check has been made, if applicable. (See sec. 8.20–3 (b) (2) (iii).)

(b) *Repair agency procedure.* A repair agency (i. e., a certificated mechanic, approved repair station, or the manufacturer of the aircraft) should be guided by the following when accomplishing repairs and/or alterations to an aircraft certificated in the restricted category under Part 8:

(1) *Good practices.* All repairs and/or alterations should be made in accordance with good aeronautical practice. The Administrator's policies and interpretations in Civil Aeronautics Manual 18 describe in detail the operations which the Administrator of Civil Aeronautics considers to be routine maintenance, minor and major repairs, and minor and major alteration. They set forth in detail repair methods, techniques, and practices which the Administrator has found acceptable. Sections 8.10–4 and 8.10–5, Appendix A to CAM 8, and other publications such as Army-Navy specifications, maintenance manuals for military aircraft, and recognized industry specifications are also acceptable guides to good aeronautical practice.

(2) *Major repairs and alterations.*

(i) *Technical data.* The repair agency should prepare Form ACA–337 as specified in subdivision (ii) of this subparagraph. It is responsible for determining that the repair and/or alteration is airworthy in accordance with good aeronautical practices.

(ii) *Form ACA–337.* Repair agencies should complete Form ACA–337, Repair and Alteration Form, for every major repair and/or alteration. Form ACA–337 should be completed in accordance with the instructions contained on the reverse, except that item 4 (weight and balance) need not be completed unless this information is voluntarily being maintained by the aircraft owner. (See secs. 8.10–4 (b) and (c).)

The repair agency should insert under item 8 a narrative description of the repair and/or alteration. The first statement under item 8 should indicate that the repair or alteration has been made under the provisions of Part 8. It is not necessary to include details in the description such as method of attachment, size and gauges of material, etc., since these items will be visually inspected when the aircraft is examined and approved. If the repair agency finds it easier, or preferable, to describe the repair and/or alteration by the use of photographs or sketches, these may be used to supplement the narrative description. If equipment shown on CAA Aircraft Specifications (e. g. a spray kit) is installed, it may be identified by the specification and item number. Standard repairs such as a spar splice which has been made in accordance with the Administrator's policies and interpretations in CAM 18 may be described by reference to the appropriate figure contained in the Administrator's policies and interpretations in CAM 18.

For example, a typical statement might read as follows:

The repair described below to this duster aircraft has been accomplished under the provisions of Part 8, the welding and longeron splicing have been made in accordance with figures _____ (continue with description of repair).

(iii) *Flight check.* Whenever a repair or alteration is likely to adversely affect the weight and balance, or flight characteristics (see sec. 8.10–4 (b) and (c)), the repair agency should advise the owner to conduct a flight check as specified in section 8.10–3 (e). Hopper and tank capacity (weight) placards and other special purpose weights may be changed on the basis of the flight check, as specified in section 8.10–4 (b).

(c) *Approval of major repairs and alterations performed by certificated mechanics.* Major repairs and/or alterations accomplished by certificated mechanics should be inspected, examined, and approved by an authorized representative of the Administrator prior to returning the aircraft to service.

(1) Major repairs which have been accomplished in accordance with a manual or specification approval by the Administrator may be submitted to either a DAMI or a CAA agent for inspection and approval.

(2) All major alterations, and those major repairs not made in accordance with a manual or specification approved by the Administrator, should be submitted only to a CAA aviation safety agent or to a DAMI who has been specifically authorized to perform restricted category certification for inspection and approval.

(3) It is suggested that mechanics making major repairs and/or alterations notify the CAA agent or DAMI as far in advance of the anticipated completion date as possible, in order that he may make the necessary arrangements to conduct the airworthiness inspection.

(4) The aircraft should be presented in condition for inspection, that is, all work should be completed, the appropriate cowling and inspection plates should be removed, and the parts or installations to be inspected cleaned and visible for inspection. All aircraft and engine logbook entries should have been completed, the Repair and Alteration Form ACA-337, executed, and the flight check accomplished, if applicable.

(d) *Approval of major repairs and alterations performed by manufacturers and approved repair stations.*

(1) Manufacturers of the aircraft and approved repair stations may return aircraft to service after major repairs and/or alterations without prior inspection and approval of the CAA, provided that:

(i) Repairs and alterations are performed in accordance with good aeronautical practice as defined in this manual. (See secs. 8.10–4, 8.10–5, and 8.20–3 (b) (1).)

(ii) Major alterations are in the class for which airworthiness can be determined by visual examination. (See sec. 8.10–3 (a).)

(iii) Major alterations are examined to determine that they do not result in unsafe features or hazards. (See sec. 8.10–3 (f).)

(iv) A satisfactory flight check has been accomplished, if applicable. (See sec. 820–3 (b) (2) (iii).)

(2) Major alterations in the design requirement modification class (see sec. 8.10–3 (a) (2)) should be approved by the CAA prior to returning the aircraft to service.

(3) When the Repair and Alteration Form ACA–337 has been completed in accordance with section 8.20–3 (b) (2) (ii) and the required logbook entries made, the original copy of the Form ACA–337 should be given to the owner of the aircraft and made part of the official aircraft record. The copy of Form ACA–337 should be forwared to the nearest CAA Aviation Safety District Office in accordance with the instructions contained on the reverse of the form.

Published 15 F. R. 9227, December 23, 1950, effective January 1, 1951; amended in 17 F. R. 11737, December 25, 1952, effective December 25, 1952; amended 19 F. R. 1791, April 1, 1954, effective April 30, 1954.

8.21 *Multiple airworthiness certification.*

(a) An aircraft shall be issued an airworthiness certificate in the restricted category and in any one or more of the other airworthiness categories prescribed in this subchapter, if the applicant shows compliance with the requirements for each category when the aircraft is in the configuration for that category and if the aircraft can be converted from one category to another by removal or addition of equipment by simple mechanical means.

(b) Any aircraft certificated in the restricted and any other category shall be inspected and approved by an authorized representative of the Administrator, or by a certificated mechanic with an appropriate airframe rating, to determine airworthiness each time the aircraft is converted from the restricted category to another category for the carriage of passengers for compensation or hire, unless the Administrator finds this unnecessary for safety in a particular case.

8.21–1 *Multiple airworthiness certification (CAA policies which apply to sec. 8.21).* Since the operating limitations for the restricted

category differ from those of other categories (e. g., in respect to maximum weights and the carriage of passengers) an owner may desire multiple airworthiness certification in the restricted and other categories in order to avoid the need for revising the airworthiness certification documents each time the aircraft is converted from one category to another. The following procedure applies to multiple certification:

(a) *Eligibility of aircraft.* An aircraft will be eligible for multiple airworthiness certification in the restricted category and another (passenger-carrying) category when:

(1) The aircraft complies with the requirements for a normal, utility, acrobatic, transport or limited category aircraft under Parts 3, 4a, 4b, 6, or 9 when in the appropriate configuration. This configuration may include alterations from the basic type (e. g., to accommodate the subsequent installation of special purpose equipment), provided these alterations are accomplished and approved in accordance with Part 18. This configuration will be called the "standard" configuration for the aircraft.

(2) The aircraft is shown to comply with the requirements for the restricted category in accordance with section 8.10–3 when in the restricted category configuration.

(3) The aircraft can be converted from one category to another by the addition or removal of equipment by simple mechanical means within the scope of a minor alteration. Examples of minor alterations are given in section 18.1–4.

(b) *Application.* An applicant for multiple airworthiness certification should make application for such certificate on Form ACA–305, entitled, "Application for Airworthiness Certificate and/or Annual Inspection of Aircraft." This form is available at all CAA aviation safety district and regional offices. It is suggested that the applicant discuss the requirements and information that must be submitted with the application at the time the form is secured. The completed application form should be submitted to the local aviation safety district office.

(c) *Information to be submitted with application.* The applicant for multiple certification should submit with the application form the following information:

(1) *Form ACA–337.* Duplicate copies of Repair and Alteration Form ACA–337 should be prepared by the repair agency. The alterations should be listed under two headings as follows:

(i) Standard configuration—the alterations to the basic type and the equipment which will remain in the aircraft in this configuration. This portion of the form should be executed in accordance with Civil Aeronautics Manual 18, Appendix A.

(ii) Restricted configuration—description of restricted category equipment and record of flight check, as specified in section 8.10–3 (d).

(2) *Conversion instructions.* Detailed step by step instructions should be prepared covering the installation and removal of the components or equipment required for each category in which certification is being sought.

(d) *Issuance of multiple airworthiness certificates.*

(1) *CAA inspection.* Upon receipt of the information specified in paragraph (c) of this section, the CAA agent will inspect the aircraft as follows:

(i) For the standard configuration, the inspection will cover conformity with the pertinent CAA aircraft specifications and airworthiness directives, compliance with Part 18 and the Administrator's policies and interpretations in CAM 18 for any alterations included in this configuration, and general airworthiness (i. e., state of preservation and repair).

(ii) For the restricted configuration, the restricted category installations will be inspected in accordance with section 8.10–3 (f).

(iii) The Repair and Alteration Form ACA–337 and the instructions for conversion will be examined for completeness. The agent, at his discretion, may require the applicant to demonstrate that the aircraft can be converted from one category to the other by simple mechanical means in accordance with the conversion instructions specified in paragraph (c) (2) of this section.

(2) *Identification marks.* Aircraft issued multiple airworthiness certificates are required to display identification and airworthiness

classification marks prescribed by section 1.101 through 1.108 of this part. If the aircraft bears the symbol "C" or "R" following the nationality symbol "N" in the identification marks, the symbol "C" or "R" should be removed prior to multiple airworthiness certification. When restricted category operations are being conducted, the airworthiness classification mark, "Restricted" should be displayed at each entrance to the cockpit or cabin.

When the aircraft is operated in the standard (passenger-carrying) category, the airworthiness classification mark "Restricted" should be removed. In order to facilitate installation and removal of this mark, it may be a separate placard fastened in place by bolts, or by any other method of attachment that is easily installed or removed. The installation and removal of this airworthiness classification mark should be incorporated in the detailed conversion instructions described in section 8.21–1 (c) (2).

(3) *Airworthiness documents.* Upon completion of the inspection, and when the agent finds the aircraft conforms to the requirements for multiple certification, he will issue a Certificate of Airworthiness, Form ACA–1362, prescribe the appropriate aircraft operating limitations, and attach to the latter the detailed conversion instructions. The original copy of the Form ACA–337 will be returned to the owner for inclusion in the aircraft records.

(e) *Converting aircraft from one category to the other.* Aircraft having multiple airworthiness certification should be converted from one category to the other in accordance with the approved conversion instructions and the following:

(1) *Nonrevenue operations.* Any certificated mechanic or pilot may convert the aircraft from one category to the other; provided, the aircraft does not carry passengers for compensation or hire.

(2) *Carriage of passengers for compensation or hire.* In order for an aircraft certificated in the multiple airworthiness classification to carry passengers for compensation or hire, the aircraft must, under the provisions of section 8.21, be inspected by a certificated mechanic having an airframe mechanic rating or a representative of the Administrator, and found to be in airworthy condition each time the aircraft is converted from the restricted category to a standard (passenger-carrying) category, unless the aircraft operating limitations, described in section 8.34–1, specifically state that such inspection is not necessary.

(i) *Scope of inspection.* The airworthiness inspection should be the equivalent of the inspection described in items 3 through 11 on the reverse side of the Periodic Aircraft Inspection Report, Form ACA–319 (Revised 11–49). The periodic aircraft inspection form may be used as an inspection guide; however, it is not mandatory.

(ii) *Recording of inspections.* A record of each such inspection should be made in the aircraft record or logbook in accordance with section 43.23 (a). This entry should include a statement as to the airworthiness of the aircraft, which should be dated and signed by the mechanic or representative making the inspection. A mechanic should include his certificate number following his signature, and a representative of the Administrator should place his designation identification and number following his signature. (For example, DAMI 01234.)

It is the owner's responsibility to determine that the inspection and recording of the inspection have been made prior to carrying passengers for compensation or hire.

(f) *Repairs and alterations to aircraft issued multiple airworthiness certificates.*

(1) All repairs and/or alterations to the standard configuration portion of the aircraft, including powerplant and propeller, must be accomplished in accordance with Part 18 and the Administrator's policies and interpretations in CAM 18.

(2) All major repairs and/or alterations to aircraft certificated in multiple airworthiness classifications must be examined, inspected, and approved in accordance with section 18.11.

(3) Repairs and/or alterations to any part of the removable equipment, not included in the aircraft in the standard configuration, may be handled in accordance with section 8.20–3.

(g) *Application of airworthiness directives.* Compliance with airworthiness directives issued by the CAA for the standard (passenger-carrying) category aircraft will be mandatory for all

aircraft certificated in the multiple airworthiness classification, without regard to the category in which the aircraft is being operated.

Published in 15 F. R. 9229, December 23, 1950, effective January 1, 1951; amended 19 F. R. 1791, April 1, 1954, effective April 30, 1954.

8.30 *Operating limitations—Administrator's authority to prescribe.* In addition to the operating limitations set forth in sections 8.31 through 8.34, the Administrator shall prescribe such operating limitations and restrictions as he finds necessary for safe operation of the aircraft and for the protection of the public.[1]

[1] Where the special purpose operations require deviation from the Air Traffic Rules in Part 60 of this chapter, a waiver of such rules must be obtained from the Administrator in accordance with the provisions of Part 60.

8.30–1 *Operating limitations (CAA policies which apply to sec. 8.30).*

(a) *General.* The special purpose operations authorized for the aircraft and the operating limitations prescribed in section 8.30 will be listed in accordance with the rules set forth in section 43.10–1 of this subchapter. The operating limitations prescribed in sections 8.31 through 8.34 will also be listed at the time of issuance of the airworthiness certificate, which is issued by a CAA representative, as specified in section 8.20–1, and carried in the aircraft in accordance with section 43.10 of this subchapter.

(b) *Agricultural aircraft.* The example of operating limitations given in subparagraph (1) of this paragraph, indicates the scope of the operating limitations which may be listed in accordance with section 43.10–1 of this subparagraph, for an aircraft certificated under Part 8 and intended for agricultural operations, such as spraying, dusting, seeding, and pest control. The CAA representative may modify these or prescribe additional aircraft limitations if he finds they are necessary for the safe operation of the aircraft and protection of the public.

(1) *Example of operating limitations.* This aircraft has been certificated under the provisions of Part 8 as a special purpose agricultural and pest control aircraft.

(i) This aircraft shall not be operated in any manner which will endanger public life and property. The operator shall adjust the takeoff weight to provide a safe margin of performance for the existing operating conditions, considering the takeoff area, altitude, temperature, and terrain. For maximum capacities of hoppers and spray tanks see placards.

NOTE.—These placards may be revised in accordance with section 8.10–4 (b).

(ii) Maneuvers shall be limited to those normally performed in agricultural operations.

(iii) Agricultural and pest control operations shall not be conducted over densely populated areas, in congested air lanes, or in the vicinity of busy airports where passenger transport operations are being conducted, unless the Administrator finds it in the public interest to authorize such operation and has issued a Certificate of Waiver or Authorization, Form ACA–663, permitting such operation.

(iv) Persons and cargo shall not be carried for compensation or hire.

(v) Persons other than the minimum crew necessary for the agricultural operations shall not be carried during these operations.

(vi) No person shall be carried in the aircraft unless a seat and safety belt, installed in accordance with good aeronautical practice is provided for his use.

(2) *Examples of additional limitations.* Examples of additional limitations which the CAA representative may prescribe for safe operation and the protection of the public are:

(i) A prohibition against sulfur dusting, unless special fire prevention measures have been incorporated in the aircraft.

(ii) A statement in the area operating limitations (subpar. (1) (iii) of this paragraph) that the aircraft is not eligible for a waiver to operate over congested areas because of uncertificated powerplant components. (See sec. 8.10–4 (d).)

(iii) Restricted engine speed (r. p. m.) ranges, if a metal propeller stress survey indicates the need for such restrictions.

(c) *Aerial advertising aircraft.* For special purpose operations such as banner towing, skywriting, and similar operations normally conducted over populated areas, aircraft limitations, such as weight, airspeed and engine limits, will be prescribed and will be essentially the same as those established under the airworthiness requirements for the basic type, unless the nature of the special purpose operations or the

design of the basic aircraft or the modifications indicate that a particular limitation should be altered. (See sec. 8.10–5.)

Published in 15 F. R. 9230, December 23, 1950, effective January 1, 1951: amended in 18 F. R. 6843, October 30, 1953, effective November 15, 1953.

8.31 *Area operating limitations.* Special purpose operations in restricted category aircraft shall not be conducted over densely popuated areas, in congested airlanes, or in the vicinity of busy airports where passenger transport operations are being conducted, unless the Administrator finds it in the public interest to allow operations in such area, in which case he shall prescribe specific operating limitations to provide the highest degree of public safety compatible with the type of operation involved.

8.31–1 *Waiver of operation limitations (CAA policies which apply to sec. 8.31).* If an operator desires to conduct special purpose operations in the areas described in section 8.31, using a restricted category aircraft, he should comply with the following procedures:

(a) *Application.* The applicant should obtain two copies of Form ACA–400, Application for Certificate of Waiver, from the local Aviation Safety District Office, and fill out both copies as follows:

(1) Type, or print in ink.

(2) Give complete information on items 1 through 7.

(3) Under item 3, insert "8.31" and describe the area. List all other sections of the Civil Air Regulations for which other authorization, permission or waiver is required, such as CAR 60.17 (b) for operation below minimum altitudes.

(4) Sign both copies of the completed application in the space provided on the reverse side for the applicant's signature.

(b) *Certificate of waiver or authorization.* After examining the application and the aircraft operation limitations, the CAA will issue a Certificate of Waiver or Authorization, Form ACA–663, where it is found in the public interest to allow the proposed operations. Where the operation conflicts with any state law or local ordinance or requires permission of local authorities or property owners, it is the responsibility of the operator to obtain such permission.

(c) *Special provisions.* The certificate will contain such special provisions as the approving agent may deem necessary in the interest of safety. Examples illustrating such provisions are:

(1) A thorough inspection of the aircraft, engine, and special equipment shall be made prior to each day's operations.

(2) A planned course of action shall be followed with emphasis on selection of available emergency landing areas.

(3) A capable and experienced pilot holding at least a commercial rating will be used.

(4) Appropriate officials of the community involved shall be notified prior to beginning the operations.

(5) Air traffic control for the area involved shall be notified prior to the beginning of the operations.

(6) Any specific precaution deemed necessary for the particular area involved.

(7) Any specific precautions deemed necessary for the type of operations involved.

(d) *Duration.* The certificate will contain an expiration date which will allow ample time for completion of the operation.

Published in 15 F. R. 9230, December 23, 1950, effective January 1, 1951; amended in 18 F. R. 6845, October 30, 1953, effective November 15, 1953.

8.32 *Economic operating limitations.* Persons and cargo shall not be carried for compensation or hire in restricted category aircraft. For purposes of this section crop dusting, seeding, and other similar specialized operations, including the carriage of materials necessary for such operations, shall not be considered as the carriage of persons or cargo for compensation or hire.

8.32–1 *Economic operating limitations (CAA interpretations which apply to sec. 8.32).* Under the provisions of section 8.32 restricted category aircraft are not permitted to carry passengers or cargo for hire. This section does not prohibit the nonrevenue carriage of personnel in addition to crew members from one location to the other; provided, the aircraft does not engage in special purpose operations during the flight.

(See sec. 8.33.) For example, an operator might fly his groundcrew to a location where special operations are to be conducted. The carriage of such persons, their personal luggage, and spare parts would not be considered as the carriage of passengers or cargo for hire or compensation. When such persons are carried, they should have available seats and safety belts, installed in the aircraft in accordance with good aeronautical practice.

Published in 15 F. R. 9230, December 23, 1950, effective January 1, 1951.

8.33 *Passengers prohibited during special purpose operations.* Persons, other than the minimum crew necessary for the purpose involved, shall not be carried during special purpose operations in restricted category aircraft.

8.33–1 *Passengers prohibited during special purpose operations (CAA interpretations which apply to sec. 8.33).* The minimum crew specified in section 8.33 includes those persons necessary to navigate the aircraft, such as pilot, copilot, and flight engineer, and such other persons as may be required to perform the special purpose operations. For example, a multiengine aircraft engaged in an agricultural operation of dispersing poison bran might be navigated by a pilot and copilot, and also have as part of its crew persons engaged in the dispersing of the bran. All of these persons would be considered crew members since each has a specific job to perform in connection with the special purpose operation. Persons other than crew members are not permitted to be carried during special purpose operations. A pilot or other crew member who is being given training in the special purpose operations may be considered an essential crew member. In such case, a charge may be made for the training in aircraft certificated under part 8.

Published in 15 F. R. 9230, December 23, 1950, effective January 1, 1951; amended in 18 F. R. 6845, October 30, 1953, effective November 15, 1953.

8.34 *Separate operating limitations for multiple airworthiness certification.* In case of multiple airworthiness certification under the provisions of section 8.21, the Administrator shall establish separate operating limitations for each category and shall specify the approved changes necessary to convert and reconvert the aircraft from one category to another.

8.34–1 *Operating limitations for multiple airworthiness certification (CAA policies which apply to sec. 8.34).*

(a) *Operations limitations.* The operating limitations referred to in section 8.34 will be prescribed by the CAA representative at the time he issues the airworthiness certificate. The prescribed operating limitations should be displayed in the aircraft in accordance with the rules set forth in CAM 43.10–1.

(1) The operating limitations for the restricted category operations will be designated as applicable to the restricted category and will be prescribed in accordance with section 8.30–1. Provisions will also be included covering the conversion of the aircraft from one category to another (see sec. 8.21–1 (c) (2)), and inspection of the aircraft prior to the carriage of passengers for hire. (See sec. 8.21–1 (e) (2).)

(b) *Conversion instructions.* The approved changes necessary to convert the aircraft from one category to the other as specified in section 8.21–1 (c) (2), are considered part of the operating limitations and should not be changed or amended without the approval by the CAA.

(c) *Owner's responsibility.* It will be the responsibility of the aircraft owner to keep the operating limitations available in the aircraft in accordance with section 43.10 (b) (1) of this chapter, and to assure that the changes necessary to convert from one category to the other are made in accordance with the approved instructions.

Published in 15 F. R. 9231, December 23, 1950, effective January 1, 1951; amended in 18 F. R. 6845, October 30, 1953, effective November 15, 1953.

APPENDIX A

Restricted Category Aircraft Modifications

397956 O - 56 - 3

Appendix A

Structural Changes

1.0 General

The airplane is one of the most carefully designed vehicles of transportation because safety and performance considerations require efficient utilization of structure from a weight and strength standpoint. Since weight is such an important factor, structural members are usually designed with little reserve strength over that to be reasonably expected in service. Consequently, when structural changes are made or equipment is added, it is essential that consideration be given to the additional loads which structural members might be required to carry and to restoring at least the initial strength of the member where it has been altered. It is also well to remember that the airworthiness of a modified airplane can never be higher than the standard set by the person altering the basic design. These facts should be impressed upon the minds of all who attempt alternations of airplane structures if a level of safety commensurate with the original airworthiness of the airplane is to be maintained.

The modification and design problems commonly encountered in the adaptation of an airplane for agricultural use are presented herein as a practical guide. Technical assistance and advice covering proposed design changes can be obtained by contacting local Civil Aeronautics Administration representatives.

1.1 Effects of Alterations on Aircraft

The two basic considerations in aircraft design are structural strength and aerodynamic (flight) characteristics. To obtain desired characteristics for a particular type aircraft, the designer must make some compromise between the most efficient structural and aerodynamic design. It is, therefore, only reasonable to assume that any changes made may affect either one or both of these basic considerations. Consequently, when changes are contemplated, the resultant effects on structural strength and aerodynamic characteristics should be considered.

1.10 *Structural.* All structural members of an airplane, whether in the fuselage, wing or tail surfaces, are put there to serve a definite purpose and are designed to carry and distribute specific loads. Often, an alteration will change the design loading of affected members due to the effects of geometrical or weight changes. Such changes are not necessarily critical nor undesirable, but, in some cases, may overstress the member beyond that load for which it was originally designed. However, in all cases the effects of an alteration should be investigated to assure adequate strength.

1.11 *Aerodynamic.* Aerodynamic characteristics normally will not be affected if the contour and center of gravity range are unchanged. However, protuberances, or changes in external contour may, for instance, increase the drag loads, and this in turn, may affect performance. Consequently, if it is necessary to install equipment such as wind driven generators or power units, spray equipment, dust venturis, etc., streamlining or fairing is often desirable to avoid serious reduction in performance.

Alterations can affect other flight characteristics. Changes in center of gravity range, increase in drag, and changes in external contour, for instance, may critically affect the climb, stall, maneuverability, and stability characteristics. Alterations can usually be made to low speed, high power loading aircraft without seriously affecting their aerodynamic characteristics. However, the foregoing should be given careful consideration if the aircraft has marginal characteristics at the outset.

1.2 Conversion of a Personal Type Airplane to One for Agricultural Use

Several of the sections of this manual contain information describing in general terms methods for converting personal and other available

aircraft for use as agricultural aircraft. These sections describe some of the current successful practices being used to install hoppers, tanks, etc. In installing such equipment, it is often necessary to modify the structure, adding or removing members, cutting holes, etc. Such modifications are usually called alterations.

Structural alterations are not always simple problems. In most cases, however, methods for accomplishing structural alterations and workmanship standards can be found in CAM 18 "Maintenance, Repair, and Alteration of Certificated Aircraft, Engines, Propellers, and Instruments" and Navy or Air Force technical orders for the particular airplane involved. Where there is doubt as to the method of accomplishing the alteration CAA personnel (agents, engineering representatives, and the regional engineering branches) are available to provide necessary information and assistance without charge. Copies of CAM 18 may be obtained from the Superintendent of Documents, U. S. Government Printing Office, Washington 25, D. C., for $1.25 per copy. Copies of many of the Air Force and Navy Technical Orders are on file or are available through the regional offices of the CAA.

In the preliminary stage of any project, it is best to take stock of what is wanted and what has to be done to accomplish the desired results. A well planned job will prevent many changes and delays.

Since personal aircraft have not been specifically designed for the needs of agricultural category aircraft, suggested steps to follow in the selection of an airplane and in the determination of typical conversions are given below for your guidance.

1.20 *Ideal Characteristics of an Agricultural Airplane.* An ideal airplane for agricultural use would embody the following features:

(a) High payload in proportion to gross weight.

(b) Short landing and takeoff distance with full load.

(c) High maneuverability.

(d) Slow speed for spraying or dusting (40 to 60 m. p. h.) with a higher cruising speed (100 to 150 m. p. h.).

(e) Unrestricted visibility forward, laterally and downward. (See sec. 7 of this manual for further details.)

(f) Rugged construction, particularly in the landing gear, to permit continuous operations from rough fields.

(g) Low operating and maintenance costs.

(h) A high degree of safety and dependability.

(i) All parts resistant to corrosive action of sprays, dusts, or other chemicals.

(j) Favorable aerodynamic design (smooth airflow characteristics) to permit maximum uniform disposal of spray or dust.

(k) Adequate reserve power for emergencies.

(l) Good flight characteristics when flying low, diving, climbing, and turning, and at low speed.

(m) Easy and convenient operation of controls to enable the pilot to perform other duties such as operation of cutoff valves, hopper gates, etc.

1.21 *Selection of an Airplane for Modification Purposes.* A completed airplane is in many ways a compromise of knowledge, experience, and desires. The airplane design is also the result of a compromise between aerodynamic and structural efficiency. These compromises are necessary to obtain the operating characteristics desired. After reviewing the above standards for an ideal agricultural airplane, it will be realized that all these conditions are not available in any single personal type airplane.

Current models will have some but not necessarily all of these characteristics and in selecting a particular airplane some compromises must be made to obtain the airplane which most nearly meets the need and requires the least expenditure to modify.

1.22 *Suggested Procedure for Conversion of a Personal Type to an Agricultural Type Airplane.*

(a) Determine what is desired.

(1) Dusting equipment installation.

(2) Spray equipment installation.

(3) Combination of (1) and (2).

(4) Pay load (hopper or tank capacity).

(5) Engine change.

(6) Increase in gross weight.

(7) Change in flight characteristics.

(8) Modification of landing gear.

(9) Change in geometric configuration of the fuselage.

(b) Determine design of hopper or spray tank.

(c) Determine design of hopper venturi or spray boom.

(d) Determine structural modifications necessary for hopper or spray tank installation and how to accomplish.

(e) Determine power source for pressure pumps or agitators, that is, whether the power source will be taken from the engine or a wind-driven unit.

(f) Determine location and installation of agitator or pump power unit.

(g) Determine location and installation of spray booms.

(h) Determine materials to be used.

(i) Check weight change.

(j) Make a preliminary weight and balance check.

(k) Check the alteration for flight characteristics.

(l) Check the conversion for cost.

1.3 General Rules for Proper Alteration of the Aircraft Structure

This manual will concern itself mainly with alterations involving the installation of dusting, seeding, and spraying equipment. It is not within its scope to cover all possible alterations that may be contemplated in the field; consequently, the manual will be restricted to general considerations only.

1.30 *Reinforcement of Open Bays in Primary Structure.* When structural members are removed thus forming open bays, reinforcements are necessary to restore the airworthiness of the airplane. An open bay is a square or rectangular opening without cross-diagonal bracing members. A typical open bay CDHI is shown below in Figure 1–1. Bays ABFG and DEIJ are closed bays.

As a precautionary measure we repeat again that every structural member of an airplane is designed to carry and distribute the specific loads imposed upon it in the airplane's original intended operations. Whenever one of these members has been removed, additional loads are imposed upon other members which were not designed for these additional loads and the original continuity of the structure is destroyed. When it becomes necessary to remove a structural member, it is most important that the continuity and original distribution of loads be restored by adding reinforcements or installation of additional members.

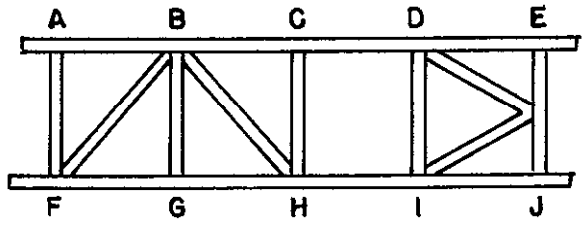

Figure 1–1. Open Bay in Primary Structure (see 1.30).

When a diagonal member is removed, such as B–H in Figure 1–1, resulting in an open bay, it may be possible to restore this bay to its original airworthiness condition by adding diagonal members as shown in bay CDHI of Figure 1–2. The open bay will usually be restored to its original strength if the diagonal members are made of the same gage alloy and size tubing as the tube removed.

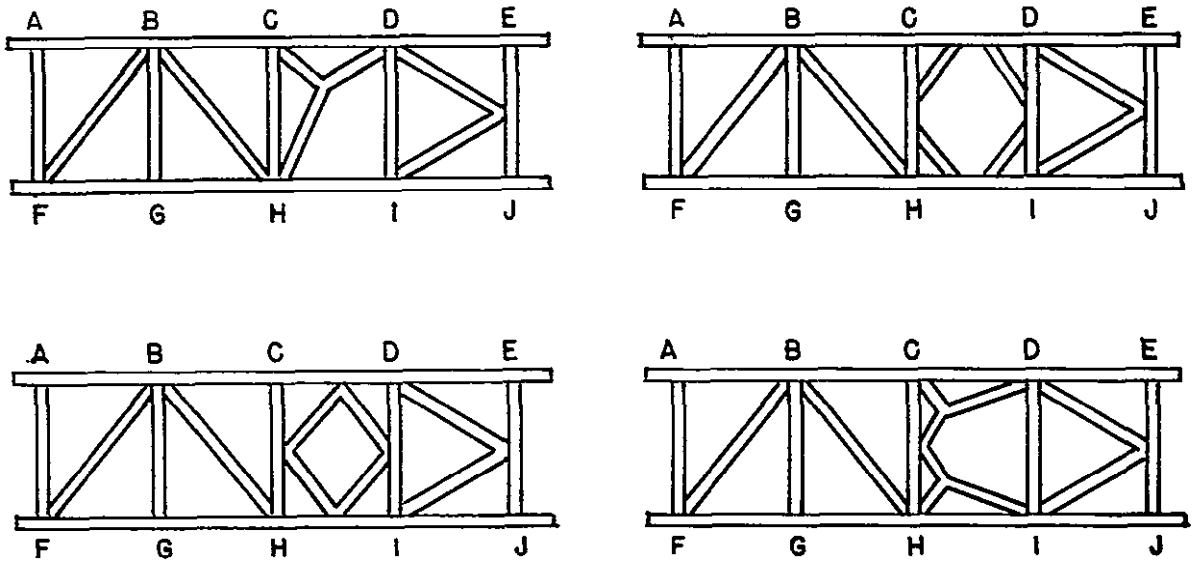

Figure 1–2. Reinforcing Open Bays (see 1.30).

Open bays of small dimensions have been satisfactorily restored, as shown in Figure 1–3. In such cases sheet metal or tubular gussets are added at each corner of the open bay. These chrome-moly steel (SAE 4130) sheet metal gussets are usually of the triangular, one-piece design or are folded into a U shape with the apex of the triangle being the open end. A sheet or tube thickness of about 0.035 has been satisfactory in most cases. Both of these types are then welded to the two tubes forming the corner of the open bay. This type of alteration can generally be made in the top or bottom trusses of steel tubular fuselages, but should be made in side trusses only where the alteration is thoroughly checked for adequacy.

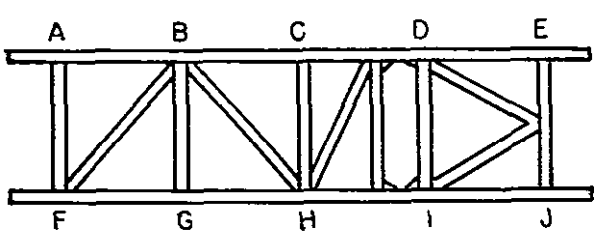

Figure 1–3. Reinforcing an Open Bay of Small Dimensions (see 1.30).

1.31 *Cutting Holes in Stress Skin Structures.* If possible, the cutting of openings in stressed skin structures should be avoided. If this is not always possible or practical, the edge of the opening should be reinforced to maintain the original strength of the basic structure adjacent to the cutout. For relatively small openings, such reinforcement could logically consist of a doubler plate extending completely around the opening. The dimensions of the plate and the number and size of rivets can be obtained from CAM 18 or similar repair manuals.

1.32 *Changes to or Removal of Stringers or Rings.* If possible, avoid cutting stringers, bulkheads, or bulkhead rings. If this cannot be avoided, equivalent reinforcements should be added to avoid any reduction in strength. It is often desirable to contact the aircraft manufacturers or the local CAA engineering representative or engineering branch for their assistance prior to undertaking any extensive modifications to stressed-skin structures.

1.33 *Installation of Power Units for Pumps and Agitators.* Wind-driven power units operate pressure pumps, mix spray materials, prevent dusting materials from packing, and feed these materials into the dispensing throat or spray boom at a uniform rate. Sometimes the airplane engine is the source of power, but usually external wind-driven units are used. All power units should be of rugged construction to minimize failure and servicing. Essen-

tial principles of design and installation are outlined below:

1.330 *Wind-Driven Units.* The propellers of wind-driven units often fail and the flying blades slash through anything in their path. Accordingly, wind-driven units should be located so that the plane of the propeller disk does not intersect any portion of the pilot's cockpit unless a protective strip of metal or other material is placed between the propeller and the cockpit. In addition, if at all possible, the plane of the propeller disk should not intersect the fuel tank, fuel lines, oil lines, or hydraulic lines. Metal propellers have been particularly hazardous in this respect.

A sheet of 0.032 heat treated aluminum alloy 24S or 75S material or ¼-inch plywood or equivalent will usually furnish adequate protection against blades from power unit propellers.

1.331 *Wind-Driven Unit Controls.* Means for interrupting the power output should be located as near the unit as possible. Probably the most satisfactory method of accomplishing this is by means of a manually operated rotor brake. Thus, by stopping the rotor, the output of the unit is stopped. This brake performs two functions, one to control the power output for dusting or spraying needs and the other to stop the unit in case of failure. Under no load conditions, this would prevent overrunning of the unit which might cause complete disintegration of the power unit and extensive damage to the airplane.

Means of stopping the unit is particularly important for gear type pumps as the pump will seize if operated dry. The centrifugal type pump usually will not seize. However, when the centrifugal type pump is not pulling a load, the fan will overrun and possibly throw the blades.

1.332 *Wind-Driven Generator Power Source.* If the power unit is a wind-driven generator, additional precautions are necessary. Refer to Section 5.4 of this manual, "Electrical Installations."

1.333 *Power Units Locations.* Wind-driven power units should preferebly be located where extensive damage to the airplane will not result in event of failure of its propeller. The underside of the fuselage is a desirable location. In this location an installation can usually be made using the fuselage or landing gear structure for support. In some cases installation has been made on the wing lift struts. Precaution should be taken in making installations of this latter type since vibration from the power unit in operation or as a result of a partial failure may cause failure of the lift struts or wing. The power unit in these cases should be installed as near as possible to the lower end of the strut, but may also be installed at the jury strut attachment. Usually, installations should not be made on the strut if other locations are available.

1.334 *Adaptation of Automobile Engine Fans.* The use of automobile engine fans require certain precautions. Usually, automobile engine fans are not designed for the high speeds obtained when installed on an airplane. In all cases, a sturdy fan should be selected. It may be necessary to reinforce the blade attachment be replacing the fan blade attachment rivets with high shear aircraft rivets. In some cases additional rivets may be necessary. Any "automobile" bolts in the fan should be replaced with aircraft bolts. The bolts should be safetied.

1.4 Attachment of Hopper or Tank to Primary Structure

(See sec. 2.30 for suggestions on design of hoppers and tanks and section 2.304 for information on method of determining hopper c. g.)

Hopper loads or tank loads should be carried as directly as possible to the fuselage panel points (the points where structural members intersect). This can be accomplished by proper location of the attachment fittings. In some cases it may be necessary to transmit the hopper loads through supporting beams and from these to the panel points. Hopper or tank loads should be carried to as many panel points as possible. Avoid concentrated loads in the midspan of longerons or other members of the primary structure unless suitable reinforcements are made. Strength should be provided in hopper attachments for downward, upward, forward, and sideward acting loads. Figure 1–4 shows representative methods of transmitting hopper or tank loads to the panel or tube intersecting points. Do not drill holes in fuselage

members and avoid welding in midspan of members.

A simple means of suspending the tank or hopper and at the same time taking full advantage of load distribution would be to attach wood or metal strips to the side of the hopper to act as bearing strips. These bearing strips which will ride on top of the longerons should run the full length of the hopper. Other strips should be long enough to transmit side, fore and aft, and up loads to the side member without overloading them locally. In some cases, it is not possible to make these strips continuous since fuselage structure members would inter fere. In Figure 1–4 vertical load is distributed to three panel points per side; three supports per side are considered good, but the more supports the better. If only two panel points were accessible, the bearing strip method would be preferred.

buckles and webbing are also satisfactory, but care should be taken to provide adequate strength for flight conditions as well as minor crash conditions. Section 4 in this manual contains information on the loads that may be expected in minor crashes as well as the direction in which these loads may be expected to act.

1.5 Boom Installations

Spray booms are usually located spanwise and relatively close to the lower wing of biplanes or to the wing of low-wing monoplanes. In some cases this is approximately 9 inches. In high-wing monoplanes the boom is usually installed spanwise and at an angle with reference to the wing. The boom extends from the tank connection up toward the wing tips. Line

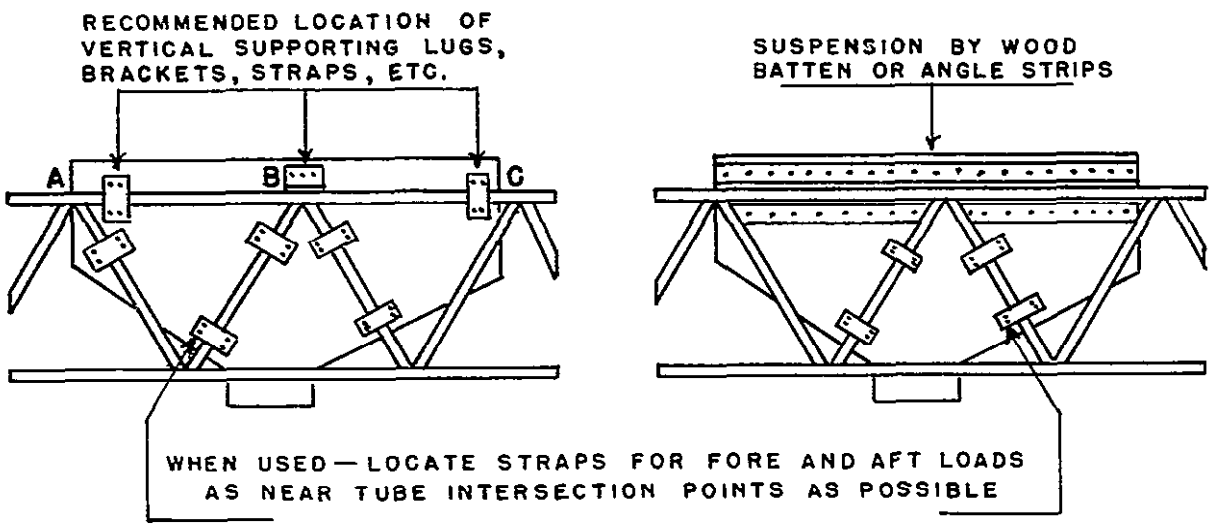

Figure 1–4. Hopper or Tank Installation (see 1.4).

As indicated in Figure 1–4, the hopper or tank should also be supported in the fore and aft and lateral directions (see discussion under Pilot Safety Items, sec. 4). This is sometimes done by using several straps or lugs to attach the hopper to the vertical members of the fuselage structure. This method is satisfactory if such attachments are made near the longerons. Midspan attachments should be avoided. Other means such as using cables and turn

sketches of these installations are shown in Figure 1–5.

The boom pipes are generally suspended from the wing spars, utilizing either the front or rear spar. When two spar construction is used, booms are sometimes connected to both spars as shown in the Figures 1–6 and 1–7. The spray booms are usually suspended at only four points. Sketches showing typical boom installations are illustrated in Figure 1–5.

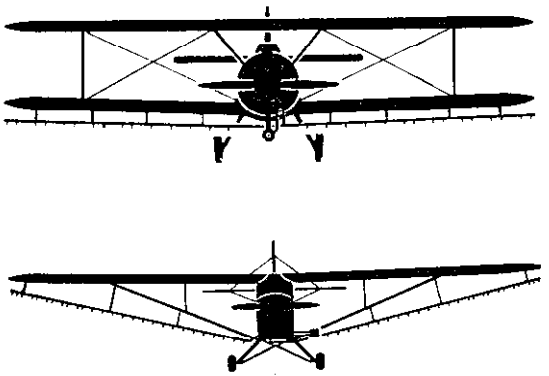

Figure 1–5. Spray Boom Installation (see 1.5).

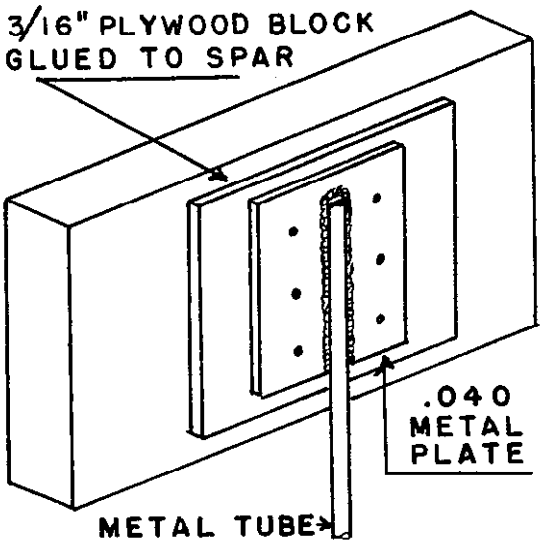

Figure 1–6. Attachment of Spray Boom Supports to Wing Spars (see 1.5).

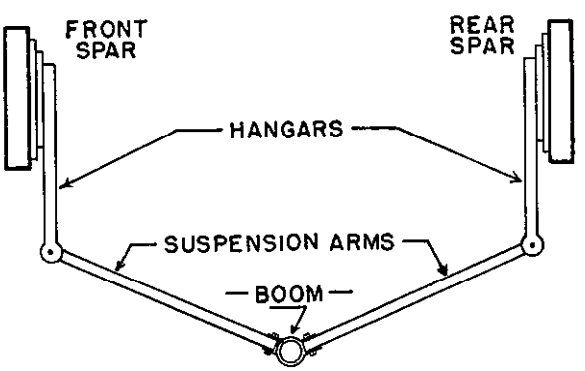

Figure 1–7. Typical Spray Boom Installation Supported by Front and Rear Spars (see 1.5).

Installation of hanger straps attached to wood spar by glueing has been found satisfactory. This has been accomplished in Figure 1–6 by using 3/16-inch plywood blocks with prefabricated metal plates of 0.040-inch material with a tube welded thereto and assembly riveted to the plywood block. The block is then glued to the face of the spar. The spray boom is usually bolted to the tube for easy removal. Such hangers may be put on both spars by suspending the spray boom between the two hangers. Figures 1–6 and 1–7 illustrate typical installations of this type.

When wing compression members are bolted to the spar a plate similar to that described in Figures 1–6 and 1–7 can be used and may be bolted to the spar using the compression member bolts. The plywood block is not used in this case, but the metal plate should be the same or greater thickness than that of the washer removed. This plate is installed on the forward face of the front spar and rear face of the rear spar in order not to change the compression member. Please note: Do not drill new holes in the spar of these installations!

Booms installed inside the wings with only the nozzles protruding through the wing covering can also be installed in this manner.

1.6 Corrosion Protection

Practically all chemicals used in dusting and spraying operations are corrosive by nature and hasten deterioration of fabric, metal, and wood. It is essential to safe operation that precautions be taken to prevent corrosion and deterioration of wood, metal, and fabric. Cleanliness of the airplane is one of the most important precautions of all. If it were practicable and feasible to clean the airplane thoroughly, that is, give it a thorough washing inside and out after each day's work, probably no special corrosive preventative measures would be necessary. Since this thorough daily cleaning is not practicable, the following precautions should be taken:

(a) All fittings and metal structure should be covered with two coats of zinc chromate primer, paralketone, or similar materials. This coating should be applied to items such as wing-root fittings, wing-strut fittings, control-surface hinges, horns, mating edges of fittings and attach bolts, etc.

(b) Nonstainless steel control cables should be coated with paralketone or other similar protective coating, or should be replaced with corrosion-resistant cables.

(c) Periodic inspection should be made of all critical portions of the aircraft structure. Structural parts showing corrosion should be cleaned and refinished if the corrosion attack is superficial. If the part is severely corroded, it should be replaced with corrosionproof parts.

(d) Provision for additional inspection openings should be made to facilitate easy inspection. Experience has shown that access openings to permit ready inspection of lower and rearward portion of the fuselage are particularly desirable. These openings are in addition to the openings which are normally required to permit access to the wing and control surface hinges and attachment fittings.

(e) Additional provision for drainage and ventilation of all interiors should be made to prevent collection of moisture.

(f) At the time of recovering both metal and wood airplance structural members should be coated with zinc-chromate primer (two coats), followed by dopeproof paint or wrapping with cellophane tape.

(g) Interiors of metal covered wings and fuselages should be sprayed with an adherent corrosion inhibitor.

(h) Exterior surfaces should be washed with clear fresh water at least once a week. Interior surfaces should also be washed, taking care to prevent damage to electrical circuits or other items subject to malfunctioning due to moisture.

(i) Openings in the wings, fuselage, and control-surface members, such as tail-wheel wells, openings for control cables, etc., should be sealed as completely as possible to prevent entry of dust or spray.

Dispensing Equipment Design Criteria

2.0 General

2.1 Sources of Information on Equipment Design

2.10 *Department of Agriculture.* The Department of Agriculture, in recent years has devoted much effort to the development of dusting and spraying techniques. Forest pest control, seeding, dusting, weed control, spraying, etc., have all been studied extensively. The Department of Agriculture has thus developed both equipment and techniques for various agricultural applications. Detailed descriptions of spraying and dusting equipment and installations are available on request from the Department of Agriculture. They will also supply information on request as to techniques of using the recommended equipment. Inquiries should be addressed to:

Bureau of Entomology and Plant Quarantine,
Agricultural Research Administration,
United States Department of Agriculture,
Washington 25, D. C.

Publications which have been issued by the Department of Agriculture of interest to crop dusting and spraying operations include the following:

Equipment for Dispersing Insecticides from Aircraft.
Equipment for the Dispersal of DDT Insecticides by Means of Aircraft.
Spray Equipment for a Stearman N2S Airplane.
Aircraft for Spraying and Dusting.
A Hopper and Mechanism for Distribution of Baits and Dust by Airplanes for Insect Control.
The Use of Aircraft in the Control of Crop Pests.
A Bibliography of the Use of Airplanes in Insect Control from 1922 to 1933.
Machinery for Dusting Cotton.
Suggestions Regarding the Use of DDT by Civilians.

2.11 *Periodicals—Manufacturers of Insecticides—State Universities.* The following articles are also recommended for general information on crop dusting:

"Crop Dusting from Cubs" by F. H. Ponish, Aviation Maintenance magazine, October 1945.
"Insect Spraying for Profit" by Robert C. Blatt, Aviation Maintenance magazine, December 1945.

Manufacturers of dusting and spraying materials as well as various aviation associations have made extensive studies in this field and will be willing to provide you with information upon request. Many of the agricultural colleges of the State universities conduct extensive research of spraying and dusting equipment. In this respect it is suggested that you contact your State department of agriculture for information and publications.

2.12 *Civil Aeronautics Administration's Approved Dusting and Spraying Equipment Installation.* Various persons, aircraft manufacturers, and other organizations have developed dusting and spraying equipment suitable for installation on available aircraft. The CAA has, in many cases, approved specific kits which, in general, include all parts and installation instructions necessary to readily convert available aircraft to a duster or sprayer. These approved kits have been checked aerodynamically and structurally by the CAA and may be installed without adversely affecting the airworthiness of the aircraft in a dangerous manner. CAA approved kits will be found listed in the particular aircraft specifications issued by the CAA for each aircraft model. Copies of these specifications may be obtained without charge from your local CAA Aviation Safety Agent or by writing to the CAA, Washington 25, D. C.

2.2 Dispensing Equipment

In many instances commercial equipment to do the required job may not be available and some operators will choose to design their own equipment or modify commercial equipment to suit their needs. There are many factors which should be kept in mind when attempting to convert a commercial unit which has been spe-

cifically designed for a particular airplane, for use on another model airplane, or constructing a completely new design. The data presented here will, in general, be applicable to either new or revised installations.

The geometric design of dispensing equipment should be accomplished taking into account the information in the "Structural Changes" part of this manual; means of supporting equipment are discussed in that portion of this manual. Structural design of the equipment, tanks, spray booms, etc., are covered, in general, in the following sections. Structural design of the dispensing apparatus concerns two major items; these are, structural ability to satisfactorily carry the anticipated loads, and preventing leakage of fluids or dust thereby protecting the pilot against noxious dust and liquids as well as from fire hazards. General considerations covering structural design problems commonly encountered with dispensing equipment are as follows:

2.3 Dusting Equipment Design

Dusting equipment usually consists of the following major components: A hopper, a venturi, an agitator system, and a valve. The structural design will in general be determined from the materials and equipment available. However, certain precautions or good practices should be followed.

2.30 *Hoppers.*

2.300 *Materials.*

(a) The hopper can be made from practically any material available. Hoppers have been constructed of aluminum, stainless steel, galvanized sheet, plywood paneling, and even canvas. The capacity and general design of the hopper in most cases will determine the thickness of the construction material and just how much reinforcing is necessary. The general comments on corrosion protection of section 1.6 should be taken into account in the design and construction of the hopper.

Thickness or gages of material which have been used and found satisfactory are:

(1) 24 ST aluminum 0.040 to 0.062 inch.

(2) Stainless steel and galvanized sheet 0.035 inch.

(3) Plywood (3-ply spruce or equivalent) ¼ inch.

(4) Canvas.—This material is not usually recommended, but if used special precautions should be taken to provide adequate reinforcing structure to take fore and aft and side loads. Any one of several good grades of heavy canvas duck material can be used.

2.301 *Reinforcing of Hoppers.* Stiffening angles or T's should be used on at least the front and rear face of the hopper. Reinforcements of this type are also recommended for the sides of the hopper. The material and size of angle can be determined from its construction. The use of stiffening angle or T's of 1 x 1 x ⅛ inch, 24 ST material will be found satisfactory in most cases.

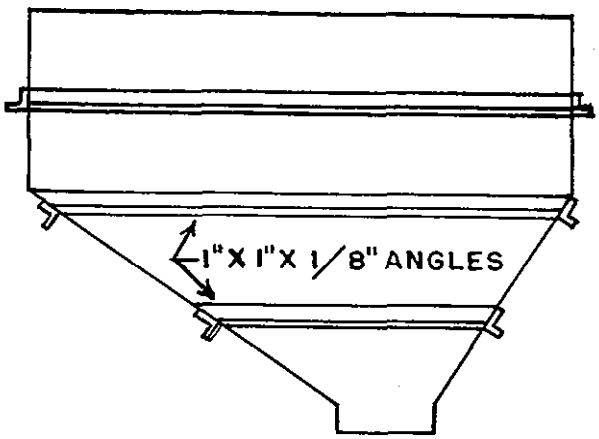

Figure 2–1. Reinforcing Sides of Hoppers (see 2.301).

2.302 *Hopper Seams.*

(a) Many different types of seams such as welded, riveted or bolted seams may be satisfactorily used. Since most hoppers are of odd shape design the most practical seam may be one using a corner angle with the sides riveted to it as in the sketch (Fig. 2–3). Such use of the angle will also provide vertical stiffness. In these cases it has been found that 1 x 1 x ⅛-inch 24 ST aluminum angles using a double row of alternately spaced ⅛ A17 ST rivets have been the most widely used.

Where it is necessary to splice a sheet the lap joint or full fell seam can be used satis-

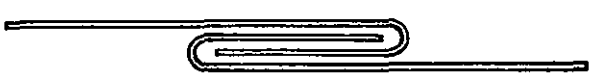

Figure 2–2. Full Fell Interlocking Seam (see 2.302).

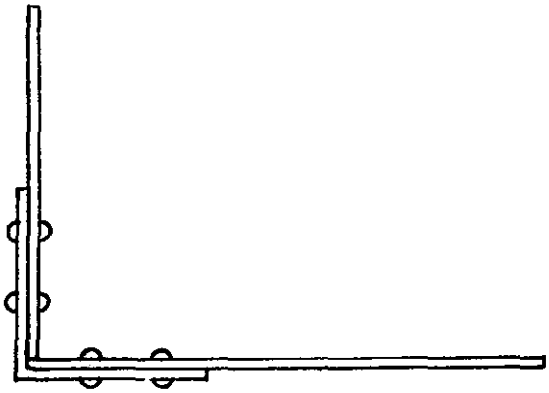

Figure 2–3. Angle Reinforced Corner (see 2.302).

factorily, Figure 2–2. For the lap joint a double row of staggered rivets should be used. The full fell seam may be found satisfactory without riveting where a generous application of stiffening angles has been used. However, riveting those seams is recommended.

All joints or seams should be made sufficiently tight to prevent leakage of dust. This is important for pilot safety and cleanliness of the airplane. Sealing compounds will help assure joint tightness but they add no strength. Any one of several methods could be used to provide a tight joint.

(1) A well riveted joint using two rows of alternately spaced rivets will be sufficiently tight to prevent leakage of dust. However, further precaution may be taken as in items (2), (3), and (4) below.

(2) The seam may be leaded using a torch or soldering iron after construction.

(3) Fabric reinforcing tape may be doped to the inside or outside of the corner of seam or both.

(4) Sealing compounds such as those used in the sealing of seams in gas tanks may be used satisfactorily.

2.303 *Hopper Doors (Loading Door).*

(a) The loading door construction is very important and consideration should be given in the design to the pilots' protection and efficient hopper loading. The door should be sturdy with positive locking features. It should also be designed airtight. The top of the hopper may be curved and faired in as part of the airplane. In this manner no auxiliary fairing for aerodynamic reasons is necessary and it facilitates loading since it is necessary to open only one door. For convenience let us list here the main items of the door that should be considered.

(1) Door size.—The door should be of adequate size and be located in the top of the hopper, to facilitate and expedite loading procedures.

(2) Sturdy construction.—The door should be well built to take the hard treatment that will be given it by the loaders in opening and closing the door. A well built door will eliminate a great deal of the troubles generally experienced with doors being difficult to close properly.

(3) Hinges.—Various types of hinges are used, their strength not being a major consideration, since the door does not carry heavy structural loads. Care should, however, be exercised in the selection of door hinges since the failure of these hinges could result in serious damage to the airplane or injury to the pilot. If practical, the hinges should be installed on forward side of door so that the air stream tends to close the door.

(4) Positive latching mechanism.—This is important since many near accidents have occurred due to the door coming open on takeoff and in flight. The latching mechanisms should be simple and easy to operate. Many types of fasteners are used such as a winged dzus type fastener, an over center latch commonly known as a suitcase or trunk latch, a cam actuated bolt latch or many others which can be easily and readily operated.

(5) Door seals.—Provide a seal around door which will prevent leakage of dust.

2.304 *How to Determine the Center of Gravity, Volume, and Weight of a Hopper.* In almost all cases it is essential that the c. g. of the modified airplane be kept within certain limits. To aid in this and to prevent costly mistakes, it is advantageous in the preliminary design stages to know the approximate c. g. and volume and weight of the hopper. This approximate c. g. and volume of the hopper will permit calculations of the effect of the hopper installation on the weight and balance of the airplane.

The c. g. and volume can readily be calculated for square or rectangular design, however, many hoppers are odd shaped due to the configura-

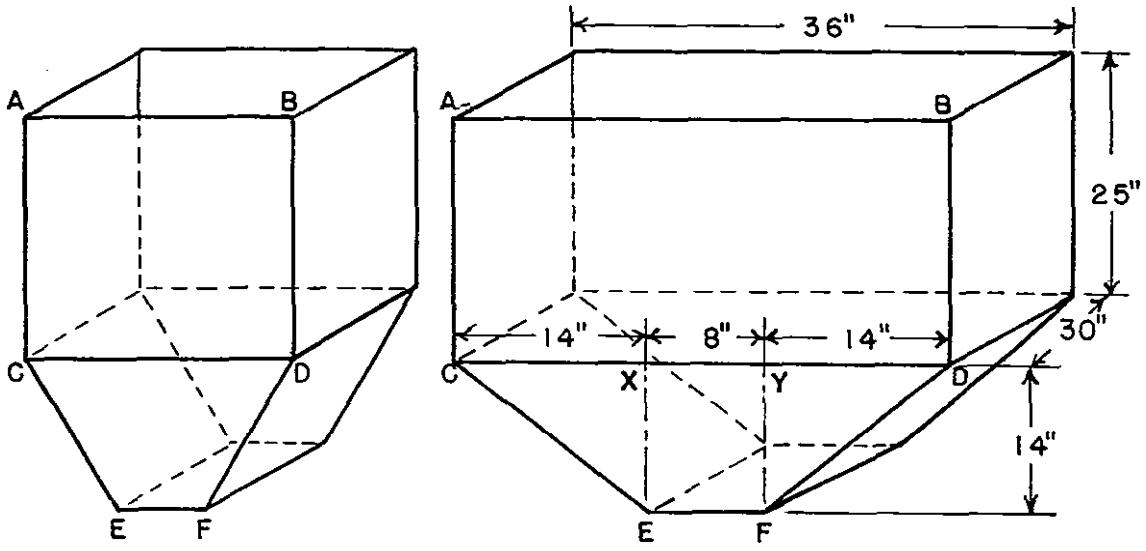

Figure 2-4. Symmetrical Hopper c. g. Computation (see 2.3040).

tion of the available space in the airplane. For preliminary design purposes complex calculations usually are not necessary, close approximations being sufficient. The following examples cover most cases usually encountered.

For the symmetrical hopper it will be noted that the empty and fully loaded hopper c. g. will be identical, but in nonsymmetrical designs the partial loaded c. g. will usually differ from the empty c. g., in which case it may be advisable to also compute the c. g. of a partially loaded hopper.

In all cases, only the horizontal or fore-and-aft c. g. will be considered since airplane, loading restrictions are based on the fore-and-aft c. g. locations, the vertical locations not being considered because of their small effects on performance and strength.

2.3040 *Square or Rectangular Design.* The horizontal c. g. of a symmetrical designed hopper or tank is the center of the top line of the side of the hopper or tank. In the case of the symmetrical hoppers in Figure 2-4, as long as ABCD is either a square or a rectangle and CE and FD are equal, the horizontal c. g. is the middle of line AB.

The volume and weight of each of these containers are determined in the same way so only one example will be given. Assume that the dimensions of the symmetrical rectangular container are as shown on the above sketch. The side of the container is divided into parts which are easily calculated. Next, divide the lower portion of the container into two triangles and a rectangle as shown. The dimensions can be calculated or measured from a scaled drawing of the proposed design. The volumes are then computed as follows:

Area of the side panel is:

Area of ABCD $=36\times25=900$ square inches.

Area of CEX $=\frac{14\times14}{2}=98$ square inches.

Area of XYEF $=8\times14=112$ square inches.

Area of YFD $=\frac{14\times14}{2}=98$ square inches.

Total area of side panel $=1,208$ square inches.

This multiplied by the width gives the volume in cubic inches.

$1,208\times30=36,240$ cubic inches.

The volume in cubic inches multiplied by the weight per cubic inch of the insecticide or dust to be used will equal the weight of the hopper or tanks contents.

To convert this volume into cubic feet, we divide 36,240 by 1,728 which is the number of cubic inches in a cubic foot. The volume in cubic feet is then $\frac{36,240}{1,728}=20.97$ cubic feet.

2.3041 *Odd Shaped Designs.*

(a) Determining c. g. by moments:

(1) First, a side view of the hopper is drawn to scale.

(2) Divide the side view into right angle triangles and rectangles. In this example the right angle Triangles are AA'C, CC'E, and D'DF. The rectangles are A'BCD and C'D'EF. For convenience these rectangles and triangles are designated by letters (A), (B), (C), (D), and (E) (see Fig. 2–5).

(3) Scale the horizontal sides of the triangles and rectangles.

(4) On the horizontal side of the triangles take 2/3 of the length and layout this distance on the drawing from the acute angles of the triangle. These distances are the horizontal locations of the centroids or center of gravity of the triangles. The similar horizontal centroids of the rectangles or squares are of course located at 1/2 the horizontal side of the square or rectangles.

In this example the horizontal centroid locations are:

For triangle (A), 10 inches measured from A.

For rectangle (B), 10 inches measured from A'.

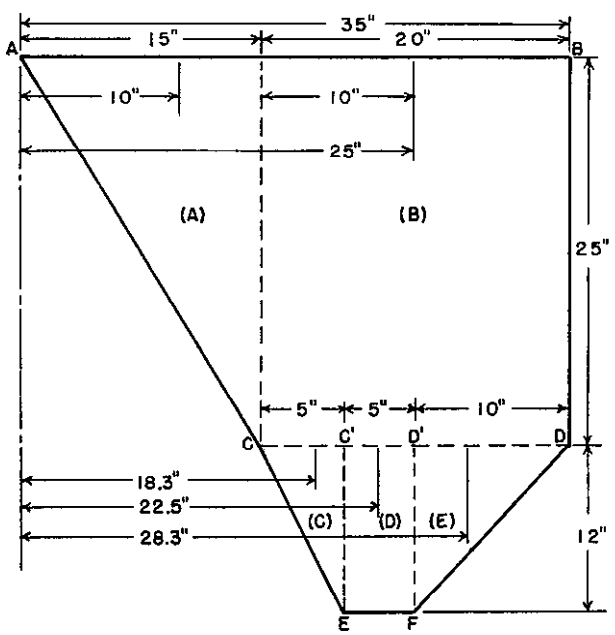

Figure 2–5. Odd-Shaped Hopper c. g. Computation (see 2.3041).

Triangle (C), 3.33 inches measured from C.

Rectangle (D), 2.5 inches measured from C'.

Triangle (E), 6.66 inches measured from D.

Since all of our measurements will eventually be made from point (A), let us compute the horizontal centroid for (E) also from the left. The horizontal side of the triangle is 10 inches, therefore, if we substract the 6.66 inches from 10, we have 3.34 inches from point D'.

(5) Compute or scale on the drawing the horizontal centroid distance of each triangle, rectangle, or square from some point such as A. To carry through for our problem these distances would be:

Triangle (A) 10 inches.

Rectangle (B) $15 + 10 = 25$ inches.

Triangle (C) $15 + 3.33 = 18.3$ inches.

Rectangle (D) $15 + 5 + 2.5 = 22.5$ inches

Triangle (E) $15 + 10 + 3.34 = 28.3$ inches.

(6) Compute the area of each triangle, square and rectangle. The area of a right angle triangle is the product of the sides of the right angle divided by two, for example, the area of triangle (A) is equal to $\frac{15 \times 25}{2} = 187.5$ square inches, The area of the triangle and rectangles are:

(A) = 187.5 square inches.
(B) = 500 square inches.
(C) = 30 square inches.
(D) = 60 square inches.
(E) = 60 square inches.

The total area is 837.5 square inches.

(7) The next step will be to take moments about point A since that is the point that was selected to take our measurements in (5) above. This will result in a summation of the moments of the triangles and rectangles in which our problem was originally divided (see Fig. 2–5).

The moment is the product of the area times the distance of its centroid or center of gravity from the point selected about which the moments are to be taken. The point can be any one of convenience.

Area		C. G. with Reference to datum selected		Moment
(A)	187. 5	× 10	=	1, 875
(B)	500	× 25	=	12, 500
(C)	30	× 18. 3	=	549
(D)	60	× 22. 5	=	1, 350
(E)	60	× 28. 3	=	1, 698
Total	837. 5			17, 972

$$\text{Total } \frac{M}{A} = \frac{17,972}{837.5} = 21.5 \text{ inches}$$

This is the horizontal distance of the c. g. of the container from the point A originally selected for the problem. Since the container was assumed to have symmetrical or identical opposite sides, the horizontal c. g. of the container becomes 21.5 inches from point A. If it is assumed that Point A is 12 inches from the datum of the airplane, then the hopper c. g. will become 21.5+12=33.5 inches from the airplane datum. This c. g. is the one used in the weight and balance calculations for the entire airplane.

(8) Only areas and distances have been considered in this problem. However, it is realized that when the container is laid out on paper it is desirable to know how much it will hold and how much it will weigh. This can be readily determined by multiplying the total area calculated in part (6) above by the width of the container. For this problem let's assume the hopper to be 30 inches wide. The volume then becomes 837.5 square inches from item (6) above×30 inches=25,125 cubic inches. The weight will be the volume multiplied by weight of the contents in pounds per cubic inch.

2.3042 *Any Shape Design (Simple Method).* A simple and quite accurate method of finding the center of gravity position of a hopper is as follows. A full-scale template of the side of the hopper is made by laying out or drawing to full-scale a side view of the hopper on a piece of cardboard, plywood or metal and trimming along the outside lines. The center of gravity of the loaded hopper will lie at the center of gravity of the template and can be found by finding the place along the upper edge of the template where the template will hang in the same position as that of the hopper in the airplane. To locate this place first suspend the template by holding its upper edge between your fingers. Once the place is found where the template hangs in proper position, check the position accurately by substituting a loosely driven nail or small pin for your fingers. The center of gravity of the template and of the full hopper will lie on a vertical line passing through the suspension point and the horizontal position of the hopper c. g. will have been located. If the vertical position of the c. g. is to be found, the same procedure may be used except one of the side edges should be used as the pivot edge. As before, the c. g. will lie on a line directly under the new pivot point and the point where the first line found crosses the second line will be the center of gravity of the loaded hopper.

2.31 *Agitators.*

(a) The agitator performs an important function in feeding the dust into the venturi vent at a uniform rate. The agitator and its installation should therefore be of rugged construction to eliminate many of the troubles encountered. (Refer to sec. 1.6 for corrosion prevention information.) Mechanical troubles are, however, usually minor except for the possibility of fires. It is possible to ignite sulfur dust and probably others by sparks which will be generated if a steel or other ferrous metal blade strikes the sides of the hopper or any small piece of metal such as pieces of wire, bolts, nuts, etc., that invariably get into the hopper. Friction created by a poorly alined bearing installation will create sufficient heat in some cases to cause a fire. A poor bearing installation in connection with an agitator that flexes under load will also require an excessive amount of power to operate. The following items are suggested for consideration in the agitator construction and installation. (For information on the agitator power unit see sec. 1.33.)

(1) Use nonferrous metal blades to reduce spark hazard.

(2) Use sealed bearings or make provision for lubrication.

(3) Support the bearing installation in the sides of the hopper as well as possible.

(4) Securely attach agitator blades.

(5) Properly aline bearing and agitator shaft installation.

2.32 *Venturi.* A device called a venturi is usually used to mix dust from the hopper with a large amount of air, thus obtaining a uniform

and wide distribution. The venturi's action is to produce a rapid flow of air and a low pressure area at its minimum cross sectional area. To obtain the best dust mixing and flow characteristics, the hopper opening should be at the minimum cross section of the ventur. Although the venturi is primarily designed to spread the discharged dust in the most satisfactory manner it must also be considered from both a structural and an aerodynamic point of view. We will not attempt to discuss further, in this publication, the most effective types of venturies. We will, however, outline some structural and aerodynamic considerations in the following items.

2.320 *Design.* It was pointed out in section 1.11 that a protrusion or changes in the geometric configuration of an airplane will change the airflow characteristics about the plane and may increase the drag loads and reduce the aerodynamic efficiency of the design. The venturi will work only if it protrudes into the airstream, therefore, it will have a real effect on the aerodynamics of the airplane. Since it is necessary to have the venturi as a dispensing means, we should strive to keep its effective drag as low as possible and, thus, its effects to a minimum. This can usually be done by keeping its size as small as possible and using a clean design and avoiding abrupt changes in contour.

A generally satisfactory design which has been used quite extensively has a straight top surface and an airfoil section for the lower surface. A cross sectional view of this venturi is shown in Figure 2–6.

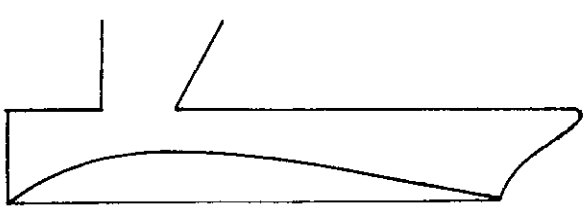

Figure 2–6. Sketch of Venturi Cross Section (see 2.320).

A common error in designing the lower surface is to form the airfoil section by riveting two sheets of metal together at the leading edge as shown below:

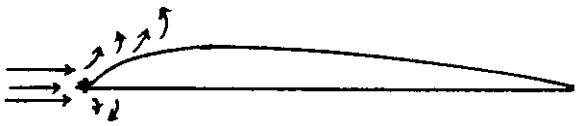

Figure 2–7. Poor Venturi Leading Edge Design (see 2.320).

The sharp edge at the leading edge acts as an obstruction to the airflow which in turn causes an objectionable burbling of the air, resulting in excessive drag of the venturi and often in a nonuniform dust pattern. It is recommended that the leading edge of the airfoil section be as smooth and well formed as that in the leading edge of the wing for optimum performance.

2.321 *Construction.* As in the case of the hopper, aluminum and steel are usually used. However, some venturies are, and can be, made from plywood. The information included in section 1.6 on corrosion protection and prevention should be considered in the design of the venturi. The following materials used for the hopper, 24ST aluminum 0.040 to 0.062 inch or 0.035 stainless steel will also be found satisfactory for the venturi. We must, however, keep in mind that if we radically deviate from the designs and sizes in common use, reinforcements and thicker materials may be necessary. Also, flight characteristics may be adversely affected.

Because of vibration, welded joints or seams do not usually hold up well. They will crack and give considerable service trouble. It has been found that riveted seams and joints have been the most satisfactory.

2.322 *Installation.* It has been found through experience that the venturi should be installed as close to the fuselage as possible for minimum drag. The forward throat opening of the venturi must, however, be so located that it will be in an unobstructed air stream. If the venturi is hung too far below the structure, high drag loads will be created. Additional bracing and heavier attachments will also be required to properly distribute the loads. The possibility of causing aircraft instability and control problems is also increased by locating the venturi too far from the fuselage.

The single compartment venturi is usually suspended at the connection to the hopper opening. On the multiple compartment type

venturies, additional fuselage to venturi attachments or supports are usually necessary. This type venturi is usually longer and wider at the trailing edge than the single compartment venturi and for satisfactory installation it should be supported near the aft end of the venturi in addition to the conventional support at the hopper discharge connection or forward end.

2.4 Spray Equipment Design

Spray equipment usually consists of the following major components: Tank, pump, spray booms, nozzles, pressure regulator, spray shutoff valve, and controls. The structural design and installation will in general be determined from the materials and equipment available. However, certain precautionary measures and good practices should be followed.

2.40 *Tank Installations.* Although the geometric design of a liquid carrying tank may be somewhat different from a dusting hopper the installation problems will in general be the same. Reference should be made to section 1.4 which describes how to attach the hopper to the primary structure. This method is also applicable to tanks since the tank loads should be distributed to the panel points. It may however be found advantageous or necessary in many cases to support the tank from the bottom, sides, or a combination of both. In any case the loads should be transmitted as directly as possible to the panel points. This may be accomplished as in section 1.6, or by the installation of a floor which will distribute the loads, or by legs on the tank tied in at the lower panel points. The tank should also be adequately supported for fore and aft loads.

Portable tanks are sometimes carried in passenger seats. This procedure is satisfactory only if adequate precautions are taken and is not recommended. A seat structure and the installation is designed for specific loads, normally not in excess of the passenger capacity. Care should, therefore, be taken not to over load the structure when carrying such tanks. Reinforcement of the seat and the installation will however permit greater loads. Proper distribution of the loads is still an important factor in these cases. The tank should also be securely tied down and vented the same as in permanent installations.

2.41 *Tank Construction.* General considerations covering tank construction and design are as follows:

2.410 *Materials.* Tanks should be constructed of aluminum alloy if lightness is particularly desirable. Other materials such as plain and galvanized sheet metal have been used successfully. The comments of section 1.6 concerning corrosion should be taken into account in the tank design.

2.411 *Drainage.* The bottom of the tank should be shaped to permit complete drainage when the airplane is on the ground or in flight.

2.412 *Provisions for Cleaning and Making Repairs.* A cover plate approximately 14 x 8 inches in the top of the tank to permit access for cleaning and making repairs is desirable. The tank filler neck and air vent may be fitted to this cover plate for optimum convenience. A fine mesh screenwire cylindrical strainer approximately 10 inches long provided in the filler neck and made removable will facilitate keeping the tank clean.

2.413 *Baffling.* Baffle plates should be provided in the tank in both directions and may be welded or riveted to the tank sides. The baffles can be of any type which will retard the movement or sloshing of the liquid. One such baffle design is given in Figure 2-8 on following page.

2.414 *Seams and Sealing.* The seams of tanks are more critical than those of hoppers from the leakage point of view, (see sec. 4.4 and 4.5 for hazards due to leakage and sec. 2.302 for a discussion of hopper seams). The general comments of section 2.302 concerning hopper seams apply directly to tank seams except for the need for paying more attention to sealing the seams. Sealing compounds or other means similar to those discussed in section 2.302 are necessary at all seams except bonded or continuously welded seams. In addition, care must be taken to seal around rivets and bolts and any other holes made in the tank. Welding, although susceptible to cracking due to vibration, is practical here by virtue of its leak resistance.

2.415 *Venting.* An important feature of any tank is an adequate vent to prevent air locks restricting the discharge flow of fluid. Above all, for safety reasons, extend the vent

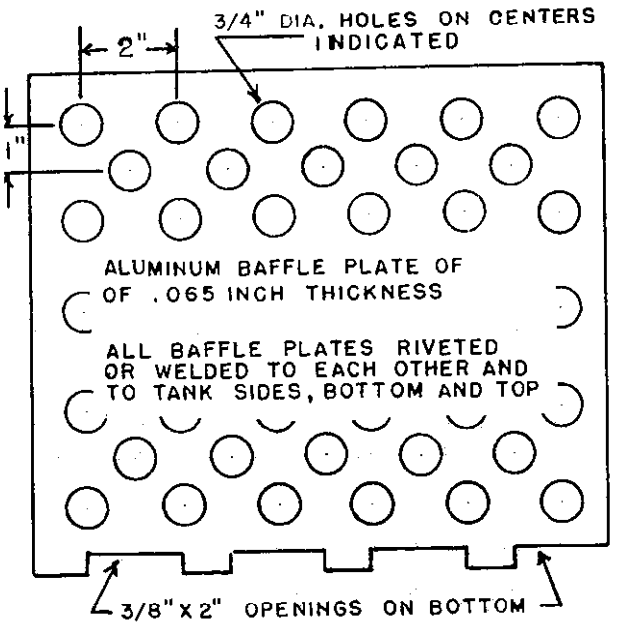

Figure 2–8. Tank Baffle (see 2.413).

to the outside of the fuselage where all fumes will be carried away from the pilot and possible ignition sources, particularly exhaust stacks. The air vent in many cases is made from 1⅛ inches outside diameter tubing fitted to the cover plate discussed in section 2.412 above. A hose is then extended from the tubing up to the upper wing in biplane design. The vent should be so installed that fumes, under all conditions, are carried away from the pilot. It cannot be too highly stressed that all connections and joints must also be made air tight to prevent leakage.

2.416 *Testing.* Pressure testing of spray tanks is not absolutely essential but is recommended for safety reasons. This testing will also determine whether the joints and connections are tight and will not leak in addition to determining any weak spots in the construction. Where spraying is done with highly volatile and flammable liquids, or where the tank has a return line, such as in an engine oil tank where the fluid is pumped back into the tank, it is recommended that the tank be tested for a pressure of 5 pounds per square inch. For other liquids, and where no fluid return line is used, testing to 3½ pounds per square inch should be satisfactory. There are many ways of pressure testing a tank, however, it is believed that the simplest and easiest method is to fill the tank with water and use a stand pipe filled with water. A 1⅛-inch pipe can be connected to the venting tube (reference sec. 2.414) or one adapted to the filler opening. In either case the height of the pipe would be the same. For a 3½-pound test the height of the water in the pipe would only need be 8 feet and only a 11½-foot height of water will be needed when making the 5-pound test.

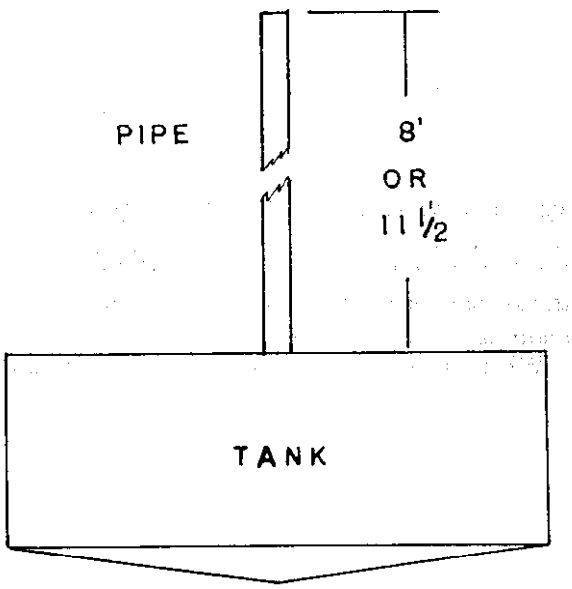

Figure 2–9. Sketch of Tank Pressure Test (see 2.416).

2.42 *Spray Booms.* Booms are essentially straight lengths of pipe or tubing and are of variable size, depending upon the system and the particular design. One-inch aluminum alloy pipe may be used if lightness is particularly desirable, however, other tubing may be used. One system we know of utilizes SAE 4130 steel 1 inch 0.049 gage tubing. The comments on corrosion contained in section 1.6 should be taken into account in designing the spray booms.

The use of round tubing to permit rotating the boom so that the position of the nozzle orifices in relation to the airstream can be varied will be found beneficial in making the installation. The boom pipes are usually located spanwise and relatively close to the lower wing of biplanes or to the wing of low-wing monoplanes. In some cases this is approximately 9 inches.

show if any reinforcements are necessary. If an analysis is not available, static testing to limit loads is also an acceptable procedure for proving the adequacy of the fuselage carry-through structure. In many instances new and greater powered engine installations have already been approved for most of the current types of aircraft. The agent will be able to advise you on how information for these approvals may be obtained.

(4) The engine mount will also have to be checked from the point of view of fitting the new engine type. If the proposed engine will fit the original engine mount, it may be used providing the engine weight and torque values do not exceed those of the original approved engine installation by the percentages given in items (1) and (2) above. Should the new mount be necessary, costly analysis may be eliminated by the following methods of construction.

Usually the engine mount on the airplane will not accommodate the proposed engine installation without some modifications even though the weight and torque differences fall within acceptable limits. In general, the old mount may be used if the geometry of the mount is not materially changed and the weight and torque limits are met. Drilling new mounting holes or adding new lugs would not be considered a material change.

If the old mount will accommodate the new engine but is not considered strong enough, then a good rule to follow is to use the old mount as a pattern and make up a new mount, using the next larger tube size, i. e., either larger diameter or greater wall thickness.

One procedure that is always satisfactory is to revise the mount in the manner considered necessary to accommodate the engine and then static test to limit load. If you don't have the necessary information to compute the loads, the CAA Engineering Representative will provide you with this data. Where extreme modifications or extensive reinforcement of the mount are necessary, it is recommended that a new mount be designed. CAA personnel will be glad to give you assistance and recommendations.

(5) A change in weight of the engines and/or the change in the c. g. location of the engines will affect the weight and balance of the airplane. This possibility should be checked by making a weight and balance calculation, if either the weight or c. g. or both have been altered. Methods of computing the weight and balance of an airplane will be found in Civil Aeronautics Manual 18.

Pilot Safety Items

4.0 General

Restricted category aircraft operations are inherently hazardous; hence pilot safety is of paramount importance. Good visibility and proper location of instruments and controls are essential. Good ventilation is necessary so that the pilot shall not be subject to toxic or poisonous chemicals or fumes. Crash protection also is of paramount importance. Accident records and service experience definitely show the importance of the aforementioned items and these will now be discussed in detail.

4.1 Visibility

Safe operation at very low altitudes and in confined areas necessitates good visibility. Service experience indicates that a large number of collisions with ground objects could be attributed to poor visibility. The view forward and down, to the side, and forward and upward should be as unobstructed as possible. Nose high conditions when taxiing and at low speeds generally result in poor visibility straight forward. Nose wheel type aircraft usually afford better forward visibility than tail wheel type aircraft when taxiing. The vertical position of the pilot's seat also affects his forward visibility—it is generally desirable to have the seat as high as possible. Visibility is also affected by the fore and aft location of the pilot. So far as visibility alone is concerned; it is desirable to locate the pilot as far forward as possible. However, this might possibly result in some sacrifice of crash protection (refer to 4.60 "Cockpit Design"). Balance, of course, must be given consideration in contemplated relocations of the pilot's cockpit.

For new designs, the following visibility limits are recommended:

An unobstructed range of pilot view in an arc of 90° above and each side of the airplane center line and 20° from the horizontal down over the nose.

These visibility limits should also be attained in old designs, if possible. Elevation of the pilot to attain better visibility can be accomplished by any of several means, to wit: New seat design, extending seat legs but using same seat, and relocation of seat attachment fittings. The seat structure should have sufficient strength to withstand the following loads anticipated in minor crash conditions:

Forward	$=6 \times 170=$	1,020 pounds.
Upward	$=2 \times 170=$	340 pounds.
Sideward	$=1.5 \times 170=$	255 pounds.
Downward	$=4.5 \times 170=$	765 pounds.

The values of 6, 2, 1.5, and 4.5 are the design load factors anticipated for a so-called minor crash in the forward, upward, sideward, and downward directions.

4.2 Location of Instruments

Necessary instruments should be so located that the pilot can see them without moving his eyes too far each side from the direction of flight. Since flying close to the ground means frequent dodging of obstacles, the pilot must pay most attention to where he is going and instruments should be located so as to demand as little eye-shifting as possible. If the pilot's position is relocated, instrument relocation also may be necessary. Effort should be made to eliminate unnecessary instruments and indicators. Obviously, the more instruments there are the longer it takes to read and identify them. It may be possible to make the instruments more easily readable by improving lighting and using contrasting paints. Plain and easily read markings showing maximum and minimum permissible operating conditions are recommended.

4.3 Safety Belts and Harnesses

Safety belts or harnesses will help to prevent serious injury to the pilot in the event of a crash by restraining him relative to the surrounding structure. A complete harness which restrains the pilot's lower body and his shoulders (and head) provides more protection than a belt alone. The belt will restrain the pilot in the seat though it may allow his upper body to pivot forward or sideward in the event of a bad

landing or crash. Safety belts and harnesses which have been approved by the Civil Aeronautics Administration have adequate strength to resist loads from relatively severe crashes. CAA approved safety belts and harnesses should be installed and should preferably be new. Used belts and harnesses should be carefully examined and if found glazed, with ragged edges or poor appearance they should be replaced with TSO belts. Attachment fittings and their carrythrough to the primary structure should be as strong as the belts or harness. Attachment fittings, preferably full swiveling, should be located on the primary structure and in direct line with the expected direction of pull on the belt or harness. For example, shoulder harness upper fittings should be directly behind the wearer's shoulders and should be as strong as the harness.

4.4 Toxic Materials, Venting of Cockpits, Etc.

Most spraying or dusting materials are toxic and service records show that many accidents can be traced to impairment of pilot's faculties because of exposure thereto. Accordingly, if the dispense materials are toxic, special precautions should be taken during flight as well as before and after the flight. In any event, the material manufacturers' instructions on handling materials should be studied with extreme care and followed carefully.

Special efforts should be made to assure proper ventilation of the cockpit. Impact or scoop-type ventilators are desirable. These ventilators should be arranged to scoop fresh, clean air into the cockpit in large volume so that the air in the cockpit continually changes. Vents should be provided so that all the cockpit is supplied with fresh air and no dead air spaces should be permitted. Often an operator will simply remove doors or windows, thus increasing air circulation. This procedure is adequate for most installations; however, it may not be satisfactory if the dispensed materials are exceptionally toxic. (Refer to subsec. 2.45.)

4.5 Protection Against Toxic Insecticides and Plant Killers

The best protection against toxic materials is to avoid their inhalation or otherwise contacting the body. Ventilation as discussed above is probably the most effective means for protection. Often the ventilation provided is not adequate, or may be adequate in the air but not on the ground. Sometimes the pilot will fly through a previous swath to completely cover a field. Consideration should be given to the various possibilities and provision made in the design to account for and eliminate as many contacts as possible. The cockpit should be readily cleanable. Tank or hopper inlets and outlets should be located so as to minimize the possibility of toxic materials getting into the cockpit as a result of spilling, leakage, etc. Special goggles, clothing, gloves, etc., may be necessary for the pilot's protection. The material manufacturers' instructions here again must be followed with extreme care to provide the most protection. The United States Department of Agriculture requires labels on the containers to state the contents and toxicity of insecticides. These labels should be read carefully.

4.6 Crash Protection

Service records of both agricultural and personal-type aircraft show that relatively minor crashes often result in serious or fatal injuries due to inadequate crash protection. Installation of extra-strong safety belts and/or safety harness alone is not sufficient. Typical special precautions that may be advisable are as follows.

4.60 *Cockpit Design.* The cockpit should be the "strong point" of the structure. The forward portion of the fuselage, wing panels and tail should have decreasing structural strength away from the cockpit. Cockpit tubing or other structure should be arranged to buckle outwardly instead of inwardly. Special consideration should be given to the design of all structure within range of the head, and instruments, sharp objects, etc., should be moved beyond range of the head. Sharp edges should be avoided and rubber padding should be used where necessary. It should be noted that parts and structure can be crushed in upon the pilot as well as pilot striking parts and structure due to his motion during a crash. Rudder pedals should be strong enough to support the feet and the control column should be strong enough to resist buckling under heavy forward or side loads. Seats should be firmly

anchored to longitudinal members of the primary structure. Floor structure should afford maximum protection for the feet.

4.61 *Overall Design.* A strong keel or skid or similar additional structure under the fuselage permits the craft to slide instead of plowing into the ground in low-angle accidents; otherwise the bottom portions of the fuselage may gouge into the ground, causing extremely abrupt decelerations. To prevent the engine from driving into the cockpit, a heavy firewall may be advisable. Fuel tanks should preferably be placed in the wing. A strong turnover structure should be provided. Landing gear should be designed to fail prior to failure of structure to which it is attached and the landing gear travel should be as large as possible for maximum energy absorption during hard landings. If possible, concentrated items such as hoppers, batteries, generators, and pumps should be located so that they will not strike the pilot if they break loose. Also, their supports should be able to stand loads to be expected in minor crashes.

If the weight of an object is "X" then the loads that may be expected on the object in a minor crash are:

Forward 6 times X.
Sideward 1.5 times X.
Downward 4.5 times X.
Upward 2.0 times X.

(The values of 6, 1.5, 4.5 and 2.0 are the design load factors anticipated in a so-called minor crash in the forward, sideward, downward, and upward directions, respectively.)

For example, calculation of loads likely to act on a battery in a minor crash is as follows:

Battery weight=20 pounds.
Forward load=$20\times6=120$ pounds.
Sideward load=$20\times1.5=30$ pounds.
Downward load=$20\times4.5=90$ pounds.
Upward load=$20\times2.0=40$ pounds.

Electrical Systems

5.0 Scope

The material in this section is intended for restricted category aircraft operators who may have occasion to modify the electrical system in their aircraft. Recommended practice in electrical design, installation, and maintenance is presented in broad outline form, based on service experience with many types of civil aircraft. For additional information and/or recommendations concerning doubtful aspects of particular electrical installations, it is suggested that the operator contact the CAA Aviation Safety Agent, Engineering Representative, or the Aircraft Engineering Branch of the CAA regional office in his area.

5.1 Electrical System Considerations

5.10 *General.* Due to the flammable nature of many materials used in agricultural dusting and spraying operations, special caution is required in the design, alteration and maintenance of electrical systems so that electrical ignition of fires is prevented. If improperly designed or installed, any part of the electrical system, even though it performs a nonessential function, may start a fire which would endanger the entire airplane. Further, malfunctioning of this part might so affect the electrical system that essential functions cannot be performed. Consequently electrical equipment which is not essential to the intended operation should be disconnected as close to the power source as possible.

5.11 *Addition of New Circuits and Equipment.*

5.110 *Power System Capacity.* Before adding appreciable loads to the electric power system, it should be ascertained that the power handling capacity is still adequate. Unrestricted loading of the original aircraft power sources might lead to electrical system failure under certain operating conditions, which would be hazardous when safety in flight requires that electrical power be available for some essential equipment. For generator battery systems, the generator continuous rating should exceed the total continuous load by at least 25 percent, which is usually sufficient to keep the battery charged. Intermittent loads such as landing lights are not considered as part of the continuous load.

5.111 *Control Through the Master Switch.* New circuits added to the electrical system should be connected to the power source in such manner that the master switch will be capable of interrupting these circuits in the event of an electrical fault of undetermined origin during flight. (Refer to subsection 5.12.)

5.112 *Protection for New Circuits.* Either a fuse or a circuit breaker should be installed in the positive (+) side of all electrical circuits. They should be accessible during flight for replacement or resetting. Circuit breakers should be of the trip-free (nonoverride) type and should be as close to the power source as practical. They should be selected so that they trip the circuit before the wire begins to smoke, in case of an overload or short circuit. Circuits essential to safety in flight should be provided with individual protection. This will avoid loss of essential functions due to failure of nonessential circuits.

5.113 *Switches.* When separate control switches are installed, due consideration should be given to the type of load involved. For instance, in the case of lamp loads, the filaments, at the instant of the closing of the switch, will take an inrush current of 10 or more times the steady current. The switch used for this application should be rated adequately to prevent contact welding upon closure. Inductive loads, such as solenoids and relays, will cause arcing at the switch contacts when the switch is opened. Proper choice of switches for inductive loads will minimize pitting of the contacts, and thereby reduce the possibility of failure.

5.12 *Master Switch.* A master switch should be provided which can disconnect all sources of electrical power in one operation. Thus, the source for a suspected electrical fire can be dis-

connected quickly in an emergency. The switch should be located as close to the power sources as is practicable, for maximum effectiveness, and should be easily accessible in flight.

5.13 *Preventive Maintenance.*

(a) Frequent inspection of the electrical system, and replacement or repair when deficiencies are found, will go a long way toward the elimination of fire hazards in airplanes. A suggested list of items to look for during these inspections is given below:

(1) Damaged or overheated equipment and wiring, or worn wiring insulation.

(2) Poor electrical bonding.

(3) Cleanliness of equipment and connections.

(4) Proper support of wiring and satisfactory attachment to structure.

(5) Tightness of connections and terminals.

(6) Continuity of fuses and circuit breakers.

(7) Clearance or insulation of exposed terminals.

5.2 Electrical Power Source Considerations

5.20 *General.* It should be determined that the sources of electrical power have sufficient capacity to supply the electrical loads of the aircraft for the most unfavorable conditions of operation. The highest level of safety is provided by a generator-storage battery combination operated in parallel, since two alternate sources of power are thereby available. The use of dry cell batteries to furnish power for essential equipment, such as position lights, is not recommended, since no simple reliable method exists for determining the condition of dry cell batteries before flight.

5.21 *Storage Batteries.*

(a) Storage batteries should be installed in such manner that—

(1) They are rigidly attached to the structure by means of brackets and fittings of adequate strength.

(2) Ready ground inspection and servicing is possible.

(3) They are enclosed in a container or compartment to prevent corrosive substances within the battery from coming in contact with aircraft structure.

(4) A vent is provided in the upper part of the battery container or compartment, and a vent tube installed leading from the vent to a negative pressure area outside the airplane. If no charging generator is installed, the vent need not be provided.

5.22 *Generators.*

5.220 *Wind-Driven Generators.* Serious accidents have resulted from propeller blades failing during flight and damaging adjacent structure. Therefore, wind-driven generators should be located so that the extended propeller disk does not intersect pilot or passenger positions, unless suitable mechanical protection is provided.

It is advisable to install a fuse or circuit breaker in the main generator circuit to prevent rapid battery discharge in case of generator control failure. The fuse or circuit breaker should be rated high enough to prevent nuisance tripping at normal loads.

5.221 *Engine-Driven Generators.* It should be ascertained that the generator to be used is suitable for installation on the particular engine in the aircrft. The generator overhang moment and power demand should not exceed those for which the engine had been designed, and the voltage regulation equipment should be capable of satisfactory operation over the speed range of the engine. Information on these points can be obtained from the engine manufacturer or the local CAA office.

Special care is required in the installation of generator cables at the generator terminal block. Insulation wear brought on by vibration may cause short circuits which could bypass voltage control equipment and result in dangerous overvoltage. Heavy insulating tubing and insulated barriers should be used on all generator wiring to avoid this possibility.

5.222 *Generator Control Equipment.*

(a) Generator controls are provided to perform all or part of the following functions:

(1) Maintain essentially constant voltage, for operational drive speeds and generator loads.

(2) Disconnect generator from the battery when current flows in the reverse direction, such as occurs when the engine is cut in the case of an engine-driven generator.

(3) Limit the generator output to a safe value.

This equipment is sometimes mounted within the end-bell of wind-driven generators. In the case of engine-driven generators, the controls are installed as a separate unit or units.

Failure of one or more of these control elements can be extremely hazardous, and every effort should be made to obtain a safe installation. Locations which are well ventilated and have low vibration amplitudes (such as rigid structural members) should be used for mounting generator control equipment.

5.3 Electrical Equipment Considerations

5.30 *General.* In selecting aircraft electrical equipment, careful consideration should be given to the environmental conditions under which the equipment must function satisfactorily. Many of these conditions, as listed in section 5.31, are peculiar to aircraft. Vibration in aircraft has contributed to countless electrical equipment failures. It should be determined that the equipment will not initiate a fire or explosion under normal or fault conditions.

5.31 *Environmental Conditions for Aircraft Electrical Equipment.*

(a) The following ranges of flight environmental conditions have been established for small aircraft:

(1) Temperature	20° to +120° F.
(2) Altitude	0 to 15,000 feet.
(3) Humidity	Up to and including 95 percent at 90° F.
(4) Acceleration (shock).	Fuselage and engines 6.6 g. (max.). Wing and tail tips 24.0 g. (max.)
(5) Vibration	5 to 55 cycles per second with a double amplitude of 1/16 inch.

5.32 *Electricable Cable.* Electrical cable meeting the performance requirements of specification AN–J–C–48 (copper) and AN–C–151 (aluminum) is satisfactory.

5.320 *Criteria for Selection of Cable.*

(a) The selected cable should not carry continuously or intermittently current in excess of the ampere values indicated by curves 1, 2, and 3 of Fig. 11–1, "Electrical Cable Chart" in CAM 18.

(b) The voltage drop in the main power cables from the generators or the battery to the bus should not exceed 2 percent (2.0 percent) of the regulated voltage, when the generator is carrying rated current and the battery is being discharged at the 5-minute rate.

(c) The voltage drop in the load circuits between the bus and the electrical equipment should not exceed the values shown in the following tabulation:

Nominal system voltage	Allowable voltage drop	
	Continuous operation	Intermittent operation
14	0.5	1
28	1	2

5.33 *Electrical Terminals.* Satisfactory terminal attachment is of primary importance and should be accomplished by the use of proper tools careful insertion of the stripped cable in the terminal. In general, the solderless type of swaged or staked terminals should be used, with insulating tubing placed over the metal barrel.

5.34 *Lights.*

5.340 *Position Lights.* When installed, position lights should conform to the standard configuration as herein described. When the airplane is in the normal flying position a forward red position light is displayed on the left wing and the forward green position light on the right wing; each showing unbroken light between two vertical planes whose dihedral angle is 110° when measured to the left and right, respectively, of the airplane from dead ahead. Such forward position lights should be spaced laterally as far apart as practicable. One rear position light should be installed on the airplane at the rear and as far aft as possible, and should show a white light visible aft throughout a dihedral angle of 140° bisected by a vertical plane through the longitudinal axis of the airplane.

5.341 *Landing Lights.* Landing lights, when installed, should be so installed that no visible portion of the swept disk of any propeller on the airplane is illuminated thereby. The lights should be so aimed that a minimum amount of glare is visible in the first pilot's seat.

5.342 *Instrument Lights.* Instrument lights should be installed in a manner to preclude

direct rays or reflections from interfering with the pilot's vision.

5.35 *Switches, Rheostats and Other Controls.* If switches, rheostats, circuit breakers, etc., are installed, they should be located so as to be easily visible and within convenient reach of the pilot or other member of the crew. They should be plainly marked to indicate their function.

5.4 Electrical Installation Considerations

5.40 *General.* It is emphasized that the best defense against the fire hazards of electrical arcing faults is an installation so protected mechanically that a fault cannot occur. Circuit breakers and fuses, although they will finally clear the faulted circuit, will not necessarily prevent the generation of dangerous sparks.

Special care should be exercised in the electrical system installation to prevent short circuits due to vibration, insulation abrasion, improper clearances, detrimental fluids, adverse environmental conditions, etc.

5.41 *Cable Runs.* Care should be exercised to provide adequate mechanical support for the cable to prevent relative motion between the cable and the structure. Cables should be supported to prevent excessive droop between point of support.

5.42 *Bonding.* If metal parts of the aircraft structure are isolated from each other by insulating materials, they may accumulate unequal static charges of electricity. Spark discharges are then possible from one metallic member to another which can ignite flammable fluids or dusts.

This hazard can be eliminated by bonding (electrically connecting) all metal parts of the airplane which are normally unconnected to the structure or which do not make good connection with the structure. Fabricated flexible jumpers, with terminal lugs at both ends, are available for this purpose. Good electrical contact is important, so that all contact surfaces should be clean and tight. Lockwashers should be provided to prevent loosening of connections due to vibration.

5.43 *Terminal Connections.* Loose and dirty electrical connections increase the resistance at the faulty contact surfaces. When comparatively high current flows through such connections, local heating and arcing may result. All connections should be cleaned and carefully tightened upon installation, and then examined periodically for signs of loosening, dirt or corrosion. A particularly susceptible connection is the battery ground connection to the metallic structure.

5.44 *Drainage of Water.* The accumulation of water within electrical equipment due to condensation will accelerate the progress of corrosion, leading to hazardous faults or malfunctioning. Therefore, adequate means of drainage should be provided, such as drain holes, drip loops, gaskets, etc., in all junction boxes, equipment, and cable bundles.

5.45 *Combustible Fluids, Vapor, and Dusts.* A very important safety consideration is to design the installation so as to minimize, by sufficient separation, baffles, etc., the possibility of combustible fluids, vapors or dusts contacting electrical units. The installation of each unit carrying or containing combustibles should be examined to determine that, when it is in normal condition or when damaged, the fluid or vapor it contains will not come in contact with electrical equipment.

Equipment which is subject to sparking during operation, such as relays and motors, should not be located in zones where a combustible atmosphere is likely to exist.

Fire Prevention

6.0 General

Despite most careful precautions taken by operators of crop dusting or spraying airplane, fires continue to occur. In the majority of cases, these fires are the result of accidents in which the aircraft is damaged and subsequently catches fire. However, fires still occur in the air and on the ground. Certain precautionary measures which may be taken to reduce these hazards are given in the following sections.

6.1 Sulfur Dust Fires

Sulfur dust as used in sulfur dusting is very combustible. Sulfur itself has a very low ignition point and is highly combustible when atomized with air which occurs during dusting operations. Also, due to its excellent dielectric properties, sulfur picks up electric charges readily, which, under atmospheric conditions of low relative humidity, may result in combustion. There are actual cases of sulfur igniting when thrown from a workman's shovel due to static electricity. Although such occurrences are rare, they serve as examples of how easily sulfur can be ignited. In the industrial handling of sulfur (pulverizing, grinding, etc.) every effort is made to prevent the formation of a cloud of sulfur dust because of the danger of explosion. In airplane dusting operations, however, reverse conditions exist since, generally speaking, the objective is to form a cloud of sulfur in order to distribute the insecticide widely. Obviously, the problem of fire prevention in sulfur dusting operations is more complicated than in industry.

6.10 *Miscellaneous.*

(a) The importance of using extreme care in sulfur dusting operations cannot be overemphasized. Typical causes of sulfur fires and representative precautions are as follows:

(1) Dusting with a dirty airplane coated with oil and sulfur dust is inviting trouble. Aircraft used for spreading sulfur should be kept as clean as possible at all times.

(2) The engine exhaust system should be maintained free from leaks and the best grades of lubricating oil should be used in order to decrease carbon formation.

(3) Care should be exercised while loading the hopper in order to prevent foreign matter such as wire, paper, etc., from getting in the hopper. Such foreign matter may cause a spark or clog the agitator shaft and cause it to overheat, thus starting a fire.

(4) Smoking in the vicinity of sulfur dust should never be permitted.

(5) Fires which occur while dusting with sulfur usually occur during conditions of low relative humidity. Relative humidity is usually lowest during the late morning and early afternoon. Therefore, as a further precaution against sulfur dust fires, dusting should be done only in the early morning or late evening, preferably during the early morning.

(6) The throttle should not be opened suddenly except in case of emergency. A sudden blast of exhaust frequently throws sparks from the exhaust into the dust swath.

Due to the fact that the pullup at the end of the field directs the exhaust downward toward the dust swath, it is also suggested that the hopper gate be closed prior to effecting the pullup at the end of the field to minimize the possibility of fire. This may reduce the efficiency of the dusting operations slightly, however, the pilot can always make a trip across the ends to spread dust on the parts of the field missed by closing the gate early.

(7) Compartments where dust might collect should be ventilated and be free of ignition sources such as electrical circuits unless special provisions are made to prevent sparks from short circuits or other sources such as unsealed circuit breakers.

(8) The hazards of dusting with sulfur must not be minimized because of previous favorable experience. Remember, it takes only one act of carelessness or inattention to cause a disastrous fire.

6.11 *Sparks From the Engine Exhaust.* Fires due to hot carbon sparks from the engine exhaust can, of course, be prevented by keeping

the exhaust discharge and sulfur dust apart. The engine exhaust system should be so arranged that it will not discharge exhaust gases under or along the bottom of the airplane. Sulfur will ignite at a temperature of approximately 500° F., depending upon its form. The temperature of the exhaust gases from an aircraft engine is, in general, about 1500° F. when discharged from the cylinder. Although the gases will cool considerably in the exhaust manifold and will cool further upon coming in contact with the outside air, potential fire hazards still exist. It is therefore desirable to place the exhaust outlet as far away from the path of the sulfur discharge as possible. The exhaust discharge should, in addition, be so directed that it will not be blown into the dust swath when a pullup is effected. The most satisfactory location for the exhaust is above the top wing of the airplane with the outlet directed outward and upward.

6.12 *Static Electricity.* All aircraft engaged in spreading sulfur dust should be completely bonded by connecting all metal parts with electrical cable and also should be provided with sharp pointed static discharge rods on each wing tip in order to provide the maximum of protection against a spark discharge. Complete bonding (refer to subsec. 5.42) of an airplane will prevent differences in electrical potential between various metal parts and will thereby prevent sparks from occurring between these parts. For this reason, even though it is sometimes not possible or practicable to completely bond all parts of the wings and tail surfaces, at least the fuselage aft and in the vicinity of the hopper, the struts and fittings adjacent to the hopper and the hopper itself should be bonded.

6.13 *Pressure Between the Hopper Gates and Their Guide Channels.* Fires often occur at the end of a swath when the gate is slammed shut to cut off the flow of sulfur. The pressure exerted by the gate on sulfur dust which has collected in the guide channels may cause sufficient friction to ignite the dust.

To avoid this, the hopper gate should be well fitted to its guide channels in such a manner that it will not bind and that accumulation of sulfur dust in the channels will be minimized. Further, both ends of the guide channels should be open in order that such dust as accumulates there can be swept out when the gate is actuated. It may be desirable to provide small felt pads on the end of the gate to keep the dust brushed out of the channels. The use of ferrous metals for hopper gates must be avoided due to the possibility of striking a spark when the gate is actuated. An aluminum alloy gate is preferred over other nonferrous materials due to its excellent heat conducting properties, which tend to prevent heat generated at a given point from remaining localized. Wood is an unsatisfactory material from the standpoint of heat conductivity. Heat generated by friction between a wood gate and its guide channels will tend to remain localized, and may reach values sufficiently high to ignite sulfur dust.

6.14 *Poorly Designed or Improperly Fitted Agitator Shafts.* Agitator shaft bearings are frequently not lubricated properly and are not sealed against the entry of sulfur dust. On some installations the hopper sags when loaded and causes the shaft to bind in its bearings. A shaft operating under these conditions will frequently overheat, and may readily reach temperatures sufficiently high to ignite the sulfur that has collected in and around the bearings.

Agitator shaft bearings should be sealed against the entry of sulfur dust and provided with sealed type bearings or else made accessible for lubrication. The installation should be so designed that sagging of the hopper will not cause the bearings to bind.

There should be sufficient clearance between the agitator blades and the sides of the hopper to preclude the possibility of the blades striking the hopper. However, the clearance should not be excessive; otherwise dust may pack up on the sidewalls of the hopper, thereby resulting in friction hazards.

6.15 *Sparks Caused by the Tail Skid While Taxiing.* Sparks caused from the tail skid striking stones or other objects on the ground probably cannot be avoided. However, the fire hazard can be reduced by keeping the airplane fuselage, interior, and exterior, tail surfaces, etc., free from sulfur dust.

6.16 *Inadequate Ventilation.* It is the experience of numerous operators that improperly designed ventilating systems defeat the purpose

for which they are intended, in that entrance of dust (instead of clean air) is facilitated. Obviously, a poor ventilating system is worse than none at all. A properly designed ventilating system requires adequate and properly located ducts. If closed spaces cannot be properly ventilated, it might be advisable to close them off entirely. Access openings should be provided for inspection and removal of dust. Detachable covering also may be practicable for this purpose.

The design and position of the venturi is important in connection with keeping the airplane free from dust. The venturi should be designed and positioned on the airplane so that the flow of dust will be directed downward and clear of the airplane. A venturi embodying a flat upper surface and a cambered lower surface with a progressively increasing droop at the trailing edge may prove helpful.

6.17 *Fuselage and Tail Surface Covering.* In order to prevent, or at least delay burning of the aircraft if the discharged sulfur dust should ignite, the entire lower portion of the fuselage aft of the hopper should be covered with thin gage metal or plywood. If it is impractical to cover this area completely, at least the lower surface of the fuselage in the vicinity and 3 feet aft of the hopper opening should be so covered. The remaining areas of the fuselage and tail surfaces should be finished with acetate dope.

The aforementioned methods of covering the fuselage will not prevent the sulfur dust from catching fire. However, in the event that all other precautions have failed and the sulfur and thence the aircraft does catch fire, the pilot will be accorded additional valuable time in which to effect a landing.

6.2 Combustible Liquid Spraying

The aforementioned considerations concerning sulfur dusting fires, in general, are also considered applicable to combustible liquid insecticides. The material pertaining to carelessness, sparks from engine exhaust, static electricity, ventilation, and fuselage and tail covering is considered particularly pertinent. Other items considered applicable to combustible liquid insecticides are as follows:

6.20 *Lines Containing Flammable Fluids.* All lines carrying flammable fluids should be of material having a resistance to fire equivalent to that of aluminum alloys. Hose and clamp type connections should not be used in lines which are under pressure. Where a line operates under pressure a connection having fire resistance equivalent to the remainder of the line should be used.

6.21 *Compartments Containing Flammable Liquids.* Compartments containing flammable liquid containers or lines which carry flammable liquids should be ventilated and drained with care so that a combustible mixture is not likely to accumulate. All parts of the compartment should be bonded electrically to prevent the possibility of sparks igniting any combustible liquid or mixture that might accumulate. In addition, these compartments should be free of ignition sources such as electrical circuits and junction boxes whenever possible.

6.22 *Fluid Shutoff Provisions.* Valves or other means of shutting off the flow of combustible liquids in the event of a fire should be provided. These valves should be located as near the tank as practicable.

397956 O - 56 - 5

Weight and Balance

7.0 General

As pointed out in subsection 1.0, weight is an important factor in aircraft design. Normally, an airplane is designed for certain operations in flight and landings at all gross weights up to its maximum approved value. For example, if an airplane has a maximum approved weight of 2,000 pounds, then that airplane can be operated safely at all weights up to its maximum approved value of 2,000 pounds. If the 2,000 pounds value were exceeded, then its strength limits would probably be encroached upon and its rate of climb, takeoff distance, landing distance, and other performance would probably be adversely affected. Accordingly, the operator should maintain close weight control to avoid exceeding maximum weights where practicable. Furthermore, accurate balance records should be maintained for each item of weight removed or added to the aircraft and pertinent balance computations should show that the center of gravity stays within the approved center of gravity range. In the event that contemplated changes in loading distribution cannot be made without exceeding approved limits, the contemplated change in loading should be revised accordingly, or else flight tests should be made to make sure there will be no unsafe condition.

7.1 General Effects of Gross Weight Changes

When an airplane is designed under the airworthiness standards of the Civil Air Regulations or of the military services, the aircraft structure is designed for a specific maximum maneuvering load factor at a specific maximum gross weight. The weight selected by the designer is generally the maximum weight consistent with high overall performance and consistent with the purpose for which the airplane is to be used. The load factor used in the design, on the other hand, is based on experience and represents the upper limit expected in the normal operation of the particular airplane in the course of performing the tasks for which it was designed.

When the design load factor—design gross weight relationship is modified and the gross weight is increased above its design value, an operator must consider the effects resulting from such a modification if he is to maintain a safe operation. Excessive overloading is to be strongly discouraged and it is recommended that overload gross weights used for a particular airplane be chosen so as to permit safe operation under all normal and emergency conditions. Some of the effects of gross weight changes on the strength of the aircraft structure and on possible maneuvers are discussed below. A chart showing gross weight increases that may be used with caution versus the original airplane design maneuvering load factor is presented in Figure 7–1. This chart will be useful as a guide to possible maximum percentage weight increase particularly from a wing strength point of view when the airplane design limit maneuvering load factor is known. For example, an airplane designed originally for a limit load factor of 4.4 (this corresponds to the minimum load factor for a CAR 3 utility category airplane) could be overloaded as much as 31 percent of its normal gross weight with reasonable safety provided the airplane is flown in a restricted manner and all severe maneuvers are avoided. If the load factor data for any particular airplane are not available, such information can be readily secured from the airplane manufacturer or may be obtained in some cases from your CAA Aviation Safety Agent.

7.10 *Effects of Gross Weight Changes on Aircraft Structure.* The landing gear and its supporting structure are particularly critical if landings are to be made at gross weights in excess of the design weight. Particular caution should be exercised in making landings with the airplane overloaded in order to keep the vertical descent velocity or sinking speed as low as possible so as to keep within the original design limits. Since the load factor developed in landing is a function of the descent velocity and the landing weight, the pilot can keep the load factor developed within reasonable limits by control-

should be noted here that this chart does not reflect the effects of airplane speed or radius of turn.

To prevent the possibility of encountering gust loads in excess of the design loads, the level flight speed and the never-exceed speed should be reduced when the airplane is loaded above its normal gross weight. If these speeds are reduced by the ratio W (specification gross weight) /W (new gross weight), no difficulty should be experienced from this source. In no event, however, need these speeds be reduced below the design maneuvering speed, V_ρ. For some particular airplanes the above ratio may be unduly conservative and deviations from the recommended practice may be necessary. The main point to remember here is that due to the reduced load factor associated with overload condition, caution must be exercised in all flights at the higher speeds and that some reduction of the design speeds is necessary for safe operation.

Pull-ups at speeds in excess of the design maneuvering speed should be conducted with extreme caution so as not to exceed the reduced overload load factor. Severe pull-ups should be made only when the maneuvering speed, V_ρ, is less than the value given by the following expression:

$$V_\rho = 17 \sqrt{\frac{nW}{S}}$$

where n and W are the load factor and gross weight respectively corresponding to the original design condition and S is the wing area. If severe pull-ups are only made at speeds less than this value, the airplane will stall before reaching the reduced overload load factor. This speed may also be used as a measure of the speed beyond which full displacement of the control surfaces should be avoided so that they will not be overloaded.

7.2 Weight and Balance Computations

Civil Aeronautics Manual 18, "Maintenance, Repair, and Alteration of Certificated Aircraft, Engines, Propellers, and Instruments," discusses weight and balance control and computations in detail. CAM 18 contains complete weighing procedures, methods of computing weights and balance, and means of establishing loading schedules. Definitions of the various terms used in weight and balance problems are defined. Means of computing center of gravity locations and weights of the airplane including all of its parts and equipment are also included. Section 2.315 of this guide discusses in detail means of determining the center of gravity of hoppers and tanks.

7.3 Effect of c. g. Position on Structural Strength

In general, if the center of gravity of the loaded airplane lies within the approved c. g. range as given in the CAA specification for the airplane, then the structural strength of the aircraft will be affected only by the airplane weight. If, however, the c. g. limits are exceeded then the structural strength may be adversely affected. Certain examples relative to landing gear loads are as follows:

7.30 *Effect of c. g. Position on Nose Wheel and Forward Fuselage Loadings.* The nose wheel loads are increased as the c. g. is moved forward. In some instances, relatively small movements of the center of gravity mean large changes in nose wheel load; therefore, any movement of the center of gravity forward of the forward limit given on the airplane specification may require structural investigation of the effects of change in nose wheel loading. Operation of agricultural aircraft from rough terrain aggravates this situation. Structural investigation of both the nose wheel gear and the forward portion of the fuselage should be made if the forward position of the c. g. appreciably exceeds the specification limit.

7.31 *Effect of c. g. Position on Tail Wheel Strength.* The considerations for the nose wheel covered in 7.30 are also considered applicable to the tail wheel.

7.32 *Effect of c. g. Position on Main Wheel Loads.* Design loads on the main wheels are independent of c. g. position; therefore any effects here are limited to those from weight increases only.

Powerplant Installation

8.0 Scope

The powerplant installation includes primarily that portion of the aircraft which furnishes the motive power. This includes, among other items, the engine, engine cowling, firewall, propeller, fuel system, oil system, cooling system, and exhaust system; the related accessories, controls and instruments; and the attachment of these items to the structure of the aircraft. The installation usually consists of all parts forward of the firewall as well as the supply and control systems to the rear of the firewall. For instance, fuel tanks and straps supporting the tanks as well as cockpit controls for operating the engine are included.

Airworthiness Evaluation.—To evaluate the airworthiness of a powerplant installation in an aircraft, consideration should be given to the design and construction details, the operating characteristics, and features incorporated to permit maintaining the continued airworthiness of the installation. The objective is to achieve satisfactory powerplant operation under the atmospheric conditions, altitudes, and maneuvers to be encountered in ground and flight operation.

8.1 *Engines*

Engines should be a type that has been certificated by the Civil Aeronautics Administration. Civil Aeronautics Administration engine specifications, which are available to the public specify the power, speed and other limitations which apply to each engine model. The engine should be mounted in such a manner that it will operate properly under all normal conditions and so that excessive vibration is not transmitted through the mounting to the airplane structure. Most engines have provisions for the use of vibration isolating rubber bushings.

8.2 Propellers

Propellers used in civil aircraft should be types that have been certificated by the Civil Aeronautics Administration. The propeller specifications issued by the Civil Aeronautics Administration list the propeller ratings in terms of horsepower and revolutions per minute. They also list, in a few instances, the maximum cylinder bore of the engine on which the propeller is eligible for use. The engine ratings and bore must not exceed the values for which the propeller is approved. Specifications for constant-speed propellers and most controllable propellers also list approved accessories such as governors, etc.

Although a propeller may be satisfactory for use insofar as the propeller and engine ratings and bore are concerned, the airplane performance, weight and balance, and the propeller clearances must also be considered. In the case of propellers with metal blades, the vibration characteristics of the engine-propeller combination are also of primary importance.

8.20 *Propeller Vibration.* To determine that the vibration characteristics of the propeller are satisfactory in any given installation, the blade-vibration stress must be measured during operation. Past experience has indicated that this procedure is necessary with all propellers except wood types. In some cases it is possible to determine the effect of changes, or slightly new combinations, by ground tests or comparisons with previous data, but in most cases flight tests for this purpose are necessary. The propeller manufacturers have the stress-measuring equipment necessary to accomplish these tests. Fatigue due to vibration is the most frequent cause of propeller failures. Vibration impulses can be caused by various irregularities of airflow, but these are usually important only for very large diameter propellers of approximately 13 feet and over. Engine power impulses, however, are the main cause of propeller vibration. Vibration, if continued at the natural frequency of the propeller, may cause propeller failure after a few hours. Metal propellers must therefore never be used without ascertaining from the Civil Aeronautics Administration whether the vibration characteristics of the engine-propeller combination

are approved. Each engine has a critical range of operation for each type of propeller with which it is combined. If this range is in the normal, engine-operating range, a placard is required to caution the pilot against operating in the dangerous range and the tachometer should be marked with a red arc in this range.

8.21 *Propeller Pitch and Speed Limitations.* In the case of fixed-pitch and ground-adjustable-pitch propellers, the following information is determined at the time the airplane is type certificated, and is included in the airplane specification:

Static r. p. m.'s at maximum-permissible-throttle setting,
(Not less than ..... r. p. m.)
(Not more than ..... r. p. m.)
Propeller diameter,
(Not less than ..... inches.)
(Not more than ..... inches.)

These data serve to insure compliance with minimum performance requirements, particularly takeoff and first minute climb and will also assure against the possibility of overspeeding during takeoff or in a power-off dive. Normally, propellers made of wood will require a different range of static r. p. m.'s limits than metal propellers.

8.22 *Propeller Replacements.* Generally, fixed-pitch or ground-adjustable-pitch propellers which fall within these limits should provide satisfactory performance. In replacing propellers or altering the pitch so that the static r. p. m.'s and diameter limits are no longer complied with, the airplane should be put through the following simple flight tests to assure that safety has not been sacrificed:

(a) Takeoff with full throttle or the maximum-allowable-manifold pressure, and climb at the best-rate-of-climb speed. (The best-rate-of-climb speed for some airplanes is given in Table 9 1.) If the best-rate-of-climb speed is not known, it may be estimated as a speed one-third of the way between the power-off stalling speed and the maximum level-flight speed. The engine r. p. m. should not exceed the rated r. p. m. during this test.

(b) With the throttle closed dive the airplane at 110 percent of the maximum level-flight speed. The engine r. p. m. should not exceed 110 percent of the maximum continuous rated engine speed in this test.

(c) Climb the airplane at full throttle or the maximum allowable manifold pressure at maximum gross weight and at the speed mentioned in item (a) above. Typical rates of climb which should be obtainable for various types of airplanes are shown in Table 9–1.

Likewise, in the case of controllable and constant-speed propellers, the aircraft specification will list the propeller diameter and the settings at which the blade stops should be set in order to assure conformance with minimum performance requirements. The diameter and stop limits are given for each specific controllable and constant-speed propeller which has been approved for use on the airplane. If these settings are changed, the suitability of the new settings should be checked in the same manner as described above for fixed-pitch propellers. On course, in selecting propellers, careful consideration should be given to the provision of adequate clearance between the propeller and the ground and between the propeller and airplane structure.

8.23 *Propeller Clearances.* For land planes with tail wheel type landing gear, the minimum satisfactory clearance between the propeller and ground is generally considered to be 9 inches with the airplane in a horizontal position and the landing gear deflected under the most forward center of gravity position with the maximum gross weight of the airplane for takeoff. In addition to this, consideration should be given to how much this clearance will be decreased with smaller angular displacements of the engine nose below the horizontal position together with the smoothness and surface conditions of the runways from which operation is anticipated.

The minimum clearance between the propeller and the engine, engine cowling, and other parts of the airplane is dependent upon the relative movement present and the effect it produces upon the vibration characteristics of the propeller. With the most adverse relative movement of the parts, the propeller should clear the engine parts and cowling by at least ¼ inch, and other portions of the airplane by at least 1 inch.

8.3 Fuel and Oil Systems

8.30 *Fuel System.* An aircraft fuel system must provide for the storage of the required amount of fuel within the aircraft structure, and for the delivery of the fuel to the carburetor at the proper rate and pressure. The system must be reliable under all conditions of flight and, insofar as possible, simple in operation.

8.300 *Fuel-System Hazards.* The greatest care should be exercised to maintain the fuel system in a condition that will eliminate hazards arising from fire and engine failure. The following are some of the more common fuel-system factors which may cause fires and engine failures:

(a) Fires due to leakage, fumes, insufficient ventilation and drainage, carburetor flooding, overpriming, backfires, improper tank ventilation, or proximity to hot spots such as exhaust manifold, exhaust discharge, electric sparks or arcing.

(b) Engine failures due to water, dirt, or foreign matter in the system, vapor lock, air lock, insufficient fuel pressure, improper functioning of fuel-system controls, or inaccurate fuel gage readings.

8.301 *Fuel-System Arrangement.* Experience has indicated that the most reliable type of fuel system is one incorporating provision for feeding each engine from only one tank at a time, regardless of whether a gravity system or a fuel-pump system is employed. It is, of course, necessary that adequate precaution be taken to insure that the outlets of fuel tanks are not uncovered in maneuvers. When two tanks are used at the same time with a pressure fuel system, it has been found difficult to assure that fuel will feed evenly from each tank and hence the tank which is exhausted first may air lock the system. Again, when two tanks are used at the same time with a gravity system, without interconnecting their vents, a difference in pressure at the vents can cause flow of fuel between the tanks and either early exhaustion of the fuel from one tank or overflow from the other tank, constituting a fire hazard.

No portion of a fuel system should be located in the same compartment as the pilot or cargo unless suitable provisions are taken to guard against the hazards which might be produced by fuel-system leakages. In the case of small aircraft, an excess of ventilation and, if necessary, some degree of isolation or covering is usually sufficient, dependent upon the arrangement of the design. For example, when a fuel tank of less than 20 gallons is underneath the instrument panel in a small aircraft, adequate ventilation is considered sufficient safety provision without any extra covering other than that normally provided. With large aircraft, routing the fuel lines through the center section or the fuselage portion of the airplane may require special consideration. In some cases, the use of an extremely reliable type of fuel line with no connections subjected to motion and the line rigidly attached to primary portions of the structure may be acceptable. In other cases, a definite tunnel may sometimes be necessary to provide proper isolation and ventilation for the line.

8.302 *Fuel-System Operation.* The fuel system should feed sufficient fuel to operate all engines satisfactorily at their takeoff power under all normal attitudes of flight, including moderate rolling or side slipping, down to the unusable-fuel-supply level of the fuel tank. The system should show no air locking or vapor locking tendencies within the range of attitudes and altitudes under which the airplane is to be operated. The system should also feed promptly after one tank has run dry and another tank is turned on. It should not take more than 10 seconds to regain power after switching to the full tank.

Each tank should preferably feed from a single outlet located so as to be below the fuel level in any normal flight maneuver. If two outlets are used, care must be taken to assure that there is no possibility of air locking or failure to feed with a low fuel supply.

8.3020 *Auxiliary Tanks.* Auxiliary fuel supplies may be maintained by means of separate reserve tanks, or by standpipes in the main tank. Standpipes, however, are not recommended because experience with many installations of this type has demonstrated that they may be a hazard to pilots not thoroughly familiar with the airplane. A reliable fuel-quantity gauge with a low level warning mark is considered simpler and more desirable than the use of a standpipe. However, if a standpipe is used, and if the main fuel supply is to be drawn from

an outlet considerably above the bottom of a tank, the reserve or bottom outlet should be marked for use in all takeoffs and landings.

8.3021 *Auxiliary Pumps.* Auxiliary pumps (hand wobble or electrically operated) should be slected and tested for their ability to feed fuel at the same rate of flow as is required for the main pumps. Moreover, the required flow from the hand-operated pump should be delivered without excess physical effort when the handle is operated at 120 one-way strokes per minute. The auxiliary pump should be installed so that it may be readily operated after failure of the main pump without the necessity of opening or closing any valves in the system. Attention should also be given to the location of the hand-operated pump to assure that in operating the pump the pilot will not be able inadvertently to strike or operate any other control with his hand, arm, or sleeve.

8.3022 *Transfer Tanks.* Transfer tanks used to feed main tanks should meet the requirements of main tanks except as to the fuel feed, which may be based on maximum continuous power and speed instead of takeoff power and speed since such tanks are not normally intended for use in takeoff or landing. Such fuel feed may be accomplished by means of gravity, by an electric pump or by a hand pump. If the transfer tanks are intended for use in level flight only, they should be properly placarded to restrict their use accordingly.

8.303 *Fuel-Flow Rate for Gravity-Feed Systems.* The advantages of the gravity system, in use on a large number of low-powered airplanes, are its simplicity and reliability. This type of system would also be desirable for use in higher-powered airplanes if it were not for the fact that the pressures and flow rates required exceed those that a gravity-feed system can supply. The actual pressure available from a gravity system can be calculated at approximately 1 p. s. i. for each 40 inches head of fuel. Thus, it may be estimated that a vertical head of 120 inches of fuel is necessary to produce a delivery pressure at the carburetor of 3 p. s. i. This is obviously more head than is available in any airplane and is the reason why gravity feed cannot be used if any appreciable pressure is required for the carburetor.

To determine whether a gravity system will provide the flow required for the engine installed, a flow test should be conducted in the following manner, with the entire fuel system as installed in the airplane:

(a) Block the airplane on the ground with the thrust line at the best angle of climb with takeoff power. This angle may be determined by flight test or calculation and usually is in excess of the three-point-landing attitude.

(b) The flow should be measured at the carburetor inlet and restricted at that point to the minimum operating pressure for a satisfactory takeoff mixture as recommended by the carburetor and engine manufacturers. (If a reducing nipple is employed at the carburetor inlet, the flow should be measured through the nipple.) A satisfactory method of raising the pressure at the carburetor inlet to the minimum operating pressure, is to disconnect the fuel-feed line, at the carburetor and raise it an amount equal to the required minimum operating pressure. This pressure should be definitely ascertained for the specific carburetor in question, and the Civil Aeronautics Administration will be happy to provide this information when it is needed. The rest of the fuel system should be left intact with all pressure-relief fittings at their service settings.

(c) Prior to beginning the test, the fuel system should be completely drained. The system should be set to feed from one tank only (the flow should be tested for each tank separately with a gravity system). Fuel should be added to the tank slowly until a steady flow is established at the carburetor end of the feed line. Steady flow should be established when approximately the unusable-fuel supply, as defined hereinafter, has been added. Systems requiring an excessive amount of fuel to produce steady flow are unsatisfactory since they tend to airlock. When a steady flow has been established, an additional gallon of fuel should be added to the tank. The time in seconds required for at least 1 gallon of fuel to flow from the feed line should then be obtained. The time required for 1 gallon to flow should not be more than the larger of the two figures computed from the following:

(1) At the rate of 1.2 pounds per hour for each takeoff horsepower.

$$\text{Seconds per gallon} = \frac{18{,}000}{\text{T. O. H. P.}}$$

Where:

T. O. H. P. = Takeoff horsepower

(2) At the rate of 150 percent of the actual takeoff fuel consumption of the engine.

$$\text{Seconds per gallon} = \frac{14{,}400}{\text{S. F. C.} \times \text{T. O. H. P.}}$$

Where:

S. F. C. = Takeoff specific fuel consumption in pounds per horsepower per hour.

Major changes in the arrangement of components of previously approved fuel systems may be substantiated by reconducting flow tests of the fuel system as installed in the airplane, or by appropriate comparative testing of the parts involved to assure that the new parts do not restrict flow to a greater extent than the original parts.

8.304 *Fuel-Flow Rate for Pump Systems.* Fuel-flow rates for pump systems should be conducted by placing the airplane in the same attitude as outlined in the preceding section for gravity-fuel-system tests. Since, in this case, the fuel pump must be operated, it may be driven either by the engine with the pump mounted on the regular engine fuel-pump drive or by a separate electric motor. If it is desired to conduct the test with the pump mounted on the engine, a separate source of fuel external to the airplane should be supplied to operate the engine at takeoff r. p. m. If an electric motor is used to drive the fuel pump it should be capable of operating the pump at the same speed as the pump operates when the engine is running at takeoff r. p. m., and the pump should be mounted at the same height as it would be if mounted on the fuel-pump pad on the engine. In either case the pump discharge should be collected and measured.

The fuel system should then be prepared for conducting the flow tests as described above for gravity-fuel systems. The rate of flow for pump systems should not be more than the larger rate as computed from the following:

(a) At the rate of 0.9 pounds per hour for each takeoff horsepower.

$$\text{Seconds per gallon} = \frac{24{,}000}{\text{T. O. H. P.}}$$

(b) At the rate of 125 percent of the actual takeoff fuel consumption of the engine.

$$\text{Seconds per gallon} = \frac{17{,}300}{\text{S. F. C.} \times \text{T. O. H. P.}}$$

The fuel-flow tests should be made with the main and auxiliary fuel pumps alternately operative and inoperative.

Changes in components such as engine-driven fuel pumps, or wobble pumps, can usually be substantiated by comparative tests of the components themselves without testing the entire airplane system. The new pumps should be capable of delivering the same or greater flow as the original pump when operating at the same suction lift and delivery pressure. The pumps should, of course, be operating at the same speeds for this determination.

8.305 *Fuel Tanks.*

8.3050 *General.* To obtain strength in tank construction, it is usually necessary to provide corners with a generous radius and locate welds on a flat surface removed from the corners. Welding of the tank ends to the body is facilitated by an expansion bead near the weld. Tanks of large size usually require a careful welding arrangement in order to avoid stress concentrations induced by the welding process. Where flanges or heavy sumps are incorporated in tanks to take various connections, they should be large enough and so attached to the tank shell that the stresses induced by the attached connections and piping will not be localized, but will be distributed over a large portion of the thin tank shell. Reinforcement of the shell at these points of attachment should be made where necessary. Tanks approximating a cylindrical form often have their ends dished for additional strength.

8.3051 *Integral-Tank Construction.* Integral tanks (tanks forming part of the airplane structure) should be carefully designed to prevent leakage under flight or landing deformations in the primary airplane structure. New sealing material should be thoroughly investigated to assure its ability to withstand the effects of fuel, periodic drying, heat, cold, vibration, etc. Such tanks should be provided

with inspection holes so that all interior surfaces and corners of the tanks can be reached to allow adequate inspection and maintenance. When the landing-gear attachment is made part of the structure which forms the integral-tank shell there is always a serious danger of rupturing the tank in a ground accident in which the landing gear is deformed or broken. This practice has resulted in serious fires in a number of accidents which would have been rather minor had it not been for the fact that the landing-gear damage resulted in fuel spillage. When integral tanks are used it is therefore important to keep the landing-gear attachment as far as possible from the tank structure.

Corrosion.—Fuel tanks should be constructed to resist corrosion and should not be susceptible to electrolytic action insofar as possible. It is quite important that all welding flux be removed before any anticorrosion processes or coatings are applied. Electrolytic action may be minimized by assuring, insofar as possible, that dissimilar metals are not in intimate contact with each other.

Baffles.—All but the smallest tanks (i. e., approximately 5 gallons or less) should be provided with baffles or stiffening members to prevent failure due to the surging of fuel. This is particularly true of tanks which are either particularly long or wide. Baffle spacing of 12 to 16 inches is usually suitable.

Baffles should be given careful consideration with regard to their own ability to withstand surging loads and with regard to their attachment to the shell to prevent local high stresses from developing there. They should be so designed that no fuel will be trapped between baffles, or between baffles and tank sides. Each interconnecting passage in baffled tanks should have generous vent and flow openings.

Joints.—Rivets and welds should be located at points where they will not aggravate the stresses due to vibration and sloshing. Special attention should be given to riveted joints and seams as sources of possible leakage in tanks of aluminum-alloy, riveted construction. In this connection, soft rivets will usually be found preferable to hard rivets. Particular attention should be given to the intersection of two seams where, usually, special precautions must be taken.

In general, except for seams, rivets should be used sparingly, and only where strength or other considerations require their use, since each rivet is a potential source of leakage. Rivet spacing of three-eighths to five-eighths inch using rivets three thirty-seconds to one-eighth inch in diameter has been found satisfactory in producing leakproof seams in aluminum-alloy tanks. It may be necessary to use a double row of rivets to obtain a gasoline tight joint in large tanks. Seams should be above the fluid level wherever possible.

Expansion Space.—The filler necks of fuel tanks should be located and installed so as to assure that an expansion space, of at least 2 percent of the total tank volume, is automatically provided when the tank is serviced in the normal ground attitude.

Unusable-Fuel Capacity.—Most fuel tanks cannot be bled completely empty but contain a certain residual quantity of fuel called the "Unusable fuel". The quantity depends upon the shape of the tank and the attitude in which the airplane is flown. It is not safe to rely upon the unusable-fuel supply and it is therefore important to determine in advance how much fuel is unusable so that the pilot will have this information available. The unusable-fuel supply should be determined by flying the airplane in each of the configurations outlined below until the engine starts to malfunction due to fuel starvation. When this occurs the fuel valve should be switched to a full tank and a landing made to measure how much unusable fuel remained in the tank being tested. The flight conditions which should be considered are as follows:

(a) Level flight at maximum continuous power, or the power required for level flight at cruising velocity whichever is less.

(b) Climb at maximum continuous power at the estimated best angle of climb at minimum weight.

(c) Rapid application of power and subsequent transition to best rate of climb following a power-off glide.

During these conditions, side slips and skids of the greatest severity likely to be encountered in normal service or turbulent air should be conducted to simulate actual operating conditions. If the configuration of the tank and

airplane are such that one of the above three conditions is obviously most critical, the other conditions need not be investigated.

The fuel-quantity indicator should be calibrated to read zero when the fuel level reaches the unusable-fuel capacity. Flight personnel should be warned accordingly that the unusable-fuel supply cannot be used safely in flight.

Fuel-Tank Sump.—Each tank should be provided with a sump suitable for the collection of sediment and water, unless provision is made in the airplane design to drain all of the water and sediment out of the tank through the system to a separate strainer or sump. When such a separate strainer or sump is used, the drain should be more than usually accessible to encourage drainage before each flight. A cockpit drain control is desirable for this purpose. All bottom surfaces of the tank should tilt toward the sump (or outlet where no sump is incorporated in the tank) at a sufficient angle, with the airplane at rest on the ground, to assure that any appreciable quantity of water will flow to the sump (or outlet). In this regard, it is important to remember that the airplane may rest with one wing lower than the other due to ground irregularities. The fuel-tank design should be arranged so as to avoid even small traps that will result in the continual presence of water which may accelerate corrosion.

When a sump is incorporated in a small tank (25 gallons capacity or less) it should have a capacity of at least one half pint, while tanks of greater capacity should have a sump with a capacity equal to at least one quarter of 1 percent of the total tank capacity. The tank outlet should be located so that no fuel is fed from the tank sump in normal flight attitudes.

The fuel-tank outlet may be placed at the bottom of the tank with no provision for separate drainage of the tank if a sediment bowl is installed so that it is at the lowest point in the system when the airplane is in a normal position on level ground. All parts of the system should drain to the sediment bowl.

Fuel-Tank Outlet.—The fuel-tank outlet should be located so as to comply with the fuel-tank sump provisions. All fuel-tank outlets should be equipped with a suitable finger strainer having a screen of approximately 10 mesh to preclude the possibility of stoppage by foreign objects inadvertently lodged in the tank. The finger strainer should be installed so as to be accessible for inspection and cleaning when the fuel tank is removed for complete inspection. The strainer should point upwards if installed in a tank with a small bottom area adjacent to the outlet. If the bottom is flat and of large area compared to the sides, it may be preferable to install the finger strainer horizontally or at an angle. It is recommended that all outlets face up whenever possible. Side outlets are susceptible to airlocking when the upper part of the outlet is uncovered. A suitable screen permanently incorporated in the design of the tank filler neck is considered the equivalent of a finger screen at the tank outlet.

Fuel-Tank Vent.—Each tank should be vented from the top portion of the airspace in the tank to permit a sufficient flow of air to neutralize changes in pressure resulting from rapid changes in altitude or the removal of fuel from the tank.

Vents and vent lines should be suitably arranged to avoid the collection of water and should be so designed and installed as to preclude the possibility of their becoming clogged by ice or dirt in flight or servicing operations. In the small tanks usually installed in light airplanes, where venting is accomplished by small holes in the filler cap, two or more such holes should be provided in the cap for safe operation. Where the float-and-rod-type, fuel-quantity gage is used, the clearance hole for the rod is considered adequate venting as this type of venting, due to the vibrating action of the rod, has proved very satisfactory in service.

Vents should not terminate at a point where possible fuel discharge might constitute a fire hazard.

Fuel-Tank Drain.—Each tank should be provided with a suitable drain at the low point of the tank in the ground attitude. This drain should discharge clear of other airplane parts and permit complete tank drainage to prevent the entrainment in the tank of an appreciable quantity of water which might affect engine operation, accelerate corrosion, or otherwise impair the airworthiness of the aircraft. Such drains should be installed so that the possibility

of accidental opening is guarded against. To be suitable, a drain should be located so that it can be reached without disassembly or removal of a large piece of cowling, removal of structural parts, or without the use of special tools.

8.3052 *Tank Tests.* Pressure Tests.—All fuel tanks should be pressure tested to 3½ p. s. i. to provide an indication of the ability of the tank to resist distortion and leakage under vibratory, accelerating, and surging loads which may be encountered in flight and landing conditions.

Vibration Test.—Unconventional tanks or tanks of unusually thin material may necessitate vibration testing to substantiate their airworthiness. An unconventional tank might be termed one which has large unsupported or unstiffened areas or similar features. Vibration tests are recommended for all tanks to determine design changes to increase their life. Vibration testing should be accomplished by shaking the tank, two-thirds full of water, at a frequency of approximately 90 percent of rated maximum continuous r. p. m. of the engine used in the airplane, and a total amplitude of one thirty-second to one-sixteenth inch, for 25 hours.

Slosh Test.—In some cases where the tank incorporates features which make it susceptible to damage from the liquid surge, such as the absence of baffles and elongated construction, it may be necessary to supplement the vibration tests with slosh tests. Tanks consisting of a bladder type fuel cell within the structure should be studied for the chafing effect caused by the sloshing of the gasoline due to the normal roll and pitch of the airplane in flight. Such an investigation may be made by means of a test which consists of rocking the tank through an angle of about 15° at approximately 16 to 20 cycles per minute for 25 hours. During the test the bag should be two-thirds full of water.

8.3053 *Fuel-Tank Installation.* Fuel-tank installations should comply with the following general provisions:

(a) Fuel tanks should not be located on the engine side of the firewall.

(b) An adequate airspace should be allowed between the tank and the firewall.

(c) All exposed surfaces and the air space about the tank should be suitably vented and drained or otherwise protected against the accumulation of flammable vapors.

(d) Wherever possible the installation of tanks in personnel compartments should be avoided. If a tank must be located in such a compartment, suitable vaporproof bulkheads should be provided between the tank and the personnel compartments, unless care is taken to provide adequate ventilation to carry away possible fumes and leakage.

(e) The tank should be attached to the primary structure by supports designed so as to minimize stress concentrations, and to prevent distortion and vibration failures of the tank. The supports should be capable of withstanding ground and flight loads without undue deflection.

(f) Fuel tanks should be bonded to the airplane primary structure to avoid static-electricity hazards.

Padded cradle and padded-beam type supports are considered satisfactory provided the location of the beam or cradle is such as to prevent overloading of unsupported or unbaffled sections of the tank. Provisions should also be made for proper support of the tank under reverse-loading conditions. Fuselage and wing tanks should not be supported by brackets or lugs attached to the tank walls, unless special precautions are taken to distribute the loads. Padding under tank straps and on supports should be waterproofed to prevent corrosion, chafing, and absorption of fluids.

If flexible tank liners are employed, they should be well supported so that the liner is not required to withstand fluid loads. Interior surfaces of compartments for such liners should be smooth and free of projections which are apt to cause wear or tear of the liner. Such rough places or projections should be either eliminated or provision should be made for protecting the liner at such points.

Filler openings should be plainly identified with the word "fuel," the minimum octane number, and the capacity. Provision should be made to prevent any overflow from entering the wing or fuselage. In this regard, all recessed filler necks should be provided with overboard drains. Where the fuel-tank filler neck is supported or attached to the airplane structure, adequate flexibility should be pro-

vided in the filler-neck connections, and, if necessary, the junction of the filler neck to the tank reinforced, to take care of the effects of possible relative movements between the tank and the airplane in flight.

8.3054 *Fuel Pumps and Pump Installations.* If fuel pumps are provided, at least one pump for each engine should be directly driven by the engine. Emergency fuel pumps should be provided to permit supplying all engines with fuel in case of the failure of any engine-driven pump. Fuel pumps, when used, should be of such design and so installed that excessive pressures are not built up in the carburetor feed line as a result of pump operation. Some means such as a pressure-relief valve should be incorporated, either in the pump itself or in the system, so as to adequately control the fuel pressure within the limits specified for proper carburetor operation. Consideration must also be given to the power requirements of the pump to assure that they do not exceed the power limitations of the mounting pad and drive provided on the engine. Diaphragm-type pumps should also be considered for hazards as a result of ruptured diaphragms.

When a power-driven pump is used, an emergency hand or a separate power-driven pump of the required capacity should be installed and should be available for immediate use in case of a pump failure, particularly during takeoff.

8.3055 *Fuel-System Lines, Fittings, and Accessories.* Lines and Fittings.—Considerable attention should be given to the fuel-system plumbing, bearing in mind that each joint is a possible source of leakage, each bend a possible source of blockage, each rise a possible source of vapor lock, each low spot a possible source of freezing due to water collection, each length of unsupported tubing is susceptible to vibrational fatique, and each hole or opening through which the line may be routed is a possible source of wear or chafing. In view of these facts it is recommended that the following precautionary details be complied with as far as possible:

(a) Solid fuel lines and fittings should be carefully designed, supported, and located and should be made of materials which suitably resist corrosion. Generally, Air Force-Navy standard (AN Parts) fittings are considered satisfactory.

(b) Flexible hose should be a fuel-and-oil-resisting type approved by the Civil Aeronautics Administration or conforming to Air Force-Navy (AN), or equivalent, standards.

(c) Flexible-hose connections, if used to give required flexibility in a line, should be installed at each end of the line. The hose should be connected to hose nipples or appropriately beaded tubing. Connections made in accordance with Figure 8–1 are satisfactory for this purpose.

(d) It is recommended that fuel lines, except flexible portions, be supported by means of soft blocks and clamps. Friction tapes and rawhide lashings collect grit and induce rapid wear (and sometimes corrosion) due to vibration which causes the lines to work under the lashings.

(e) Flexible connections or lines should be used between all fuel-system parts subjected to relative movement or mass vibrations. Long lengths of tubing should be supported at frequent intervals to preclude fatigue failures due to vibration. Short, solid tubing with flexible connections on each end need not be supported.

(f) Bends of small radius, vertical humps, or restrictions which might promote vapor or air-locking in the lines should be avoided wherever possible.

(g) A fuel-feed line should be tubing of not less than ⅜ o. d. × .032 wall, with corresponding fittings.

(h) Excessively large fuel lines should be avoided so that vapor and air will be carried along with the flow of fuel and not accumulate in the lines.

Fuel lines in the form of L-, S-, and U-bends which are joined by hose connections should be aligned as accurately as possible into the connections and should be braced or supported to prevent the lines from slipping away from the connections under the internal operating pressures and vibration encountered in the lines in service. The bracing or supports should be located so that the flexibility provided for these lines will not be materially affected. In the case of straight lines, it is preferable not to use supports except where the mass or the length

of the line and connections or fittings is such as to cause it to vibrate under flight conditions. Straight lines up to 18 inches in length usually do not require supports. The use of dissimilar metals in, or in physical contact with, the fuel system should be avoided insofar as it is practicable to do so.

Although the minimum recommended size for fuel-feed lines is tubing of $\frac{3}{8}$ o. d. × .032 wall, a larger, minimum size is necessary when the length of the lines is long. If the combined length of the feed lines and fittings from the tank to the carburetor is in excess of 10 feet, at least tubing of $\frac{1}{2}$ o. d. × .035 wall is preferable.

The radii of the tube bends should be not less than three times the outside diameter of the tubing. Sharp bends and fittings should be reduced to a minimum.

Fuel-System Accessories.

Fuel Strainer.—One or more strainers of adequate size and design, incorporating a suitable sediment sump and a means for draining, should be provided at a low point in the fuel line between the tank and the carburetor. Such strainers should be installed in an accessible position so that they may be reached readily for inspection and drainage with the removal or unfastening of only a small piece of cowling or an inspection door. The strainer screen and the screen of the carburetor strainer should each be easily removable for cleaning.

Strainers should be provided with a 60-mesh screen or finer, with an adequate sump for trapping water. The sump capacity should be at least 2 ounces for small-engine installations and should preferably be 4 ounces or greater.

Fuel Valves.—Suitable provisions should be incorporated in the design and installation of fuel valves and their controls to insure compliance with the following, where applicable:

(a) Valves should not be susceptible to external leakage upon the application of torque or axial loads to the operating shaft.

(b) Adequate stops or position indicators should be incorporated in each valve to indicate the position and hold the valve in each desired position.

(c) Suitable, quick-acting valves should be used to shut off the fuel independently to each engine. Such valves should be located on, or to the rear of, the firewall.

(d) All valves should be suitably supported.

(e) Remote controls, if used, should constitute positive connections to avoid possibility of misalinement.

(f) All valves should be suitably marked to show their function.

Fuel valves should be located, whenever possible, so that the effect of gravity and vibration will be to turn the valves on rather than off. Particular attention should be paid to the location of fuel shutoff valves so as to avoid the possibility of the pilot's arm, leg, or any other part of his body or clothing inadvertently striking or catching the valve handle and altering its setting. The design and installation of the fuel-selector-valve handle and markings should be given careful consideration to assure against confusion in fuel-tank selection and inadvertent operation. Fuel-shutoff-valve controls should not be located adjacent to other frequently operated controls (carburetor heat, cabin heat, etc.) unless they are so distinctive in design or so guarded that inadvertent operation will not occur.

8.31 *Oil-System.* In aircraft engines, the lubrication system is designed to meet the problems of high temperatures, high bearing stresses, and proper functioning in all flight attitudes of the aircraft, except inverted. The high temperature of the various engine parts tends to thin out the lubricant (lower its viscosity), which decreases its effectiveness in overcoming metallic friction. Therefore, provisions must be made to cool the oil externally either by radiation from the sump or by means of a separate radiator. The cooled oil, on reentering the lubrication system of the engine, materially assists in reducing the high temperatures of the various parts, particularly the bearings.

The oil pressure pump and its distributing lines and passages circulates the oil under pressure to the various working parts of the engine so long as the oil is supplied to the inlet side of the pump. This then is the function of the lubrication system; to provide an adequate supply of cooled oil to the engine.

8.310 *Oil-System Operation.* In a wet-sump engine, the entire lubrication system is incorporated in the engine.

In a dry-sump engine, an oil sump located in the lowest portion of the crankcase collects all surplus oil drained from the pressure system. A scavenging pump removes the oil from the sump and forces it back into the external lubrication system where it is cooled, collected, and recirculated to the oil pressure pump. It is primarily with regard to this external lubrication system that the following "Good Practice" comments are concerned.

8.311 *Oil-System Arrangement.* The major units in an oil system include the supply tank, the necessary piping and connections, the oil-temperature-regulator assembly (oil cooler or radiator), the oil-temperature gage, and the oil-pressure gage. Some modern lubrication systems also incorporate an oil-dilution system.

The system should be arranged so as to furnish oil by gravity to the inlet side of the oil pressure pump during all normal flight attitudes. It should be readily possible to remove all air, water, or cleansing compounds from the system after overhaul. Foaming is promoted by any of these foreign materials.

8.312 *Oil Tanks.*

8.3120 *General.* Oil supply tanks usually are constructed of aluminum alloy, or stainless steel and are of such design as to permit installation in the aircraft as close to the engine as possible. The design and strength practices outlined previously herein for fuel tanks should also be applied to oil tanks so as to preclude failures from vibration, inertia, or fluid loads. For oil tanks however, the tank should be capable of withstanding an internal pressure of 5 p. s. i. instead of the 3½ p. s. i. recommended for fuel tanks.

8.3121 *Capacity and Expansion Space.* The tank capacity should be sufficient to assure a supply of oil which is adequate for the total-fuel supply. The customary ratio for non-transport-type aircraft is approximately 1 gallon of oil for every 25 gallons of fuel capacity, but not less than 1 gallon for each 75 maximum continuous horsepower of the engine involved. This does not include the oil in the piping, oil-temperature regulator, and engine. In addition to providing for the rated oil capacity of the tank, the tank volume should be such as to include an expansion space which cannot be inadvertently filled with oil when the airplane is in the normal ground attitude. Such expansion space should be at least 10 percent of the tank volume except that it should be in no case less than one-half gallon. This can be accomplished by locating the filler lip with respect to the ground angle so that it controls the maximum level.

8.3122 *Outlet.* The tank outlet usually is located at its lowest section to permit complete drainage while the aircraft is in the ground position or in normal flight attitude. The tank-inlet line from the oil-temperature regulator usually enters the top of the tank and should be of the same size as the outlet line.

8.3123 *Vents.* The vents should be located at the top of the tank and should not be attached to the filler neck or incorporated in the filler cap. They should be so arranged that the oil tank will be properly vented at all flight attitudes of the airplane when the tank is filled to its rated capacity.

In most instances, the crankcase is vented through suitable piping to the top of the oil supply tank. Two vent lines are used on higher-powered engines, one to vent the power section and the other to vent the accessory section. Where oil tanks are not vented to the engine crankcase, special precautions should be taken to prevent overflow or a fire hazard. No traps or pockets should exist in oil-tank vent lines.

8.3124 *Quantity Indicator.* A suitable means should be provided at the tank to determine the amount of oil in the tank. An oil gage of the bayonet type is considered suitable as a means of determining the amount of oil, provided it is marked in gallons and indicates the oil level down to the last 20 percent of the oil capacity.

The gage need only be accessible during filling. Even though a cockpit gage may be provided, there should also be a gage on the tank.

8.3125 *Oil-Tank Installation.* The oil supply tank should preferably be located as high above the pump inlet as practicable. Actually, the tank should be located so that its outlet is sufficiently above the engine oil-pump inlet when the aircraft is in its ground position, to

397956 O - 56 - 6

provide a positive head of oil at the pump. Suction lifts between the tank outlet and the pump inlet should be avoided.

As applicable, the same provisions and practices recommended previously herein for installing fuel tanks should be applied to the installation of the oil tank. These provisions and practices concern (a) the method of supporting the tank to assure proper distribution of loads, (b) protecting the tanks against chafing and corrosion, (c) protection of flexible liners, if used, and (d) ventilation and drainage of tank compartments.

Oil filler openings should be plainly marked with the rated capacity and the word "oil." The opening should be provided with a satisfactory cap which should fit tightly to avoid oil leakage and prevent loss of oil in flight. With systems which provide a vent to the crankcase, the cap should be tight with no holes for venting contained in it. All recessed filler necks should be provided with suitable drains.

8.313 *Oil Radiator.* The oil radiator or cooler should be suitably mounted in the return line (between the scavenging pump and supply tank) and equipped with a suitable drain or drain plug.

A relief valve should be provided either built into the radiator or in the line ahead of the radiator in order to preclude excessive pressures being built up in the core. Various size coolers are used depending upon the amount of oil circulated through the particular engine. The oil temperature may be controlled by means of a thermostatically operated valve, to control the passage of oil through the radiator, and by a shutter assembly installed in the air exit side of the radiator.

The mounting of the oil radiator should be given particular attention so that excessive vibratory stresses will not develop in the cooler elements and their attachments. Where mounting lugs are provided, they should be of rugged construction and their attachment design should be such as to avoid local concentration of stresses. In general, the radiator should be mounted on nonabsorbent pads or other cushioning material.

8.314 *Oil-Temperature Gage.* A suitable means should be provided for measuring the oil temperature near the engine inlet. A splice or Y connection in aluminum tubing for the purpose of inserting the thermometer bulb is satisfactory providing the tubing has a wall thickness of 0.049 inch or more. When the engine manufacturer provides a standard connection to the engine crankcase for an oil-temperature bulb, such a location for the bulb should be used. Calibration of an oil-temperature gage may be readily accomplished by immersing the temperature bulb in boiling water.

8.315 *Oil-System Lines, Fittings and Accessories.* Oil-system plumbing is generally simpler than fuel-system plumbing and the lines are larger in diameter. Nevertheless, the precautionary details and plumbing practices described previously herein for the fuel system should be complied with, as applicable, in the design and installation of the oil-system lines, fittings, and accessories.

8.316 *Oil-System Drains.* With regard to the oil-system drains, one or more accessible drains should be provided at the lowest point in the system to drain all the major parts of the system when the airplane is in its normal position on level ground. When the system employs an oil temperature radiator, it is usually necessary to provide a drain both in the radiator and in the system. These drains are not intended to remove oil from the engine crankcase which should be drained by removing the engine-sump plug. It should be possible to drain practically all the oil in the lines by means of the tank and radiator drains. The drain valves should incorporate means for locking them in the closed position.

The following are recommended as fire-protection measures:

(a) A fire-resistant, oil-inlet line consisting of a fire-resistant hose with assembled end fittings rather than hose clamps.

(b) A means of shutting off the oil flow forward of the firewall. The shutoff should be immediately operable from the cockpit in the event of an emergency.

8.317 *Engine Breather Lines.* Crankcase breathers are provided on the engine to relieve internal pressure resulting from high temperatures and high-speed piston operation. The condition resulting from a clogged breather line

may be hazardous and therefore precautions should be taken in the installation to preclude the possibility of the breather line freezing during cold weather. The following installation practice is recommended:

(a) The breather line should not discharge into the carburetor cold-air intake. Such an arrangement introduces water vapor into the engine-induction system which in turn is conducive to carburetor icing. Consequently, the practice is considered dangerous.

(b) It is preferable to run the breather line down inside and to the rear of the cowling, and so routed that it is not exposed to a direct blast of cold air from openings in the cowl. The line should terminate just outside or flush with the cowling, or just inside the cowling if possible where warm air from the engine will flow over the breather and prevent the freezing of moisture condensed from the breather vapors. In any event the discharge should be so disposed that (1) the possible hazard of ice accretions building up and clogging the line is minimized, (2) no fire hazard will exist from the vapors or spray, and (3) the possibility of oil spraying on the windshield, in case of engine malfunctioning, and thus impairing the pilot's vision, will be avoided.

(c) In no case should the breather line run outside the cowling for an appreciable distance without adequate insulation.

8.4 Cooling

In all aircraft-cooling systems, air is used either directly or indirectly, to carry heat away from the cylinders. In almost all civil aircraft engines this is done directly, without an intermediate-liquid coolant. The problem of cooling an air-cooled engine largely resolves itself into:

(a) Exposing a sufficient surface area of the cylinders to the cooling airflow. The surface area of the cylinders exposed to the cooling airflow is increased by use of cooling fins effectively distributed to provide uniform cooling over the entire combustion chamber, including spark-plug bosses and exhaust valves.

(b) Directing the air efficiently against all parts of the cylinders. A properly designed system of inter-cylinder and cylinder-head baffles is used to force the cooling air into close contact with all parts of the cylinders.

(c) Providing a sufficient cooling airflow, and, if necessary, some means of regulating the airflow in response to varying conditions. A flow of cooling air sufficient to carry away the heat from the cylinders is obtained by means of the cowl which encloses the engine. The flow of cooling air may be regulated by a series of adjustable cowl flaps at the rear of the cowling. The rate of cooling varies with the temperature of the air. Also some cooling is accomplished by the dissipation of heat to the lubricating oil.

8.40 *Cooling Tests.* If the airplane has a substantial cooling margin it may not be necessary to conduct cooling tests for minor changes in the components affecting the cooling characteristics. However, when major changes involving the cooling system are made in an airplane, cooling tests should be conducted to assure that satisfactory cooling characteristics are still maintained. Propeller changes may also necessitate cooling tests being conducted. For example, changing from a fixed-pitch wood to an adjustable-pitch propeller normally results in a decrease of the quantity of cooling air flowing past various parts of the engine, due to the fact that airfoil sections of the propeller blade do not extend as far in toward the center of the hub on an adjustable propeller as they do on a fixed-pitch propeller.

The cooling tests to determine that the maximum temperatures for which the engine was certificated will not be exceeded should be conducted by flying the airplane under maximum continuous power at best-rate-of-climb speed. (A speed one-third of the way between the power-off stalling speed and the maximum level-flight speed.) Such flight should continue for approximately 5 minutes after the temperatures peak or drop off, to assure that stabilization had been reached. Readings should be taken, at the peak, of the hottest cylinder-head temperature, the hottest cylinder-barrel temperature, the oil-inlet temperature, attitude, and outside-air temperature. The observed temperatures thus obtained should be converted to values under conditions of operation when the outside temperature is 100° F. at sea level. This 100° F. temperature is the commonly accepted "hot day standard" for extreme conditions under which an airplane should be able to operate without overheating. To make this

conversion, the following formulas should be used:

(a) Cylinder-head temperature correction:
$T_c = T_o + [100 - T_a - (0.0036 \times A)]$

(b) Cylinder-barrel temperature correction:
$T_c = T_o + 0.7[100 - T_a - (0.0036 \times A)]$

(c) Oil-inlet temperature correction:
$T_c = T_o + [100 - T_a - (0.0036 \times A)]$

Where:

T_c = corrected temperature.
T_o = observed temperature.
T_a = outside air temperature at which peak temperature occurred.
A = altitude at which peak temperature occurred.

8.41 *Accessory Cooling.* In addition to cooling of the engine proper, consideration should also be given to adequate cooling for the accessories compartment. This may be accomplished in many instances by means of cooling-air ducts routed so as to duct ram air directly to critical components such as magnetos, generators, etc.

8.42 *Baffles.* Engine-cylinder, hold-down nuts or studs should not be used for mounting or securing baffles, braces, etc., unless the baffles are made of the same material as the washers employed by the engine manufacturer. Other materials may aggravate cylinder failures due to the studs loosening because of the baffle mounting squeezing out from under the nut.

8.5 Induction System

The function of the induction system is to duct the necessary supply of air to the combustion system of the engine. The condition of this air at the entering face of the carburetor is extremely important. For proper operation, it is essential that the airflow should be smooth and uniform, clean and unrestricted throughout the range of horsepowers expected from the engine. Consequently, starting at the point where atmospheric air is picked up, equal consideration should be given to the ducting, elbows, preheat doors, muffs and other devices which are interposed between the free air and the carburetor.

8.50 *Induction-System Arrangement.* Intake openings for the induction system should be completely outside the engine-compartment cowling unless the hazard of backfire flames is positively eliminated, and the system should comply with the following:

(a) Intake passages should be of sufficient cross-sectional area to supply the required amount of air to the engine without excessive pressure loss. Moreover, they should be of sufficient strength, rigidity, and of proper material to withstand air loads and backfires. The location of the intake should be such as to obtain clean, undiluted air free from dust or exhaust gases. The use of air filters greatly reduces cylinder wear in operations from unprepared landing areas. Also, suitable drains should be provided in all intake passages to facilitate rapid drainage of any fuel which may be present in the system with the airplane in the ground or flight attitude. Such drains should discharge so as to preclude possible contact with the exhaust manifold or exhaust gases.

(b) Screens should only be used if they can be bypassed by means of the alternate air intake in case they become iced or obstructed.

(c) An alternate air supply must be furnished and should provide an adequate means (hot air) for available use when needed to melt ice or to prevent its formation in the air-intake passages and the carburetor. The location and operation of air valves should be such as to permit positive and uniform control and mixing of hot and cold air so that uniform air temperature and pressure, without stratification, will exist at the carburetor.

(d) Entrance or scoop locations have been successful when located on the leading edge of the NACA-cowl ring, within the NACA-cowl nose ring, and short scoops protruding from the accessory compartment. When located on the leading edge of the cowl ring, the entrance is close to the propeller and hence there is less possibility that dust and dirt, whipped up by the propeller tip, will be introduced into the scoop.

(e) In order to obtain uniform distribution of air pressure and temperature at the carburetor entrance, the duct immediately ahead of the carburetor inlet should be straight for a distance of approximately four times the depth or diameter of the duct, if possible. The hot alternate air supply should tie into this duct at a point prior to the straight section. Somewhere in the induction system, before the car-

buretor, a flexible joint is required in the duct to provide relative movement of the carburetor with respect to the cowling or portions of the duct attached to rigid structure.

8.51 *Air Cleaners.* Intake-system air cleaners or backfire arresters, if installed, should satisfy the following provisions:

(a) Means should be provided to permit adequate air to enter the carburetor in the event the cleaner becomes clogged with snow, ice, dirt, etc. A simple spring loaded intake which will open by means of suction if the main intake is obstructed is a desirable means of accomplishing this.

(b) Installation of the air cleaner or backfire flame arrester should not interfere with the proper operation of the carburetor-air preheating system.

(c) Where flame arresters are used to draw air from inside the engine accessory section cowling, backfire and flame penetration tests should be conducted to establish that hazard from backfire is positively eliminated, both from the consideration of flame penetration and the ability of the induction system to withstand backfire pressures.

(d) The effect of the device upon the performance of the engine should be checked by suitable tests. Ground tests should be sufficient unless it is found that the engine is adversely affected.

8.52 *Induction-System Anti-Icing Provisions.*

8.520 *Icing Hazards.* Atmospheric icing conditions encountered in flight make it necessary that provisions be incorporated in the induction system to prevent the formation of ice in the carburetor and air intake. Such precautions are necessary in order to preclude the possibility of engine failure because of an insufficient supply of air or fuel, interference with proper fuel metering, or through imperfect fuel vaporization. Types of ice which may form in the induction system are listed and described as follows:

8.5200 *Impact Ice.* This forms from water which originally existed in the atmosphere as snow, sleet, or subcooled liquid, and also forms from liquid water impinging on surfaces which are at temperatures below 32° F. This ice collects near a surface and at points where changes in the direction of airflow take place so that the water or ice particles with a density much greater than the air impinge upon that surface. The most dangerous impact ice is that which may collect on the metering elements of the carburetor and affect the fuel-air ratio. Other critical points are the preheat valve and the walls of the scoop near it, the roof of the scoop near it, the roof of the scoop elbow, and on screens that may be in the system.

8.5201 *Throttle Ice.* This type forms at or near the throttle in a partly closed position (up to 30°) due to cooling effect resulting from the increase in kinetic energy (increased velocity) of the air in the restricted flow area. It collects on metal parts and consists mainly of particles which freeze outside of the boundary layer and are carried to the metal surfaces, such as the throttle butterfly, by their initial momentum.

8.5202 *Refrigeration Ice.* This forms as a result of the cooling effect of the fuel evaporating after the fuel is introduced into the airstream. This will probably occur most frequently in flight, because the ice may form at carburetor-air temperatures considerably above 32° F. For some float type carburetors it is possible in rare instances to accumulate serious ice during a glide with carburetor air temperatures as high as 93° F. and relative humidity of 30 percent. At low cruise power ice can occur at outside air temperatures as high as 62° F. and relative humidities as low as 60 percent. Most of the heat necessary to evaporate fuel is supplied from the air as it drops in temperature. Fuel evaporation ice can affect airflow by blocking the throat of the manifold riser, it can affect the fuel-air ratio by interfering with the fuel flow, and it can affect mixture distribution or quantity of mixture flowing to individual cylinders by upsetting the fuel flow distribution at the fuel nozzle or airflow distribution in the manifold throat. This refrigeration phenomenon is the most serious of all factors causing carburetor ice.

8.53 *Ice Prevention.* To prevent the formation of ice at the carburetor and air intake, the intake and carburetor passages should be arranged, insofar as practical, so as to avoid the formation of ice. In addition, a hot-air supply, or an equivalent means, which is sufficient to permit safe operation under icing conditions

should be provided. In this regard, the intake for the hot-air system should be sufficiently sheltered to avoid clogging with snow or ice particles. The use of a screen in the hot-air system is not recommended and should only be considered where a heat rise of over 100° F. is available and the screen is of a particularly large mesh. The screen must also be located at a point where fuel spray washed back due to turbulence in the induction system cannot contact it.

A separate cockpit control should be provided to permit the pilot to vary the air supply from full-cold air to full-hot air. Such a control should also be provided to permit overriding any automatic linkage designed to operate the carburetor heat with the throttle. The hot-air valve and controls should be ruggedly constructed and sufficiently strong to withstand the full loads which can be applied by the pilot to free the valve from an icing condition.

8.530 *Preheat Requirements.* The hot-air system should be such that a minimum temperature rise of 90° F. is attainable with sea-level engines and conventional venturi carburetor when the outside air temperature is 30° F. (120° F. with altitude engines and conventional venturi carburetor). Pressure injection-type carburetors on sea-level engines have considerably less tendency to ice but approximately 60° F. heat rise should be provided for de-icing any small accumulations that may occur and for de-icing the ducts, carburetor screen, and other portions of the system.

The amount of heat available should be determined by measuring the temperature difference between the outside air and the air entering the carburetor with the preheat control in the full-hot position. Wherever possible, the temperature rise should be determined for the condition of 30° F. outside air with the airplane in a cruising attitude at approximately 75 percent maximum continuous horsepower. To accomplish this the airplane should be flown in level flight at maximum cruising r. p. m. and 30° F. outside air temperature, or at the highest practical altitude at which the necessary power can be maintained with full-cold carburetor air so as to get as close to 30° F. as possible. Holding the airplane at this altitude and in level flight the indicated airspeed should be reduced 10 percent. Under these conditions then the engine will be delivering approximately 75 percent of its maximum continous horsepower, which is the condition under which the carburetor heat rise should be obtained. After flying the airplane under these conditions for a sufficient time to permit temperatures to stabilize, readings of the outside air temperature and the temperature of the air entering the carburetor should be taken with the carburetor air heater in the full-hot position. The difference between the carburetor air temperature in the full-hot position and the outside air temperature is the temperature rise and should be comparable with the values specified above. The carburetor air temperature should be measured at the intake to the carburetor with a standard temperature bulb. The instrument should be located at a point in the duct cross-section which truly measures the average air temperature. Location in a stratified area of either hot or cold air must be avoided.

8.531 *Carburetor Air Preheater Design.* The exhaust system commonly is used as a source of heat for increasing the temperature of carburetor induction air to prevent the formation of induction ice. There are two principal methods by which heat may be derived from exhaust gases. These are identified as the shroud or muff method, and the intensifier-tube method.

In the shroud or muff-type system, the exhaust gases are carried through the exhaust tubing, which is of normal design, and this collector is completely enclosed by a shroud or muff. The muff is separated from the collector proper by an annular space of from ⅝ to 1 inch, and the carburetor air flows through the annular passage between the collector and muff. The area of the annular section may be increased slightly toward the point of discharge of the heated air to the carburetor in order to allow for the added volume of the warmer air. The muff normally is supported from the collector itself on spacers and is held in place by straps, clips, or bolted flanges. Provision should be made for relative motion between the muff and exhaust collector. The muffs should not bear on or chafe against any part of the engine or airplane structure. The muff should be constructed of heat-resistant material. Aluminum is usually not desirable due to the high temperatures of the

exhaust components in contact with the muff. However, with a well cooled installation aluminum may prove satisfactory in some cases.

With the intensifier-tube preheat system, carburetor air is drawn through a tube which runs through the center of the exhaust collector. This tube must be constructed of heavy-gage stainless steel, Inconel, or equivalent material, and is often dimpled to promote heat transfer. Joints are not permissible in the tube within the collector and provision must be made for a tight slip joint at the points where the tube enters and leaves the collector to assure against exhaust contamination of the engine intake air. Regardless of the type of preheater employed, it, or the installation should comply with the following provisions:

(a) A means should be provided to assure adequate ventilation (continual flow of air) through the preheater when the engine is being operated on full-cold air. Continual flow is necessary for adequate cooling of the exhaust stack, muff, or intensifier tube. The warm air discharge should be so disposed that it does not impinge upon any parts of the fuel system which may aggravate vapor lock.

(b) The preheater should be constructed in such a manner as to permit inspection of the exhaust-collector parts which it surrounds. In the case of an intensifier-tube-type exchanger, it should be possible to conduct periodic inspections of the intensifier tube also.

(c) The construction should be such as to withstand the vibration, inertia, and other loads to which it may be subjected, without failure. Adequate provisions should be made to permit expansion of the various parts when they are heated.

8.6 Exhaust System

The basic function of the exhaust system is to serve as a scavenging means for ridding the airplane of hot-exhaust gases expelled by the engine. The discharge of these gases should be such that under normal operating conditions both in flight and on the ground, the cowling, airplane parts, fuel-and-oil-system lines, components, and drains will be so located with respect to the discharge flow as not to constitute a fire hazard. The discharge flow should also be such that under normal conditions, it will not ignite fuel dripping from the powerplant installation during starting, nor ignite flammable fluids, sprays, or dust being discharged from the airplane.

All portions of the exhaust system should be constructed and maintained, by frequent inspection, so that there will be no cracks, holes, or other source of leakage which will permit hazardous concentrations (1 part in 20,000) of carbon-monoxide gas to enter the pilot compartment.

8.60 *Exhaust Manifold.*

8.600 *Manifold Construction.* Exhaust manifolds should be constructed of suitable materials and should provide for expansion. Exhaust manifolds for engines should be constructed of stainless steel, nickel-chromium-steel alloys, or their equivalent whenever possible. Engines of approximately 300 horsepower or less may use low-carbon steel provided it is sufficiently cooled, and has wall thicknesses of approximately 0.049 inch for installations above 125 horsepower and 0.035 inch for installations of 125 horsepower and under. Stainless steel or Inconel are recommended for installations above 300 horsepower. The manifolding should have sufficient cross-sectional area and provide for smooth flow of the exhaust gases so that the back pressure does not exceed the engine manufacturer's recommendations. Two inches of mercury back pressure is usually considered to be the maximum allowable back pressure at maximum continuous power without special investigation.

8.601 *Manifold Installation.* No manifolding should be located immediately adjacent to the carburetor or fuel-and-oil system parts unless shielded from any possible leakage. It is important that exhaust manifolding be located so that a failure would not cause exhaust flame to be directed toward fuel-and-oil system parts, aluminum structure, cowling supports, etc. Exhaust manifolding should also not be located where fuel or oil is likely to drip onto hot surfaces as fires may obviously result from this source. In general, exhaust manifolding underneath the nacelle or fuselage is considered unsatisfactory. Exhaust discharge points should be at least 10 inches, laterally, from the center line of the carburetor intake and should point outward. Particular care should be taken

to avoid the exhaust contacting fuel which may drip from the carburetor intake or drain, or which may drip from engine lines or accessories. At least 15 inches should be provided between exhaust discharge ports and any fabric covering and in no case should the exhaust pass close enough to the covering to produce an appreciable rise in temperature. Hot particles of carbon frequently are projected from the exhaust so it is necessary to take precaution to prevent these particles from coming into contact with fabric covering on any part of the airplane. Particular care should be taken in the discharging of the exhaust to prevent the ignition of gasoline which might drop to the ground during the priming and starting of an engine.

Some dusts, such as sulfur dust, and some sprays ignite very readily at temperatures as low as 500° F. Since the temperature of the exhaust gases at the exhaust outlet is considerably above this value it is necessary to place the exhaust outlet as far away from the path of the dust or spray discharge as possible, within practical limits. Obviously, the exhaust gases should not be discharged under or along the bottom of the airplane. Moreover, the exhaust discharge should be so directed that it will not be blown in to the dust or spray swath at the end of the field when a pull up is affected. The most satisfactory location for the exhaust therefore is generally above the airplane wing (top wing in the case of a biplane), with the outlet directed outward and upward.

8.602 *Manifold Clearance and Cooling Provisions.* Suitable clearance should be provided between the exhaust manifold and parts which are likely to be adversely affected by heat, and the manifold should be so arranged and cooled that local hot points do not form. Precautions should be taken to insure that manifolds lying inside of cowlings are sufficiently cool to prevent early local failures from excessive heat, and fires as a result of structural inadequacy of the manifold. On radial engines the manifold should be isolated from the accessory compartment by an inner cowl, preferably of stainless steel, with adequate air circulation around the exhaust manifold. On 4 and 6 cylinder flat engines, it is difficult to provide a complete shield between the exhaust manifold and the engine accessory compartment. However, local shields can be used where the manifold is particularly close to any parts carrying inflammable fluids. The configuration of the exhaust can also be made in such a manner that it does not pass through the rear of the engine compartment where many such components are located.

It is also considered highly desirable, at least on engines of approximately 300 h. p. and over to provide a pressure fire extinguisher in the accessory compartment.

8.603 *Manifold Drains.* Where the exhaust discharge is above other portions of the manifold, a drain should be provided at the low points to drain any water or sediment that might collect and tend to cause corrosion. Such drains should discharge overboard at a safe location since exhaust gases or fuel accumulations may sometimes discharge from them.

8.7 Heaters Used in Cabin-Air-Heating Systems

8.70 *Exhaust-System Heat Exchangers.* Heating systems involving the passage of cabin air over, or in close proximity to, the engine exhaust manifolds should not be used unless adequate precautions are incorporated in the design to prevent the introduction of exhaust gas into the cabin or pilot's compartment. The portions of the heating system subjected to exhaust heat should be constructed of suitable materials, be adequately cooled, and readily inspectable. It should be possible to turn the heater completely on or off from the cockpit and a suitable bypass should be provided for the hot air when the valve is in the off position. Reasonable precautions should be taken in the disposition of the bypass discharge so that the possibility of creating vapor locks in fuel lines by the hot air will be avoided. The air intake for the heater should be located outside the cowling in a position where there is no possibility of contamination of the cabin air from the exhaust or other sources of carbon monoxide.

Intensifier tubes should be a stabilized stainless steel of the seamless type and should be readily removable for inspection. Particular care should be taken to prevent joints from leaking exhaust fumes.

Muff-type, cabin-air heaters should be carefully constructed and capable of being readily dismantled. Welds should be avoided in the

portion of the manifold enclosed by the muff. If such welds are used they should be easily accessible for inspection. Expansion joints in the portion of the manifold under the heater muffs are not considered satisfactory.

8.71 *Fuel-Burning Combustion Heaters.* Another means of obtaining cabin heat is the fuel-burning combustion heater. Such units containing their own combustion chambers, heat exchangers, and ignition systems have been found satisfactory and safe provided adequate consideration is given to their installation in order to preclude fire hazards resulting from overheating. The following precautions should be observed in the installation and use of such a heater:

(a) The combustion heater should be of an approved type or a type which conforms to Civil Aeronautics Administration Technical Standard Order C–20. Heaters in the latter category may be identified by this number (TSO–C–20) appearing on the nameplate attached to the heater.

(b) The region surrounding the combustion heater should be well ventilated and drained. The heater should be located at a place where the likelihood of its being contacted by spraying or leaking inflammable fluids, dust, or objects will be remote.

(c) Portions of the ventilating air ducts passing through regions in the airplane where systems carrying flammable fluids or dust are located should be so constructed or isolated from such systems as to preclude the inadvertent introduction of these fluids, vapors, or dusts into the ventilating airstream. In this connection, consideration should be given to the location of both the ventilating air and combustion-air scoops to assure that fluids and dust being discharged from the airplane will not be able to enter the air scoops under any condition or attitude in which the airplane may normally be operated.

(d) The combustion air ducts should be of fireproof construction and should not communicate with the ventilating airstream. If it is impractical to provide separate air ducts to the respective scoops, the combustion air may tie into the ventilating air duct providing the ventilating air duct is suffiicently large to provide the required amounts of air needed for both ventilation and combustion. Also, such interconnection should be at a point sufficiently far upstream from the heater so that it would be impossible for flames and products of combustion, resulting from backfires or reverse burning, to enter the ventilating airstream. The combustion air duct should not restrict the rapid relief of backfires which could cause heater failures due to pressures generated within the heater.

(e) The provisions and precautions recommended previously for powerplant-exhaust systems should also be observed, as applicable, in considering the combustion-heater-exhaust system. In addition, the heater exhaust should be shrouded if any systems containing flammable fluids are located nearby and the shrouds sealed in such a manner that flammable fluids and vapors cannot reach the exhaust. Here also, the exhaust system should not restrict the rapid relief of backfires which could cause heater failure.

(f) The heater-fuel system should comply with all applicable practices of the powerplant-fuel system, as discussed previously herein. Heater-fuel systems lend themselves readily to grouping all controls such as solenoid valves, pressure regulators, and filters. Consequently, as a safety precaution, it is recommended that these controls be installed in a fuel-and-fumeproof container so as to isolate them from the heater proper and its exhaust.

(g) Combustion heaters usually provide drain connections to provide for draining unburned fuel from the heater. These drains should be routed overboard at a point, and in a manner, such that no hazard will exist and the drained fuel will not be able to seep back into the airplane. Drains which operated at high temperatures due to the fact that they carry exhaust gases should be protected in the same manner as the exhaust.

(h) In addition to the normal controls for operating the heater, safety controls should be installed as protection against overheating and uncontrolled burning due to insufficient combustion or ventilating airflow or failure of a cycling switch. Such devices should be independent of the normal controls and should serve to automatically shut off fuel and ignition to the heater in the event an unsafe condition

arises. In this connection, overheat switches should not be located too far downstream of the heater and should be in a position where radiation from the heater can reach the switch (i. e., should not be located beyond any bend in the duct). This will assure that heat transmission to the switch, even in the event of complete stoppage of flow in the ventilating air duct, will still take place by radiation. If radiant heat cannot reach the switch it may take excessive time for the overheat switch to sense an overheat condition and serious damage may take place in the meantime.

8.8 Firewall and Cowling

8.80 *Firewalls.* A suitable firewall should be provided behind the engine-accessory compartment so as to isolate the powerplant from the remainder of the airplane. Firewall materials considered satisfactory without being subjected to substantiating fire tests are:

(a) Stainless steel sheet, 0.015 inch thick.

(b) Mild-steel sheet coated with aluminum or otherwise protected against corrosion, 0.018 inch thick.

(c) Terne plate, 0.018 inch thick.

(d) Monel-metal sheet, 0.018 inch thick.

(e) Nickel-chromium-iron alloy (Inconel) sheet, 0.015 inch thick.

Since the firewall is intended to isolate the engine from the airplane and to provide a fireproof barrier, it follows that it should be suitably stiffened to resist, without undue deflection or buckling, the loads imposed by the operation and weight of controls and accessories attached thereto. Moreover, it should contain only the openings necessary to permit required controls, fuel, ignition, and spray lines to pass through it, and these openings should be fitted with close-fitting grommets or bushings to resist the passage of flame. Rubber grommets are considered suitable only for the smallest openings but fireproof grommets are desirable and are necessary for large openings. Steel bulkhead (firewall) fittings are recommended. Other fittings such as bolts, screws, and rivets used as part of the firewall structure or for accessory attaching purposes should also be of fireproof material.

8.81 *Cowling.* The cowling should have suitable provisions for drainage in flight and on the ground. The drains should be located so as to prevent fuel or oil from dripping upon hot parts of the engine, exhaust, or coming in contact with the exhaust discharge. These drains should also be located so as not to discharge upon airplane parts in such manner as to constitute a hazard. In most cases, small holes in the lower sections of the cowling are sufficient. Stiffener ribs and other structural members of the cowling should be designed and installed in such a manner as to preclude the possibility of fluids damming up in small pools.

8.810 *Cowl Arrangement.* The arrangement of the cowling should permit all necessary inspections which may be required to maintain the airworthiness of the powerplant installation. Moreover, the removal of cowling for these inspections should not require the use of special tools which may discourage conscientious compliance with routine inspection procedures. Inspection doors or easily removable cowling sections should be provided to permit frequent observation and easy removal of accumulations of foreign material, fuel, and oil.

8.811 *Cowl Construction.* Cowling around the powerplant and on the engine side of the firewall should be made of metal or other fire-resistant materials. Portions shielding the exhaust system should be made of a fireproof material such as listed for use as firewalls. The cowling should fit tightly to the firewall unless the airplane surface (that surface behind the firewall) within 24 inches of any opening in the cowling is suitably protected with aluminum or more fire-resistant material.

The strength, rigidity, and attachment of the cowling should be sufficient to resist engine vibration and the loadings produced by critical flight conditions. The strength consideration of the engine nose ring, cowl skirts and panels, cowl flaps, and cowl supporting structure should be carefully investigated, particularly in the larger higher-powered airplanes. Since the aerodynamic load on engine cowling is usually forward, the attachments on the cowling should be arranged to resist this load. In lieu of a stress analysis to determine whether ample strength is provided, comparisons with other similar cowlings may serve as a guide as to the airworthiness of the cowling under con-

sideration. The final criterion, however, is a flight test in which the airplane should be subjected to high-speed-flight maneuvers without failure or distortion of any portion.

8.9 Powerplant Controls, Accessories and Instruments

8.90 *Powerplant Controls.* Powerplant controls are linkages or mechanisms by which the powerplant and its components are operated and regulated. Such regulation or control is usually from the pilot's compartment, with duplicate controls being provided, as the necessity demands, for various crew members. Controls in all cases consist of the following three elements:

(a) A handle, lever, rod, cable, or switch to be operated by the pilot.

(b) A suitable means of connection, such as rods, cables, flexible wire in conduit, hydraulic or pneumatic lines, or electric wires. These may be supplemented by bell cranks, levers, fairleads, hydraulic pumps, Selsyn or Autosyn transmitters and motors, valves, boosters, relays, etc.

(c) An actuating part or mechanism which operates the unit to be controlled. This element may be a rod end, cable end, lever, gearing, hydraulic pump or motor, electric solenoid, motor, or Selsyn or Autosyn motor.

The choice of the means of control depends on the importance of the control to continued engine operation, wheather positive positioning is required, the distance to the part to be controlled, accessibility for control elements, and the forces required.

Rods (or tubing) and cables usually are favored for such critical applications as throttle, mixture, and propeller controls. Such elements lend themselves to positive positioning with little chance of malfunctioning. Of these, rods or tubes may be favored since they are capable of transmitting push, pull, and torque. On the other hand, cable controls offer convenience for long-distance control or where many bends are required to reach the part to be controlled. Control linkages of these types may require supports at intervals throughout their length to prevent them from vibrating.

Flexible-wire-in-conduit type of controls are used for many controls, particularly on small installations. These controls are relatively easy to install due to their ability to make moderate bends without the use of bell cranks or pulleys. Sharp bends should be avoided since they increase operating loads and accelerate wear. Such controls should be carefully supported at close intervals to prevent distortion under load. The adequate support of bends is particularly important.

8.900 *Installation of Powerplant Controls.* All controls should be readily accessible to the pilot, and should be plainly marked as to identity and direction of operation. All cockpit controls connected to the engine should give full travel of the control at the engine, and any normal movement of the engine as installed in the airplane should not cause a change in control setting sufficient to affect seriously its operation. Moreover, the controls should be provided with adequate means to assure that they will be positively held in their flight settings without slipping out of position. The engine control linkages should be designed so as to resist vibration and place no bending on threaded sections. Bolts and nuts should be used even in shear connections rather than clevis pins and cotters, since cotter pins acting as a sole means of securing controls are considered poor practice. Bolts in the system should preferably not be used in a cantilever manner but should be symetrically loaded. Cable controls should be provided with suitable support for all pulleys and fairleads, and should be arranged so that they will operate with a minimum of backlash and friction in the system. Carburetor-air-intake controls and controls for air shutters in the cooling and oil systems should be sufficiently strong to permit their operation under icing conditions.

8.901 *Throttle Controls.* Throttle controls should afford a positive and immediately responsive means for controlling the engine. A forward movement should open the throttle. The control should be constructed of suitable material and be capable of withstanding vibration and the loads which may be imposed by the pilot, and should provide a friction lock, or equivalent, to keep it from creeping in flight. Flexible-type, throttle-control units, if used, should be of an approved type. Regardless of the type throttle control used, it is desirable

that the system be arranged with a spring at the carburetor so that any breakage in the system will cause the throttle valve to go to an open position corresponding to cruising power.

8.902 *Mixture Controls.* The mixture control should require forward movement for "rich" mixture. The control handle should not be located close to any other frequently operated control (such as preheat, etc.) of similar appearance since a pilot may inadvertently place the mixture in the lean position when carelessly intending to operate the other control.

8.903 *Propeller Controls.* The propeller-pitch control should have equivalent airworthiness to the throttle control. A forward movement should increase the r. p. m. The control should be conveniently located as close to the throttle as possible. The pitch control should remain in any set position and, if it is of the constant-r. p. m.-controlled type, it is recommended that it be given approximately the same movement range as the throttle. The positive stops for controllable propellers should be located in the propeller itself and not governed by a positive stop on the propeller pitch control in the cockpit.

8.904 *Fuel-System Controls.* The fuel-system controls should be marked in a conventional fashion and when special fuels or sequences of fuel tank use are necessary the markings should include these instructions. For instance, when fuel of two grades or octane numbers is provided, the fuel control instructions should list which fuel is to be used under each flight condition. The fuel-system marking should also specify the tank or tanks to be used for takeoff, when special operating instructions are necessary. Valves of the type which have their "on" position with the handle in line with the fitting or lines can be marked by providing a plate or painting "on" and "off" positions on adjacent surfaces. Fuel-system controls should preferably be arranged with the handle down when the valve is "on" so that gravity will tend to keep the valve on. In single-tank airplanes it is recommended that the fuel shutoff control be lightly safetied "on" so it will only be used in an emergency. If the control is not safetied, care should be taken not to locate it close to any other frequently operated control of similar appearance since this may result in careless closing of the fuel valve while intending to operate the other control.

Special care should be taken to arrange the fuel valve control so that the fuel valve cannot inadvertently be knocked over to the "off" position, by the pilot. The "off" position should be obvious to the pilot and within his direct view.

8.905 *Preheat Controls.* The carburetor-heat control should preferably be in a location apart from other engine controls, such as mixture and fuel shutoff valves, so as to preclude inadvertent operation due to confusion resulting from close proximity and similar appearance.

8.906. *Ignition Switches.* It should be possible to shut off all ignition with one hand without requiring the pilot to divert his attention from controlling the airplane, and the switches should be so located with respect to other controls or structure that the possibility of their inadvertent operation when the pilot wears a heavy glove, will be remote. The practice sometimes adopted of providing two separate switches in single-engine installations equipped for dual ignition is not without hazard to ground personnel when starting the engine due to the fact that one switch may inadvertently be left in the "on" position. Such switch installations should be located in full view of the pilot to avoid possible hazards. A single, dual-ignition switch is preferred.

Particular care should be taken in the grounding of magneto switches to insure a good ground contact. Otherwise operating personnel may be exposed to a dangerous hazard from this source when starting the engine. The switches should preferably be grounded to the engine. When switches are grounded to the engine mount, care should be taken to insure that all paint is removed and a clean, metal-to-metal contact is made at the ground connection to the structure. In addition, where the engine is mounted on rubber or other insulating, shock-absorbing material, the engine should be bonded to the engine mount.

8.91 *Powerplant Accessories.* Accessories in general fall into three categories, as follows:

(a) Engine accessories which apply directly to the operation and control of engines and propellers such as propeller governors, fuel pumps, and starters.

(b) Aircraft system accessories which provide sources of power for operation of aircraft systems such as generators, air pumps, hydraulic pumps or spray pumps.

(c) Instrumentation such as electric thermometers, tachometer transmitters, and pressure-measurement instruments.

8.910 *Accessory Suitability.* Aircraft engines usually are furnished with pads and drives for accessories in accordance with standardized designs. The accessories, however, are not normally provided as standard equipment. The choice of a suitable accessory depends upon the requirements of the engine and airplane systems, and the unit should, therefore, be selected to perform a definite function in the airplane. The following factors have a direct influence on the choice of the engine-mounted-accessory unit:

(a) The suitability of the accessory to the mounting and driving provisions available on the engine. Since the pad and drive are designed with specific driving-torque and mounting-strength limitations, it follows that the accessory selected should fall within the driving-torque and overhanging-moment limitations of the engine. These limits can be ascertained from the Civil Aeronautics Administration or the engine manufacturer. In many cases the information is listed on Civil Aeronautics Administration engine specifications or in the manufacturers handbooks.

(b) The ability of the accessory to meet the demands imposed by the aircraft system requirements. In this regard, certain operating requirements should be considered, such as:

(1) Endurance and reliability of the accessory.

(2) Reactions of the accessory to the operations throughout the atmospheric conditions and temperature ranges to which the aircraft may be subjected.

(3) Suitability of the accessory to the type of operation for which the aircraft is intended.

(4) Performance of the accessory under emergency conditions.

(5) Ruggedness of the accessory with respect to possible mishandling or improper operation by personnel.

8.911 *Electrical Equipment in Accessory Compartment.* Electrical equipment located in the accessory compartment should have all contact points or parts liable to sparking isolated from the accessory-compartment atmosphere by means of fumetight covers, or an equivalent means of protection, since the presence of an explosive mixture is a definite possibility in the accessory compartment. Electrical wiring and equipment should be so located or otherwise protected that the possibility of their being damaged as a result of leakage from fuel, oil, or hydraulic fluid lines is remote.

8.92 *Powerplant Instruments.* The following instruments should be provided for each engine or tank:

(a) Fuel-quantity indicator.

(b) Oil-pressure indicator.

(c) Oil-temperature indicator.

(d) Tachometer.

(e) Oil-quantity indicator.

(f) Fuel-pressure indicator (if pump-fed engines used).

(g) Manifold-pressure indicator (if altitude engines used).

Those powerplant instruments which are essential to safety in flight such as the tachometer and manifold pressure gage, should be so installed as to be easily visible to the pilot with a minimum practical deviation from his normal position and line of vision when he is looking out and forward along the flight path. Other powerplant instruments should be mounted so as to be visible to the pilot in flight but may, because of their function, be in a less prominent position.

8.920 *Powerplant Instrument Installation.* Powerplant-instrument lines should be installed with the same precautions as recommended and used for fuel-system lines and fittings. In addition, gages or instruments which require the use of fuel, oil, or other flammable-fluid lines, under pressure, should have restrictions incorporated into the line so that line failure will not permit large quantities of the fluid to be spilled in the engine compartment or cockpit. Such restrictions should be installed as close to the source as possible and the orifice or opening should not be larger than approximately a number 60 drill size (0.040 inch).

8.921 *Instrument Markings.* In the marking of instruments it is considered desirable to use standardized markings so as to avoid confusion

or inadvertent hazards due to erroneous readings which may result if the pilot switches from one plane to another where the instruments are not marked or are marked in a different manner. The standard marking practice adopted by the aircraft industry, and which is recommended is as follows:

(a) Green arc representing normal operating range.

(b) Yellow arc representing precautionary range (between maximum continuous and takeoff).

(c) Red radial line representing maximum or minimum limits.

(d) Red arc representing a prohibited range for other than momentary operation.

The marking should be accomplished by any method desired so long as the marking cannot be changed in flight and is readily discernible and durable.

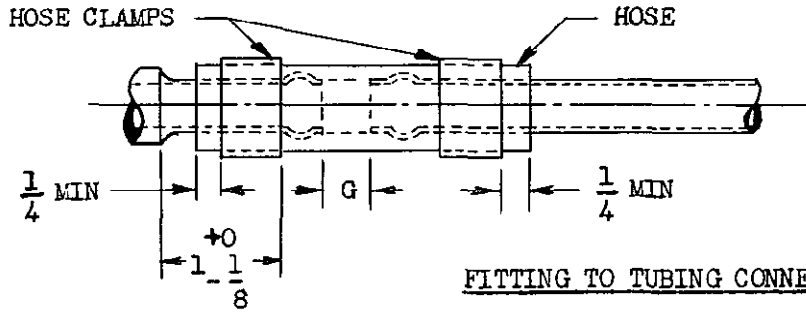

FITTING TO TUBING CONNECTION

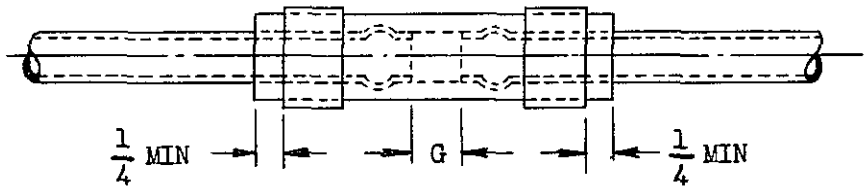

TUBING TO TUBING CONNECTION

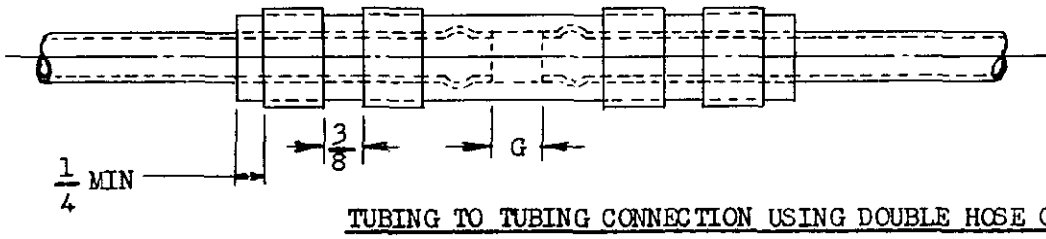

TUBING TO TUBING CONNECTION USING DOUBLE HOSE CLAMPS

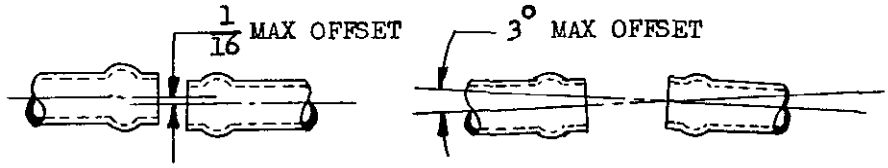

DIMENSIONS IN INCHES.
MINIMUM GAP "G" SHOULD BE 1/2 INCH OR 1/4 TUBING OD, WHICHEVER IS GREATER. MAXIMUM GAP "G" IS NOT LIMITED EXCEPT ON SUCTION LINES USING OTHER THAN SELF-SEALING HOSE. ON SUCTION LINES, MAX G SHOULD BE 1-1/2 INCH OR ONE TUBE DIAMETER, WHICHEVER IS GREATER.

AID FOR DETERMINING HOSE LENGTH

CONNECTION	HOSE OVER FITTING	GAP G	HOSE OVER TUBING (ONE END)	TOTAL HOSE LENGTH
FITTING TO TUBING CONNECTION	1-3/8	ACTUAL GAP	1-1/2	2-7/8 + GAP
TUBING TO TUBING CONNECTION	NONE	ACTUAL GAP	1-1/2	3 + GAP
TUBING TO TUBING CONNECTION USING DOUBLE HOSE CLAMPS	NONE	ACTUAL GAP	2-1/2 APPROX	5 + GAP

Figure 8-1. Flexible-Hose Connections (see 8.3055).

Flight Test

9.0 Performance

9.00 *General.* There are certain principles in the field of aeronautical engineering which do not enter directly into piloting but which are well for a pilot or an operator engaged in agricultural operations to understand in order to know what claims may reasonably be made for an airplane of known weight and power. These principles relate to performance which includes climb, distances required to takeoff and land, etc. The factors which affect the performance of an airplane are interrelated and a change in any one affects all of the others. These factors are: Drag, weight, power.

As a general rule, aircraft that are engaged in agricultural operations are flown at low velocities and altitudes. Consequently, the pilot is being continually faced with the dangers associated with operations in areas of restricted maneuverability caused by obstacles including trees, transmission line wires and poles, houses, etc. It is essential that aircraft which are used for agricultural operations have the climb performance necessary to avoid collisions with obstacles in the path of flight and to minimize the possibility of stall-spin accidents resulting from abrupt pull-ups, steep turns and climbs. In order that sufficient climb performance is maintained for safe operations, it is necessary that the operator understand what makes the airplane climb and the influence of the various factors mentioned above on climb performance.

9.01 *Climb Performance.* At any velocity between the minimum level flight speed and the maximum level flight speed, the power available in the engine is greater than the power required by the airplane to maintain level flight. In level flight the engine is throttled but the extra power is available for the purpose of climbing. The maximum rate-of-climb occurs at a speed where the difference between the power available and the power required (i. e., the excess power) is the greatest. This speed is known as the best rate-of-climb speed. The maximum rate-of-climb of any airplane is a function of its excess power at the best rate-of-climb speed. The greater the excess power, the more climb there is available with full throttle, and conversely less excess power results in lower climb performance. With this in mind, the variation of excess power due to the influence of drag and weight of the airplane and the atmospheric conditions on the engine power will now be discussed.

9.010 *Effect of Drag on Climb.* Drag is defined as the component of the total air force on a body parallel to the relative wind. All parts of the airplane that are exposed to airstream contribute to the drag. The total drag of an airplane may be conveniently divided into two parts, the wing drag and the drag of all other parts except the wings. The latter includes drag created by the fuselage, landing gear, tail surfaces, sprayer and duster equipment and any other external installations which do not contribute notably to the lift. This drag is included under a term expressing its lack of utility, namely, parasite drag; but unfortunately for the present purposes the exact up-to-date definition of this term makes it include also a part of the wing drag called profile drag. The profile drag is the difference between the total wing drag and the drag induced by the lift.

A certain amount of the engine power is required to overcome the total drag of the airplane during flight. Since the drag of the airplane varies with the speed the amount of power required also varies. However, if the drag of the airplane is increased as a result of the installation of additional equipment, such as sprayer or duster apparatus, there is a corresponding increase in the power required throughout the entire speed range of the airplane and consequently a reduction in the amount of excess power available for climbing.

From the above discussion, the importance of minimizing the parasite drag caused by the installation of sprayer and duster equipment is obvious. Since the drag of any object subjected to the airstream is a function of its size

and shape, drag reduction can be accomplished by eliminating all external bracing wires and struts which are not necessary structurally; installing spray tanks inside the fuselage or pilot's compartment; avoiding oversized wind-driven pumps; etc.

Drag is also caused by turbulent air due to interference of strut and wire brace fittings at the fuselage and wing surfaces. This turbulent air represents loss of energy which must be paid for by engine power as in the case of parasite drag. Although drag caused by turbulence at low speed is ordinarily of less importance than parasite drag, poor installation of the spray equipment can cause unnecessary excessive airstream disturbance. Particular thought should be given to keeping the spray booms away from the wing surfaces; considerable turbulence can be created along the entire span when the booms are in proximity to the wings. Strut and wire brace fittings should be kept small and clean or streamlined.

9.011 *Effect of Weight on Climb.* The weight is perhaps the most important of all factors affecting climb performance. Unlike the case of the total drag which is a "fixed" factor depending on the airplane velocity for an established configuration, or power which varies with atmospheric conditions which will be discussed later, weight is controllable by the operator. The combination of fuel and spraying or dusting chemicals loaded in the airplane present the greatest opportunity for controlling weight over a wide range.

When the weight of the airplane is increased, either the velocity must be increased or the angle of attack must be greater during flight in order to produce the additional lift required. The increased weight of the airplane must be balanced by the additional lift created either by the higher velocity at the same angle of attack or the greater angle of attack at the same velocity.

Since the speed range is limited to the lower velocities during operations, level flight is maintained by increasing the angle of attack when greater loads are carried. However, the larger angle of attack also causes a corresponding increase to the drag of the airplane due mainly to the induced drag of the wing. This creates a result similar to the effect of parasite drag on the climb discussed in the previous section, i. e., the additional power required to overcome the increased wing drag reduces the excess power available for climbing.

9.012 *Effect of Power on Climb.* The previous discussion showed how the rate-of-climb is reduced due to a decrease in the excess power when the power required by the airplane is increased with added drag and weight. In both of these cases the power available in the engine was not influenced by the drag or weight. It can be shown how the excess power is also influenced by changes to the available engine power caused by variations in the atmospheric conditions.

An airplane engine is rated for a certain power at a rated number of revolutions per minute. With fewer number of revolutions per minute there will be fewer power strokes per minute and consequently less power even though the throttle is wide open.

Combustion takes place in the cylinders of the engine as a result of igniting of a mixture of gasoline and air. A rich mixture means a small mass of air mixed with a large mass of gasoline vapor. A lean mixture means a large mass of air mixed with a small mass of gasoline vapor.

Variations in atmospheric conditions affect the amount of air inducted by the engine and hence its power. Both the air pressure and air temperature decrease with increasing altitude. Obviously the conditions that prevail at any one given altitude vary somewhat with the weather, but the higher one goes the more nearly constant they become. The intake manifold and the cylinders of an engine are fixed in size. As the altitude is increased, the density of the air decreases. In the same volume there is less mass of air. If the same mass of gasoline is drawn into the cylinder, as at the lower altitude, the mixture is richer since the ratio of the mass of air to the mass of fuel vapor is less. Whether or not the carburetor is adjusted to give the same leanness of mixture, less fuel vapor can be burned per stroke than at the lower altitude. This means less power per stroke, even if the engine is running the same revolutions per minute as at sea level.

High humidity conditions also have an adverse effect on engine power. This is particu-

larly critical as high humidity is commonly associated with high atmospheric temperatures.

9.02 *Determination of Climb Performance.* A general discussion of the qualitative influence of drag, weight, and power on airplane climb performance was presented in the preceding section. In order to determine the actual value of the available rate-of-climb, the weight, altitude, and temperature at the time of operation must be known. An analysis of the climb performance for several airplanes converted for use as crop sprayers or dusters has been made for the purpose of presenting information which will be of assistance in the determination of climb rates.

It must be remembered that the results of the analysis shown herein do not necessarily indicate that these actual climb value will be realized for all airplanes of the same model. The performance of similar models can vary, due to a number of reasons, such as propeller efficiency, condition of the engine, type of duster or sprayer apparatus, etc. However, the results contained herein serve two main purposes: First, the variables which affect climb performance are considerably more informative when a quantitative trend is shown; second, climb performances can be approximated from the results for use in operations without the necessity of burdensome tests to determine that the airplane has not been unsafely overloaded, performancewise.

Data from several types of airplanes were used in order to determine the influence of the drag created by the installation of duster and sprayer apparatus on the rate-of-climb. The climb performance of the airplanes converted for agricultural operations was compared to models of the same type without the duster or sprayer equipment. The results of this comparison showed that the converted airplanes experienced climb reductions in the order of from 15 percent to 30 percent.

Since flight tests data are generally obtained at a weight for which approval is desired, the climb performance for a range of weights was calculated from a mathematical equation developed for this purpose. Obviously, climb performance decreased with increasing weight, but the rate of decrease varied for each particular model.

The results showed climb reductions of from 45 percent to 75 percent at a weight of 20 percent above that which was used as a basis for the analysis. The data in Figure 9–1 has been prepared to show the approximate maximum rate-of-climb available at various weights for several typical models used in agricultural operations.

The influence of altitude and temperature on climb performance was determined from an analysis of data which was available for a number of non-agricultural category aircraft. A chart showing rate-of-climb correction for altitude and temperature, Figure 9–2, was prepared from the results and assumed to apply to aircraft equipped with sprayer and duster equipment. A study of this chart indicates that climb increases approximately 2 percent over the climb at standard temperature, 59° F., for every 10° F. decrease in air temperature. Conversely, climb performance decreases approximately 2 percent under that at standard temperature for every 10° F. increase in air temperature. The effect of altitude indicates that there is a reduction in climb of approximately 8 percent for every 1,000 feet.

The following example is given for the purpose of demonstrating how to approximate the maximum rate-of-climb available for an airplane which is being used as a crop duster.

Example.—Crop duster operations are to be conducted in a Navy N3N–3 airplane which has been loaded to a gross weight of 4,050 pounds. What will be the approximate maximum available rate-of-climb if the air temperature is 80° F. and the airplane's altimeter registers a pressure altitude of 1,500 feet?

Solution.—From Figure 9–1, the approximate maximum available rate-of-climb for the Navy N3N–3 at a weight of 4,050 pounds is 870 feet per minute. From Figure 9–2, the correction factor, F_c, is determined to be 0.84 for a temperature of 80° F., and a pressure altitude of 1,500 feet. The maximum rate-of-climb for the above conditions is calculated to be:

$$870 \times 0.84 = 730 \text{ feet per minute}$$

9.1 Flight Characteristics

9.10 *General.* In 1948 the fatalities per accident among crop dusters were about 20

percent above other types of non-scheduled flying. The destroyed aircraft was 40 percent higher per accident. There must be a reason. It certainly must not be a lack of pilot experience or skill for the pilots involved in the crop dusting accidents over 81 percent had at least 1,000 hours of flying. It must be the nature of the work; the necessity of low flying quick pull-ups, and tight turns. These practices have resulted in the following statistics for crop duster accidents:

49 percent—Collisions with trees, wire, poles, standpipes, etc.

27 percent—Landing gear failure, fires, engine failure, takeoffs, and landings, etc.

24 percent—Stall-spin accidents.

The last 24 percent are caused by stalls at low altitudes followed by a tendency to spin. It is probable that some of the 49 percent are also the result of a stall in a quick pull-up to avoid obstacles, making further climb impossible and a collision inevitable. While the stall-spin type only represents a minority of the accidents, it is responsible for the greatest number of fatalities, (37 percent) and is therefore the greatest potential hazard to the crop-duster.

9.11 *Facts About the Stall.* The *stall speed* of an airplane varies with weight, c. g., loading, type of maneuver (tight turn, quick pull-up), power, etc.

The *stall speed* usually quoted for an airplane is that with power off, gross load, straight unaccelerated flight with the speed slowly reduced by back pressure on the stick.

The speed at which the best angle of climb is obtained is usually about *25 percent above the stall speed.* If the airplane is flying at lower speeds its ability to climb is reduced until at the stall it is zero.

Tight turns and rapid pull-ups increase the stall speed. (A 2 "G" pull-up or a 60° banked turn without altitude change will increase the stall speed 40 percent.)

Overloading increases the stall speed. (25 percent overload increases the stall speed 12 percent.)

A. c. g. loading beyond the allowed limits will increase the stall speed, all depending on the degree of loading beyond the c. g.

With full power the stall speed of an aircraft will generally be about 10 percent lower than that with no power.

Of lesser importance is *a change in the sprayer boom or the spreader* which may disturb the flow of air over the wings or tail resulting in a higher stalling speed.

To aid in preventing these stalls the following practices are recommended:

1. Keep the airplane loaded within the c. g. limits.
2. Keep the loading down to a reasonable amount.
3. When in the vicinity of a stall use full power.
4. Keep the speed well above the stall.
5. Avoid sudden pull-ups and tight turns.
6. After any new installation check the stall characteristics.

Loading is important not only in stalls, but also in handling characteristics. As the c. g. is moved aft the airplane becomes more unstable, the stick forces are reduced, the controls become sluggish and increased attention is necessary to keep it on an even keel. As the c. g. is moved forward the control forces increase and when the forward c. g. is exceeded the stick forces may exceed the values desirable for an aircraft that is being constantly maneuvered. With proper loading, the stable airplane will fly with less pilot effort, giving more time for safe flight planning and more alertness for potential hazards.

Model	Engine	CAA Approved Maximum Weight Lbs.	Best R/C Speed MPH TIAS	Weight Lbs. vs Rate of Climb Ft./Min.						
				Wt. / R/C	Wt. / R/C	Wt. / R/C	Wt. / R/C	Wt. / R/C	Wt. / R/C	Wt. / R/C
Aeronca 7AC	Continental A65	1340	54	1350 / 285	1400 / 250	1450 / 220	1500 / 190	1550 / 160	1600 / 130	1650 / 100
Aeronca 15AC	Continental C145	1750	70	1750 / 610	1850 / 575	1950 / 515	2050 / 455	2150 / 400	2250 / 350	2350 / 300
Boeing 75	Continental W670	3520	68	3500 / 270	3550 / 250	3600 / 230	3650 / 205	3700 / 185	3750 / 165	3800 / 145
Boeing 75	Lycoming R680	3520	70	3500 / 530	3600 / 480	3700 / 435	3800 / 390	3900 / 345	4000 / 300	4100 / 260
Boeing 75	Pratt & Whitney R985	3520	71	3500 / 1180	3600 / 1120	3700 / 1050	3800 / 990	3900 / 930	4000 / 870	4100 / 820
Navy N3N-3	Pratt & Whitney R985	3740	72	3800 / 1030	3900 / 960	4000 / 900	4100 / 840	4200 / 780	4300 / 730	4400 / 680
Piper PA-11 & J3C-65	Continental A65	1250	54	1250 / 410	1300 / 375	1350 / 335	1400 / 300	1450 / 270	1500 / 240	1550 / 205
Piper PA-12	Lycoming 0235-C	1735	63	1750 / 340	1800 / 310	1850 / 280	1900 / 255	1950 / 230	2000 / 205	2050 / 180

Figure 9–1. Note: Best R/C speed is shown for the CAA approved maximum weight. Increase speed approximately 5 percent for a 20-percent weight increase.

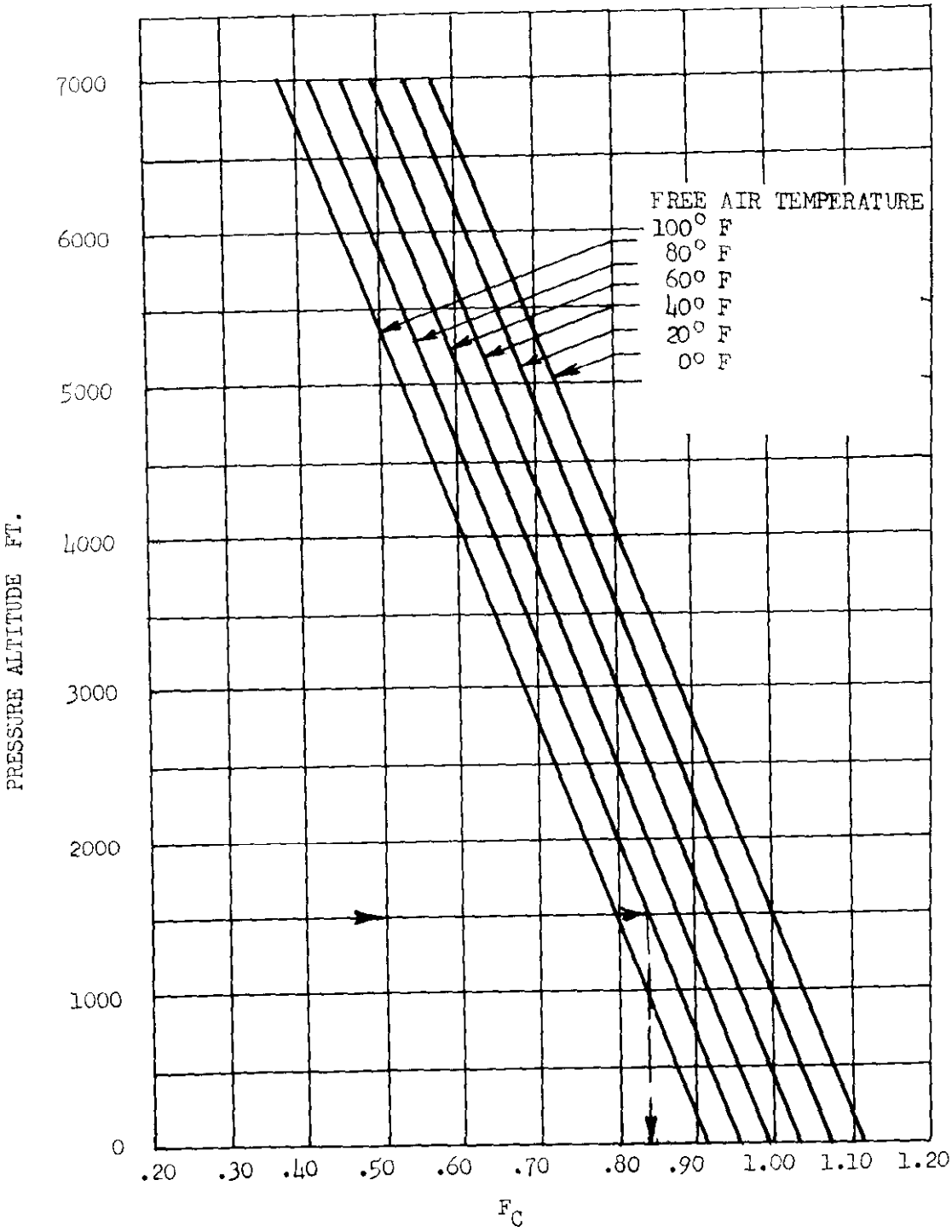

Figure 9–2. F_C Rate of Climb Correction for Altitude and Temperature (see 9.02).

APPENDIX B

Airworthiness Criteria for Agricultural and Similar Special Purpose Aircraft

November 15, 1951

(As amended January 20, 1956)

Appendix B

Airworthiness Criteria for Agricultural and Similar Special Purpose Aircraft

.0 Basis and Purpose

These airworthiness criteria are issued by the Administratior as a guide whereby the applicant for a type certificate may select the appropriate airworthiness requirements for agricultural and similar special purpose aircraft in accordance with CAM 8.10–1. In accordance with CAR 8.10 (a) (1), these airworthiness criteria have been derived from Part 3 of the Civil Air Regulations, "Airplane Airworthiness—Normal, Utility, and Acrobatic Categories," as amended to July 1, 1951. Certain requirements of CAR 3 have been waived, modified, or presented in a different form, to provide criteria appropriate to the types of airplanes and operations provided in section .00 of this Appendix, and to simplify methods and procedures for showing compliance, in accordance with the objectives of CAR 8, as stated by the Civil Aeronautics Board in the preamble to that Part. (The Preamble is quoted in CAM 8.)

.00 *Scope and Applicability.* These criteria may be used as the basis for the issuance or modification of type certificates in the restricted purpose category of an aircraft intended to be operated for agricultural and similar special purpose operations. The criteria provided herein are applicable to single-engine airplanes, intended for low-speed dusting, spraying, and similar types of operations.

.01 *Safety Recommendations.* Several safety recommendations for consideration in the basic design of the aircraft are also included with these criteria. Additional suggestions and examples dealing with the safety aspects of agricultural aircraft and the dispensing installations are published in Appendix A to Civil Aeronautics Manual 8, entitled, "Restricted Category Aircraft Modifications."

.02 *Type Certificate.* An applicant will be issued a type certificate after the aircraft has been shown to comply with these airworthiness criteria together with procedural requirements described in Part 1 of the Civil Air Regulations. The procedure is further explained in CAM 8.10–1 and CAM 8.10 3 (a) (2) of Civil Aeronautics Manual 8.

.03 *Airworthiness Certificate.* An airworthiness certificate will be issued for aircraft type certificated in the restricted category under Civil Air Regulations 8.10 (a) (1) and subsequently manufactured under this type certificate when upon inspection of the airplane the Administrator determines that it conforms to the type design and is in condition for safe operation, and has prescribed operating limitations in accordance with CAR 8.30 and CAM 8.30–1. The procedures for issuance of an airworthiness certificate are described in Parts 1 and 8 of the Civil Air Regulations and further explained in CAM 8.20–2 of Civil Aeronautics Manual 8.

.04 *Procedure for Showing Compliance.*

(a) To expedite approval of the type design at least the following information should be forwarded to the CAA in the early stages of the project:

(1) A general description of the airplane and any unusual or unconventional features therein, together with a three-view dimensional drawing.

(2) A statement of loading conditions to be used for major components. Where loading conditions differ from those specified in these criteria a complete description of the loadings used and their source are required

(3) A statement outlining the method of analysis and tests to be conducted in substantiation of structural and powerplant items. This statement may be combined with the statement of (2) above if desired.

(b) Prior to certification, the applicant for a type certificate should either forward to or make available for review by the Administrator such other descriptive data, test reports, and

computations as are necessary to demonstrate that the aircraft complies with these criteria. This technical information should be forwarded within 3 months after certification.

.05 *Inspections and Tests.* Representatives of the Administrator should have access to the airplane and may witness or conduct such inspections and tests as are necessary in complying with these criteria.

.06 *Individual Certification.* When an applicant requests certification of aircraft on an individual basis, he should show that the actual aircraft conforms to, or is conservative with respect to, the materials, dimensions, and other data used in the analytic or test reports.

.07 *Certification of Series Aircraft.* When the holder of a type certificate requests airworthiness certification of a series of aircraft by comparison with the basic type, he should have available sufficient drawings, jigs, templates, or sample parts to show that the series aircraft are equivalent to or better than the one originally type certificated, in respect to compliance with these criteria.

.08 *Changes.* Changes of the type design previously approved by the CAA are divided into the following classes:

.080 *Minor Changes.* Minor changes which obviously do not impair the airworthiness of the aircraft need not be approved by the CAA.

.081 *Visual Basis Changes.* Changes in this class are those for which the airworthiness may be determined by visual inspection by a representative of the Administrator and need not be substantiated by the submittal of technical data. However, a brief description of such modifications should be forwarded to the CAA for their reference file.

.082 *Design Requirement Changes.* When changes other than those described in sections .080 and .081 are made, the altered aircraft should be shown to comply with the applicable airworthiness requirements.

.083 *Service Experience Changes.* When experience shows that any particular part or characteristic of the aircraft causes an unsafe condition, the Administrator may require appropriate changes to correct such condition.

.09 *Definitions.*

.090 *General.*

.0900 *Standard Atmosphere.* The standard atmosphere should be based upon the following assumptions:

(a) The air is a dry perfect gas.

(b) The temperature at sea level is 59° F.

(c) The pressure at sea level is 29.92 inches Hg.

(d) The temperature gradient from sea level to the altitude at which the temperature becomes −67° F. is −0.003566° F. per foot and zero thereabove.

(e) The density ρ_o at sea level under the above conditions is 0.002378 lbs. sec. ^{2}/ft.^{4}.

.0901 *Airplane Configuration.* This term refers to the position of the various elements affecting the aerodynamic characteristics of the airplane, such as landing gear and flaps.

.091 *Weights.*

.0910 *Empty Weight.* (See sec. .111.)

.0911 *Maximum Weight.* (See sec. .112.)

.0912 *Minimum Weight.* (See sec. .113.)

.092 *Power.* Takeoff and maximum continuous power ratings are those established in accordance with CAR 13.

.093 *Speeds.*

.0930 V_t—True airspeed of the airplane relative to the undisturbed air.

In the following symbols having subscripts, V denotes:

(a) "Equivalent" air speed for structural design purposes equal to $V_t\sqrt{\rho/\rho_o}$.

(b) "True indicated" or "calibrated" air speed for performance and operating purposes equal to indicator reading corrected for position and instrument errors.

		Reference Sections
.0931	V_{s_o}—stalling speed, in the landing configuration	.120 (a)
.0932	V_{s_1}—stalling speed in the configuration specified for particular conditions	.120 (b)
.0933	V_{fe}—flaps extended speed	.6102
.0934	V_m—design maneuvering speed	.2100
.0935	V_d—design dive speed	.2100
.0936	V_{ne}—never exceed speed	.6100

.094 *Structural Terms.*

.0940 *Structure.* Those portions of the airplane the failure of which would seriously endanger the safety of the airplane.

.0941 *Design Wing Area, S.* The area enclosed by the wing outlined (including ailerons and flaps in the retracted position, but ignoring fillets and fairings) on a surface containing the wing chords. The outline is assumed to extend through the nacelles and fuselage to the centerline of symmetry.

.0942 *Design Wing Loading, W/S.* The maximum weight of the airplane divided by the design wing area.

.0943 *Limit Load.* The maximum load anticipated in service.

.0944 *Ultimate Load.* The maximum load which a part of structure should be capable of supporting.

.0945 *Factor of Safety.* The factor by which the limit load should be multiplied to establish the ultimate load.

.0946 *Load Factor or Acceleration Factor, η.* The ratio of the force acting on a mass to the weight of the mass. When the force in question represents the net external load acting on the airplane in a given direction, η represents the acceleration in that direction in terms of the gravitational constant.

.0947 *Limit Load Factor.* The load factor corresponding to limit load.

.0948 *Ultimate Load Factor.* The load factor corresponding to ultimate load.

.095 *Fire Protection.*

.0950 *Fireproof.* "Fireproof" material means a material which will withstand heat equally well or better than steel in dimensions appropriate for the purpose for which it is to be used. When applied to material and parts used to confine fires in designated fire zones "fireproof" means that the material or part will perform this function under the most severe conditions of fire and duration likely to occur in such zones.

.0951 *Fire-Resistant.* When applied to sheet or structural members, "fire-resistant" material means a material which will withstand heat equally well or better than aluminum alloy in dimensions appropriate for the purpose for which it is to be used. When applied to fluid-carrying lines, this term refers to a line-and-fitting assembly which will perform its intended protective functions under the heat and other conditions likely to occur at the particular location.

.0952 *Flame-Resistant.* "Flame-resistant" material means material which will not support combustion to the point of propagating, beyond safe limits, a flame after removal of the ignition source.

.0953 *Flash-Resistant.* "Flash-resistant" material means material which will not burn violently when ignited.

.0954 *Flammable.* "Flammable" fluids or gases mean those which will ignite readily or explode.

.096 *Approved.* Approved, when used alone or as a modifying term (such as approved methods, devices, specifications, materials, etc.) means approved by the Administrator.

.1 Flight

.10 *Procedure.* Flight tests should be made to demonstrate the existence of satisfactory flight and ground handling characteristics. As a minimum measure of airworthiness, compliance with the standards specified in this section should be shown at the critical combination of weight and center of gravity within the range of either for which certification is desired.

.11 *Weight and Balance.* There should be established, as part of the type inspection, ranges of weight and center of gravity within which the airplane can be safely operated. Where comparatively large vertical movement of the center of gravity is allowed, consideration should be given to determining the effect on the flight characteristics.

.110 *Empty Weight.* The empty weight and corresponding center of gravity location should include all fixed ballast, undrainable oil, full engine coolant, and hydraulic fluid.

.111 *Maximum Weight.* The maximum weight should not exceed any of the following:

(a) the weight selected by the applicant,

(b) the design weight for which the structure has been proven,

(c) the maximum weight at which compliance with the flight standards is demonstrated.

.112 *Minimum Weight.* The minimum weight should not exceed the sum of the following:

(a) the empty weight

(b) the minimum cargo (170 pounds in each seat)

(c) 1 gallon of fuel for every 12 maximum continuous horsepower for which the airplane is certificated.

(d) either 1 gallon of oil for each 25 gallons of fuel specified in (c) or 1 gallon of oil for each 75 maximum continuous horsepower for which the airplane is certificated, whichever is greater.

.12 *Performance.*

.120 *Stalling Speeds.* The following should be determined using the procedure outlined in .1330 (e):

(a) V_{s_0}—the stalling speed or the minimum steady flight speed with—
  (1) engine idling, throttle closed (or not more than sufficient power for zero thrust),
  (2) propeller in position normally used for takeoff,
  (3) landing gear extended,
  (4) wing flaps in the landing position,
  (5) cowl flaps closed,
  (6) center of gravity in the most unfavorable position within allowable landing range,
  (7) maximum weight.

(b) V_{s_1}—the stalling, or the minimum steady flight speed with:
  (1) engine idling, throttle closed (or not more than sufficient power for zero thrust),
  (2) propeller in position normally used for takeoff, the airplane in all other respects (flaps, landing gear, etc.), in the particular condition existing in that particular test in connection with which V_{s_1} is being used,
  (3) Maximum weight.

.121 *Stalling Speed Limit.* The stalling speed at maximum weight in the configuration used during normal operations should not exceed 70 m. p. h.

Recommendation.—Studies of forced landings show that, all other things being equal, the fatality rate is proportional to the stall speed, i. e., as the stall speed increases, the number of fatalities per accident increases. The record indicates that fatality rate increases rapidly above approximately 55 m. p. h. Therefore, it is strongly recommended that the stall speed not exceed 55 m. p. h. in the landing configuration at maximum weight.

.122 *Normal Climb.* The steady rate of climb under sea level standard conditions should be at least 8 V_{s_1} or 300 feet per minute, whichever is greater, with—
  (a) maximum weight,
  (b) not more than maximum continuous power,
  (c) landing gear fully retracted,
  (d) wing flaps in the position selected by the applicant for the intended operation.

.13 *Flight Characteristics.*

.130 *Controllability.*

.1300 *General.* The airplane should be satisfactorily controllable and maneuverable during maneuvers appropriate to the intended operation including takeoff, climb, level flight, dive, and landing, with or without power. It should be possible to make a smooth transition from one flight condition to another, including turns and slips, without requiring an exceptional degree of skill, alertness, or strength on the part of the pilot, and without danger of exceeding the limit load factor under all conditions of operation probable for the type.

Recommendation.—In cases where the control forces are considered marginally high the following limits are recommended:

	Type	*Pitch*	*Roll*	*Yaw*
(a) For temporary application.	Stick	60	30	150
	Wheel	75	60	150
(b) For prolonged application.	.....	10	5	20

.1301 *Longitudinal Control.*

(a) It should be possible at all speeds below 1.3 V_{s_1} to pitch the nose downward so that the rate of increase in air speed is satisfactory for prompt acceleration to 1.3 V_{s_1} with—

(1) maximum continuous power, the airplane trimmed at 1.3 V_{s_1},

(2) power off, the airplane trimmed at 1.4 V_{s_1},

(3) wing flaps and landing gear both extended and retracted.

(b) Demonstrations should be made to show that all reasonable changes in flap position and power can be made suddenly at any appropriate airspeed without requiring a change in trim control setting or the exertion of more control force than can be applied readily with one hand for a short period of time.

.131 *Trim.* The means used for trimming the airplane should be such that, after being trimmed, and without further pressure upon or movement of either the primary control or its corresponding trim control by the pilot, the airplane will maintain—

(a) lateral and directional trim in level flight at the normal operating speed with the landing gear and flaps retracted,

(b) longitudinal trim during level flight at any speed from 1.3 V_{s_1} to 1.8 V_{s_1}, with landing gear retracted and with wing flaps in the position selected by the applicant for the intended operation.

.132 *Stability.* The airplane should be longitudinally, directionally, and laterally stable in accordance with the following sections. Suitable stability and control "feel" (static stability) should be required in other conditions normally encountered in service, if flight tests show such stability to be necessary for safe operation.

.1320 *Static Longitudinal Stability in Climb.*

(a) From 1.2 V_{s_1} to 1.6 V_{s_1} the slope of the stick force curve should be stable and such that any substantial change in speed is clearly perceptible to the pilot through a resulting change in stick force with—

(1) wing flaps retracted,

(2) landing gear retracted,

(3) maximum weight,

(4) maximum continuous power,

(5) the airplane trimmed at 1.4 V_{s_1}.

(b) The friction within the control system should be such that the airspeed will return to within 10 percent of the original trim speed when the control force is slowly released from any speed from 1.2 V_{s_1} to 1.6 V_{s_1}.

.1321 *Static Directional and Lateral Stability.*

(a) The static directional stability, as shown by the tendency to recover from a skid with rudder free, should be positive for all flap positions and power conditions, and for all speeds from 1.2 V_{s_1} up to the maximum permissible speed.

(b) The static lateral stability as shown by the tendency to raise the low wing in a sideslip, for all flap positions and power conditions, should—

(1) be positive at the maximum permissible speed,

(2) not be negative at a speed equal to 1.2 V_{s_1}.

(c) In straight steady sideslips, the aileron and rudder control movements and forces should increase steadily, but not necessarily in constant proportion, with increase in angle of sideslip. Rudder pedal forces should not reverse at any obtainable combination of sideslip and rudder angle.

(d) Sufficient bank should accompany sideslipping to indicate adequately any departure from steady unyawed flight.

.1322 *Dynamic Stability.* Any short period oscillation about any of the three primary axes occurring between stalling speed and maximum permissible speed should be heavily damped with the primary controls (a) free, and (b) in a fixed position.

.133 *Stalling.*

.1330 *Level Flight Stalls.*

(a) Stalls should be demonstrated under two conditions:

(1) with power off,

(2) with maximum continuous power.

(b) In either condition it should be possible, with flaps and landing gear in any position, with center of gravity in the position least favorable for recovery, and with appropriate airplane weights, to produce and to correct roll by unreversed use of the rolling control and to produce and to correct yaw by unreversed use of the directional control, during the maneuver described in (e), up to the time when the airplane pitches.

(c) A clear and distinctive stall warning should be unmistakably apparent to the pilot at a speed of 5 m. p. h. but not more than 10 m. p. h. above the stalling speed with flaps and landing gear in any position, both in straight and turning flight.

(d) During the recovery portion of the maneuver it should be possible to prevent more

than 15° roll or yaw by the normal use of the controls, and any loss of altitude in excess of 100 feet or any pitch in excess of 30° below level should be indicated on a placard in the cockpit and in clear view of the pilot.

(e) In demonstrating these qualities, the order of events should be—

(1) with trim controls adjusted for straight flight at a speed of approximately 1.4 V_{s_1}, reduce speed by means of the elevator control until the speed is steady at slightly above stalling speed, then

(2) pull elevator control back at a rate such that the airplane speed reduction does not exceed 1 mile per hour per second until a stall is produced as evidenced by an uncontrollable downward pitching motion of the airplane, or until the control reaches the stop. Normal use of the elevator control for recovery may be made after such pitching motion is unmistakably developed.

.1331 *Turning Flight Stalls.* When stalled during a coordinated 30° banked turn with 75 percent maximum continuous power, flaps and landing gear retracted, it should be possible to recover to normal level flight without encountering excessive loss of altitude, uncontrollable rolling characteristics, or uncontrollable spinning tendencies. These qualities should be demonstrated by performing the following maneuvers:

With the airplane in a coordinated 30° banked turn in level flight, the airspeed should be decreased by steadily and progressively tightening the turn with the elevator control until the airplane is stalled or until the elevator has reached its stop. When the stall has fully developed, recovery to level flight should be made with normal use of the controls.

Recommendation.—For aircraft designed for low speed flight, such as dusting, it is strongly recommended that the airplane be made as stallproof and spinproof as practicable.

.14 *Ground Characteristics.*

.140 *Longitudinal Stability and Control.* There should be no uncontrollable tendency to nose over in any operating condition reasonably expected for the type, or when rebound occurs during landing or takeoff. Wheel brakes should operate smoothly and should exhibit no undue tendency to induce nosing over.

.141 *Directional Stability and Control.* (a) There should be no uncontrollable looping tendency in 90° crosswinds up to a velocity equal to 0.2 V_{s_0} at any speed at which the aircraft may be expected to be operated upon the ground.

(b) The airplane should be demonstrated to be satisfactorily controllable without exceptional degree of skill or alertness on the part of the pilot in power-off landings at normal landing speed and during which brakes or engine power are not used to maintain a straight path.

(c) Means should be provided for adequate directional control during taxiing.

.142 *Shock Absorption.* The shock absorbing mechanism should not produce damage to the structure when the airplane is taxied on the roughest ground which it is reasonable to expect the airplane to encounter in normal operation.

.15 *Flutter and Vibration.* All parts of the airplane should be demonstrated to be free from flutter and excessive vibration under all speed and power conditions appropriate to the operation of the airplane up to at least the minimum value permitted for V_d flight in .2100. There should also be no buffeting condition in any normal flight condition severe enough to interfere with the satisfactory control of the airplane, or result in structural damage. However, buffeting as stall warning, is considered desirable and discouragement of this type of buffeting is not intended.

.2 Strength Criteria

.20 *General.*

.200 *Loads.* The strength criteria of the following sections are specified in terms of limit and ultimate loads. Limit loads are the maximum loads anticipated in service. Ultimate loads are equal to the limit loads multiplied by the factor of safety.

.2000 *Applicability of Loads.* The air and ground loads specified in sections .21 and .22 are considered to be adequate for design of a conventional type aircraft suitable for agricultural and similar special purposes and may be used without further substantiation. For unconventional type aircraft for which little experience is available or for which it is evident that the loadings specified in the following sections are either unconservative or inapplicable, the applicant should propose suitable

loading criteria for approval or comment by CAA. The term unconventional as used above refers to the basic design and Aerodynamic characteristics of the airplane as a whole and/or its major components and for which considerable experience and reliable test data are already available.

.201 *Factor of Safety.* The factor of safety should be 1.5 unless otherwise specified.

.202 *Strength and Deformations.* The structure should be capable of supporting limit loads without suffering detrimental permanent deformations. At all loads up to limit loads the deformation should be such as not to interfere with the safe operation of the airplane. The structure should be capable of supporting ultimate loads without failure for at least 3 seconds, except that when proof of strength is demonstrated by dynamic tests simulating actual conditions of load application, the 3-second limit does not apply.

.203 *Proof of Structure.* Structural analysis may be used for proof of compliance with these criteria provided the structure conforms to types for which experience has shown such methods to be reliable. Structural static tests or dynamic tests, including flight tests, may also be used to demonstrate compliance with these criteria. If desired, combinations of structural tests, flight tests, and analyses may be employed. If static tests are used for proof of compliance, these tests should be carried to ultimate load unless supplemented by analyses. No material correction factor need be applied in cases of tests of structural components. If dynamic tests, including flight tests, are used for demonstration of compliance, they need only be carried to 1.15 times limit load and need not be supplemented by analyses. In the event that dynamic tests, including flight tests are employed, the aircraft used for the tests should be instrumented sufficiently to show that the design conditions have been met. In all cases certain portions of the structure should be subjected to tests as described in section .216.

.21 *Flight Loads.*

.210 *Ceneral.* The flight loads specified may be considered to be independent of altitude and only the maximum design weight condition need be investigated. If loading conditions other than those specified are used, it should be shown that the level of safety specified will be met at all critical weights between the minimum design weight and the maximum design weight with any practicable distribution of disposable load within expected operating limits. The loads and loading conditions specified in the following sections are the minimum for which strength should be provided in the structure. These loads and loading conditions will generally cover loads incident to flight, but will not necessarily cover such loads as ground handling loads.

.2100 *Design Airspeeds.* Design airspeeds include V_m (design maneuvering speed) and V_d (design diving speed). These speeds may be selected by the aircraft designer, except as follows: (a) The selected design diving speed need not be more than 1.50 V_m, but should not be less than 1.40 times V_m; (b) the design maneuvering speed should be at least equal to the speed obtained from Figure .2100 for the maximum wing loading W/S of the design. (However, V_m need not exceed 0.9 V_h.)

.2101 *Load Factors.* The load factors specified in the following paragraphs represent load factors acting perpendicular or parallel as the case may be to the assumed longitudinal axis of the airplane. To obtain loads from the load factors specified, multiply the weight in pounds of the supported object by the load factor.

.211 *Flight Load Factors.* The strength and deformation criteria of section .202 should be met for the airplane as a whole and the supports for dead weight items in the airplane at a limit positive vertical flight load factor of 4.2 and a limit negative vertical flight load factor of 1.0. (However, the limit positive vertical load factor need not exceed the maximum load factor obtainable at V_d.)

.212 *Wing and Wing Supporting Structure Design Conditions.* The primary wing structure and the structure affected directly by wing loads should meet the criteria of section .202 using the applied loads specified in sections .2120 through .2124. The wing may be assumed as a free body and the wing loads balanced by reactions at the wing to fuselage attach points. Although no specific unsymmetrical loading is specified, the wing structure should also be capable of sustaining unsymmetrical loads. See section .2134 for design loads on dead weight items and their

supports. For biplane type airplanes, the distribution of loading between the upper and lower wings of the cellule may be found from Figure .212a. Figure .212b illustrates the wing loading conditions of sections .2120, .2121, and .2122.

.2120 *Positive High Angle of Attack Condition.* A limit loading per square foot of wing area, with upward and forward acting components, should be uniformly distributed over the wing span. The upward acting component should be equal to the maximum value of W/S multiplied by the positive flight load factor of section .211 and should act perpendicular to the basic wing chord plane. The forward acting component should be 30 percent of the perpendicular loading and should act parallel to the basic wing chord plane. The chordwise center of pressure for this loading should be at 20 percent of the wing chord. (For convenience wing applied loads in pounds per square foot are given in Figure .2120 in terms of W/S and load factor.)

.2121 *Positive Low Angle of Attack Condition.* A limit loading per square foot of wing area, with an upward acting component, should be uniformly distributed over the wing span. This component should be equal to the maximum value of W/S multiplied by the positive flight load factor of section .211 and should act perpendicular to the basic wing chord plane at 60 percent of the wing chord. Although no aft acting chordwise loading is specified, the structure should be capable of sustaining aft acting chordwise loads.

.2122 *Negative Low Angle of Attack Condition.* Strength should be provided for downward limit loading uniformly distributed over the wing span equal to the maximum wing loading, W/S, multiplied by the negative flight load factor specified in section .211. The chordwise center of pressure of this wing loading should be at 40 percent of the wing chord.

.2123 *Leading Edge Loadings.* The portion of the wing structure forward of the front spar or forward of the 20 percent wing chord point, if no front spar is provided, should meet the strength criteria of section .202 using the loading specified in Figure .2123 uniformly distributed over the wing span and applied separately in both the up and down direction.

.2124 *Wing Loads in Landing.* When the main landing gear is supported in the wing, the primary wing structure should be designed for the following applied loads:

(a) The loads from Table .2230 if the airplane has a tail wheel type landing gear, or

(b) The loads from Table .2232, columns 2, 3, and 4, if it has a nose wheel type gear.

The main wheel vertical and horizontal loads may be assumed to be balanced by concentrated loads at the wing to fuselage attach points. This condition will be critical only for the wing structure between the landing gear to wing attach points on opposite sides of the airplane.

.213 *Fuselage Design Conditions.* The primary fuselage structure and the supporting structure for dead weight items located in the fuselage should meet the criteria of section .202 under the applied loads specified in section .2130 through .2134. The local supporting structure for the empenage, the control system, the engine, and the landing gear (if installed on the fuselage), should be designed for the most critical loadings specified in sections .214, .215, .2170, and .22 respectively.

.2130 *Forward Fuselage Conditions.* The portion of the fuselage forward of the front main wing attach point should be designed for the applied loads specified in (a), (b), (c), and (d) below, acting independently. The loads from the dead weight items in the forward fuselage may be assumed to be uniformly distributed over the forward fuselage length with the exception of the engine weight load which may be assumed to be concentrated at the engine c. g. if the engine is in the fuselage. The weight distribution corresponding to maximum forward c. g. should be used for all conditions specified in this section. See Figure .2130 for a typical forward fuselage loading diagram.

(a) Down load.—Downward loads from an inertia load factor of 4.2 should be used in the condition.

(b) Up load.—Upward loads from an inertia load factor of 1.0 should be used in this condition.

(c) Side load.—Sideward loads from an inertia load factor of 1.0 should be used in this condition.

(d) Supplementary loads.—When equipped with a nose wheel type landing gear, sufficient strength should be provided for the nose wheel loads specified in Table .2232, col. 5, using: (a) only the sideward and upward load components, and (b) only the forward and upward load components. The inertia load factor should be assumed equal to zero.

.2131 *Aft Fuselage Conditions.* The portion of the fuselage aft of the rear main wing attach point should be designed for the applied loads, specified in (a), (b), (c), and (d) below, acting independently. For simplicity the loads from the dead weight items in the aft fuselage may be assumed to be uniformly distributed over the aft fuselage length with the exception of the empenage dead weight which may be assumed to be concentrated at the empenage c. g. The weight distribution corresponding to maximum aft c. g. should be used for all conditions specified in this section. See Figure .2131 for a typical aft fuselage loading diagram.

(a) Down load.—Downward loads from an inertia load factor of 4.2 combined with the maximum down tail load of section .214 should be used in this condition.

(b) Up load.—Upward loads using the maximum up horizontal tail load of section .214 should be used in this condition. The vertical inertia load factor may be assumed to be zero.

(c) Side load.—Sideward loads from an inertia load factor of 1.0 combined with the maximum vertical tail load of section l214 should be used in this condition. In analyzing for this condition, proper allowance should be made for the torsion which will exist when the center of pressure of the vertical surface is above the fuselage elastic axis.

(d) Supplementary load.—When equipped with a tail wheel type landing gear, sufficient strength should be provided in the primary fuselage structure for the tail wheel loads specified in Table .2231, col. 2, and col. 3. The inertia factor should be assumed equal to zero.

.2132 *Fuselage Section Between Wing Attach Points.* The portion of the fuselage structure between the front and rear main wing attach points should be designed for the critical loadings from either section .2130 or section .2131, whichever is greater. For convenience, the maximum loads (bending moment, shear, torque) at the front or rear attach points found from these sections may be assumed constant throughout the entire section. When large items of mass, such as hoppers, cargo compartments, etc., are located in this region, the local loads due to these installations should be combined with the overall loads in a conservative manner.

.2133 *Fuselage to Wing Attach Points.* The fuselage to wing attach points and fuselage structure directly affected should be designed for the critical loads of sections .2120, .2121, .2122, and .2124 when the landing gear is attached to the wing. Conservative assumption should be used for the distribution of drag load to the attach points. Although no unsymmetrical loading is explicitly specified, sufficient strength should be provided at the attach points and in the carrythrough structure for unsymmaterical loads.

.2134 *Dead Weight Items.* The local supporting structure for dead weight items should be designed for the following limit loads applied independently:

(a) Down loads=4.33×weight of item in pounds.

(b) Up loads=1.0×weight of item in pounds.

(c) Forward and aft=1.0×weight of item in pounds.

(d) Side=1.0×weight of item in pounds.

Since items of mass located away from the airplane c. g. sustain higher load factors due to unbalanced pitching, or yawing moments, conservative assumptions should be made with regard to the design loads imposed on their supporting structure. See section .2170 for loads on engine mounts and sections .3510 and .3512 for loads imposed during minor crashes.

.214 *Control Surface and Control Surface Supporting Structure Design Conditions.*

(a) The control surface and the supporting structure directly affected by the control surface loads should meet the criteria of section .202 using the limit loadings and distribution in Table .214. Note that only symmetrical loadings are specified; the structure should be capable of sustaining unsymmetrical loadings

when such loadings might produce a more critical design condition than those specified.

(b) If the distribution of loading on the movable surface of (a) above results in hinge moments greater than those corresponding to the pilot forces specified in section .215 below, this distribution may be modified as necessary to reduce the hingemoments, but the total loads on the fixed and movable surfaces should remain that of (a).

.215 *Control System Design Conditions.*

(a) The controls and the control system and the parts of the structure directly affected by control system loads should meet the criteria of section .202 under the limit pilot loads specified in Table .215.

Table .215.—Limit Pilot Loads

Control		Design limit load
Aileron	Stick	67 pounds.
	Wheel [1]	53 D [2] inch-pounds.
Elevator	Stick	167 pounds.
	Wheel	200 pounds.
Rudder		200 pounds.

[1] The control wheel, its attachment and affected parts of the control column should also be designed for a single tangential force having a limit value equal to 1.25 times the couple force determined from the above criteria.
[2] D = Diameter of control wheel.

.216 *Control Surface and System Tests.* With the control surface loaded so as to produce the pilot effort forces specified in section. 215, the controls may be operated through their full range of travel. In the test there should be no jamming and the deflection should not exceed 30 percent of the full control surface travel of the unloaded surface. If the pilot effort forces produce surface loadings in excess of the design surface loads of section .214, then the surface may be loaded so as to produce the loadings of section .214 and the difference between this loading and the pilot effort forces may be applied to the system at the control surface horn.

.217 *Supplementary Design Conditions.*

.2170 *Engine Mount Loads.* Engine mounts and the structure directly affected by loads on the engine mount should meet the criteria of section .202 under the limit loads specified in (a) and (b) below.

(a) Engine torque loads as specified in Figure .2170 combined with the loads on the mount resulting from the airplane acceleration specified in section .2120.

(b) Side loads resulting from a lateral acceleration of the airplane equal to 1.5g.

.22 *Ground Loads.* The limit loads specified in the following subsections are external loads and may be used directly for design purposes in lieu of loads based on more rational criteria.

.220 *General.* In general, except as noted in other sections, the ground loads specified below should be used only for the design of the landing gear and its local supporting structure.

.221 *Design Landing Weight.* The design weight used in the landing conditions should be equal to or greater than the maximum gross weight used for the structural design of the airplane for flight loads.

.222 *Load Factor for Landing Conditions.* The strength and deformation standards of paragraph .202 should be met for the airplane as a whole at a limit load factor given in Figure .222.

.223 *Landing Cases.* The landing gear and the structure affected by loads on the landing gear should meet the criteria of section .202 under the loads resulting from the following cases.

.2230 *Main Landing Gear Loads (Tail Wheel Type).* The landing cases specified in Table .2230 and described in Figure .2230 apply to the main landing gear tail wheel type.

.2231 *Tail Wheel Loads (Tail Wheel Type).* The landing cases specified in Table .2231 and described in Figure .2231 apply to the tail wheel. Only the aft fuselage (section .2131) and local tail wheel supporting structure need be investigated for these loads.

.2232 *Nose Wheel Type Gear.* The landing cases specified in table .2232 and described in Figure .2232 apply to landing gear of the nose wheel type.

.224 *Landing Gear Tests for Demonstrating Compliance.* Compliance with the landing condition standards of section .22 may be demonstrated by free drop tests of the complete assembled airplane if the complete airplane is dropped at least twice from the drop height specified in Figure .224 in each of the following attitudes without detrimental permanent set.

.2240 *Nose Wheel Type Landing Gear Drop Tests.* Airplanes equipped with nose wheel type gear should be dropped:

(a) In the full nose-up attitude onto a level platform.

(b) In the level attitude, with the center of gravity in its most forward position, onto platforms under the main and nose wheels and inclined at an angle 18° 16′ up and forward.

(c) In the level attitude onto platforms under the main wheels only and inclined as in (b). The nose wheel should not be allowed to contact in this test.

.2241 *Tail Wheel Type Landing Gear Drop Tests.* Airplanes equipped with tail wheel type gear should be dropped:

(a) In the three-point landing attitude on a level surface.

(b) In the level attitude onto a level platform. The main gear only should be allowed to contact during this test.

(c) The level attitude onto platforms under the main wheels only and inclined at an angle of 18° 16′ up and forward. The tail gear should not be allowed to contact in this test.

.225 *Landing Gear Wheels and Tires.* Main and nose landing gear wheels should be of an approved type. The main wheels and tires should have static ratings equal to or greater than the gross weight of the airplane divided by the number of main wheels. The nose wheel and tire should have a rating (tire rating to be compared with the dynamic rating established for such tires) equal to or greater than the load obtained assuming a force of lg downward and 0.31 g forward acting at the center of gravity of the airplane.

.226 *Brakes.* If brakes are installed, they should be adequate for speed control during taxiing and should be capable of preventing the aircraft from rolling while applying full engine takeoff power.

.3 Design and Construction Standards

.30 *General.* The structure and all mechanisms essential to the safe operation of the airplane should not incorporate design details or be constructed of materials which experience has shown to be unreliable or otherwise unsatisfactory. The use of standard parts and approved components is recommended.

.31 *Special Factors.* If analysis is used to prove the strength of fittings, the loads specified in section .2 should be multiplied by an additional factor of 1.15. Castings used in primary structural parts should be designed for loads exceeding the loads specified in section .2 by a factor of 2.00 unless special quality control measures for such castings are established. To account for wear and other service problems, bearing surfaces of control surface hinges should have strength for loads appreciably in excess of the design loads of section .2 unless lubricated ball or roller bearings are incorporated.

.32 *Control Surfaces and Systems.*

.320 *Flaps.* The motion of flaps on either side of the airplane should be synchronized by a positive interconnection unless it is shown by flight test that the airplane has safe characteristics with the flaps extended on one side only.

.33 *Flutter Prevention Measures.* Wing, tail surface, control systems and other structural parts should be free from flutter at all speeds up to V_d as defined in section .2100.

One of the following means may be used in showing compliance:

(a) a satisfactory flutter analysis may be submitted,

(b) the standards of CAA Airframe and Equipment Engineering Report No. 45 "Simplified Flutter Prevention Criteria for Personal Type Aircraft" may be met, or (c) flight flutter tests may be conducted to show that a flutter condition would not develop at speeds up to V_d.

.34 *Vision.* The pilot compartment should be arranged to afford the pilot a sufficiently extensive clear and undistorted view for the safe operation of the airplane. An unobstructed range of pilot view in an arc 90° each side of the airplane center line and 20° from the horizontal down over the nose is recommended.

.35 *Protection.*

.350 *Crew Protection.*

.3500 *Seats, Safety Belts or Harnesses.* Sufficient strength should be provided in the seat and seat installation and in the attachment for safety belt and/or harness for crash landings in which it is assumed that the following ultimate acceleration forces are acting separately on the occupants:

(a) Forward —9.0

(b) Sideward—3.0

(c) Vertical —6.0 (down)
3.0 (up)

The weight of a crew member should be assumed to be at least 180 pounds.

Recommendation. The military services have found that crash injuries and fatalities can be greatly reduced by providing cockpit structures, safety belt, shoulder harness and seat installations which can withstand a forward acting acceleration force on the occupants of 20 g or more. It is suggested that similar provisions be incorporated in agricultural aircraft.

.3501 *Cockpit Hazards.* Protrusions, knobs, sharp corners or other objects which are likely to be contacted by the crew in the event of a minor crash should be suitably padded or constructed so as to minimize the likelihood of serious injuries to the crew. If shoulder harnesses or equivalent means are provided to retain the crew in position in minor crashes, no padding or similar provisions need be provided.

.3502 *Cargo Provisions.* It is recommended that heavy items of mass, such as dust or spray containers, be so located or installed in such a manner that they will not shift and injure the crew under crash conditions. The items themselves and the supporting structure for such items located aft of or in the immediate vicinity of the cockpit should be designed to restrain these items and their contents when subjected to the crash acceleration specified in section .3500.

.3503 *Toxic Materials.* If toxic materials are to be carried or dispersed by the aircraft suitable provisions for ventilating the cockpit to minimize the hazard to the crew from the toxic materials should be provided. Compartments containing toxic material containers and lines should comply with the ventilation and drainage criteria of section .3511.

.351 *Aircraft Protection.*

.3510 *Corrosion Protection.* All members of the structure should be suitably protected against deterioration or loss of strength in service due to weathering, corrosion, abrasion or other causes. Due to the corrosive nature of some dusts and sprays used in agricultural operation, the design should be such as to reduce entry of these materials into interiors of wings, fuselage, etc.

.3511 *Dispensing Installations.* Compartments containing flammable material containers and lines should be free of ignition sources and should be provided with adequate ventilation and drainage to assure that no hazardous accumulation of flammable liquids or vapors can occur. Containers of flammable materials should be vented overboard and provided with positive seal filler caps. All flammable material discharge, vent, and drainage points should be located so as to obviate possible ignition from engine exhaust or other source. Care should be taken to provide leakproof seams and connections. All metal components, including equipment items of the airplane, should be electrically bonded by means of a flexible conductor attaching the component to the basic structure of the airplane.

[All liquid containers should be baffled so as to prevent rapid movement of their contents and sudden shifting of the aircraft center of gravity. The containers should be designed and tested for pressures obtained from Figure .3511. The g values shown in the figure are the maximum anticipated in flight for the aircraft in which the tank is installed. In using Figure .3511, first select the g value, then obtain the corresponding test pressure shown for the tank height. In no case should the limiting pressure be less than 3.5 p. s. i. Where spraying is done with highly volatile and flammable liquids or where the tank has a return line, it is recommended that an additional pressure differential of the order of 1.5 p. s. i. be included.]

.3512 *Aircraft Structure Covering.* Where flammable materials can impinge directly on surfaces of the airplane during dispensing operations, such surfaces should be at least flame resistant.

.4 Powerplant Installation

All components of the powerplant installation should be constructed, arranged, and installed in a manner which will assure the continued safe operation of the airplane and powerplant. Accessibility should be provided to permit such inspection and maintenance as is necessary to assure continued airworthiness.

.40 *Engines.* Engines installed in certificated airplanes should be of a type which has been certificated in accordance with the provisions of Part 13, "Aircraft Engine Airworthi-

ness," or should be military approved aircraft engines.

.41 *Propellers.* Propellers installed in certificated airplanes should be of a type which has been certificated in accordance with the provisions of Part 14, "Aircraft Propeller Airworthiness," or should be military approved aircraft propellers. The maximum engine power and propeller shaft rotational speed permissible for use in the particular airplane involved should not exceed the corresponding limits for which the propeller has been certificated.

.410 *Propeller Vibration.* In the case of airplanes equipped with propellers having metal blades or other highly stressed metal components, the vibration characteristics of the propeller-engine combination should be approved by the Administrator.

.411 *Propeller Pitch and Speed Limitations.* Suitable means should be provided to limit the propeller pitch and speed to values which will assure safe operation under all normal conditions of operation.

.42 *Fuel System.* The fuel system should be constructed and arranged in a manner to assure the provision of fuel to each engine at a flow rate and pressure adequate for proper engine functioning under all normal conditions of operation, and also to minimize the possibility of the formation of vapor lock in the system.

.420 *Fuel System Arrangement.* Fuel systems should be so arranged as to assure against the possibility of air lock due to unequal feeding in case two or more tanks can supply fuel simultaneously.

.421 *Fuel Flow Rate.* The ability of the fuel system to provide the required fuel flow rate should be demonstrated, with the airplane in the attitude corresponding to the best angle of climb at minimum weight, and at a pressure not less than the minimum permissible for satisfactory engine operation with the particular carburetor setting employed. For the purpose of this demonstration the attitude at the best angle of climb may be calculated. The quantity of fuel in the tank being tested should not exceed 10 percent of the tank capacity, plus 1 gallon.

.4210 *Fuel Flow Rate for Gravity Feed Systems.* The fuel flow rate for gravity feed systems (main and reserve supply) should be 150 percent of the actual takeoff fuel consumption of the engine.

.4211 *Fuel Flow Rate for Pump Systems.* The fuel flow rate for both the primary and emergency pump should be 0.9 pound per hour for each takeoff horsepower or 125 percent of the actual takeoff fuel consumption of the engine, whichever is greater. In the case of hand-operated pumps, this flow should be available when the pump is operated at not more than 60 complete cycles (120 single strokes) per minute.

.422 *Fuel Tanks.* Fuel tanks should be capable of withstanding without failure any vibration, inertia, and fluid and structural loads to which they may be subjected in operation. Suitable means should be provided to permit satisfactory drainage in the normal ground attitude of water, sediment, or other foreign material that may have collected in the tank. The fuel tank outlet should be provided with a suitable finger strainer which is accessible for cleaning.

Fuel tanks should be suitably vented from the top portion of the tank. The vent should be so constructed as to preclude the possibility of siphoning fuel during normal operation. There should be no undrainable points in the vent line in either the ground or level flight attitude. Vents should not terminate at points where the discharge of fuel from the vent outlet will constitute a fire hazard or from which fumes may enter personnel compartments or other portions of the airplane.

Unless a separate sediment bowl is provided, fuel tanks should be provided with an adequate sump which will be effective in all normal ground and flight attitudes.

An expansion space of at least 2 percent of the tank capacity should be provided in the tank. It should not be possible inadvertently to fill the expansion space when the airplane is in the normal ground attitude.

.4220 *Fuel Tank Pressure Test.* Fuel tanks should be capable of withstanding an internal test pressure of 3½ p. s. i. without failure or leakage or excessive distortion.

.4221 *Fuel Tank Installation.* The method of support for tanks should be such as to ade-

quately distribute over the tank surface the loads resulting from weight of the fluids in the tanks. Tanks should be protected against chaffing at the points of support. If flexible tank liners are employed, they should be so supported that wear of lines will not occur and so that the liner will not be required to withstand fluid loads.

Tank compartments should be ventilated and drained to prevent the accumulation of flammable fluids or vapors. Compartments adjacent to tanks which are an integral part of the airplane structure should also be ventilated and drained.

Fuel tanks should not be located on the engine side of the firewall.

.423 *Fuel Pump and Pump Installation.* If fuel pumps are provided, at least one pump for each engine should be directly driven by the engine. Emergency fuel pumps should be provided to permit supplying all engines with fuel in case of the failure of any engine-driven pump.

.424 *Fuel System Lines, Fittings, and Accessories.* Fuel lines should be installed and supported in a manner which will prevent excessive vibration and will be adequate to withstand loads due to fuel pressure and accelerated flight conditions. Lines which are connected to components of the airplane between which relative motion might exist should incorporate provisions for flexibility. Drains should be provided to permit safe drainage of the entire fuel system.

.4240 *Fuel Strainer.* An accessible fuel strainer should be provided between the fuel tank outlet and the fuel pump or carburetor inlet.

.43 *Oil System.* Each engine should be provided with an independent oil system capable of supplying the engine with an ample quantity of oil at a temperature not exceeding the maximum which has been established as safe for continuous operation.

.430 *Oil Tanks.* Oil tanks should be capable of withstanding without failure all vibration, inertia, and fluid loads to which they might be subjected in operation.

An expansion space of not less than ten percent of the tank capacity or one-half gallon, whichever is greater, should be provided. It should not be possible inadvertently to fill the oil tank expansion space when the airplane is in the normal ground attitude.

Oil tanks should be suitably vented. Vents should be so arranged that condensed water vapor which might freeze and obstruct the line cannot accumulate at any point.

.4300 *Oil Tank Pressure Test.* Oil tanks should be capable of withstanding an internal test pressure of 5 p. s. i. without failure or leakage, or excessive distortion.

.4301 *Oil Tank Installation.* Oil tank installations should comply with the requirements of section .4221.

.431 *Oil System Lines, Fittings, and Accessories.* Oil lines should comply with the provisions of section .425. Drains should be provided to permit safe drainage of the entire oil system and should incorporate means for positive locking in the closed position.

.432 *Engine Breather Lines.* Engine breather lines should be so arranged that condenser water vapor which might freeze and obstruct the line cannot accumulate at any point. Breathers should discharge in a location which will not constitute a fire hazard in case foaming occurs. The breather should not discharge into the engine air induction system.

.44 *Cooling.* Tests should be conducted to demonstrate that suitable cooling means are provided to maintain engine temperatures within safe operating limits under all normal conditions of operation when the outside air temperature is 100° F. at sea level (decreasing at the rate of 3.6° F. per thousand feet above sea level).

.45 *Induction System.* Each engine should be provided with an alternate air intake in addition to the normal carburetor air intake.

.450 *Induction System Anti-Icing Provisions.* The engine air induction system should incorporate a preheater or equivalent means to minimize the possibility of carburetor icing.

.451 *Carburetor Air Preheater Design.* Means should be provided to assure adequate ventilation of exhaust carburetor air preheaters when the engine is being operated with carburetor heat off. The preheater should be constructed in such a manner as to permit inspection of exhaust manifold parts which it surrounds.

.46 *Exhaust System.* The exhaust system should be constructed and arranged in such a manner as to assure the safe disposal of exhaust gases without the existence of a hazard of fire or carbon monoxide contamination of air in personnel compartments.

Unless suitable precautions are taken, the exhaust discharge and exhaust system parts should not be located in close proximity to portions of any systems carrying flammable fluids, vapors, or dust, nor should they be located under portions of such systems which may be subject to leakage. All exhaust system components should be separated from adjacent flammable portions of the airplane which are outside the engine compartment by means of fireproof shields. The exhaust outlet should not be located at any point which might result in ignition of flammable fluids or dust being discharged from the airplane.

.460 *Exhaust Manifold.* Exhaust manifold should be made of fireproof material. Portions of the manifold which are connected to components between which appreciable relative motion might exist should incorporate provisions for flexibility.

.461 *Exhaust Heaters Used in Cabin Air Heating Systems.* Heat exchangers of this type should be so constructed as to preclude the possibility of exhaust gases entering the ventilating air. Suitable means should be provided to permit inspection of critical portions of the heater or exhaust manifold parts.

.47 *Firewalls.* All engines should be isolated from the remainder of the airplane by means of a tight firewall constructed of the following materials or equivalent:

(a) Heat and corrosion resistant steel 0.015 inch thick.

(b) Low carbon steel, suitably protected against corrosion, 0.018 inch thick.

.48 *Cowling.* Provision should be made to permit rapid, complete and safe drainage of all portions of the cowling in all normal ground and flight attitudes.

Cowling should be constructed of fire-resistant material. All portions of the airplane lying behind openings in the engine compartment cowling should also be constructed of fire-resistant materials for a distance of at least 24 inches aft of such openings.

.49 *Powerplant Controls and Accessories.*

.490 *Powerplant Controls.* Controls should maintain any necessary position without constant attention by the flight personnel and should not tend to creep due to control loads or vibration. Controls should be plainly marked to show their function and method of operation unless the function is obvious.

.491 *Powerplant Accessories.* Accessories driven by the engine should be limited in power requirements and overhung mass to the maximum allowable for the engine drive on which they are mounted.

Electrical accessories subject to arcing or sparking should be installed so as to minimize the possibility of their contact with any flammable fluids or vapors which might be present in case of failure or leakage.

.5 Equipment

.50 *General.* Only the equipment specified in section .51 of these criteria need be installed in an airplane submitted for certification under these criteria. The equipment provided should have no features which experience has shown will render it unreliable or otherwise unsatisfactory. Such additional equipment as is necessary for a specific type of operation is listed in other pertinent parts of the Civil Air Regulations.

.51 *Required Equipment.*

(a) Airspeed indicator
(b) Altimeter
(c) Powerplant instruments
(d) Approved safety belts or harnesses.

.52 *Recommended Equipment.*

(a) Magnetic direction indicator
(b) Stall warning indicator
(c) Approved shoulder harnesses.

.6 Design and Operating Limitations and Information

.61 *Design Limitations.* Design limitations should be established as follows and submitted to the CAA for inclusion in the Aircraft Specification.

.610 *Airspeeds.*

.6100 *Never-Exceed Speed,* (V_{ne}). This speed should not exceed 0.9 times the maximum dive speed demonstrated in flight tests or 0.9 V_d, as defined in section .2100, whichever is the lesser.

.6101 *Maneuvering Speed.* (V_m). This speed should not exceed the speed from Figure .2100.

.6102 *Flaps Extended Speed* (V_{fe}). The flap extended speed should not exceed 24 times the square root of the wing loading W/S, where W is the maximum gross weight used for design of the airframe.

.611 *Powerplant.* The applicable limits on rotational speed and manifold pressure should not exceed, and the fuel octane rating should not be less than, those established in the type certification of the engine and propeller.

.612 *Maximum Weight.* The airplane design limitation maximum weight should be determined in accordance with section .111.

.613 *Airplane Center of Gravity.* The design limitation center of gravity limits should be those determined in accordance with section .11.

.62 *Operating Limitations.* Operating limitations appropriate to the special purpose for which the airplane is to be used will be prescribed by the Administrator on Form ACA-309 in accordance with CAM 8.30-1.

.63 *Markings and Placards.*

.630 *General.* The following information should be displayed on markings and placards on the appropriate parts of the airplane. Markings and placards should be such that they cannot be easily disfigured or obscured.

.631 *Airspeed Markings.* The following airspeed limits as specified in section .610 should be marked on the airspeed indicator or on a placard posted adjacent to the indicator.

Maximum Airspeeds

Flaps extended	V_{fe}
Abrupt maneuvers	V_m
Never exceed	V_{ne}

.632 *Cockpit Control Markings.* Cockpit controls with the exception of the primary flight controls should be marked plainly as to their function and method of operation. All emergency controls should be colored red.

.633 *Powerplant Instrument Markings.* All required powerplant instruments should be marked with a red radial line at the maximum and minimum (if applicable) indications for safe operation. The normal operating ranges should be marked with a green arc which should not extend beyond the maximum and minimum limits for continuous operation. Takeoff and precautionary ranges should be marked with a yellow arc.

.634 *Fuel Control Markings.*

(a) Controls for fuel tank valves should be marked to indicate the position corresponding to each tank, the capacity of each tank, and the minimum fuel octane rating.

(b) When more than one fuel tank is provided, and if safe operation depends upon the use of tanks in a specific sequence, the fuel tank selector controls should be marked adjacent to or on the control to indicate to the flight personnel the order in which the tanks should be used.

.635 *Disposable Load Placards.* Each cargo compartment, disposable load installation (hoppers and spray tanks), and ballast location should bear a placard which states the maximum allowable weight of contents and, if applicable, any special limitations of contents due to loading criteria, etc. For type certification, the weights specified on these placards should be consistent with the maximum weight and center of gravity range established under sections .111 and .11. These placards may be changed in accordance with CAM 8.10-3.

.64 *Airplane Empty Weight and Balance Information.* The manufacturer should furnish with each airplane a weight and balance report showing the empty weight and center of gravity data as determined in accordance with sections .10 and .11.

.7 Identification Data.

In accordance with CAR 1.50, an identification plate should be securely attached to the structure in an accessible location where it is not likely to be defaced in normal service or destroyed in an accident.

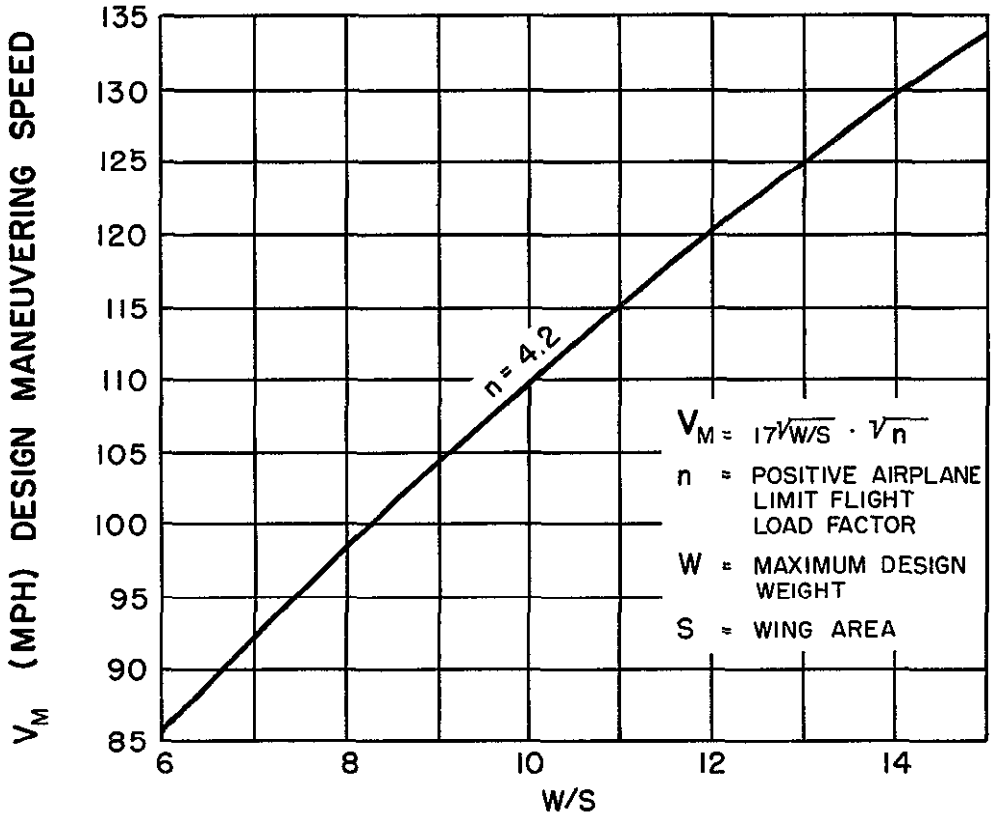

Figure .2100.—Minimum Design Maneuvering Speed

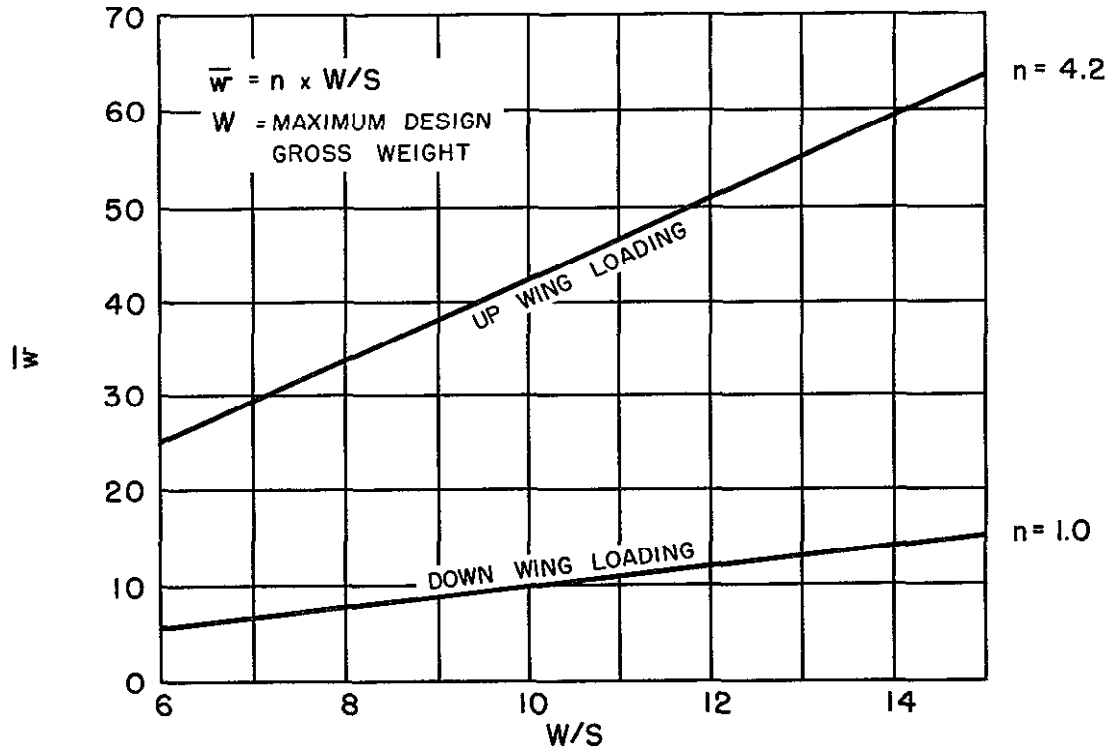

Figure .2120.—Design Limit Wing Loading

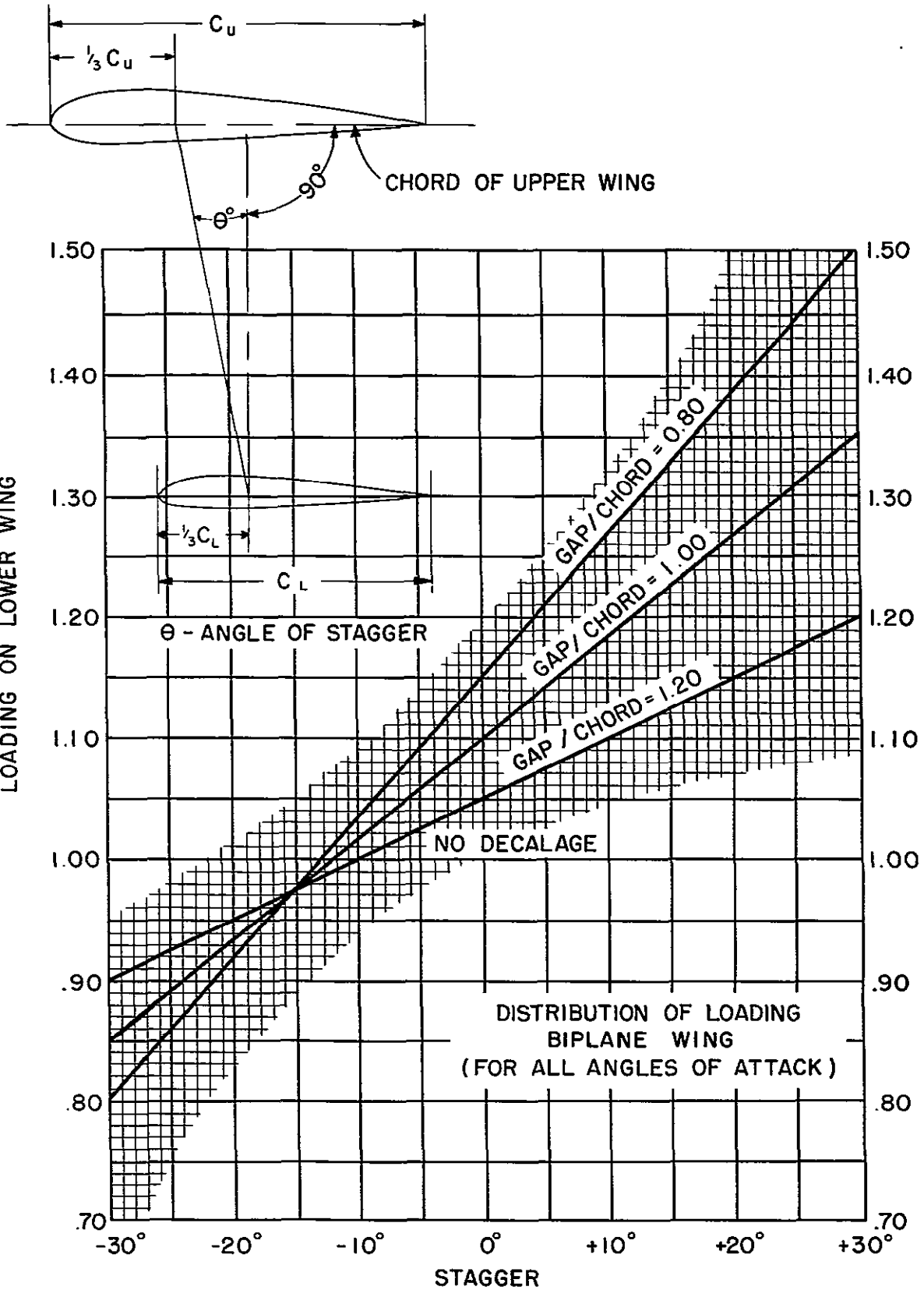

Figure .212(a).—Distribution of Loading Between Upper and Lower Biplane Wings

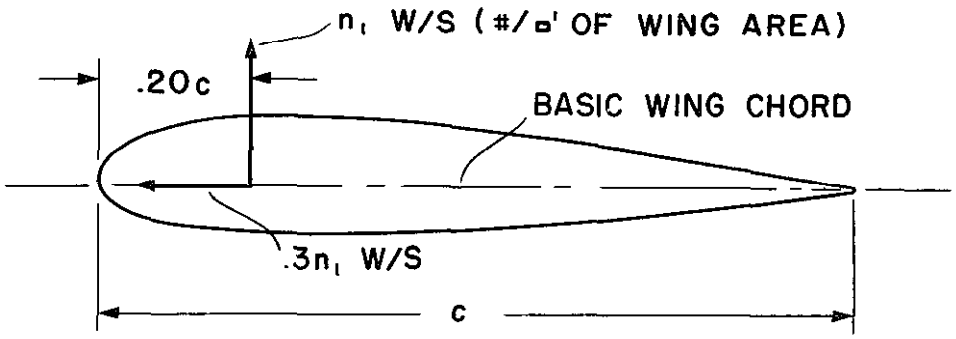

P. H. A. A.

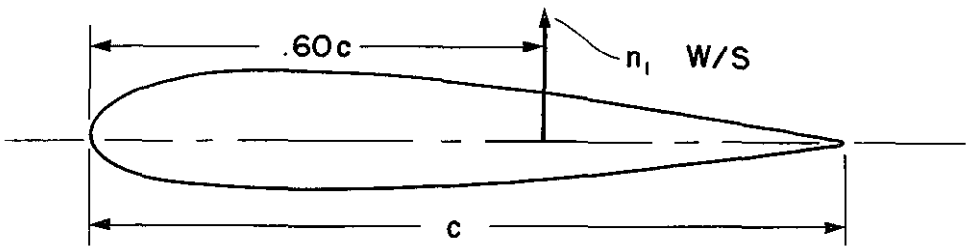

P. L. A. A.

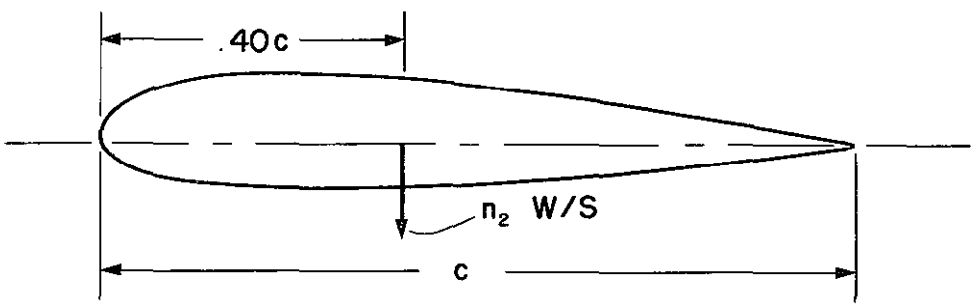

N. L. A. A.

WHERE :

n_1 = MAXIMUM POSITIVE FLIGHT LOAD FACTOR

n_2 = MAXIMUM NEGATIVE FLIGHT LOAD FACTOR

W/S = MAXIMUM GROSS WEIGHT WING LOADING

Figure .212(b). —Wing Flight Conditions

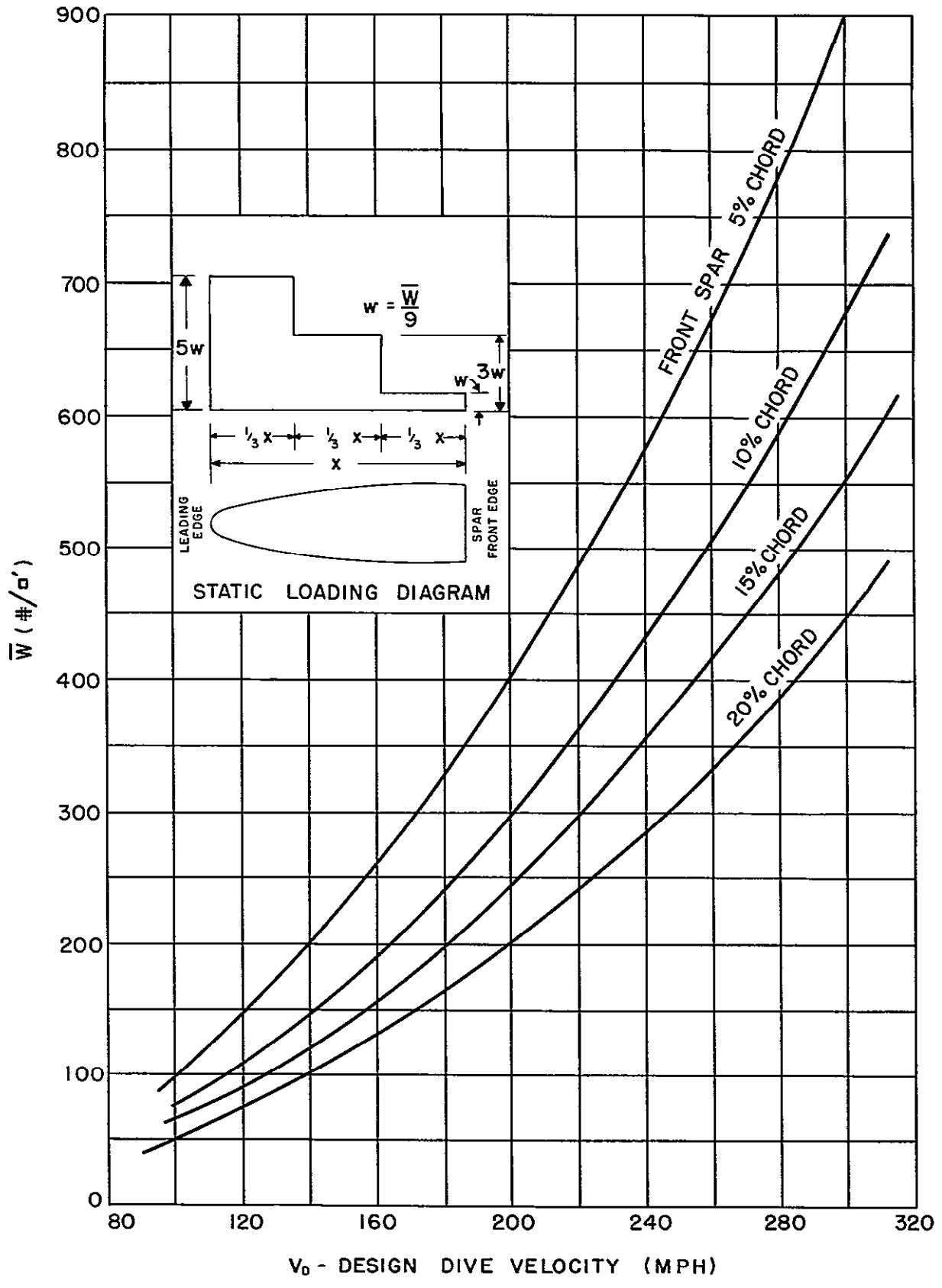

Figure .2123.—Limit Leading Edge Loadings

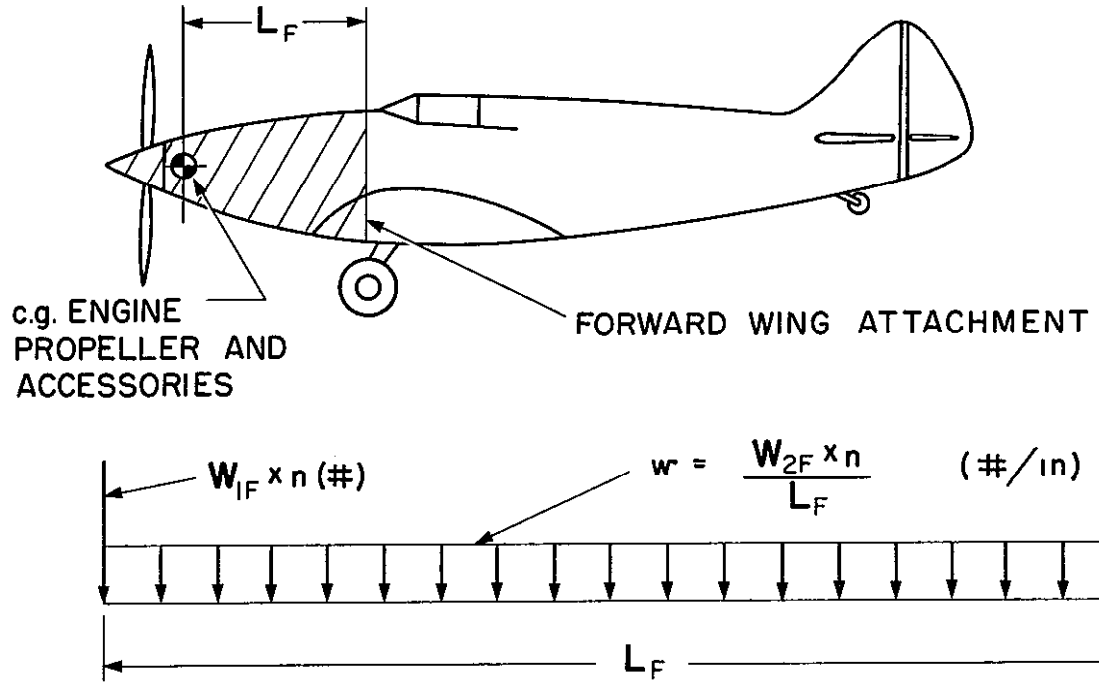

W_{IF} = WEIGHT OF ENGINE PROPELLER, AND ACCESSORIES ASSUMED CONCENTRATED AT THEIR c.g.

W_{2F} = WEIGHT OF ALL ITEMS IN FUSELAGE FORWARD OF FORWARD WING ATTACHMENT INCLUDING STRUCTURE WEIGHT BUT EXCLUDING ENGINE ITEMS (USE WEIGHT ITEMS FOR MOST FORWARD c.g.)

n = LOAD FACTOR FROM SECTION .2130

Figure .2130.—Typical Forward Fuselage Loading Diagram

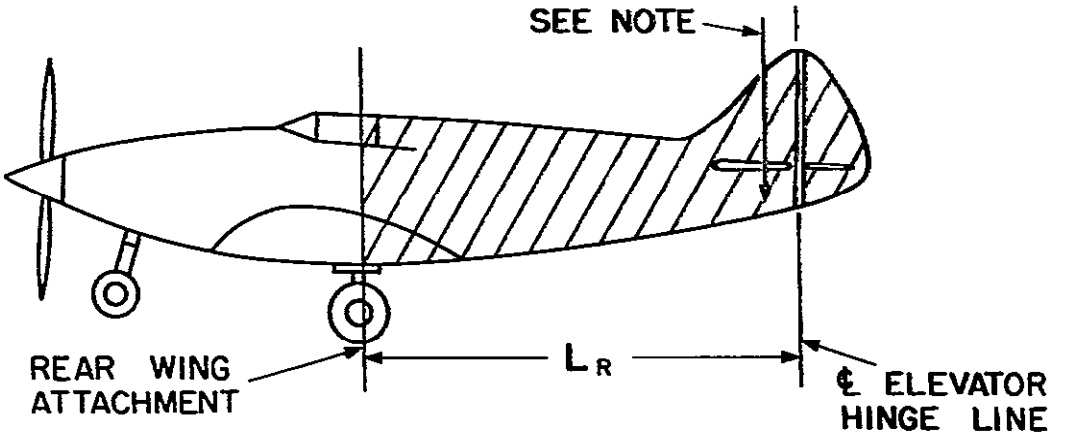

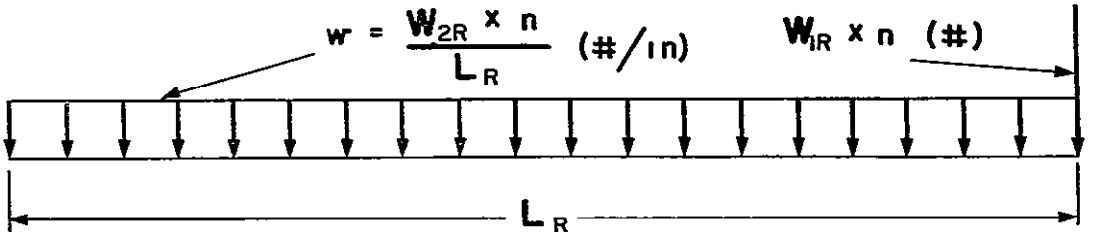

W_{IR} = WEIGHT OF HORIZONTAL AND VERTICAL TAILS

W_{2R} = WEIGHT OF ALL ITEMS IN FUSELAGE AFT OF REAR WING ATTACHMENT INCLUDING STRUCTURE WEIGHT BUT EXCLUDING TAIL (USE WEIGHT ITEMS FOR MOST AFT c.g.)

n = LOAD FACTOR FROM SECTION .2131

NOTE: FOR AFT FUSELAGE OVERALL DESIGN THE HORIZONTAL AND VERTICAL TAIL LOADS FROM SECTION .214 MAY BE ASSUMED CONCENTRATED AT 50% OF THE TAIL SURFACE CHORD.

Figure .2131.—Typical Aft Fuselage Loading Diagram

TABLE .214

AVERAGE LIMIT CONTROL SURFACE LOADINGS

SURFACE	DIRECTION OF LOADING	MAGNITUDE OF LOADING	CHORDWISE DISTRIBUTION
HORIZONTAL TAIL	(a) UP AND DOWN	* FIGURE .214 CURVE (3)	(A) 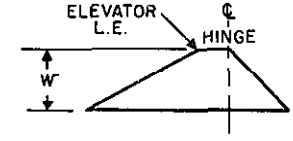
	(b) DOWN	FIGURE .214 CURVE (3) **	(B) 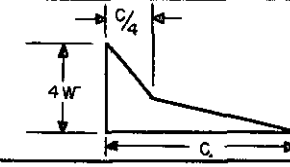
	(c) UP	.60 x DOWN LOAD (b) **	
VERTICAL TAIL	(a) RIGHT OR LEFT	FIGURE .214 CURVE (3) *	SAME AS (A) ABOVE
	(b) RIGHT OR LEFT	FIGURE .214 CURVE (2) **	SAME AS (B) ABOVE
AILERON	(a) UP AND DOWN	* FIGURE .214 CURVE (4)	(C) 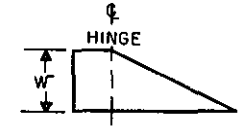
WING FLAP	(a) UP	FIGURE .214 CURVE (2)	(D) 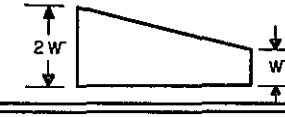
TRIM TAB	(a) UP AND DOWN	FIGURE .214-CURVE (2) *	SAME AS (D) ABOVE

NOTE - If the design maneuvering speed, V_M, selected for design is different from the value specified in figure .2100, the values marked * shall be multiplied by $\left[\frac{V_M \text{ selected}}{V_M \text{ per fig. .2100}}\right]^2$ and values marked ** shall be multiplied by $\left[\frac{V_M \text{ selected}}{V_M \text{ per fig. .2100}}\right]$.

(Rev. 1/20/56)

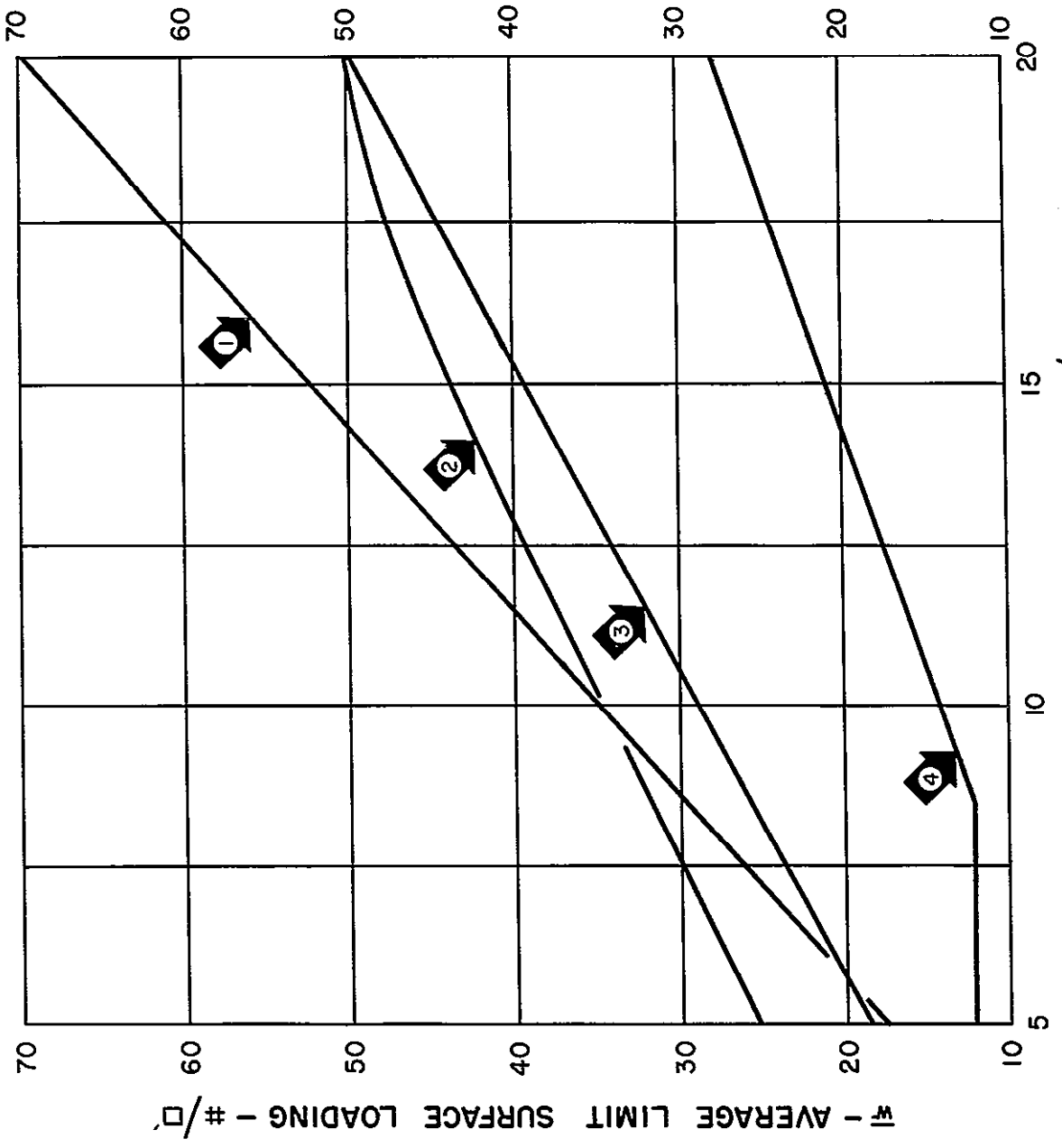

Figure .214.—Average Limit Control Surface Loadings

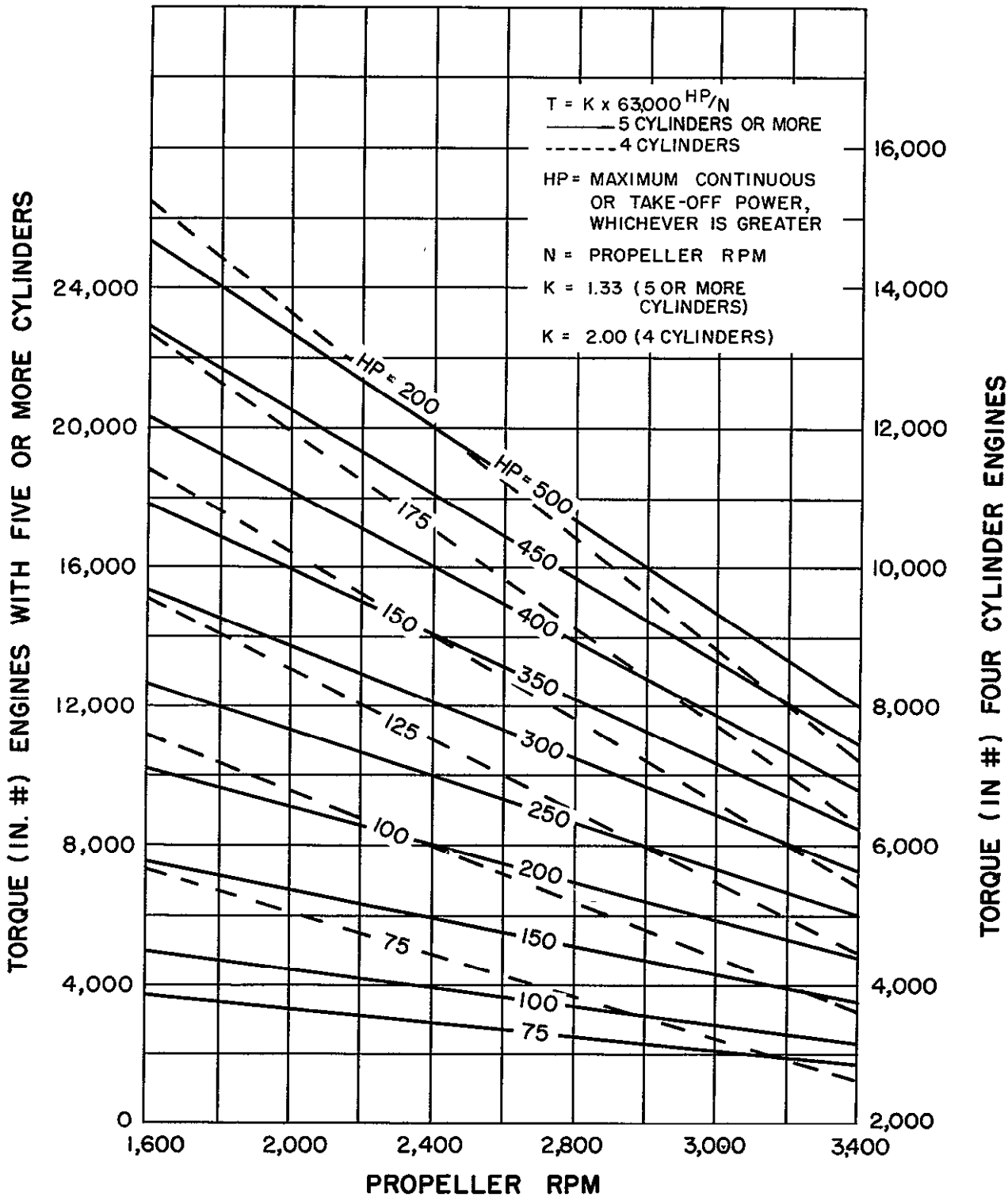

Figure .2170.—Engine Torque vs. R.P.M.

397956 O - 56 - 9

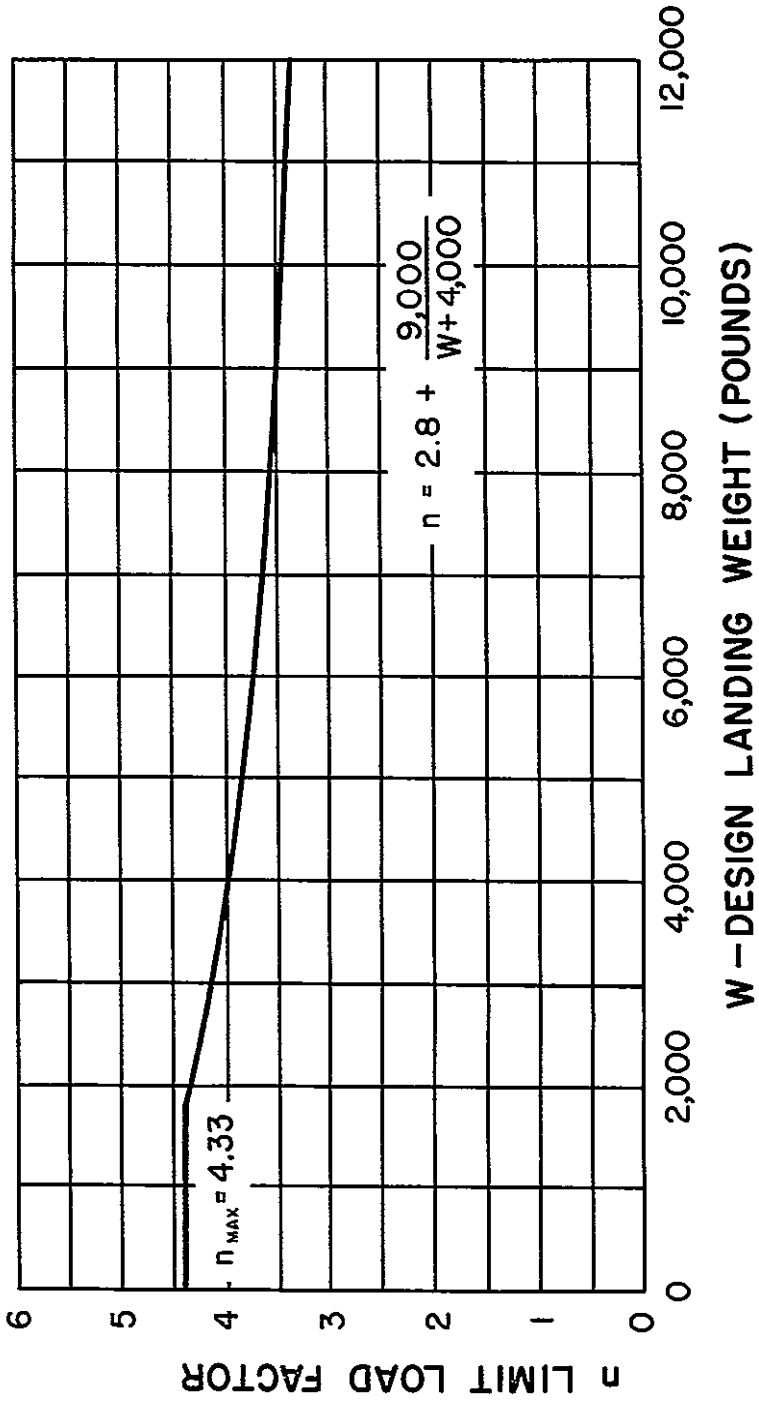

Figure .222.—Limit Load Factor For Landing Conditions

Table .2230: MAIN LANDING GEAR LIMIT LOADS (TAIL WHEEL TYPE)

Condition	1 3-point landing vertical reactions	2 Level landing with inclined reactions	3 Level landing with side load
Attitude.....	See Figure .2230(a)	See Figure .2230(b)	See Figure .2230(c)
Vertical component on both wheels	$\frac{b}{d}$ nW	nW	1.33W
Fore and aft component, both wheels.....	0	0.33W	0
Lateral component.....	0	0	0.5W acting inboard one side; 0.33W acting outboard on the other.
Shock absorber extension (hydraulic shock absorb.).....	See Note (1)	See Note (1)	Static deflection of Oleo.
Shock absorber deflection (rubber or spring shock absorber).....	100%	100%	100%.
Tire deflection, note (2).....	Static	Static	Static.
Loads applied at.....	Center of wheels	Center of wheels	Ground contact point.

Note (1): For the purpose of design, the maximum load factor should be assumed to occur throughout the full extent of the shock absorber stroke, from 25% deflection to 100% deflection, and the load factor should be used with whatever shock absorber extension is most critical for each element of the landing gear. The load factor may be obtained from Fig. .222.

Note (2): Static deflection of tires may be obtained from the "Tire and Rim Association Yearbook."

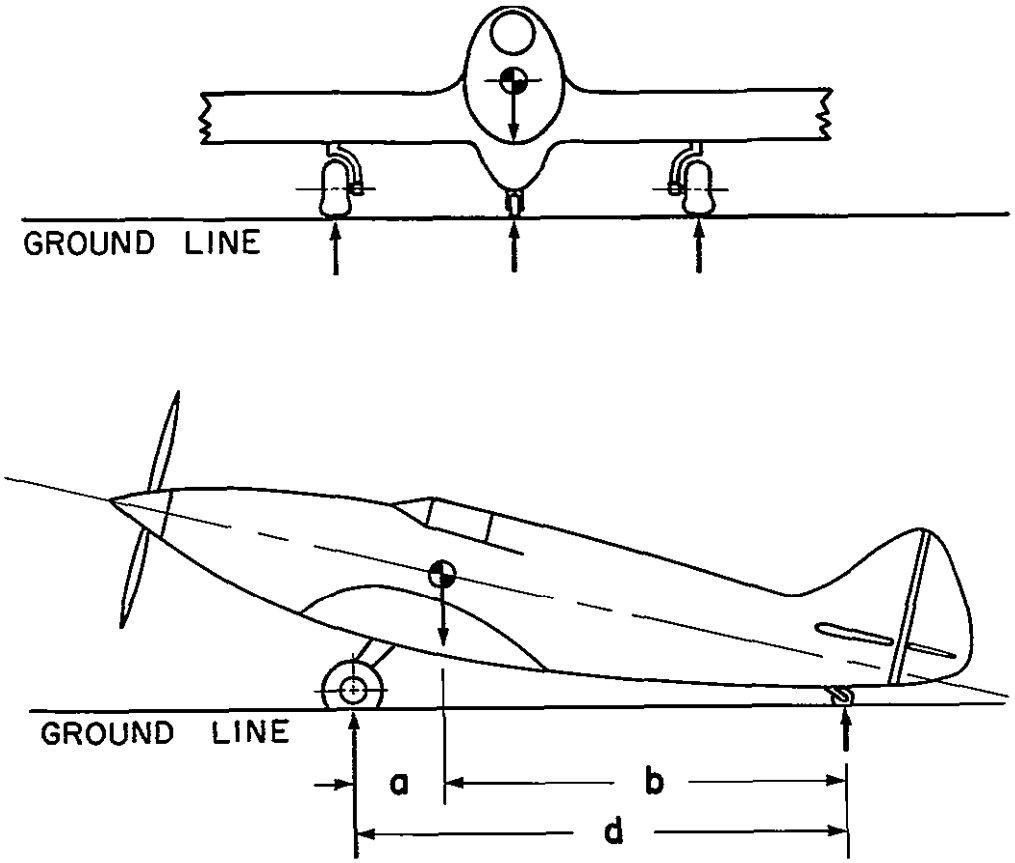

Figure .2230(a).—Three-Point Landing Condition With Vertical Reactions (Tail Wheel Type)

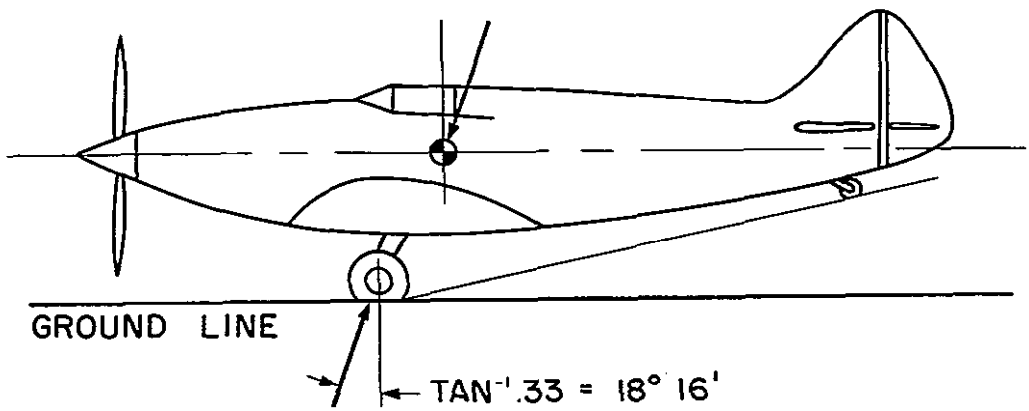

Figure .2230(b).—Level Landing With Inclined Reactions (Tail Wheel Type)

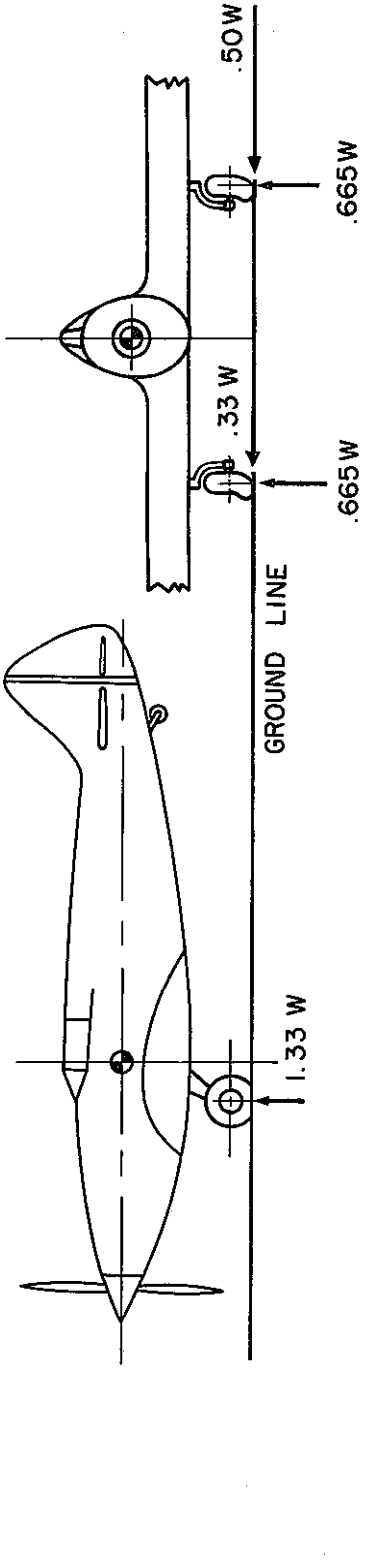

Figure .2230(c).—Level Landing With Side Load (Tail Wheel Type)

Table .2231: TAIL WHEEL LIMIT LOADS

Condition	1 3-point landing vertical reactions	2 Obstruction load condition	3 Side load-free swiveling wheel	4 Side load-locked wheel or skid
Attitude.....	See Figure .2231 (a), Note (2).	See Figure .2231(b), Note (2).	See Figure .2231(c), Note (2).	See Figure .2231(d), Note (3).
Vertical component (2)....	$\frac{a}{d}$ nW, Figure .2230(a)	$0.707\frac{a}{d}$nW, Figure .2230(a)	$\frac{aW}{d}$	$\frac{aW}{d}$
Lateral component (2).....	0	0	$\frac{aW}{d}$	$\frac{aW}{d}$
Fore and aft component....	0	$0.707\ \frac{aW}{d}$	0	0
Shock absorber extension (hydraulic shock absorber).....	Note (1)	Note (1)		
Shock absorber deflection (rubber or spring shock absorber).....	100 percent	100 percent	100 percent	100 percent
Tire deflection.....	Static	Static	Static	Static
Load applied at.....	Center of wheel	Center of wheel	Center of wheel	Ground contact point.

Note (1). For the purpose of design, the maximum load factor will be assumed to occur throughout the full extent of the shock absorber stroke, from 25% deflection to 100% deflection, and the load factor should be used with whatever shock absorber extension is most critical for each element of the landing gear.

Note (2). The maximum value of $\frac{a}{d}$ should be used.

Note (3). Required only when locking device or skid is used.

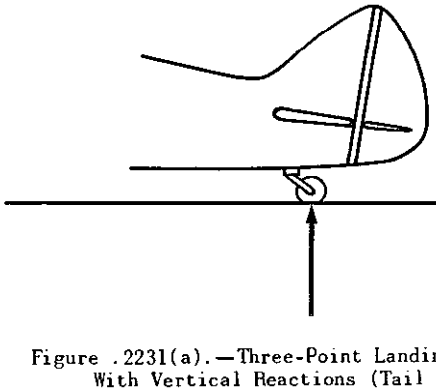

Figure .2231(a).—Three-Point Landing Condition With Vertical Reactions (Tail Wheel)

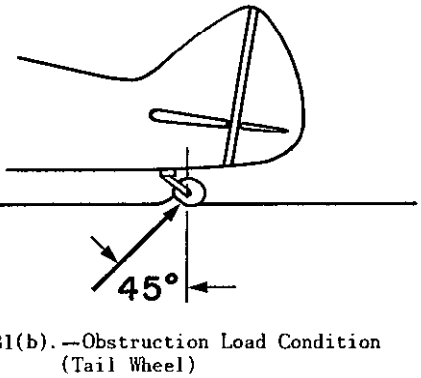

Figure .2231(b).—Obstruction Load Condition (Tail Wheel)

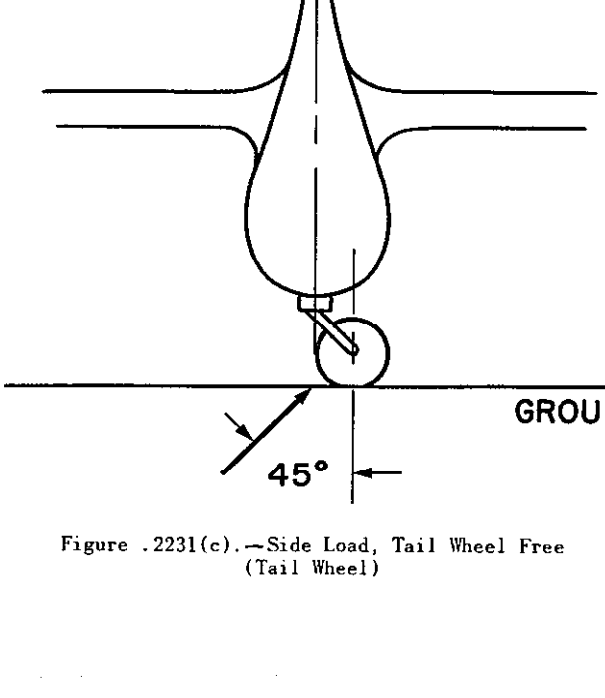

Figure .2231(c).—Side Load, Tail Wheel Free (Tail Wheel)

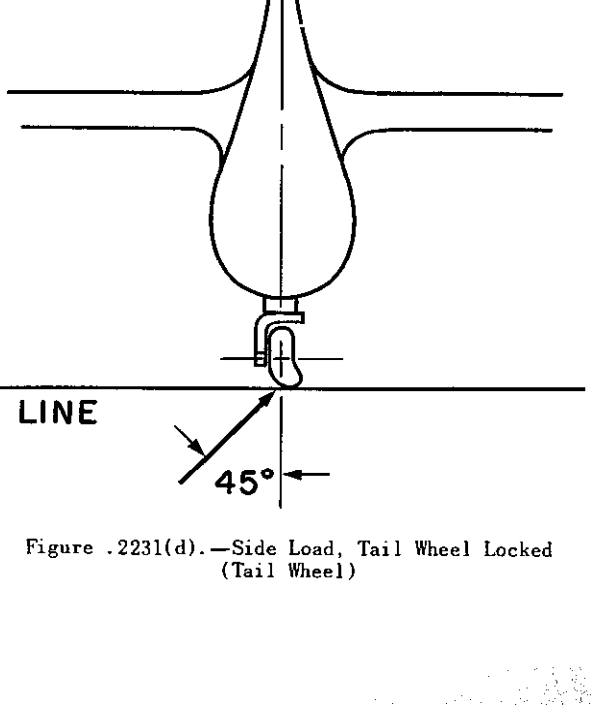

Figure .2231(d).—Side Load, Tail Wheel Locked (Tail Wheel)

Table .2232: NOSE WHEEL TYPE LANDING GEAR LIMIT LOADS

Condition	1 3-wheel landing with inclined reactions Note (2)	2 2-wheel landing with vertical reactions, nose up	3 2-wheel landing with inclined reactions, nose down	4 Side drift landing	5 Bending in nose strut
Attitude.....	See Figure .2232(b)	See Figure .2232(c)	See Figure .2232(d)	See Figure .2232(e)	See Figure .2232(f)
Shock absorber extension (hydraulic shock absorber)....	Note (1)	Note (1)	Note (1)	100 percent	Note (1)
Shock absorber deflection (rubber or spring shock absorber) Note (1).....	100 percent	100 percent	100 percent	100 percent	100 percent
Tire deflection.....	Static	Static	Static	Static	Static
Main wheel loads (both wheels) Vr.....	$n\frac{Wb'}{d'}$	nW	nW	1.33W	
Main wheel loads (both wheels) Dr.....	0.33Vr	0	0.33Vr	0	
Main wheel loads (both wheels) Sr	0	0	0	0.5W acting inboard on one wheel. 0.33W acting outboard on other wheel.	
Nose wheel loads Vf.....	$n\frac{Wa'}{d'}$	0	0	0	$2.25\frac{Wa}{d}$
Nose wheel loads Df.....	0.33Vf	0	0	0	Aft 0.8Vf Note (3). Forward 0.4Vf
Nose wheel loads Sf.....	0	0	0	$0.5n\frac{Wa}{d}$	0.7Vf
Loads applied at.....	Center of wheels.	Center of wheels.	Center of wheels.	Ground contact point.	Center of wheel.

Note (1). For the purpose of design, the maximum load factor should be assumed to occur throughout the full extent of the shock absorber stroke from 25% deflection to 100% deflection and the load factor may be used with whatever shock absorber extension is most critical for each element of the landing gear. The load factor may be obtained from Figure .222.

Note (2). The most forward center of gravity position should be investigated. Direction of the components is taken with respect to the ground line unless otherwise noted.

Note (3). The specified forward, aft, and side components may be assumed to act separately but should be combined with the specified vertical load in each case.

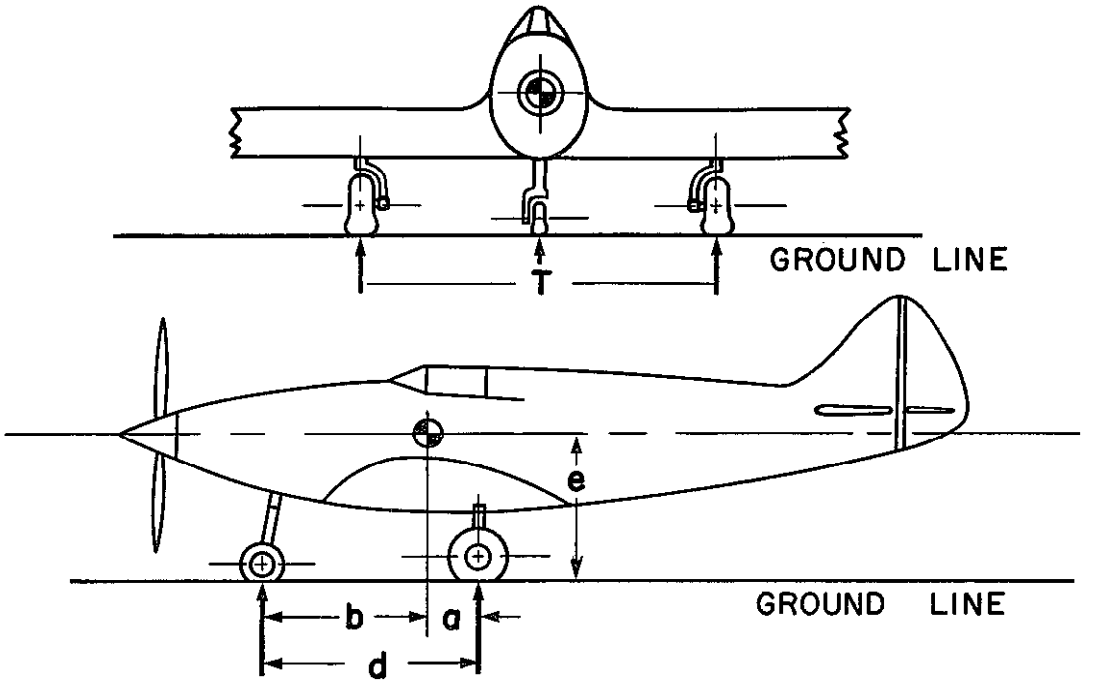

Figure .2232(a).—Essential Dimensions of Tricycle Alighting Gear

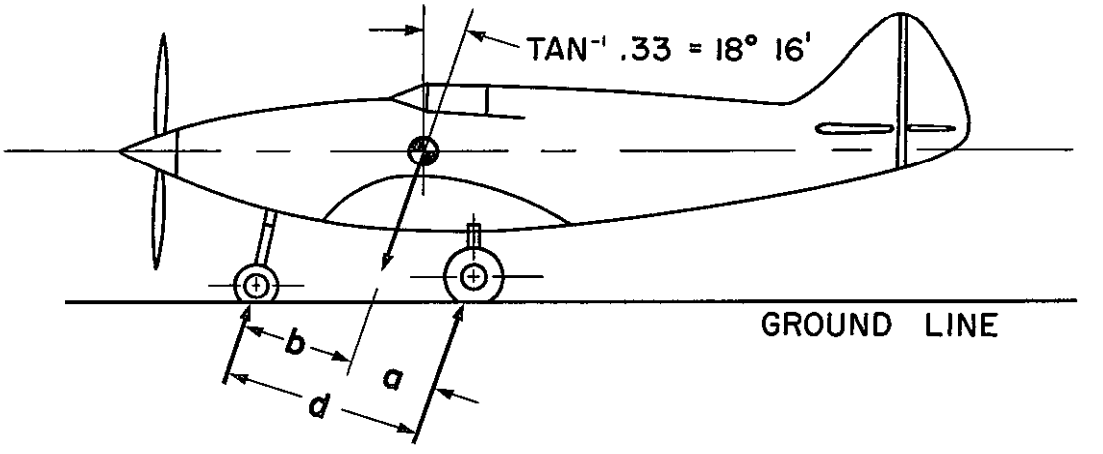

Figure .2232(b).—Three-Wheel Landing With Inclined Reactions (Tricycle Gear)

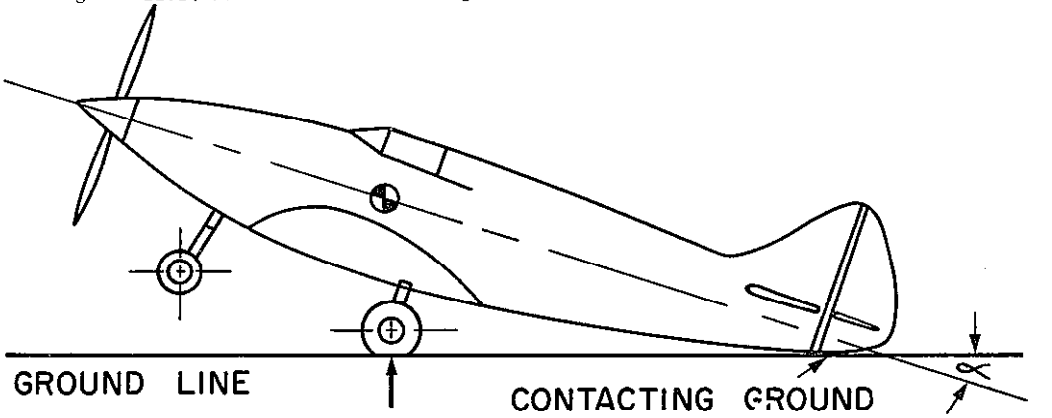

NOTE: IF ANGLE ∝ GIVES WING ANGLE OF ATTACK BEYOND STALL

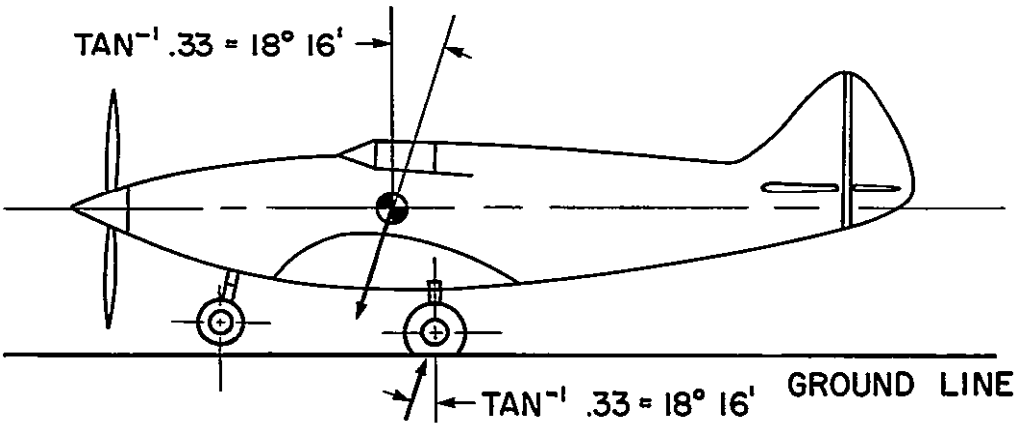

Figure .2232(d).—Two-Wheel Landing With Inclined Reactions—Nose Down. (Tricycle Gear)

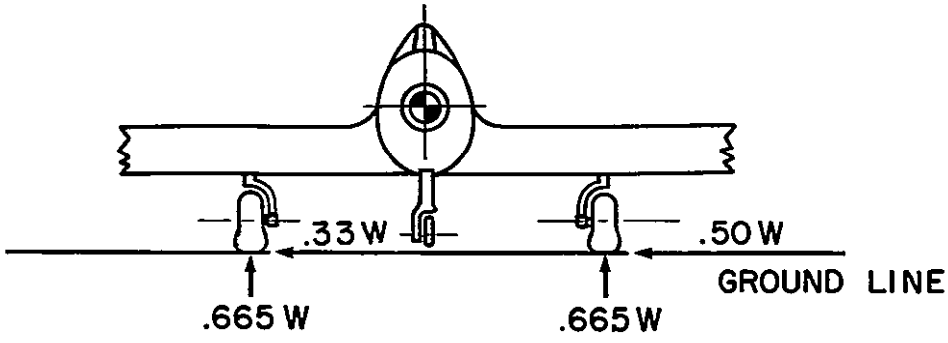

Figure .2232(e).—Side Drift Landing (Tricycle Gear)

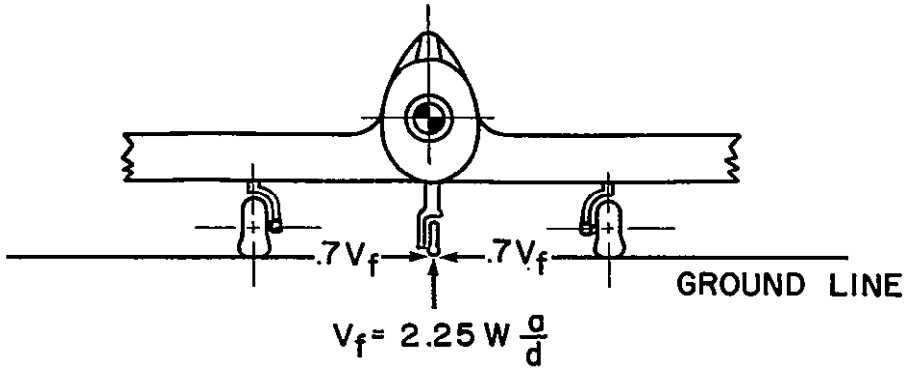

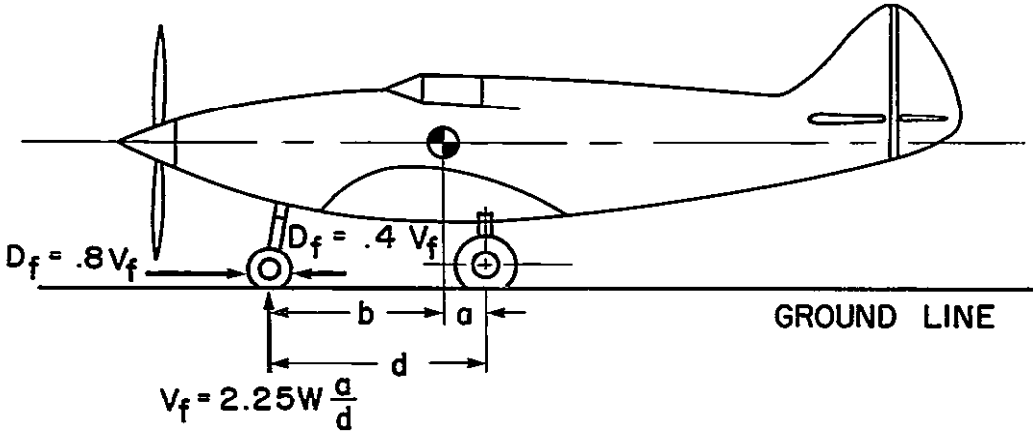

Figure .2232(f).—Bending in Nose Strut (Tricycle Gear)

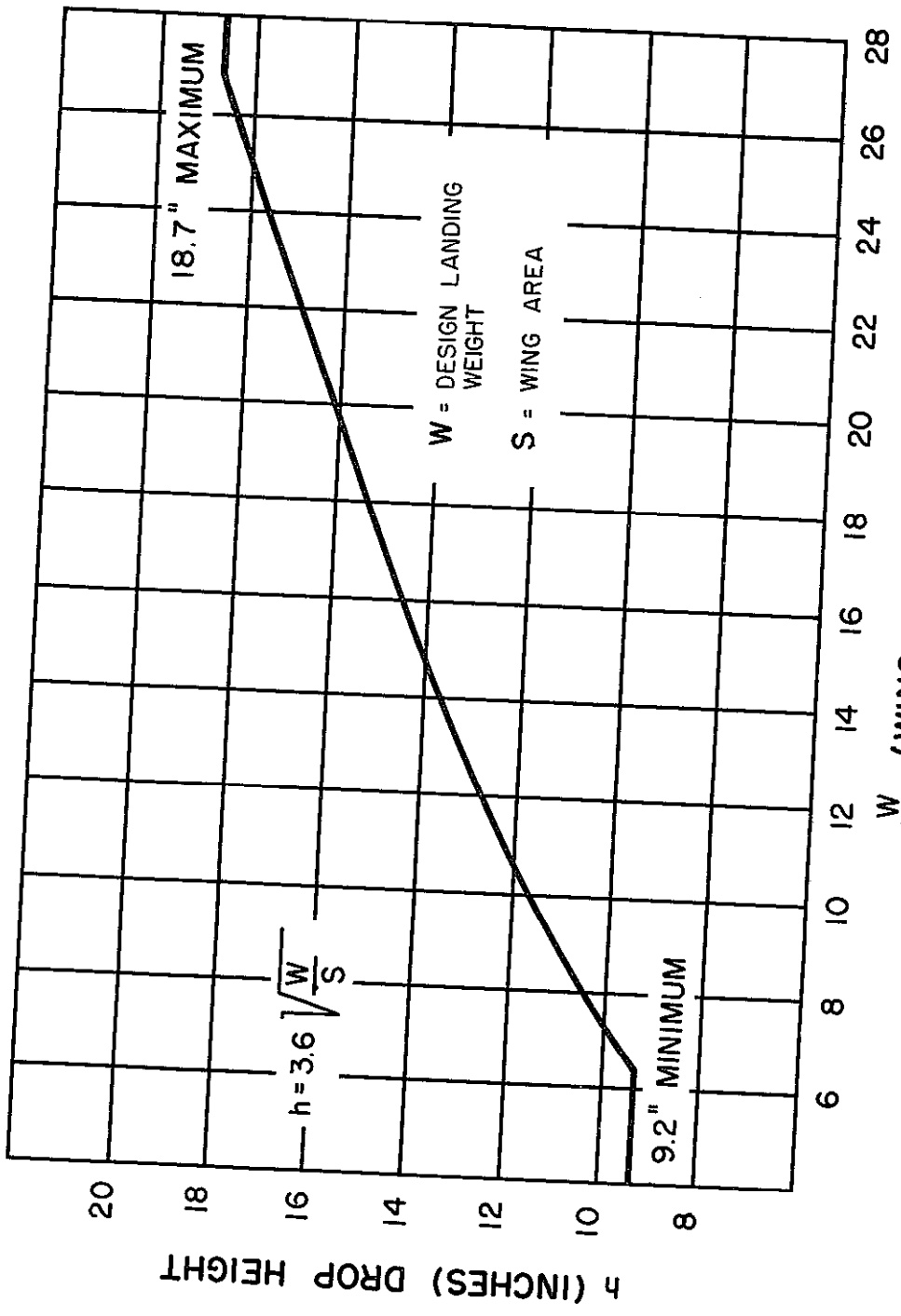

Figure .224.—Minimum Free Drop Height

DOT LIBRARY
10A SECTION
800 INDEPENDENCE AVE
WASHINGTON, DC 20591

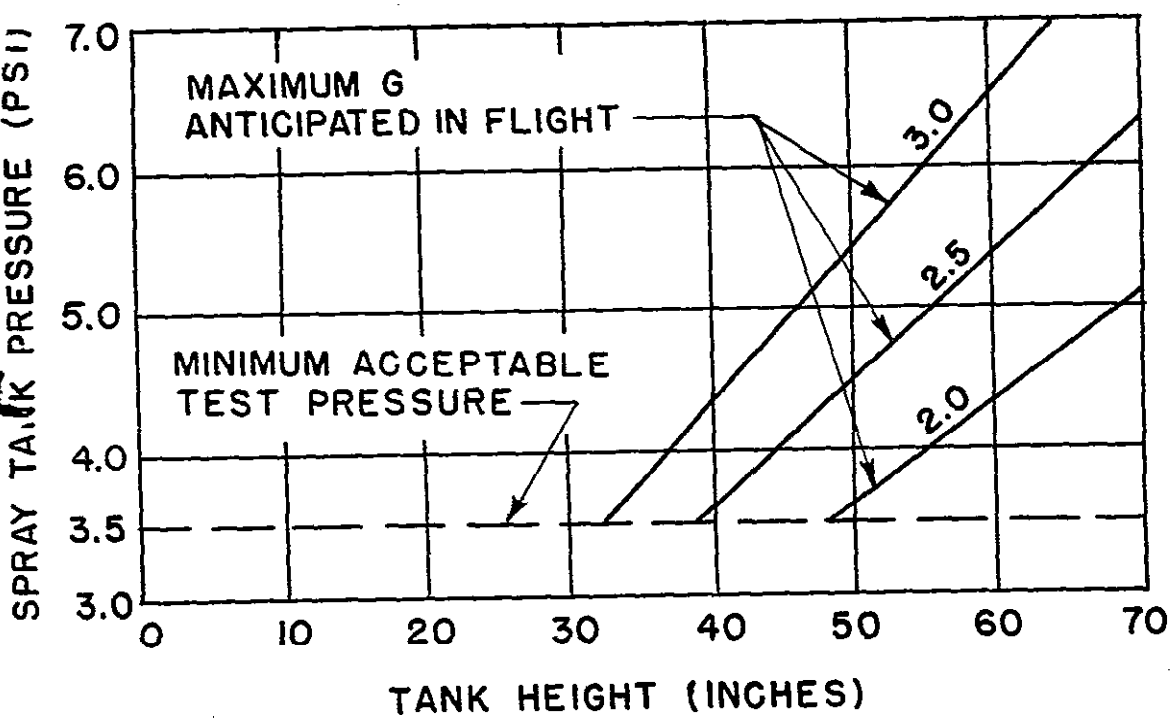

SPRAY TANK PRESSURE
FIGURE .3511

DOT LIBRARY

U. S. GOVERNMENT PRINTING OFFICE: 1956 O—397956